NHBH-0056(333)E

Dist	COUNTY	ROUTE	POST MILES TOTAL PROJECT	SHEET No.	TOTAL SHEETS
03	Yol	5	0.8/2.5	1	30

STATE OF CALIFORNIA
DEPARTMENT OF TRANSPORTATION

PROJECT PLANS FOR CONSTRUCTION ON
STATE HIGHWAY

IN YOLO COUNTY
ON ROUTE 5 FROM 0.8 MILE WEST OF SACRAMENTO/YOLO COUNTY LINE
TO 5.8 MILES EAST OF ROUTE 5/113 SEPARATION

TO BE SUPPLEMENTED BY STANDARD PLANS DATED MAY 2006

INDEX OF PLANS

SHEET No.	DESCRIPTION
1	TITLE AND LOCATION MAP
2	CONSTRUCTION DETAILS
3	TRAFFIC HANDLING DETAILS
4	SUMMARY OF QUANTITIES
5	MODIFY ROADSIDE WEATHER INFORMATION SYSTEM
6-16	REVISED STANDARD PLANS
STRUCTURE PLANS	
17-30	YOLO BYPASS DECK OVERLAY AND JOINT SEAL REPLACEMENT Br No. 22-0124R/L

THE STANDARD PLANS LIST APPLICABLE TO THIS CONTRACT IS INCLUDED IN THE NOTICE TO BIDDERS AND SPECIAL PROVISIONS BOOK.

LOCATION MAP

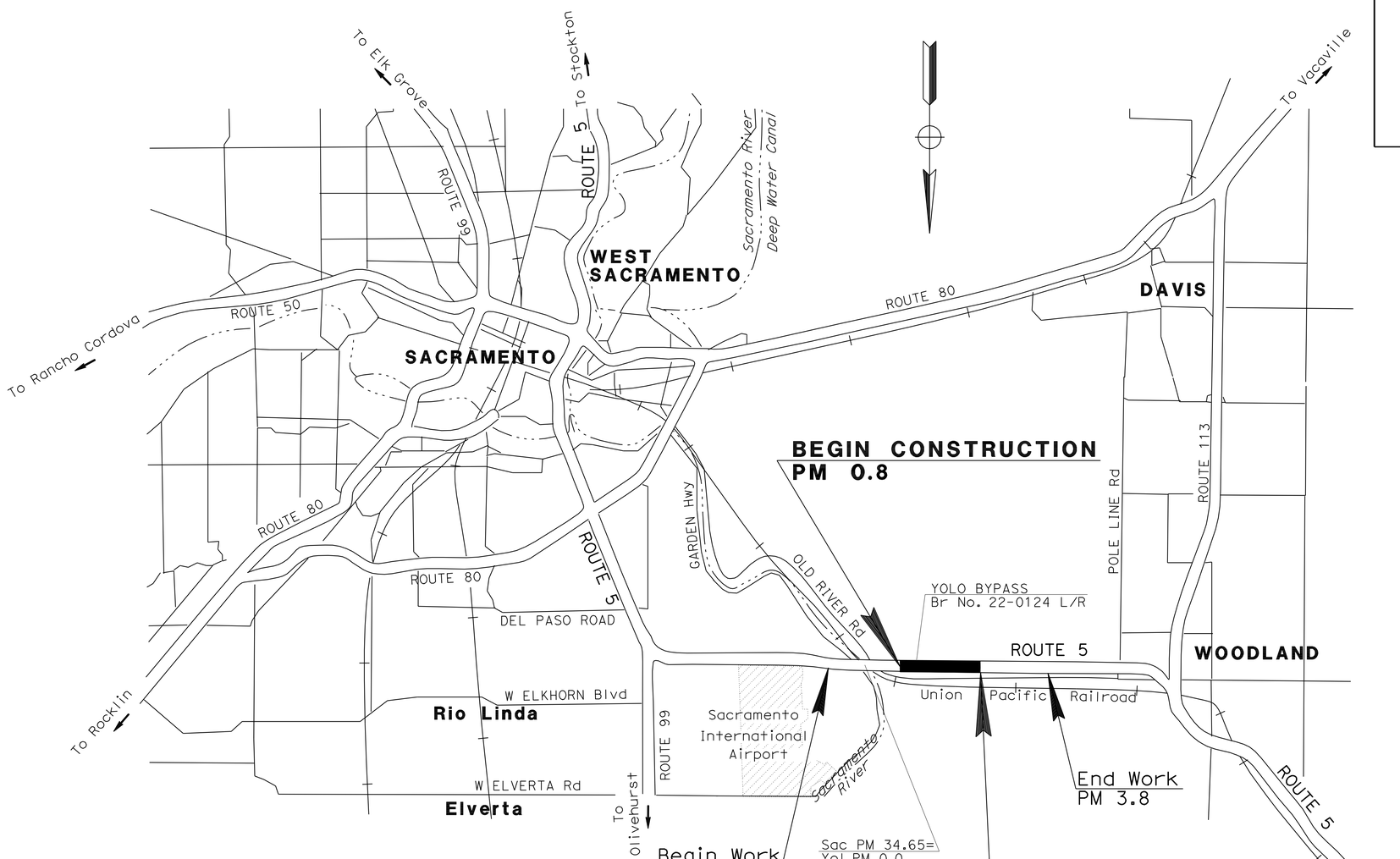

NO SCALE

THE CONTRACTOR SHALL POSSESS THE CLASS (OR CLASSES) OF LICENSE AS SPECIFIED IN THE "NOTICE TO BIDDERS."

PROJECT MANAGER M. MILLARD

DESIGN ENGINEER J. ELDER

PROJECT ENGINEER REGISTERED CIVIL ENGINEER — DATE 3-22-10

June 21, 2010
PLANS APPROVAL DATE

REGISTERED PROFESSIONAL ENGINEER SAEED AAZAMI No. 67948 Exp. 6-30-11 CIVIL STATE OF CALIFORNIA

THE STATE OF CALIFORNIA OR ITS OFFICERS OR AGENTS SHALL NOT BE RESPONSIBLE FOR THE ACCURACY OR COMPLETENESS OF SCANNED COPIES OF THIS PLAN SHEET.

CONTRACT No.	03-3E0704
PROJECT ID	0300000470

LAST REVISION 00-00-00 — DATE PLOTTED => 03-AUG-2010 TIME PLOTTED => 14:01

Dist	COUNTY	ROUTE	POST MILES TOTAL PROJECT	SHEET No.	TOTAL SHEETS
03	Yol	5	0.8/2.5	2	30

REGISTERED CIVIL ENGINEER 3-22-10 DATE

6-21-10
PLANS APPROVAL DATE

REGISTERED PROFESSIONAL ENGINEER SAEED AAZAMI No. 67948 Exp. 6-30-11 CIVIL STATE OF CALIFORNIA

THE STATE OF CALIFORNIA OR ITS OFFICERS OR AGENTS SHALL NOT BE RESPONSIBLE FOR THE ACCURACY OR COMPLETENESS OF SCANNED COPIES OF THIS PLAN SHEET.

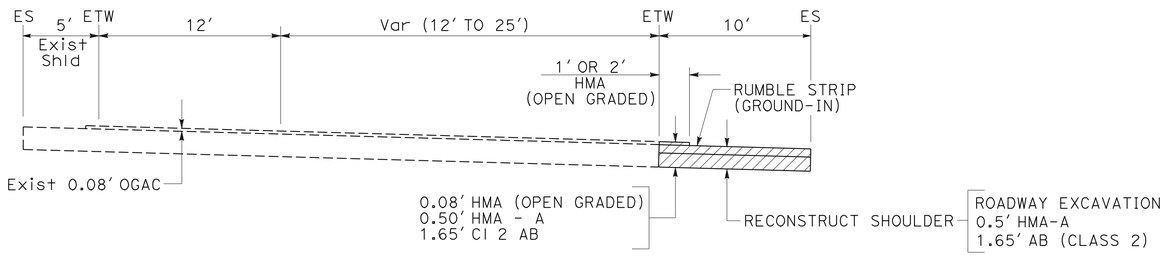

SECTION A-A
RECONSTRUCT OUTSIDE SHOULDER

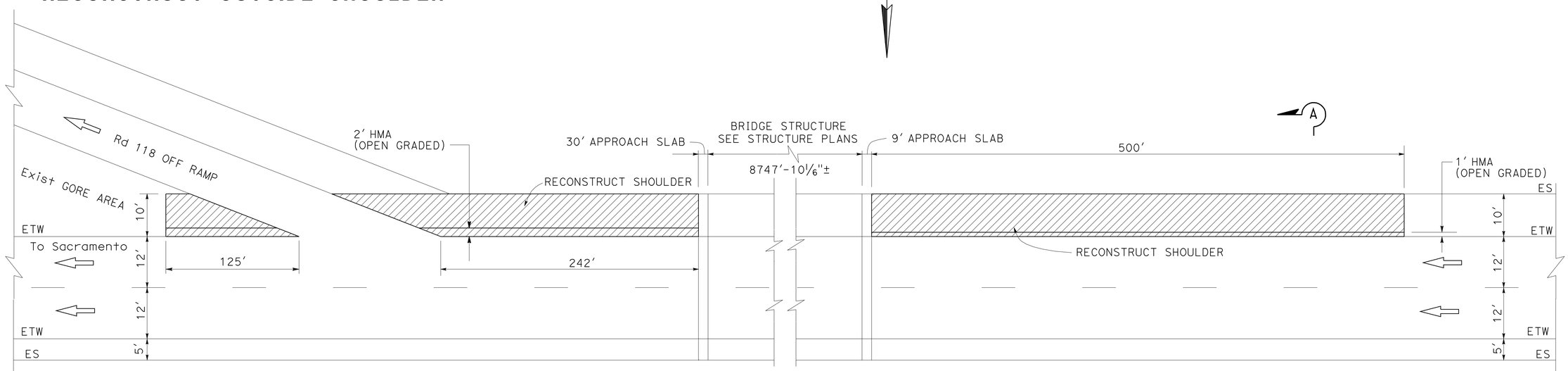

RECONSTRUCT OUTSIDE SHOULDER SOUTHBOUND

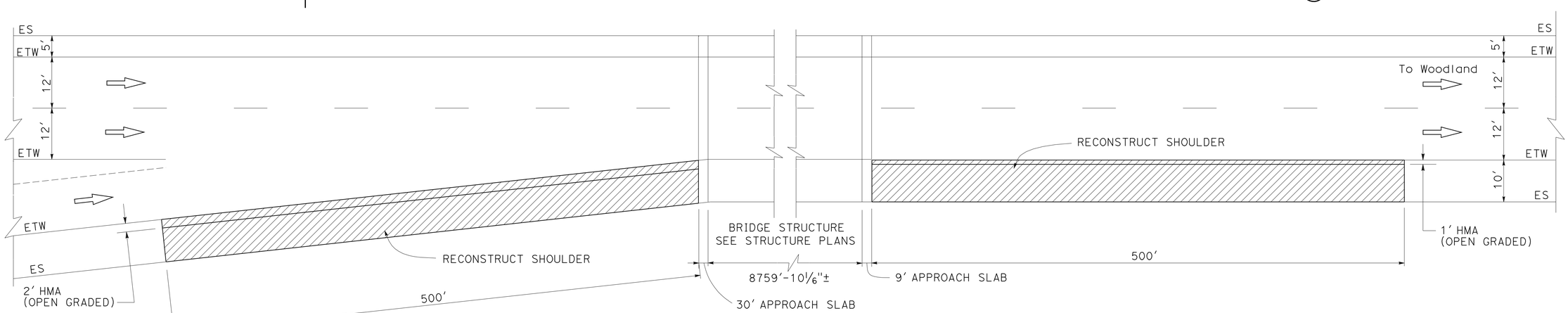

RECONSTRUCT OUTSIDE SHOULDER NORTHBOUND

CONSTRUCTION DETAILS
NO SCALE

C-1

STATE OF CALIFORNIA - DEPARTMENT OF TRANSPORTATION
NORTH REGION
OFFICE OF DESIGN SOUTH
DESIGN BRANCH S-11

FUNCTIONAL SUPERVISOR: JIM ELDER
CALCULATED-DESIGNED BY: SAEED AAZAMI
CHECKED BY: SAEED AAZAMI
REVISED BY
DATE REVISED

LAST REVISION 00-00-00
DATE PLOTTED => 24-JUN-2010
TIME PLOTTED => 08:48

Dist	COUNTY	ROUTE	POST MILES TOTAL PROJECT	SHEET No.	TOTAL SHEETS
03	Yol	5	0.8/2.5	3	30

REGISTERED CIVIL ENGINEER 3-22-10 DATE

6-21-10
PLANS APPROVAL DATE

REGISTERED PROFESSIONAL ENGINEER SAEED AAZAMI No. 67948 Exp. 6-30-11 CIVIL STATE OF CALIFORNIA

THE STATE OF CALIFORNIA OR ITS OFFICERS OR AGENTS SHALL NOT BE RESPONSIBLE FOR THE ACCURACY OR COMPLETENESS OF SCANNED COPIES OF THIS PLAN SHEET.

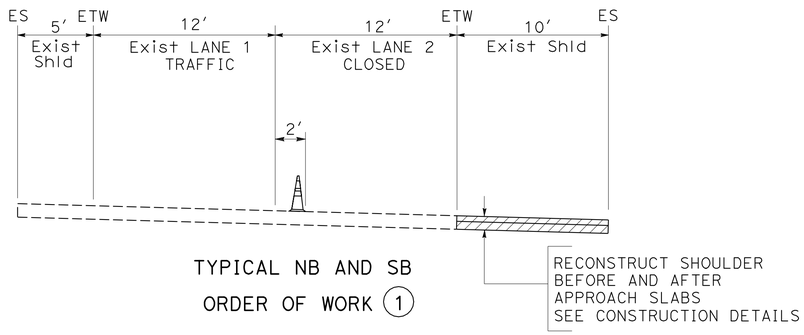

TYPICAL NB AND SB
ORDER OF WORK (1)

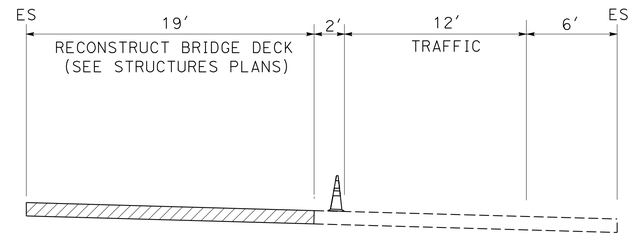

TYPICAL NB AND SB
ORDER OF WORK (2)

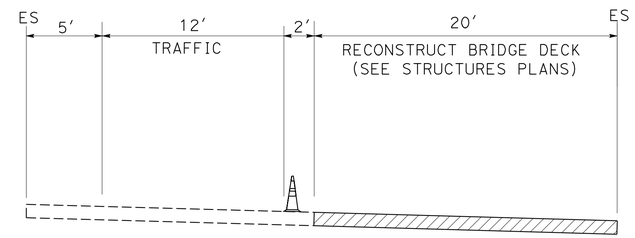

TYPICAL NB AND SB
ORDER OF WORK (3)

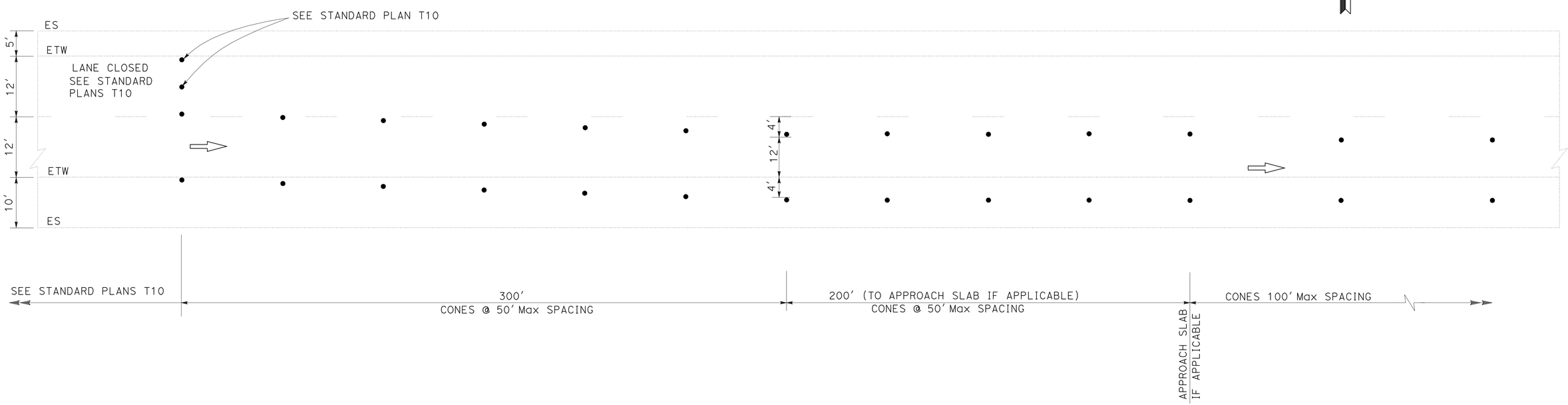

TYPICAL LANE CLOSURE WITH PARTIAL SHOULDER USE

TRAFFIC HANDLING DETAILS

NO SCALE

THIS PLAN ACCURATE FOR TRAFFIC HANDLING WORK ONLY

THD-1

STATE OF CALIFORNIA - DEPARTMENT OF TRANSPORTATION
NORTH REGION
OFFICE OF DESIGN SOUTH
DESIGN BRANCH S-11

FUNCTIONAL SUPERVISOR: JIM ELDER

CALCULATED-DESIGNED BY: SAEED AAZAMI
CHECKED BY: SAEED AAZAMI
REVISED BY
DATE REVISED

LAST REVISION 00-00-00
DATE PLOTTED => 24-JUN-2010
TIME PLOTTED => 08:48

Dist	COUNTY	ROUTE	POST MILES TOTAL PROJECT	SHEET No.	TOTAL SHEETS
03	Yol	5	0.8/2.5	4	30

REGISTERED CIVIL ENGINEER 3-22-10 DATE

6-21-10
PLANS APPROVAL DATE

REGISTERED PROFESSIONAL ENGINEER
SAEED AAZAMI
No. 67948
Exp. 6-30-11
CIVIL
STATE OF CALIFORNIA

THE STATE OF CALIFORNIA OR ITS OFFICERS OR AGENTS SHALL NOT BE RESPONSIBLE FOR THE ACCURACY OR COMPLETENESS OF SCANNED COPIES OF THIS PLAN SHEET.

ROADWAY QUANTITIES

LOCATION	ROADWAY EXCAVATION	HOT MIX ASPHALT (TYPE A)	AB (CLASS 2)	* TACK COAT	* HMA (OPEN GRADED)	RUMBLE STRIP (GROUND-IN)
	CY	TON	CY	TON	TON	STA
NB BRIDGE APPROACH	399	200	306	0.6	6.3	5
NB BRIDGE DEPARTURE	399	200	306	0.6	3.2	5
SB BRIDGE APPROACH	399	200	306	0.6	3.2	5
SB BRIDGE DEPARTURE	293	147	225	0.4	4.6	4
TOTAL	1490	747	1143	2.2	17.3	19

* FOR ADDITIONAL QUANTITY SEE STRUCTURE PLANS

WATER POLLUTION AND EROSION CONTROL

TEMPORARY CONCRETE WASHOUT FACILITY	TEMPORARY CONSTRUCTION ENTRANCE	TEMPORARY FIBER ROLL	TEMPORARY SILT FENCE	EROSION CONTROL (HYDROSEED)
EA	EA	LF	LF	ACRE
1	1	1700	1700	0.91

PAVEMENT MARKERS AND TRAFFIC LINES

LOCATION	4" THERMOPLASTIC TRAFFIC STRIPE (BROKEN 36-12)		8" THERMOPLASTIC TRAFFIC STRIPE	4" THERMOPLASTIC TRAFFIC STRIPE (SPRAYABLE)		PAVEMENT MARKERS RETRO-REFLECTIVE		
	DETAIL No.		DETAIL No.	DETAIL No.				
	12	14A	36	25	27B	TYPE C	TYPE G	TYPE H
	LF	LF	LF	LF	LF	EA	EA	EA
NORTHBOUND BRIDGE	8,760			8,760	8,760		184	184
SOUTHBOUND BRIDGE	8,316	432		8,748	8,748	12	172	184
NB BRIDGE APPROACH					500			
NB BRIDGE DEPARTURE					500			
SB BRIDGE APPROACH					500			
SB BRIDGE DEPARTURE			620		242		30	
SUBTOTAL	17,076	432	620	17,508	19,250	12	386	368
TOTAL	17,508		620	36,758		766		

SUMMARY OF QUANTITIES

Q-1

STATE OF CALIFORNIA - DEPARTMENT OF TRANSPORTATION
Caltrans
NORTH REGION
OFFICE OF DESIGN SOUTH
DESIGN BRANCH S-11

FUNCTIONAL SUPERVISOR: JIM ELDER
CALCULATED-DESIGNED BY: SAEED AAZAMI
CHECKED BY: SAEED AAZAMI
REVISED BY
DATE REVISED

LAST REVISION 00-00-00
DATE PLOTTED => 24-JUN-2010
TIME PLOTTED => 08:48

Dist	COUNTY	ROUTE	POST MILES TOTAL PROJECT	SHEET No.	TOTAL SHEETS
03	Yol	5	0.8/2.5	5	30

REGISTERED ELECTRICAL ENGINEER 3-17-10 DATE

6-21-10
PLANS APPROVAL DATE

REGISTERED PROFESSIONAL ENGINEER
STEVEN S. LEE
No. 14170
Exp. 6-30-11
ELECTRICAL
STATE OF CALIFORNIA

THE STATE OF CALIFORNIA OR ITS OFFICERS OR AGENTS SHALL NOT BE RESPONSIBLE FOR THE ACCURACY OR COMPLETENESS OF SCANNED COPIES OF THIS PLAN SHEET.

NOTE:

FOR ACCURATE RIGHT OF WAY AND ACCESS DATA, CONTACT RIGHT OF WAY ENGINEERING AT THE DISTRICT OFFICE.

PROJECT LEGEND

RWIS	ROADSIDE WEATHER INFORMATION SYSTEM
RPU	REMOTE PROCESSING UNIT
SLI	SENSOR LEAD-IN CABLE
□	EXISTING JUNCTION BOX
⊠	EXISTING RWIS TOWER AND RPU
○	SURFACE PAVEMENT SENSOR
◎	SUBSURFACE TEMPERATURE PROBE AND SURFACE PAVEMENT SENSOR
CTID	CALTRANS IDENTIFICATION
MVDS	EXISTING SOLAR POWERED MICROWAVE VEHICLE DETECTION SYSTEM
GPRS	GENERAL PACKET RADIO SYSTEM

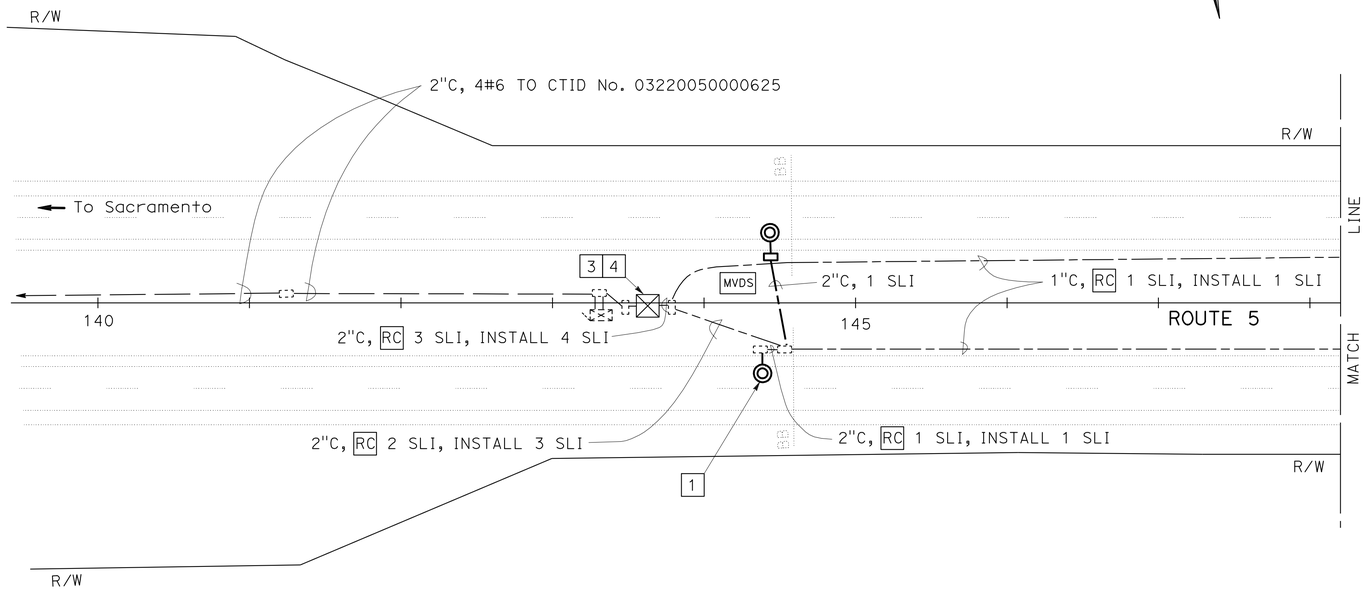

PROJECT NOTES (THIS SHEET ONLY):

1. AB EXISTING SURFACE PAVEMENT SENSOR. INSTALL SUBSURFACE TEMPERATURE PROBE WITH SURFACE PAVEMENT SENSOR.
2. AB EXISTING SURFACE PAVEMENT SENSOR. INSTALL SURFACE PAVEMENT SENSOR.
3. RS ALL EXISTING RWIS EQUIPMENT ON EXISTING TOWER BEFORE INSTALLING NEW RWIS EQUIPMENT INCLUDING MOUNTING RACKETS.
4. INSTALL GPRS MODEM AND ANTENNA CABLE IN RPU CABINET.

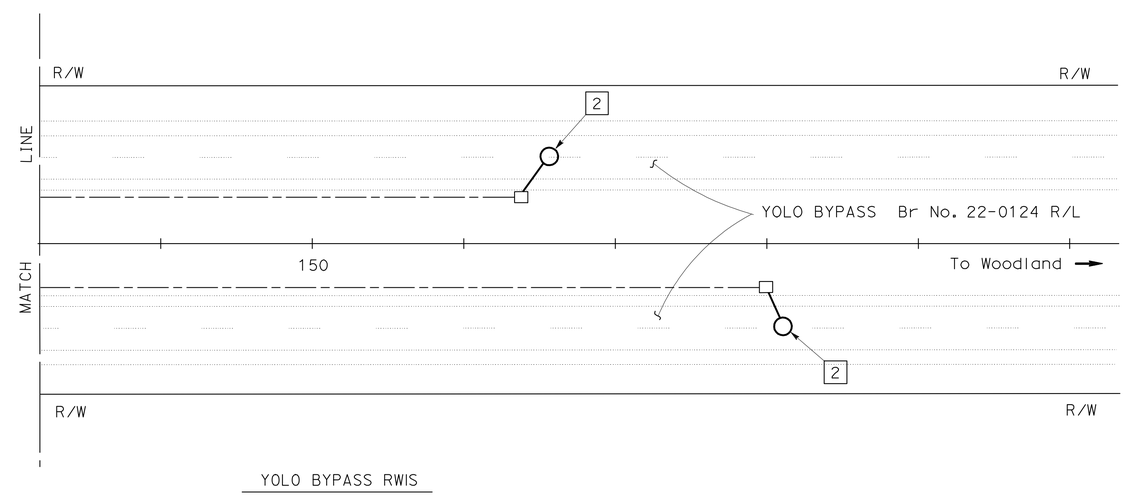

YOLO BYPASS RWIS

THIS PLAN IS ACCURATE FOR ELECTRICAL WORK ONLY.

MODIFY ROADSIDE WEATHER INFORMATION SYSTEM

SCALE: 1" = 50'

E-1

STATE OF CALIFORNIA - DEPARTMENT OF TRANSPORTATION
Caltrans TRAFFIC

FUNCTIONAL SUPERVISOR: NELSON LEE
CALCULATED-DESIGNED BY: STEVEN LEE
CHECKED BY: BERHANU ZERGAW
REVISED BY / DATE REVISED

LAST REVISION 00-00-00
DATE PLOTTED => 30-JUN-2010
TIME PLOTTED => 12:29

DIST	COUNTY	ROUTE	POST MILES TOTAL PROJECT	SHEET NO.	TOTAL SHEETS
03	Yol	5	0.8/2.5	6	30

Randell D. Hiatt
REGISTERED CIVIL ENGINEER

June 6, 2008
PLANS APPROVAL DATE

REGISTERED PROFESSIONAL ENGINEER
Randell D. Hiatt
No. C50200
Exp. 6-30-09
CIVIL
STATE OF CALIFORNIA

The State of California or its officers or agents shall not be responsible for the accuracy or completeness of electronic copies of this plan sheet.

To accompany plans dated 6-21-10

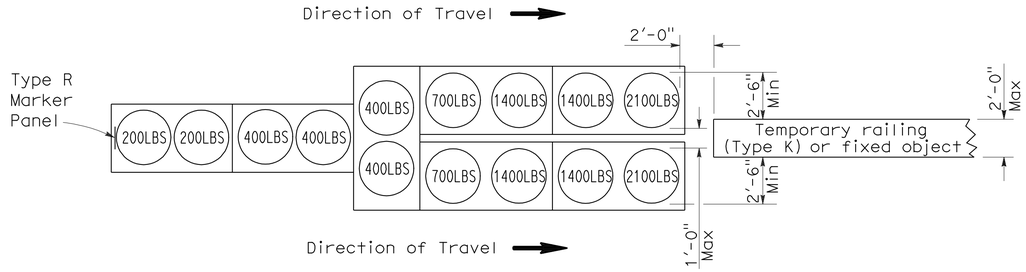

ARRAY 'TU14'

Approach speed 45 mph or more

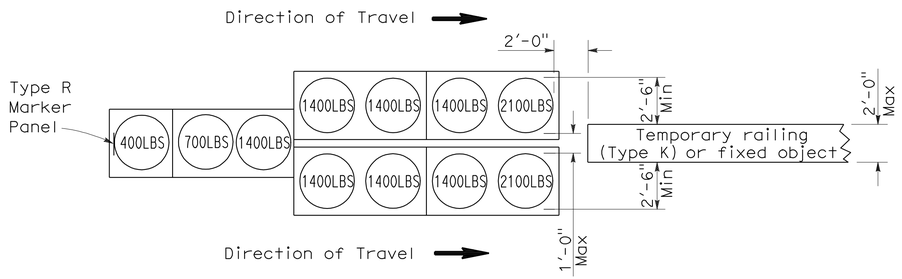

ARRAY 'TU11'

Approach speed less than 45 mph

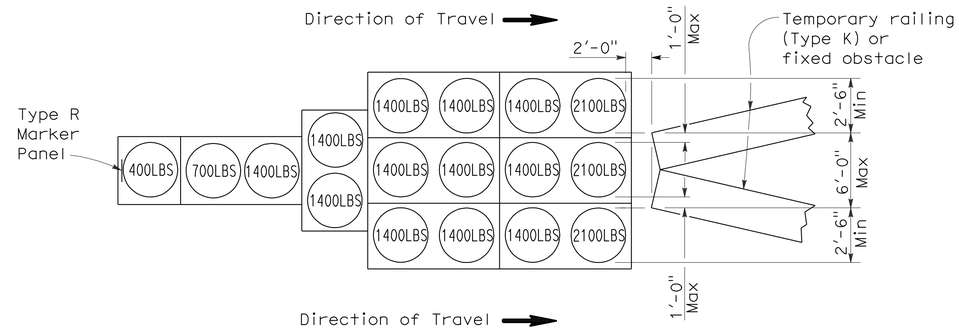

ARRAY 'TU17'

Approach speed less than 45 mph

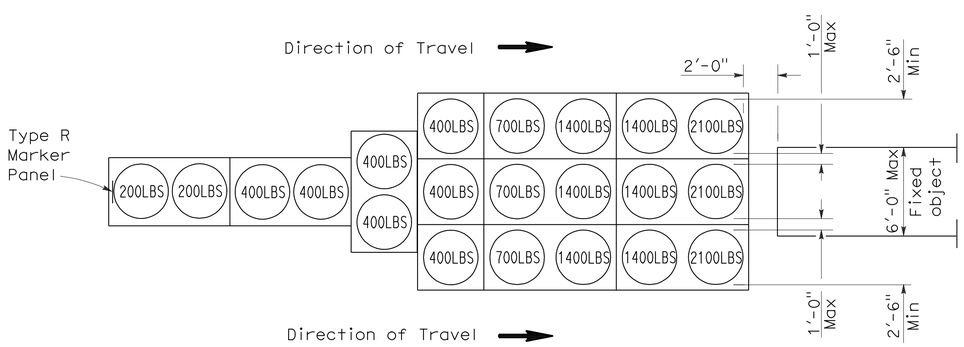

ARRAY 'TU21'

Approach speed 45 mph or more

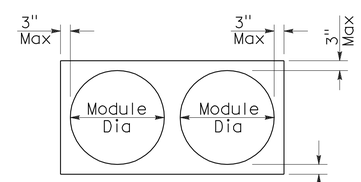

PLAN

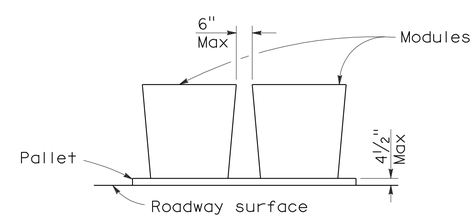

ELEVATION

CRASH CUSHION PALLET DETAIL

See Note 7

NOTES:

1. (XXX) Indicates sand filled module location and weight of sand in pounds for each module. Module spacing is based on the greater diameter of the module.
2. All sand weights are nominal.
3. Temporary crash cushion arrays shall not encroach on the traveled way.
4. Place the top of Type R marker panel 1" below the module lid.
5. Refer to Standard Plan A73B for marker details.
6. Approach speeds indicated conform to NCHRP 350 Report criteria.
7. Use of pallets is optional.

STATE OF CALIFORNIA
DEPARTMENT OF TRANSPORTATION

TEMPORARY CRASH CUSHION, SAND FILLED (UNIDIRECTIONAL)

NO SCALE

RSP T1A DATED JUNE 6, 2008 SUPERSEDES STANDARD PLAN T1A
DATED MAY 1, 2006 - PAGE 211 OF THE STANDARD PLANS BOOK DATED MAY 2006.

REVISED STANDARD PLAN RSP T1A

2006 REVISED STANDARD PLAN RSP T1A

DIST	COUNTY	ROUTE	POST MILES TOTAL PROJECT	SHEET NO.	TOTAL SHEETS
03	Yol	5	0.8/2.5	7	30

Randell D. Hiatt
REGISTERED CIVIL ENGINEER

June 6, 2008
PLANS APPROVAL DATE

REGISTERED PROFESSIONAL ENGINEER
Randell D. Hiatt
No. C50200
Exp. 6-30-09
CIVIL
STATE OF CALIFORNIA

The State of California or its officers or agents shall not be responsible for the accuracy or completeness of electronic copies of this plan sheet.

To accompany plans dated 6-21-10

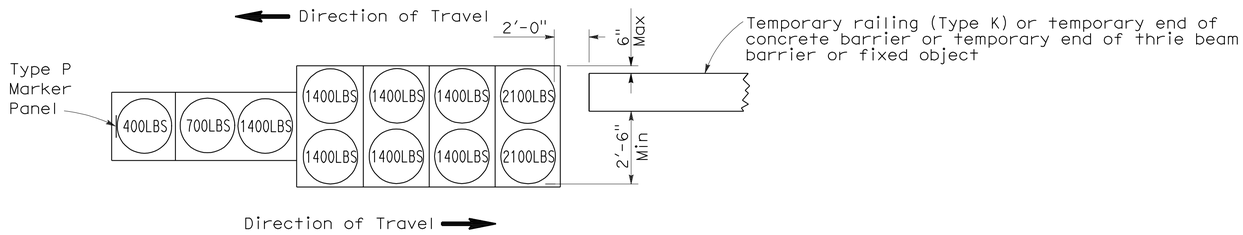

ARRAY 'TB11'

Approach speed less than 45 mph

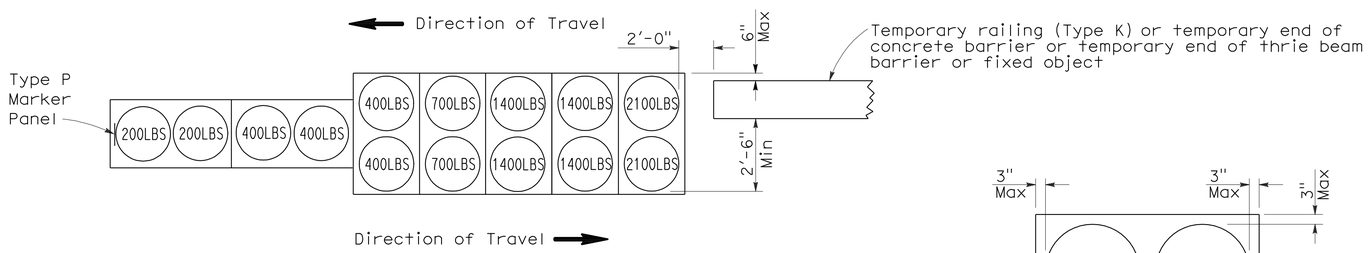

ARRAY 'TB14'

Approach speed 45 mph or more

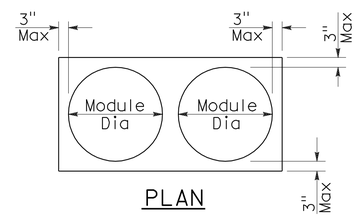

PLAN

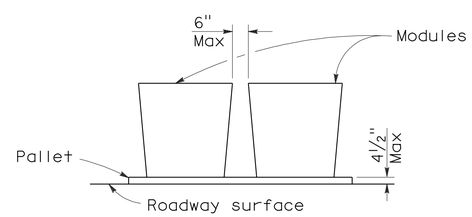

ELEVATION

CRASH CUSHION PALLET DETAIL

See Note 7

NOTES:

1. (XXX) Indicates sand filled module location and weight of sand in pounds for each module. Module spacing is based on the greater diameter of the module.
2. All sand weights are nominal.
3. Temporary crash cushion arrays shall not encroach on the traveled way.
4. Place the Type P marker panel so that the bottom of the panel rests upon the pallet.
5. Refer to Standard Plan A73B for marker details.
6. Approach speeds indicated conform to NCHRP 350 Report criteria.
7. Use of pallets is optional.

STATE OF CALIFORNIA
DEPARTMENT OF TRANSPORTATION

TEMPORARY CRASH CUSHION, SAND FILLED (BIDIRECTIONAL)

NO SCALE

RSP T1B DATED JUNE 6, 2008 SUPERSEDES STANDARD PLAN T1B
DATED MAY 1, 2006 - PAGE 212 OF THE STANDARD PLANS BOOK DATED MAY 2006.

REVISED STANDARD PLAN RSP T1B

2006 REVISED STANDARD PLAN RSP T1B

5-15-08

DIST	COUNTY	ROUTE	POST MILES TOTAL PROJECT	SHEET NO.	TOTAL SHEETS
03	Yol	5	0.8/2.5	8	30

Randell D. Hiatt
REGISTERED CIVIL ENGINEER

June 6, 2008
PLANS APPROVAL DATE

REGISTERED PROFESSIONAL ENGINEER
Randell D. Hiatt
No. C50200
Exp. 6-30-09
CIVIL
STATE OF CALIFORNIA

The State of California or its officers or agents shall not be responsible for the accuracy or completeness of electronic copies of this plan sheet.

To accompany plans dated 6-21-10

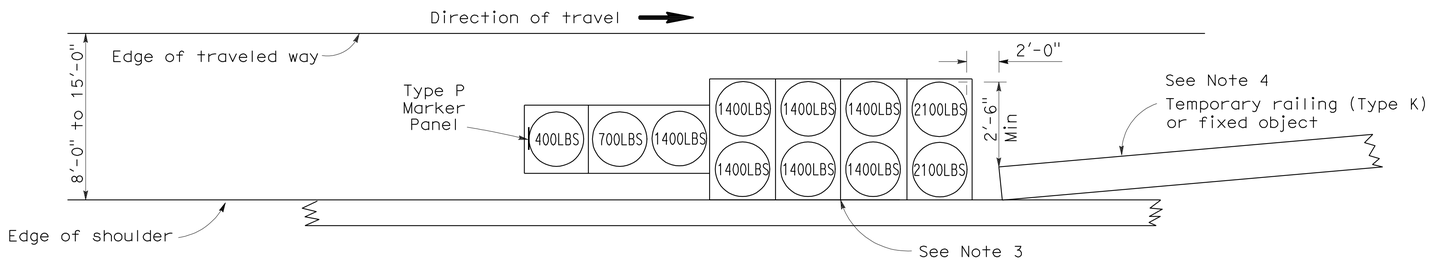

ARRAY 'TS11'

Approach speed less than 45 mph
See Note 9

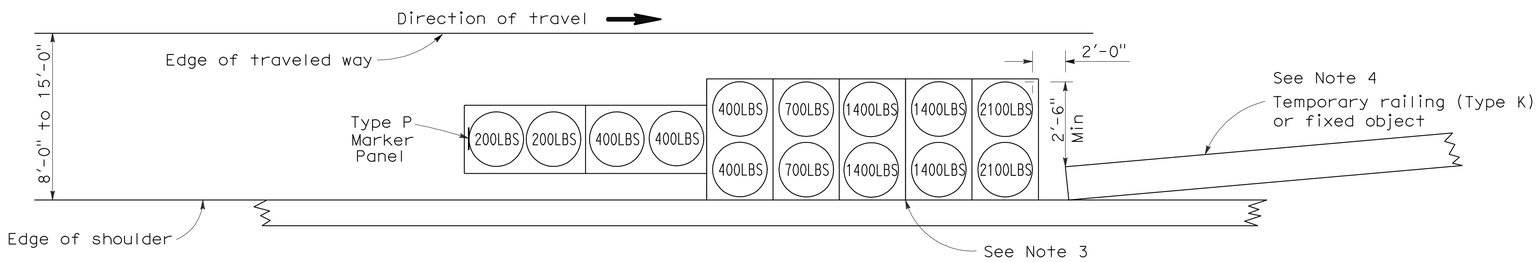

ARRAY 'TS14'

Approach speed 45 mph or more
See Note 9

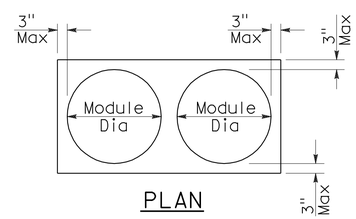

PLAN

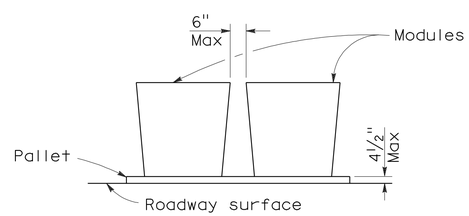

ELEVATION

CRASH CUSHION PALLET DETAIL

See Note 11

NOTES:

1. (XXX) Indicates sand filled module location and weight of sand in pounds for each module. Module spacing is based on the greater diameter of the module.
2. All sand weights are nominal.
3. The temporary crash cushion arrays shown on this plan shall be used only in locations where there will be traffic on one side of the temporary crash cushion array.
4. If the fixed object or approach end of the temporary railing is less than 15'-0" from the edge of traveled way, a temporary crash cushion is required in a construction or work zone.
5. Temporary crash cushion arrays shall not encroach on the traveled way.
6. Arrays for median shoulders shall conform to details shown on this plan for outside shoulders.
7. Place the Type P marker panel so that the bottom of the panel rests upon the pallet and faces traffic.
8. Refer to Standard Plan A73B for marker details.
9. For shoulder widths less than 8'-0", appropriate approved crash cushion protection, other than sand filled modules, shall be provided at fixed objects and at approach ends of temporary railing. The specific type of crash cushion shall be as shown on the project plans or as specified in the Special Provisions, or if not shown on the project plans or specified in the Special Provisions, shall be as approved by the Engineer.
10. Approach speeds indicated conform to NCHRP 350 Report criteria.
11. Use of pallets is optional.

STATE OF CALIFORNIA
DEPARTMENT OF TRANSPORTATION

TEMPORARY CRASH CUSHION, SAND FILLED (SHOULDER INSTALLATIONS)

NO SCALE

RSP T2 DATED JUNE 6, 2008 SUPERSEDES STANDARD PLAN T2
DATED MAY 1, 2006 - PAGE 213 OF THE STANDARD PLANS BOOK DATED MAY 2006.

REVISED STANDARD PLAN RSP T2

2006 REVISED STANDARD PLAN RSP T2

5-15-08

DIST	COUNTY	ROUTE	POST MILES TOTAL PROJECT	SHEET NO.	TOTAL SHEETS
03	Yol	5	0.8/2.5	9	30

REGISTERED CIVIL ENGINEER

November 17, 2006
PLANS APPROVAL DATE

REGISTERED PROFESSIONAL ENGINEER
Greg W. Edwards
No. C36386
Exp. 6-30-08
CIVIL
STATE OF CALIFORNIA

The State of California or its officers or agents shall not be responsible for the accuracy or completeness of electronic copies of this plan sheet.

To accompany plans dated 6-21-10

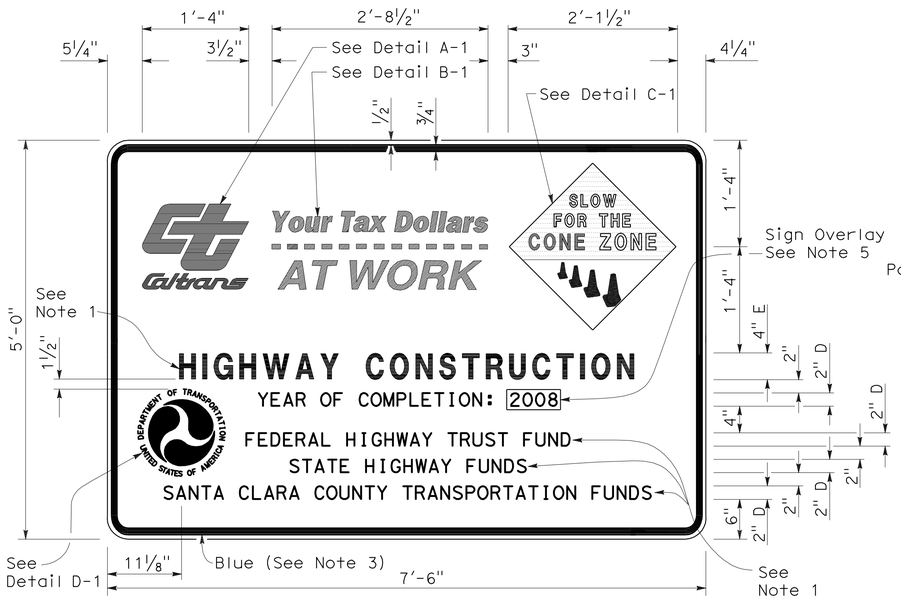

TYPE 1

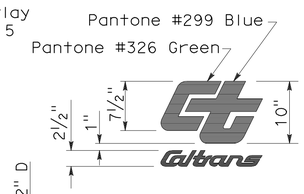

DETAIL A-1

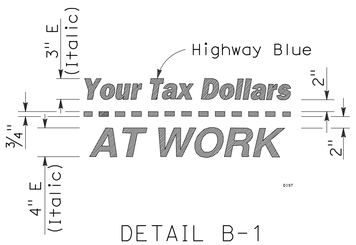

DETAIL B-1
(See Note 3)

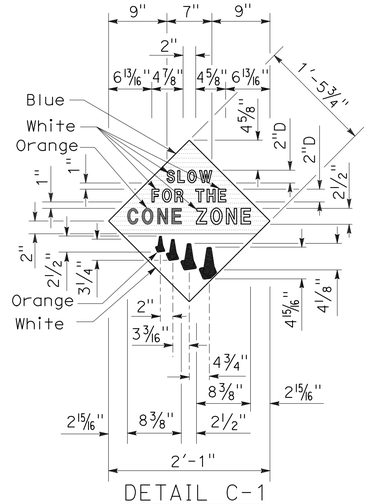

DETAIL C-1
(See Note 4)

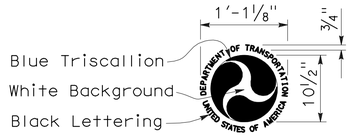

DETAIL D-1
(See Note 6)

NOTES:

1. The sign messages shown for type of project and fund types are examples only. See the Special Provisions for the applicable type of project and fund type messages to be used.
2. Except as otherwise shown, the legend of sign shall be black on a white background (non-reflective).
3. The border of the signs and details "B-1" and "B-2" shall be blue (non-reflective).
4. The diamond in details "C-1" and "C-2" shall be blue for the background of message, " SLOW FOR THE CONE ZONE", and white background for the orange cones. The color and type of font for the "SLOW FOR THE CONE ZONE" message shall be: "SLOW" white D; "FOR THE" white D; "CONE" orange Arial font; "ZONE" white Arial font.
5. Year of completion of project construction shown on the overlay is an example only. See the Special Provisions.
6. Use when the Project involves Federal Highway Trust Fund.

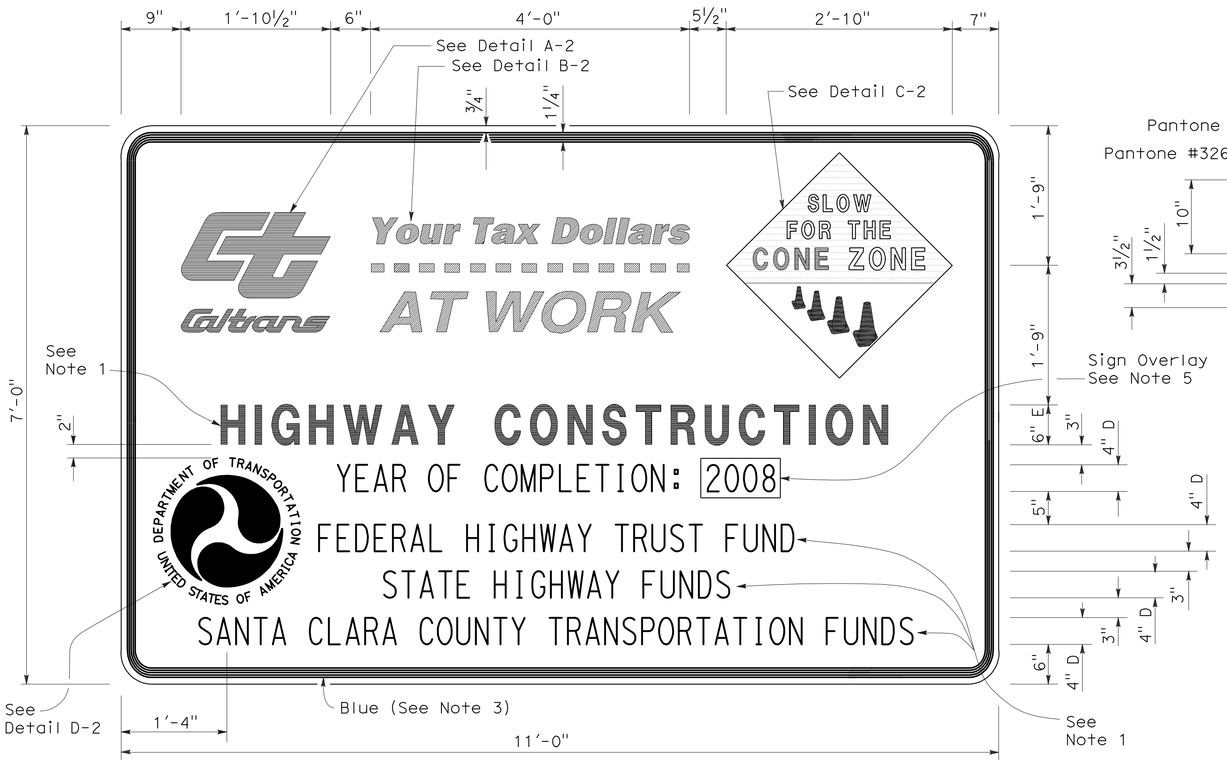

TYPE 2

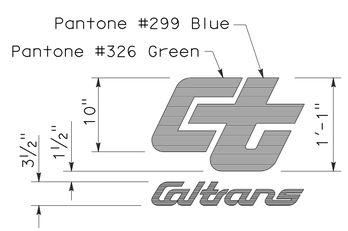

DETAIL A-2

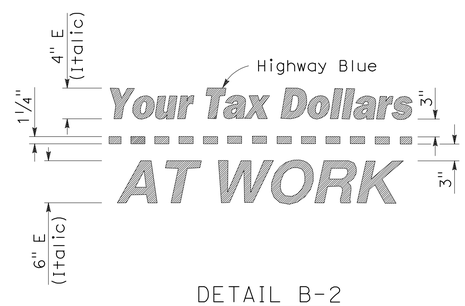

DETAIL B-2
(See Note 3)

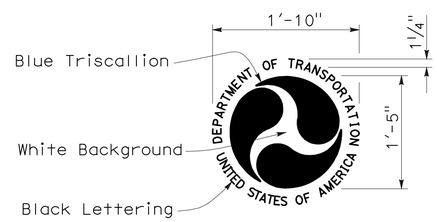

DETAIL D-2
(See Note 6)

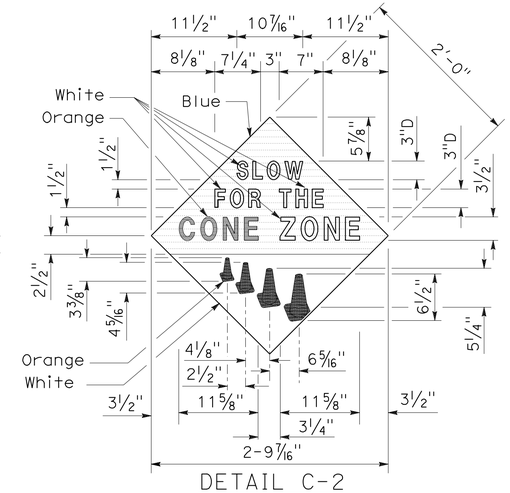

DETAIL C-2
(See Note 4)

STATE OF CALIFORNIA
DEPARTMENT OF TRANSPORTATION

CONSTRUCTION PROJECT FUNDING IDENTIFICATION SIGNS

NO SCALE

RSP T7 DATED NOVEMBER 17, 2006 SUPERSEDES STANDARD PLAN T7
DATED MAY 1, 2006 - PAGE 217 OF THE STANDARD PLANS BOOK DATED MAY 2006.

REVISED STANDARD PLAN RSP T7

2006 REVISED STANDARD PLAN RSP T7

9-7-06

DIST	COUNTY	ROUTE	POST MILES TOTAL PROJECT	SHEET NO.	TOTAL SHEETS
03	Yol	5	0.8/2.5	10	30

LICENSED LANDSCAPE ARCHITECT

April 3, 2009
PLANS APPROVAL DATE

The State of California or its officers or agents shall not be responsible for the accuracy or completeness of electronic copies of this plan sheet.

LICENSED LANDSCAPE ARCHITECT
Robert B. Schott 3695
Signature
11-30-10
Renewal Date
2-25-09
Date
STATE OF CALIFORNIA

To accompany plans dated 6-21-10

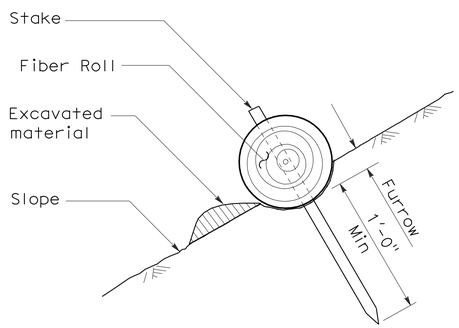

SECTION

TEMPORARY FIBER ROLL (TYPE 1)

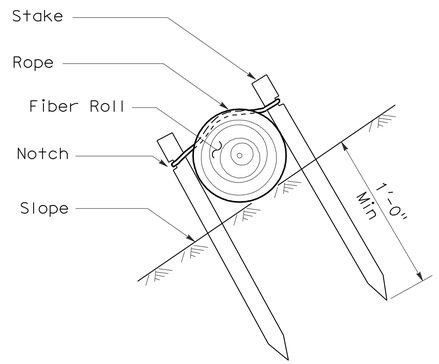

SECTION

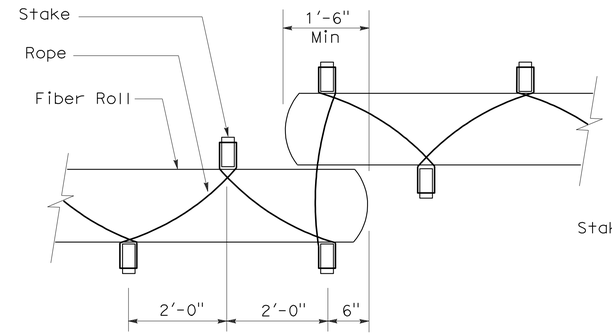

PLAN

TEMPORARY FIBER ROLL (TYPE 2)

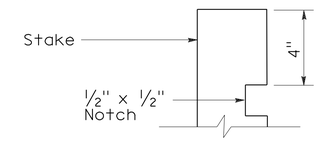

ELEVATION

STAKE NOTCH DETAIL

NOTES:

1. Temporary fiber roll spacing varies depending upon slope inclination.
2. Installations shown in the perspectives are for slope inclination of 10:1 and steeper.

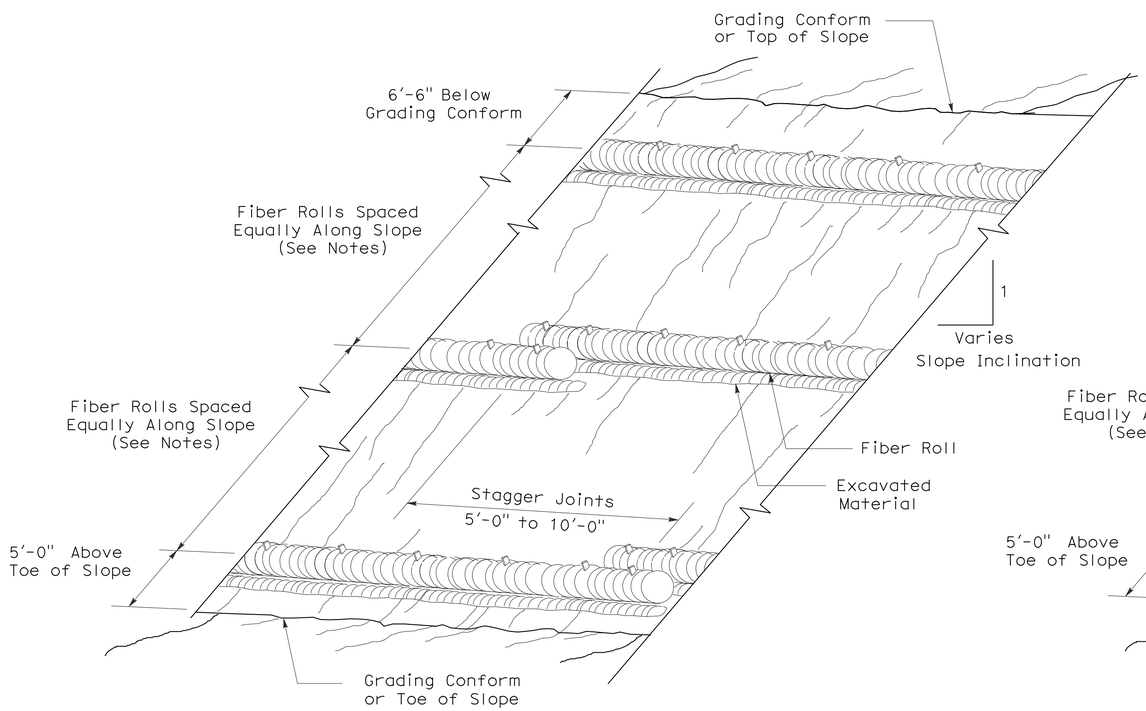

PERSPECTIVE

TEMPORARY FIBER ROLL (TYPE 1)

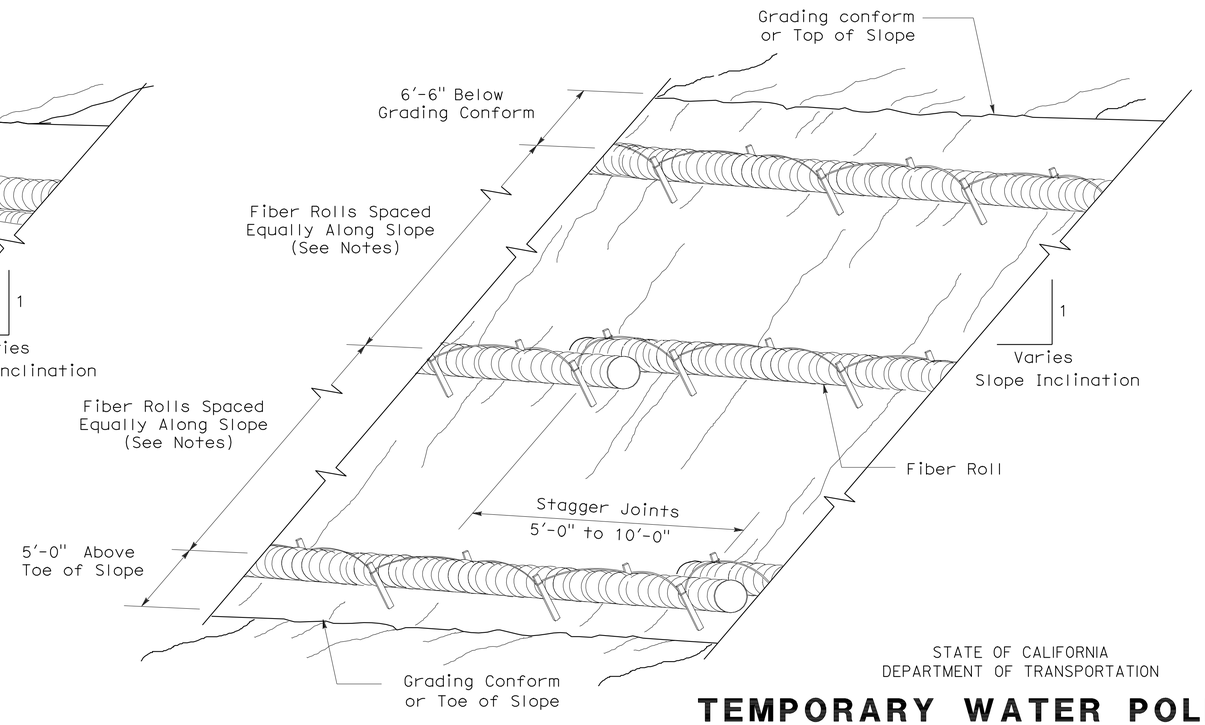

PERSPECTIVE

TEMPORARY FIBER ROLL (TYPE 2)

STATE OF CALIFORNIA
DEPARTMENT OF TRANSPORTATION

TEMPORARY WATER POLLUTION CONTROL DETAILS (TEMPORARY FIBER ROLL)

NO SCALE

RSP T56 DATED APRIL 3, 2009 SUPERSEDES STANDARD PLAN T56 DATED MAY 1, 2006 - PAGE 232 OF THE STANDARD PLANS BOOK DATED MAY 2006.

REVISED STANDARD PLAN RSP T56

2006 REVISED STANDARD PLAN RSP T56

2-23-09

DIST	COUNTY	ROUTE	POST MILES TOTAL PROJECT	SHEET NO.	TOTAL SHEETS
03	Yol	5	0.8/2.5	11	30

REGISTERED CIVIL ENGINEER

October 5, 2007
PLANS APPROVAL DATE

REGISTERED PROFESSIONAL ENGINEER Efthymios Delis No. C51434 Exp. 6-30-08 CIVIL STATE OF CALIFORNIA

The State of California or its officers or agents shall not be responsible for the accuracy or completeness of electronic copies of this plan sheet.

To accompany plans dated 6-21-10

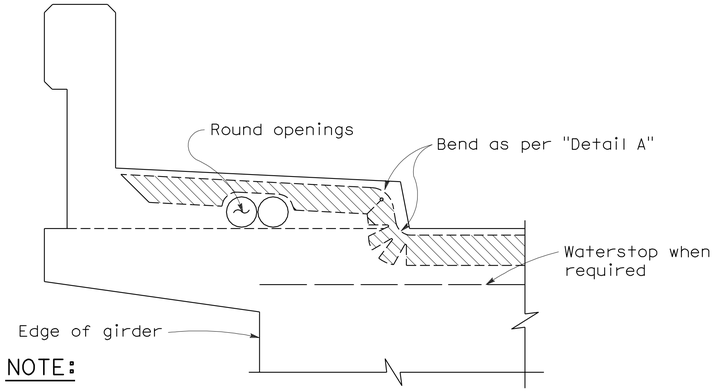

NOTE:

Type "B" seal shown. Type "A" seals to comform to the general path of seal shown, cuts for bending not required. Bend Type "A" seals 3" up into curb or barrier rail on only the low end of the seal.

CONCRETE BARRIER AND SIDEWALK

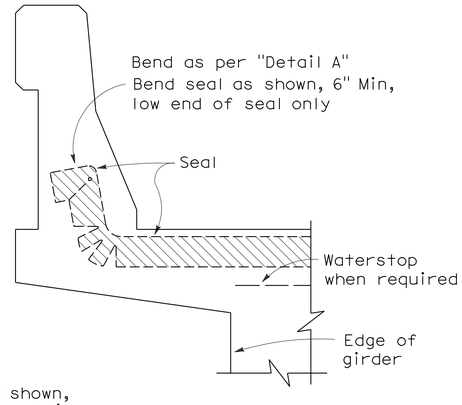

CONCRETE BARRIER

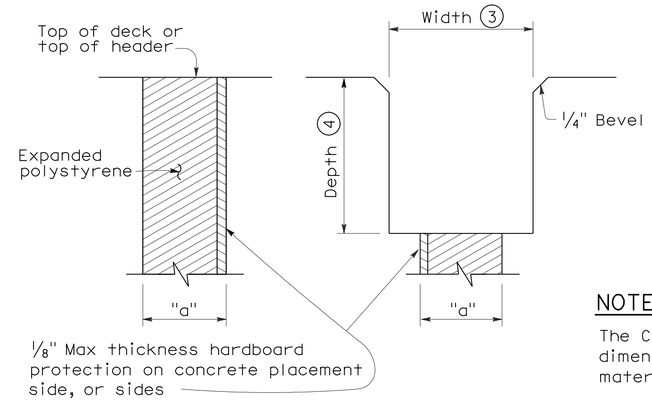

FORMING DETAIL SAWCUT DETAIL

NOTE:

The Contractor shall verify all controlling field dimensions before ordering or fabricatiing any material.

JOINT SEALS DETAILS

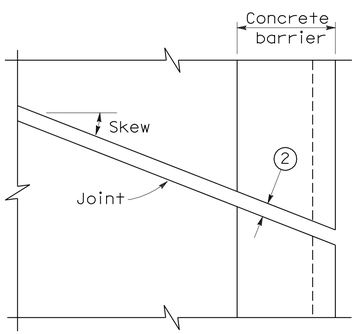

PLAN OF JOINT (SKEW ≤ 20°)

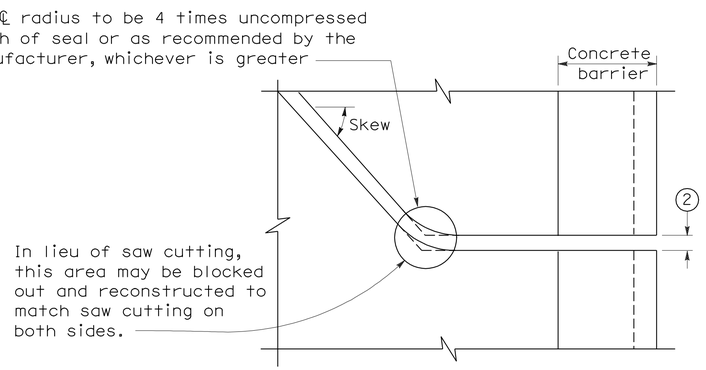

PLAN OF JOINT (SKEW > 20°)

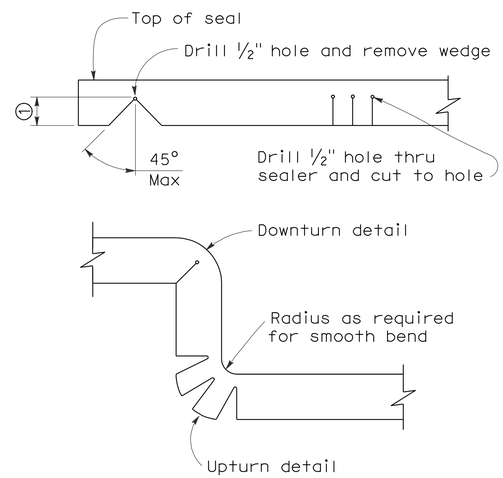

DETAIL A

NOTES:

1. Make smooth cuts from the bottom of seal to 1½" clear of top leaving at least one complete cell between the top of the cut and top of the seal. When necessary cut back of seal to clear conduit and round openings.
2. Opening in barrier to match width of sawn deck joint.
3. Sawcut groove widths shall be as ordered by the Engineer.
4. Depth of sawcut: Type A - Depth to be 2" minimum.
   Type B - Depth to be equal to or greater than the depth of seal measured along the contact surface, when compressed to minimum width position (W_2) plus dimensions shown.
5. MR (movement rating) as shown on other plan sheets.
6. Other depths must be approved by the Engineer.

DIMENSIONS "a" OF JOINT REQUIRED

Movement Rating (MR) (5)	Bridge Type	"a" Dimension Deck Concrete Placed		
		Winter	Fall-Spring	Summer
2"	All except CIP/PS	1½"	1¼"	¾"
	CIP/PS	1¼"	1"	½"
1½"	All except CIP/PS	1¼"	1"	½"
	CIP/PS	1"	¾"	½"
1"	All except CIP/PS	1"	¾"	½"
	CIP/PS	¾"	½"	½"
½"	All except CIP/PS	¾"	¾"	½"
	CIP/PS	½"	½"	½"

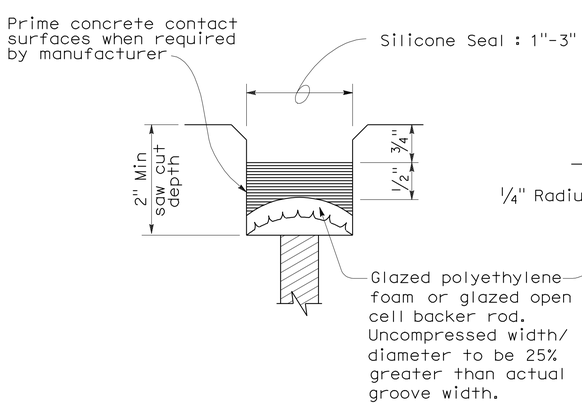

TYPE A SEAL

Movement rating : Silicone = 1" Max

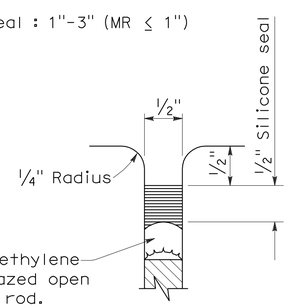

TYPE AL SEAL

Longitudinal joints only

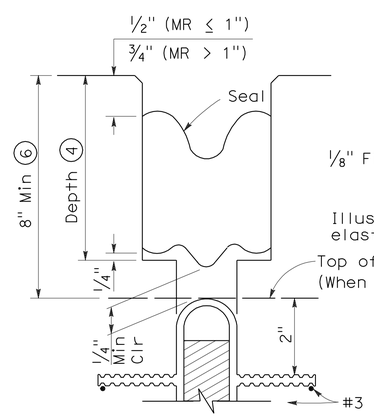

TYPE B JOINT SEAL
IN MINIMUM WIDTH POSITION (W_2)

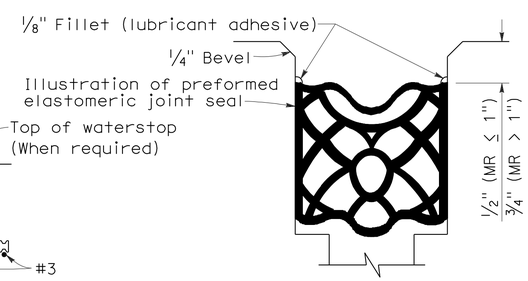

TYPE B SEAL

Movement Rating ≤ 2"

STATE OF CALIFORNIA
DEPARTMENT OF TRANSPORTATION

JOINT SEALS (MAXIMUM MOVEMENT RATING = 2")

NO SCALE

RSP B6-21 DATED OCTOBER 5, 2007 SUPERSEDES STANDARD PLAN B6-21 DATED MAY 1, 2006 - PAGE 258 OF THE STANDARD PLANS BOOK DATED MAY 2006.

REVISED STANDARD PLAN RSP B6-21

2006 REVISED STANDARD PLAN RSP B6-21

5-8-07

DIST	COUNTY	ROUTE	POST MILES TOTAL PROJECT	SHEET NO.	TOTAL SHEETS
03	Yol	5	0.8/2.5	12	30

REGISTERED ELECTRICAL ENGINEER

October 5, 2007
PLANS APPROVAL DATE

REGISTERED PROFESSIONAL ENGINEER
Jeffery G. McRae
No. E14512
Exp. 6-30-08
ELECTRICAL
STATE OF CALIFORNIA

The State of California or its officers or agents shall not be responsible for the accuracy or completeness of electronic copies of this plan sheet.

To accompany plans dated 6-21-10

ELECTROLIERS

STANDARD TYPES
15, 15D
15 STRUCTURE
21, 21D STRUCTURE
30
31
32
35
36-20A

High mast light pole

Double Arm lighting standard

Existing electrolier

Electrolier foundation (Future installation)

NOTES:

1. Luminaires shall be 310 W HPS when installed on Type 21, 21D, 30, 31, 32, 35 and 36-20A Standards, unless otherwise specified. Luminaires shall be 200 W HPS when installed on other type standards or poles, unless otherwise specified.
2. Luminaires shall be the cutoff type, ANSI Type Ⅲ medium cutoff lighting distribution, unless otherwise specified.
3. Variations noted adjacent to symbol on project plans.

Electrolier (see project notes or project plans)

Luminaire on wood pole

STANDARD NOTES:

- AB — Abandon. If applied to conduit, remove conductors.
- BC — Install pull box in existing conduit run.
- BP — Pedestrian barricade, type as indicated on plan.
- CB — Install conduit into existing pull box.
- CC — Connect new and existing conduit. Remove existing conductors and install conductors as indicated.
- CF — Conduit to remain for future use. Remove conductors. Install pull wire or rope.
- DH — Detector handhole.
- FA — Foundation to be abandoned.
- IS — Install sign on signal mast arm.
- NS — No slip base on standard.
- PEC — Photoelectric control.
- PEU — Photoelectric unit.
- RC — Equipment or material to be removed and become the property of the Contractor.
- RE — Remove electrolier, fuses and ballast. Tape ends of conductors.
- RL — Relocate equipment.
- RR — Remove and reuse equipment.
- RS — Remove and salvage equipment.
- SC — Splice new to existing conductors.
- SD — Service disconnect.
- SF — Standard to remain for future use. Remove luminaire, pole conductors, fuses and ballast.
- TSP — Telephone service point.

ABBREVIATIONS AND EQUIPMENT DESIGNATIONS

PROPOSED	EXISTING	
BBS	bbs	Battery backup system
BC	bc	Bolt circle
C	C	Conduit
CCTV	cctv	Closed circuit television
CKT	ckt	Circuit
CMS	cms	Changeable message sign
DLC	dlc	Loop detector lead-in cable
EMS	ems	Extinguishable message sign
EVC	evc	Emergency vehicle cable
EVD	evd	Emergency vehicle detector
FB	fb	Flashing beacon
FBCA	fbca	Flashing beacon control assembly
FBS	fbs	Flashing beacon with slip base
FO	fo	Fiber optic
G	G	Ground (Equipment Grounding Conductor)
GFCI	GFCI	Ground fault circuit interrupt
HAR	har	Highway advisory radio
HEX	hex	Hexagonal
HPS	hps	High pressure sodium
IISNS	iisns	Internally illuminated street name sign
ISL	isl	Induction sign lighting
LED	led	Light emitting diode
LMA	lma	Luminaire mast arm
LPS	lps	Low pressure sodium
LTG	ltg	Lighting
LUM	lum	Luminaire
MAT	mat	Mast arm mounting vehicle signal faces, top attachment
MAS	mas	Mast arm mounting vehicle signal faces, side attachment
MAS-4A	mas-4A	Mast arm mounting vehicle signal faces, side attachment - 4 signal section
MAS-4B	mas-4B	
MAS-4C	mas-4C	
MAS-5A	mas-5A	Mast arm mounting vehicle signal faces, side attachment - 5 signal section
MAS-5B	mas-5B	
MC	mc	Mercury contactor
M/M	m/m	Multiple to multiple transformer
MT	mt	Conduit with pull wire or rope only
MTG	mtg	Mounting
	mv	Mercury vapor lighting fixture
N	N	Neutral (Grounded Conductor)
NC	NC	Normally closed
NO	NO	Normally open
PB	pb	Pull box
PEC	pec	Photoelectric control (Type Ⅰ, Ⅱ, Ⅲ, Ⅳ or Ⅴ as shown)
PED	ped	Pedestrian
PEU	peu	Photoelectric unit
PPB	ppb	Pedestrian push button
RL		Relocated equipment
RM	rm	Ramp metering
SB	sb	Slip base
SIC	sic	Signal interconnect cable
SIG	sig	Signal
SMA	sma	Signal mast arm
SNS	sns	Street name sign
SP	sp	Service point
TDC	tdc	Telephone demarcation cabinet
TMS	tms	Traffic monitoring station
TOS	tos	Traffic Operations System
VEH	veh	Vehicle
XFMR	xfmr	Transformer
COMM	comm	Communication
RWIS	rwis	Roadway weather information system

SOFFIT AND WALL MOUNTED LUMINAIRES

Pendant, 70 W HPS unless otherwise specified.

Flush, 70 W HPS unless otherwise specified.

Wall surface, 70 W HPS unless otherwise specified.

Existing soffit or wall luminaire to remain unmodified.

Existing soffit or wall luminaire to be modified as specified.

NOTE:

Arrow indicates "street side" of luminaire.

STATE OF CALIFORNIA
DEPARTMENT OF TRANSPORTATION

ELECTRICAL SYSTEMS (SYMBOLS AND ABBREVIATIONS)

NO SCALE

RSP ES-1A DATED OCTOBER 5, 2007 SUPERSEDES STANDARD PLAN ES-1A DATED MAY 1, 2006 - PAGE 400 OF THE STANDARD PLANS BOOK DATED MAY 2006.

REVISED STANDARD PLAN RSP ES-1A

2006 REVISED STANDARD PLAN RSP ES-1A

DIST	COUNTY	ROUTE	POST MILES TOTAL PROJECT	SHEET NO.	TOTAL SHEETS
03	Yol	5	0.8/2.5	13	30

REGISTERED ELECTRICAL ENGINEER

October 5, 2007
PLANS APPROVAL DATE

REGISTERED PROFESSIONAL ENGINEER
Jeffery G. McRae
No. E14512
Exp. 6-30-08
ELECTRICAL
STATE OF CALIFORNIA

The State of California or its officers or agents shall not be responsible for the accuracy or completeness of electronic copies of this plan sheet.

To accompany plans dated 6-21-10

CONDUIT

PROPOSED	EXISTING	
		Lighting Conduit, unless otherwise indicated or noted
		Traffic signal conduit
C	c	Communication conduit
T	t	Telephone conduit
F	f	Fire alarm conduit
FO	fo	Fiber optic conduit
		Conduit termination (RSP ES-9A C)
R	r	Conduit riser in/on structure or service pole

SERVICE EQUIPMENT

PROPOSED	EXISTING	
OH	oh	Overhead lines
U	U	Wood pole "U" indicates utility owned
		Pole guy with anchor
		Utility transformer - ground mounted
III		Service equipment enclosure type
		Service equipment enclosure door indicates front of enclosure
T	t	Telephone demarcation cabinet

POLE-MOUNTED SERVICE DESIGNATION

Type of installation

TYPE H SERVICE - 28'-10" ← Pole height above grade

ILLUMINATED OVERHEAD SIGN

PROPOSED	EXISTING	
		Overhead sign - Single post
		Overhead sign - Two post
		Overhead sign - Mounted on structure
		Overhead sign with electrolier

SIGNAL EQUIPMENT

PROPOSED	EXISTING	
		Pedestrian signal face
		Pedestrian push button post
		Pedestrian barricade
		Vehicle signal face (with backplate, 3-Section: red, yellow and green)
		Vehicle signal face with angle visors
PV	PV	Modifications of basic symbols: "L" indicates all non-arrow sections louvered "LG" indicates louvered green section only "PV" indicates 12" programmed visibility sections "8" indicates all 8" sections (only when specified)
		Type 15TS and Vehicle signal face
		Vehicle signal face with red, yellow and green left arrow sections
		Vehicle signal face with red and yellow sections and up green arrow
		Vehicle signal face (5 Section) with red, yellow and green sections and yellow and green right arrows
		Type 1 Standard and attached vehicle signal faces
		Standard with signal mast arm only and attached vehicle signal faces and internally illuminated street name sign
		Type 33 Standard, Left-turn vehicle signal face and sign
		Standard with luminaire and signal mast arms and attached vehicle signal faces
		Cantilever flashing beacon Type 9 Frame, with a sign unless otherwise specified or indicated
		Type 15-FBS Standard with two vehicle signal face sections with lens, backplate and visor with a sign
R	Y	Flashing beacon. One vehicle signal face section with lens, backplate and visor. "R" indicates red indication, "Y" indicates yellow indication
		Controller assembly. Door indicates front of cabinet

SIGNAL EQUIPMENT Cont

PROPOSED	EXISTING	
		Guard post
		Type 1 Standard with "Meter On" sign
		Emergency Vehicle detector

NOTES:

1. All signal sections shall be 12" unless shown otherwise.
2. Signal heads shall be provided with backplates unless shown otherwise.
3. Signal indication shall be LED.

STATE OF CALIFORNIA
DEPARTMENT OF TRANSPORTATION

ELECTRICAL SYSTEMS (SYMBOLS AND ABBREVIATIONS)

NO SCALE

RSP ES-1B DATED OCTOBER 5, 2007 SUPERCEDES STANDARD PLAN ES-1B DATED MAY 1, 2006 - PAGE 401 OF THE STANDARD PLANS BOOK DATED MAY 2006.

REVISED STANDARD PLAN RSP ES-1B

2006 REVISED STANDARD PLAN RSP ES-1B

7-10-07

DIST	COUNTY	ROUTE	POST MILES TOTAL PROJECT	SHEET NO.	TOTAL SHEETS
03	Yol	5	0.8/2.5	14	30

REGISTERED ELECTRICAL ENGINEER

October 5, 2007
PLANS APPROVAL DATE

REGISTERED PROFESSIONAL ENGINEER
Jeffery G. McRae
No. E14512
Exp. 6-30-08
ELECTRICAL
STATE OF CALIFORNIA

The State of California or its officers or agents shall not be responsible for the accuracy or completeness of electronic copies of this plan sheet.

To accompany plans dated 6-21-10

EQUIPMENT IDENTIFICATION

ILLUMINATED SIGN IDENTIFICATION NUMBER:

Sign No. 12345 — Sign number - Place on post or structure

10 ISL SCI 1.0

- 1.0 — Transformer rating (kVA)
- SCI — Lighting control type
- ISL — Number and type of fixtures

Do NOT place on standard or structure

ELECTROLIER OR EQUIPMENT IDENTIFICATION NUMBER:

12345 - 15'-0"

- 15'-0" — Mast arm length, if shown. Do not place on standard or structure.
- 12345 — Equipment number - Place on standard or structure. Existing equipment numbers are shown in parenthesis

CONDUIT AND CONDUCTOR IDENTIFICATION:

1½"C, 2#10, 15#14, 2 DLC

- 2#10, 15#14, 2 DLC — Number and size of conductors and cables
- 1½"C — Size of conduit in inches

Ø1, Ø2, Ø2P, etc.	Traffic phase identification for signal faces, detectors and phase diagrams
1 2 3	Project note numbers
A B C	Equipment description, installation or item numbers
1 2 3	Conduit run numbers

SIGNAL AND LIGHTING STANDARD (TYPICAL DESIGNATION):

19A - 3 - 100

- 100 — Wind velocity = 100 mph
- 3 — Case 3 arm loading
- 19A — Standard type
- Standard Plan sheet number
- Detail number or letter

MISCELLANEOUS EQUIPMENT

PROPOSED	EXISTING	
CMS	cms	Changeable message sign
		Closed circuit television camera
		Highway advisory radio pole and antenna
EMS	ems	Extinguishable message sign
M V	m v	Detection device M = Microwave sensor V = Video image sensor

WIRING DIAGRAM LEGEND

P	Pole
CB	Circuit breaker
A	Ampere
V	Volt
M	Metered
UM	Unmetered
NB	Neutral bus
GB	Ground bus
G	Equipment grounding conductor
N	Grounded conductor (Neutral)

- External conductor
- Conductor or bus
- Tie point
- Contactor coil
- Contactor, Contact NO
- Terminal blocks
- Contactor, Contact NC
- Enclosure bond
- Grounding electrode
- Circuit breaker
- Receptacle

PULL BOXES

PROPOSED	EXISTING	
		Pull box-No. 5 unless otherwise indicated or noted.
3	9A(21)	Pull box-Additional designations or descriptions

3 = No. 3½ pull box
5 = No. 5 pull box
6 = No. 6 pull box
7 = No. 7 (Ceiling pull box)
8 = No. 8 (Pendant soffit pull box)
9 = No. 9 pull box
9A = No. 9A pull box

(C) = Communications pull box
(E) = Pull box with extension
(S) = Sprinkler control pull box
(21) = Anchor bolts and conduit for future installation of Type 21 Standard
(T) = Traffic pull box

VEHICLE DETECTORS

5 J 9 U

- U = Upper
- L = Lower
- Slot number in input file
- Input file (I or J)
- Phase — Vehicle detector designation

PROPOSED	EXISTING	
		Type A detector loop. Outline of sawcut shown.
		Type B detector loop. Outline of sawcut shown.
		Type C detector loop. Outline of sawcut shown.
		Type D detector loop. Outline of sawcut shown.
		Type E detector loop. Outline of sawcut shown.
		Type Q detector loop. Outline of sawcut shown.
		Magnetic detector
DH	dh	Detector handhole
		Microwave or video detection zone

STATE OF CALIFORNIA
DEPARTMENT OF TRANSPORTATION

ELECTRICAL SYSTEMS (SYMBOLS AND ABBREVIATIONS)

NO SCALE

RSP ES-1C DATED OCTOBER 5, 2007 SUPERCEDES STANDARD PLAN ES-1C DATED MAY 1, 2006 - PAGE 402 OF THE STANDARD PLANS BOOK DATED MAY 2006.

REVISED STANDARD PLAN RSP ES-1C

2006 REVISED STANDARD PLAN RSP ES-1C

DIST	COUNTY	ROUTE	POST MILES TOTAL PROJECT	SHEET NO.	TOTAL SHEETS
03	Yol	5	0.8/2.5	15	30

REGISTERED ELECTRICAL ENGINEER

October 5, 2007
PLANS APPROVAL DATE

REGISTERED PROFESSIONAL ENGINEER
Jeffery G. McRae
No. E14512
Exp. 6-30-08
ELECTRICAL
STATE OF CALIFORNIA

The State of California or its officers or agents shall not be responsible for the accuracy or completeness of electronic copies of this plan sheet.

To accompany plans dated 6-21-10

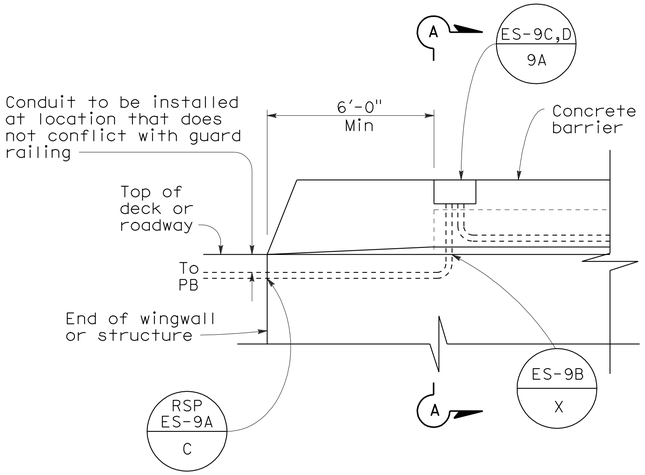

SIDEVIEW

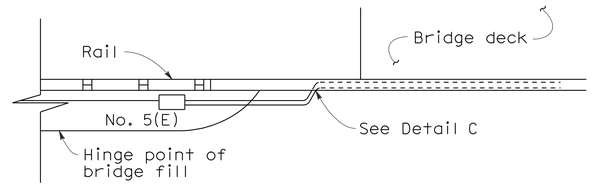

TOP VIEW

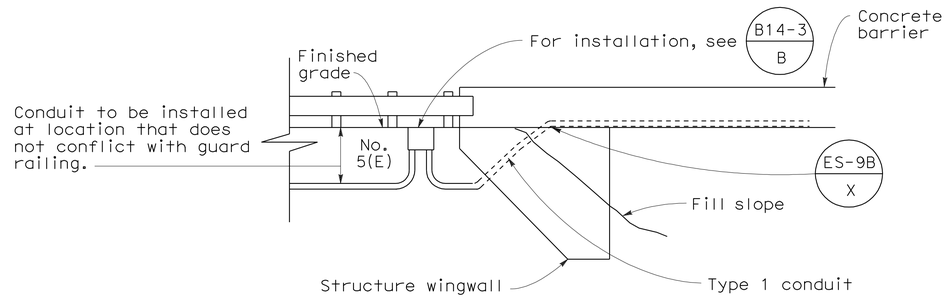

SIDE VIEW
DETAIL I
CONDUIT TERMINATION

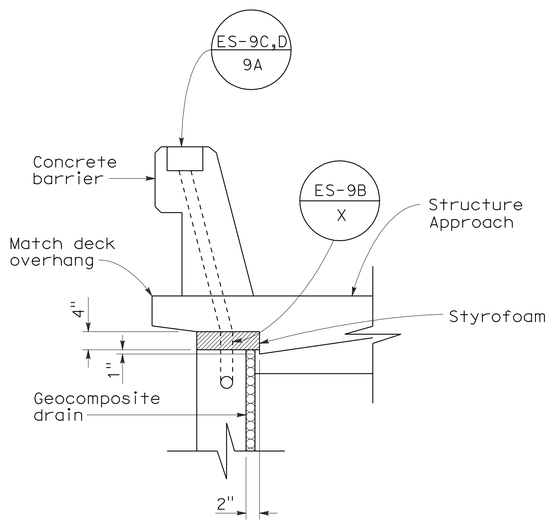

SECTION A-A

DETAIL A
CONDUIT TERMINATION

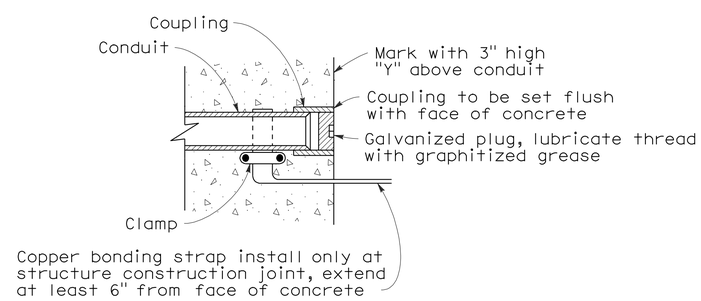

DETAIL C
CONDUIT TERMINATION

STATE OF CALIFORNIA
DEPARTMENT OF TRANSPORTATION

ELECTRICAL SYSTEMS (ELECTRICAL DETAILS STRUCTURE INSTALLATIONS)

NO SCALE

RSP ES-9A DATED OCTOBER 5, 2007 SUPERCEDES STANDARD PLAN ES-9A
DATED MAY 1, 2006 - PAGE 454 OF THE STANDARD PLANS BOOK DATED MAY 2006.

REVISED STANDARD PLAN RSP ES-9A

2006 REVISED STANDARD PLAN RSP ES-9A

DIST	COUNTY	ROUTE	POST MILES TOTAL PROJECT	SHEET NO.	TOTAL SHEETS
03	Yol	5	0.8/2.5	16	30

REGISTERED ELECTRICAL ENGINEER

October 5, 2007
PLANS APPROVAL DATE

REGISTERED PROFESSIONAL ENGINEER Jeffery G. McRae No. E14512 Exp. 6-30-08 ELECTRICAL STATE OF CALIFORNIA

The State of California or its officers or agents shall not be responsible for the accuracy or completeness of electronic copies of this plan sheet.

To accompany plans dated 6-21-10

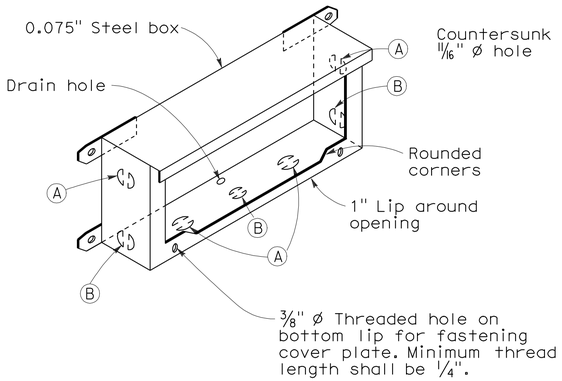

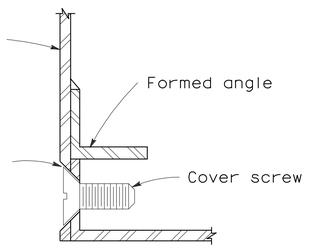

DETAIL J

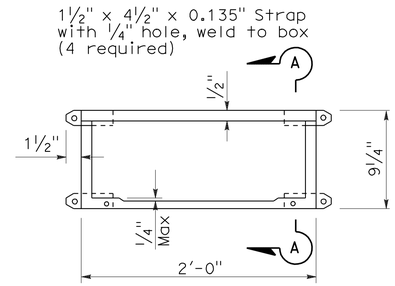

PLAN

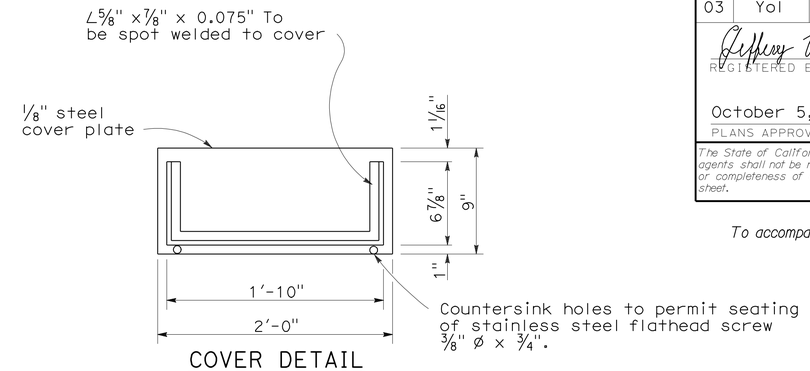

COVER DETAIL

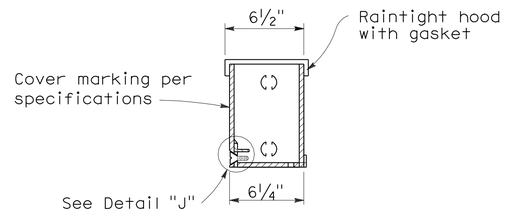

SECTION A-A

INSTALLATION NOTE:

Box shall be parallel to top of railing. Close cover box during pouring with 1/4" plywood of sufficient size to provide 1:1 chamfer on 3 sides of cover. Upper edge of plywood shall fit against lower edge of raintight hood.

No. 9 STRUCTURE PULL BOX

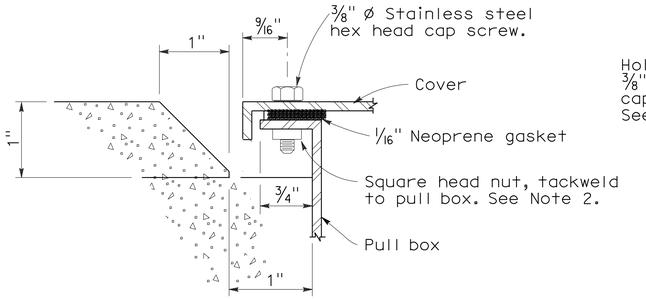

SECTION C-C

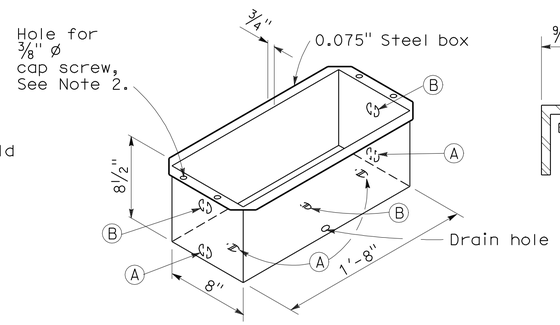

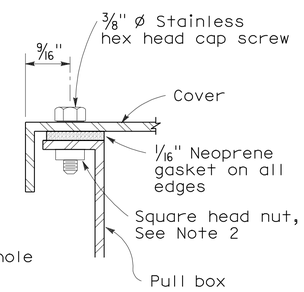

DETAIL A

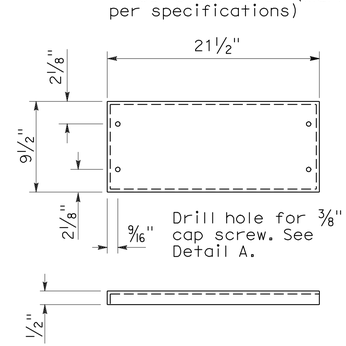

COVER DETAIL

NOTES: No. 9 and 9A Pull Box

1. Corner joints shall be lapped and secured by spot welding or riveting.
2. Where cap screws are used to attach cover to box, either of the following methods of providing adequate threading may be used:
   a. Tack weld square nut to bottom of flange (Total 4), or
   b. Tack weld a 1/4" x 5/8" x 8" bar beneath flange (Total 2).
3. Pound knockouts flat after punching.
4. Multiple size knockouts shall not be permitted.
5. Pull box covers shall be marked as shown on Standard Plan ES-8.

No. 9A STRUCTURE PULL BOX

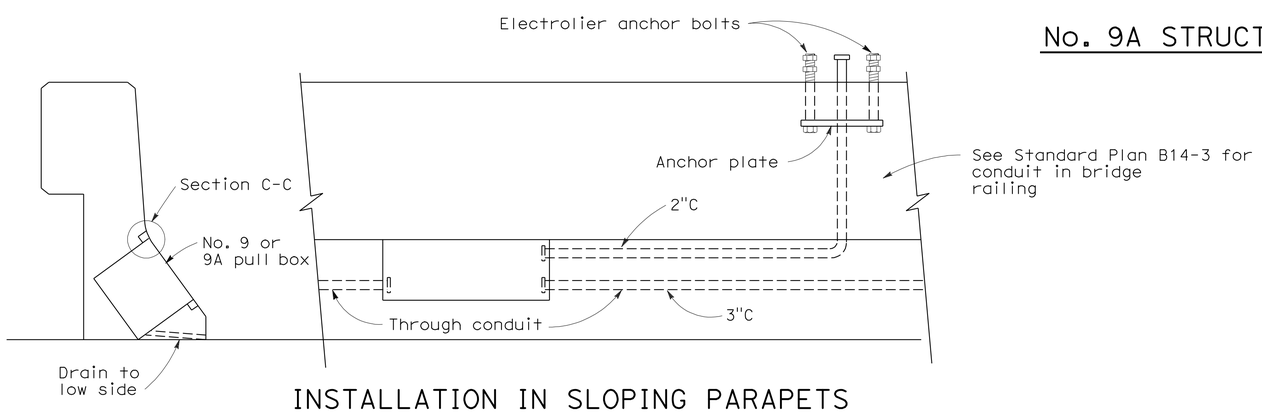

INSTALLATION IN SLOPING PARAPETS

For reinforcement in area of electrolier, see railing sheets. For electrolier anchor bolts, see Standard Plan ES-6B.

KNOCKOUT SCHEDULE
No. 9 AND 9A PULL BOX

(A) 2"C, 1 each end, 2 on bottom.

(B) 3"C, 1 each end, 1 on bottom.

STATE OF CALIFORNIA
DEPARTMENT OF TRANSPORTATION

ELECTRICAL SYSTEMS (ELECTRICAL DETAILS STRUCTURE INSTALLATIONS)

NO SCALE

RSP ES-9C DATED OCTOBER 5, 2007 SUPERCEDES STANDARD PLAN ES-9C DATED MAY 1, 2006 - PAGE 456 OF THE STANDARD PLANS BOOK DATED MAY 2006.

REVISED STANDARD PLAN RSP ES-9C

2006 REVISED STANDARD PLAN RSP ES-9C

7-26-07

DIST	COUNTY	ROUTE	POST MILES TOTAL PROJECT	SHEET No	TOTAL SHEETS
03	Yol	5	0.8/2.5	17	30

REGISTERED CIVIL ENGINEER 03/22/2010 DATE

6-21-10
PLANS APPROVAL DATE

REGISTERED PROFESSIONAL ENGINEER Kyoung Hyeog Lee No. 60714 Exp. 12/31/10 CIVIL STATE OF CALIFORNIA

The State of California or its officers or agents shall not be responsible for the accuracy or completeness of electronic copies of this plan sheet.

Indicates limits of remove 2"± existing AC surfacing, remove unsound concrete, patch with rapid setting concrete, and place new HMA

Indicates existing structure

Indicates location for removal of existing asphaltic plug joint seals, cleaning expansion joints, and placing of new polyester concrete expansion dam and joint seal

* Locations of new 4" Ø drains

** Approximate locations of existing downdrain to be cleaned out

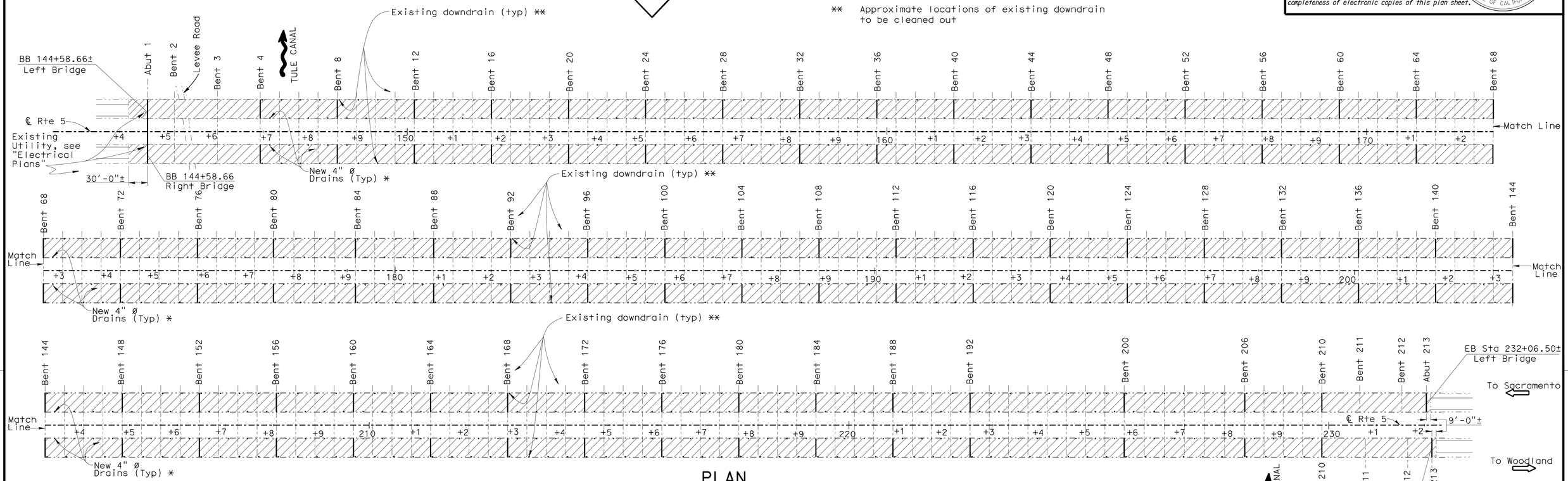

PLAN
1"= 100'

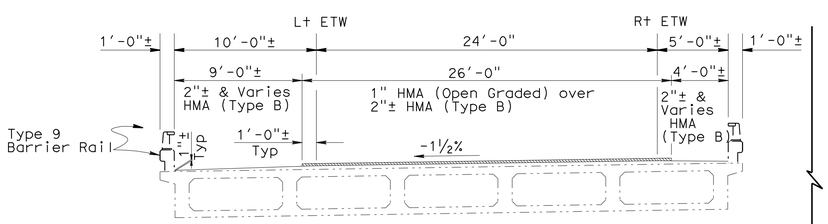

LEFT BRIDGE
(Spans 1,2,3,210,211 & 212)
Right Bridge Similar

Symmetrical about ℄ Rte

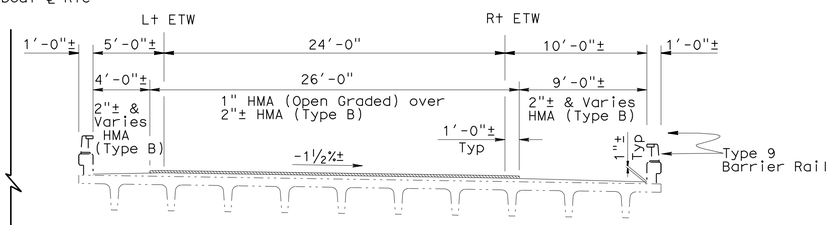

RIGHT BRIDGE
(Span 4 thru span 209)
Left Bridge Similar

TYPICAL SECTION
3/16" = 1'-0"

QUANTITIES

REMOVE ASPHALT CONCRETE SURFACING	686,000	SQFT
REMOVE UNSOUND CONCRETE	7,144	CF
HOT MIX ASPHALT (TYPE B)	7,750	TON
HOT MIX ASPHALT (OPEN GRADED)	2,862	TON
TACK COAT	22	TON
CLEAN EXPANSION JOINT	4,134	LF
RAPID SETTING CONCRETE (PATCH)	7,144	CF
POLYESTER CONCRETE EXPANSION DAM	2,067	CF
INSTALL DECK DRAIN	412	EA
JOINT SEAL (MR 1½")	3,978	LF
JOINT SEAL (MR 2")	156	LF

NOTE:
THE CONTRACTOR SHALL VERIFY ALL CONTROLLING FIELD DIMENSIONS BEFORE ORDERING OR FABRICATING ANY MATERIAL.

X Jeff Sims
DESIGN ENGINEER

	BY	CHECKED
DESIGN	Daniel Sessions	Mahfoud Licha
DETAILS	Jinrong Zhou	Mahfoud Licha
QUANTITIES	Mahfoud Licha	Kyoung Lee

LOAD & RESISTANCE FACTOR DESIGN

	BY	CHECKED
LAYOUT	Jinrong Zhou	Mahfoud Licha
SPECIFICATIONS	Jennifer Holman	PLANS AND SPECS COMPARED Jennifer Holman

ORIGINAL SCALE IN INCHES FOR REDUCED PLANS 0 1 2 3

STATE OF CALIFORNIA
DEPARTMENT OF TRANSPORTATION

DIVISION OF ENGINEERING SERVICES
STRUCTURE DESIGN
DESIGN BRANCH 1

CU 03
EA 3E0701

BRIDGE NO. 22-0124R/L
POST MILE 0.8

YOLO BYPASS DECK OVERLAY AND JOINT SEAL REPL
GENERAL PLAN

DISREGARD PRINTS BEARING EARLIER REVISION DATES

REVISION DATES: 05/01/09 06/01/09 06/09/09 06/15/09 10/01/09 10/05/09 10/21/09 01/21/10 02/11/10 03/11/10

SHEET 1 OF 14

STRUCTURES DESIGN GENERAL PLAN SHEET (ENGLISH) (REV.07-24-06)

FILE => 22-0124r-a-gp01.dgn

USERNAME => trphilis DATE PLOTTED => 24-JUN-2010 TIME PLOTTED => 13:42

DIST	COUNTY	ROUTE	POST MILES TOTAL PROJECT	SHEET No	TOTAL SHEETS
03	Yol	5	0.8/2.5	18	30

REGISTERED CIVIL ENGINEER 03/22/2010 DATE

6-21-10
PLANS APPROVAL DATE

REGISTERED PROFESSIONAL ENGINEER Kyoung Hyeog Lee No. 60714 Exp. 12/31/10 CIVIL STATE OF CALIFORNIA

The State of California or its officers or agents shall not be responsible for the accuracy or completeness of electronic copies of this plan sheet.

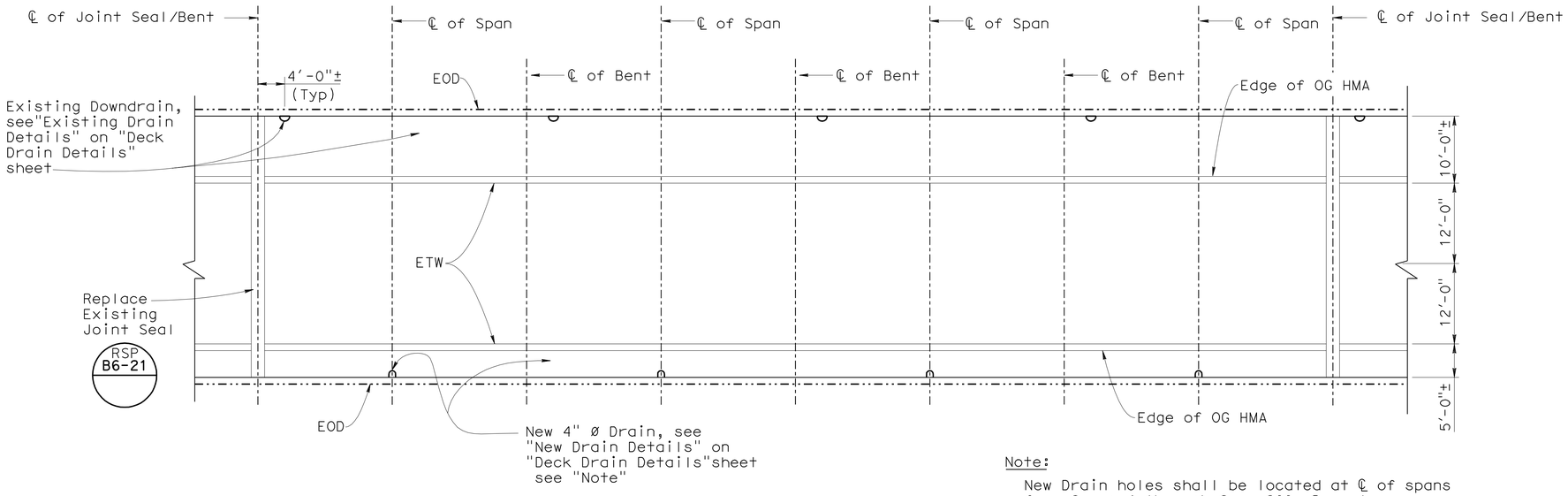

Span 4 Through Span 209

PARTIAL DECK PLAN

1"=10"

Left bridge shown. Right bridge similar

Note:

New Drain holes shall be located at ℄ of spans from Spans 4 through Span 209. Do not core on Spans 1, 2, 3, 210, 211, & 212.

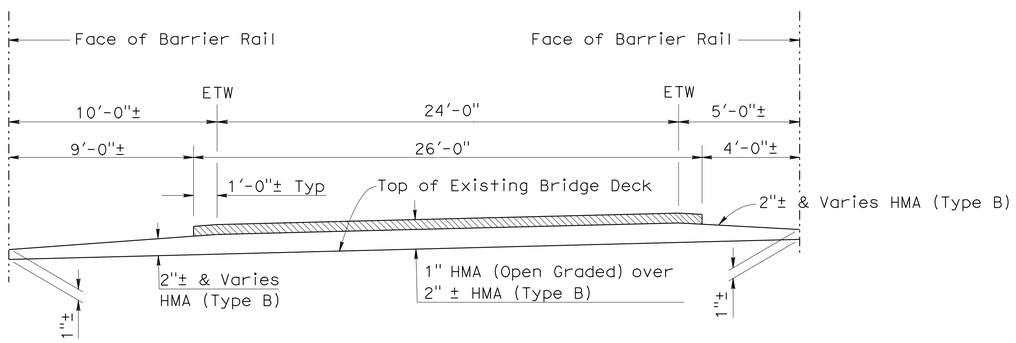

HMA OVERLAY DETAIL

NO SCALE

Left bridge shown. Right bridge similar

Indicates HMA (Open Graded)

NOTE:
THE CONTRACTOR SHALL VERIFY ALL CONTROLLING FIELD DIMENSIONS BEFORE ORDERING OR FABRICATING ANY MATERIAL.

INDEX TO PLANS

SHEET NO	TITLE
1.	GENERAL PLAN
2.	GENERAL DETAILS
3.	DECK DRAIN DETAILS
4.	JOINT SEAL DETAILS
5.	RIGHT BRIDGE PROFILE NO. 1
6.	RIGHT BRIDGE PROFILE NO. 2
7.	RIGHT BRIDGE PROFILE NO. 3
8.	RIGHT BRIDGE PROFILE NO. 4
9.	RIGHT BRIDGE PROFILE NO. 5
10.	LEFT BRIDGE PROFILE NO. 1
11.	LEFT BRIDGE PROFILE NO. 2
12.	LEFT BRIDGE PROFILE NO. 3
13.	LEFT BRIDGE PROFILE NO. 4
14.	LEFT BRIDGE PROFILE NO. 5

STANDARD PLANS DATED MAY 2006

SHEET NO	TITLE
A10A	ACRONYMS AND ABBREVIATIONS
A10B	ACRONYMS AND ABBREVIATIONS
RSP B6-21	JOINT SEAL (MAXIMUM MOVEMENT RATING = 2")

DESIGN	BY Daniel Sessions	CHECKED Mahfoud Licha	
DETAILS	BY Jinrong Zhou/Jie Tang	CHECKED Mahfoud Licha	
QUANTITIES	BY Mahfoud Licha	CHECKED Kyoung Lee	

STATE OF CALIFORNIA
DEPARTMENT OF TRANSPORTATION

DIVISION OF ENGINEERING SERVICES
STRUCTURE DESIGN
DESIGN BRANCH 1

BRIDGE NO. 22-0124R/L
POST MILE 0.8

YOLO BYPASS DECK OVERLAY AND JOINT SEAL REPL

GENERAL DETAILS

STRUCTURES DESIGN DETAIL SHEET (ENGLISH) (REV. 10/25/05)

ORIGINAL SCALE IN INCHES FOR REDUCED PLANS 0 1 2 3

CU 03
EA 3E0701

DISREGARD PRINTS BEARING EARLIER REVISION DATES

REVISION DATES: 10/01/09 10/06/09 10/05/09 10/29/09 02/11/10 03/08/10 03/16/10 03/18/10

SHEET 2 OF 14

FILE => 22-0124r-g-ddet01.dgn

USERNAME => trphtis DATE PLOTTED => 24-JUN-2010 TIME PLOTTED => 13:42

DIST	COUNTY	ROUTE	POST MILES TOTAL PROJECT	SHEET No	TOTAL SHEETS
03	Yol	5	0.8/2.5	19	30

REGISTERED CIVIL ENGINEER 03/22/2010 DATE

6-21-10
PLANS APPROVAL DATE

REGISTERED PROFESSIONAL ENGINEER
Kyoung Hyeog Lee
No. 60714
Exp. 12/31/10
CIVIL
STATE OF CALIFORNIA

The State of California or its officers or agents shall not be responsible for the accuracy or completeness of electronic copies of this plan sheet.

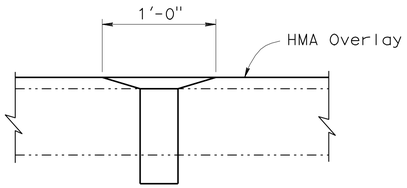

SECTION A-A

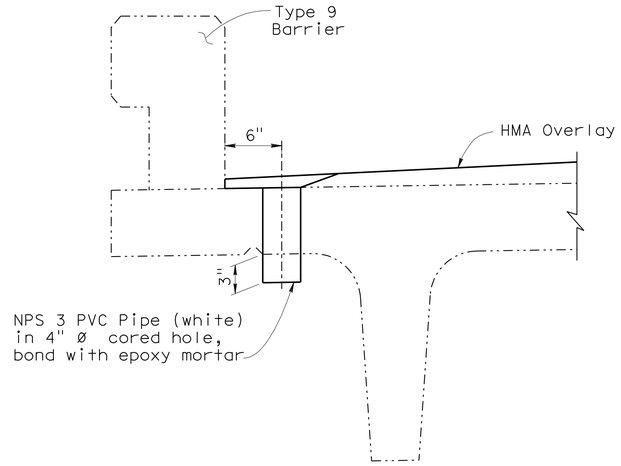

SECTION B-B

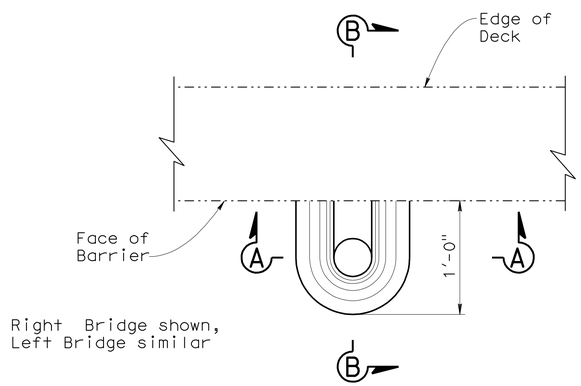

PLAN

NEW DRAIN DETAILS

1½" = 1'-0"

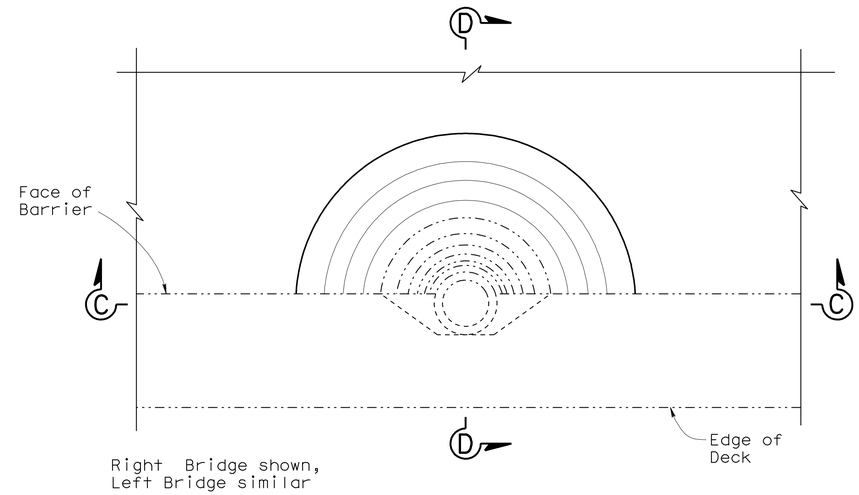

PLAN

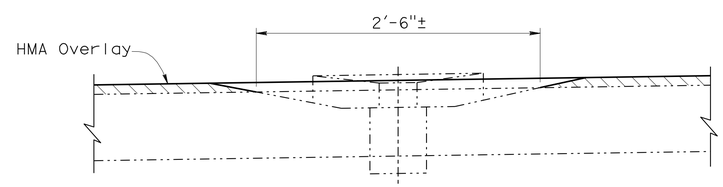

SECTION C-C

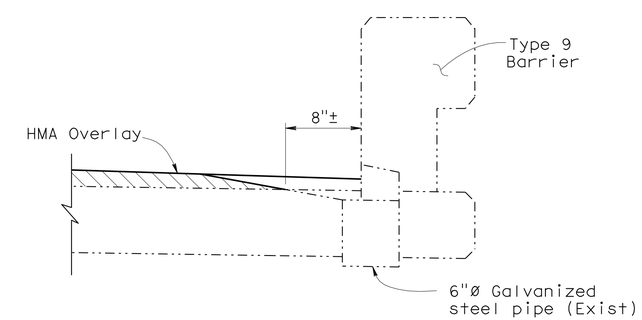

SECTION D-D

EXISTING DOWNDRAIN DETAILS

1½" =1'-0"

NOTE:
THE CONTRACTOR SHALL VERIFY ALL CONTROLLING FIELD DIMENSIONS BEFORE ORDERING OR FABRICATING ANY MATERIAL.

	BY	CHECKED
DESIGN	Daniel Sessions	Mahfoud Licha
DETAILS	Jinrong Zhou/Jie Tang	Mahfoud Licha
QUANTITIES	Mahfoud Licha	Kyoung Lee

STATE OF CALIFORNIA
DEPARTMENT OF TRANSPORTATION

DIVISION OF ENGINEERING SERVICES
STRUCTURE DESIGN
DESIGN BRANCH 1

BRIDGE NO. 22-0124R/L
POST MILE 0.8

YOLO BYPASS DECK OVERLAY AND JOINT SEAL REPL
DECK DRAIN DETAILS

STRUCTURES DESIGN DETAIL SHEET (ENGLISH) (REV. 10/25/05)

ORIGINAL SCALE IN INCHES FOR REDUCED PLANS 0 1 2 3

CU 03
EA 3E0701

DISREGARD PRINTS BEARING EARLIER REVISION DATES

REVISION DATES: 06/04/09 06/16/09 10/06/09 10/06/09 10/29/09 03/18/10

SHEET 3 OF 14

FILE => 22-0124r-r-ddet02.dgn

USERNAME => trphilis DATE PLOTTED => 24-JUN-2010 TIME PLOTTED => 13:43

DIST	COUNTY	ROUTE	POST MILES TOTAL PROJECT	SHEET No	TOTAL SHEETS
03	Yol	5	0.8/2.5	20	30

REGISTERED CIVIL ENGINEER 03/22/2010 DATE

6-21-10
PLANS APPROVAL DATE

REGISTERED PROFESSIONAL ENGINEER Kyoung Hyeog Lee No. 60714 Exp. 12/31/10 CIVIL STATE OF CALIFORNIA

The State of California or its officers or agents shall not be responsible for the accuracy or completeness of electronic copies of this plan sheet.

TYPE B JOINT SEAL TABLE					
Eastbound Bridge Location	Min "MR" (in)	Approx Length (ft)	Eastbound Bridge Location	Min "MR" (in)	Approx Length (ft)
Abut 1	1.5	39	Bent 108	1.5	39
Bent 4	1.5	39	Bent 112	1.5	39
Bent 8	1.5	39	Bent 116	1.5	39
Bent 12	1.5	39	Bent 120	1.5	39
Bent 16	1.5	39	Bent 124	1.5	39
Bent 20	1.5	39	Bent 128	1.5	39
Bent 24	1.5	39	Bent 132	1.5	39
Bent 28	1.5	39	Bent 136	1.5	39
Bent 32	1.5	39	Bent 140	1.5	39
Bent 36	1.5	39	Bent 144	1.5	39
Bent 40	1.5	39	Bent 148	1.5	39
Bent 44	1.5	39	Bent 152	1.5	39
Bent 48	1.5	39	Bent 156	1.5	39
Bent 52	1.5	39	Bent 160	1.5	39
Bent 56	1.5	39	Bent 164	1.5	39
Bent 60	1.5	39	Bent 168	1.5	39
Bent 64	1.5	39	Bent 172	1.5	39
Bent 68	1.5	39	Bent 176	1.5	39
Bent 72	1.5	39	Bent 180	1.5	39
Bent 76	1.5	39	Bent 184	1.5	39
Bent 80	1.5	39	Bent 188	1.5	39
Bent 84	1.5	39	Bent 192	2.0	39
Bent 88	1.5	39	Bent 200	2.0	39
Bent 92	1.5	39	Bent 206	1.5	39
Bent 96	1.5	39	Bent 210	1.5	39
Bent 100	1.5	39	Abut 213	1.5	39
Bent 104	1.5	39			

TYPE B JOINT SEAL TABLE					
Westbound Bridge Location	Min "MR" (in)	Approx Length (ft)	Westbound Bridge Location	Min "MR" (in)	Approx Length (ft)
Abut 1	1.5	39	Bent 108	1.5	39
Bent 4	1.5	39	Bent 112	1.5	39
Bent 8	1.5	39	Bent 116	1.5	39
Bent 12	1.5	39	Bent 120	1.5	39
Bent 16	1.5	39	Bent 124	1.5	39
Bent 20	1.5	39	Bent 128	1.5	39
Bent 24	1.5	39	Bent 132	1.5	39
Bent 28	1.5	39	Bent 136	1.5	39
Bent 32	1.5	39	Bent 140	1.5	39
Bent 36	1.5	39	Bent 144	1.5	39
Bent 40	1.5	39	Bent 148	1.5	39
Bent 44	1.5	39	Bent 152	1.5	39
Bent 48	1.5	39	Bent 156	1.5	39
Bent 52	1.5	39	Bent 160	1.5	39
Bent 56	1.5	39	Bent 164	1.5	39
Bent 60	1.5	39	Bent 168	1.5	39
Bent 64	1.5	39	Bent 172	1.5	39
Bent 68	1.5	39	Bent 176	1.5	39
Bent 72	1.5	39	Bent 180	1.5	39
Bent 76	1.5	39	Bent 184	1.5	39
Bent 80	1.5	39	Bent 188	1.5	39
Bent 84	1.5	39	Bent 192	2.0	39
Bent 88	1.5	39	Bent 200	2.0	39
Bent 92	1.5	39	Bent 206	1.5	39
Bent 96	1.5	39	Bent 210	1.5	39
Bent 100	1.5	39	Abut 213	1.5	39
Bent 104	1.5	39			

Joint Seal Type B:

1. Seal must satisfy both minimun Movement Rating (MR) and minimum W1 requirements.
2. Minimum W1 is the calculated maximum width of the joint based on field measurements. After the joints have been cleaned, minimum W1 is to be calculated by the Engineer.
3. W1 shall be the smaller of the values determined as follows:
   A) 0.85 times the manufacturer's designed minimum uncompressed width of the seal.
   B) The width of the seal on the third successive test cycle of the pressure deflection test, when copmressed to an average pressure of 3 psi.
4. Bend Type B Joint Seal 6" up into curb or rail on the low side of the deck where deck joint matches curb or rail joint.
5. For details not shown see RSP B6-21

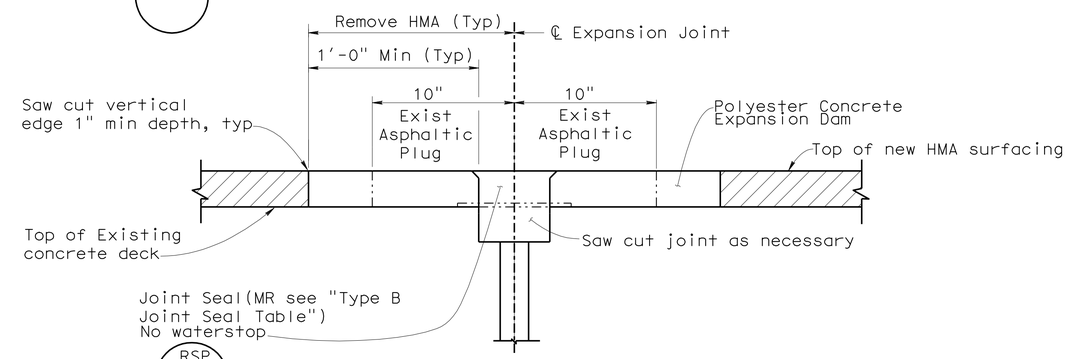

RSP B6-21

JOINT SEAL DETAIL
NO SCALE

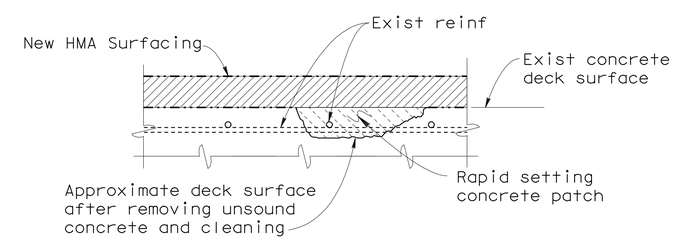

DECK REPAIR DETAIL
NO SCALE
Reinforcement may be encountered during deck concrete removal. (See Note 3)

Notes:

1. All joint seal locations do not have waterstop and approximate depth of cleaning required at expansion joints is 3 ft from top of existing concrete deck
2. The contractor shall verify all controlling field dimensions before ordering or fabricating any material
3. Approximately 5% of deck area needs to be repaired to approximately 2½" deep. Locations to be determined by the Engineer

DESIGN	BY Daniel Sessions	CHECKED Mahfoud Licha	
DETAILS	BY Jinrong Zhou	CHECKED Mahfoud Licha	
QUANTITIES	BY Mahfoud Licha	CHECKED Kyoung Lee	

STATE OF CALIFORNIA
DEPARTMENT OF TRANSPORTATION

DIVISION OF ENGINEERING SERVICES
STRUCTURE DESIGN
DESIGN BRANCH 1

BRIDGE NO. 22-0124R/L
POST MILE 0.8

YOLO BYPASS DECK OVERLAY AND JOINT SEAL REPL

JOINT SEAL DETAILS

STRUCTURES DESIGN DETAIL SHEET (ENGLISH) (REV. 10/25/05)

ORIGINAL SCALE IN INCHES FOR REDUCED PLANS 0 1 2 3

CU 03
EA 3E0701

DISREGARD PRINTS BEARING EARLIER REVISION DATES

REVISION DATES 06/01/09 06/09/09 10/01/09 10/06/09 10/28/09 10/30/09 02/11/10 03/16/10 03/18/10 03/22/10

SHEET 4 OF 14

FILE => 22-0124r-r-jotdt03.dgn

USERNAME => trphtis DATE PLOTTED => 24-JUN-2010 TIME PLOTTED => 13:43

DIST	COUNTY	ROUTE	POST MILES TOTAL PROJECT	SHEET No	TOTAL SHEETS
03	Yol	5	0.8/2.5	21	30

REGISTERED CIVIL ENGINEER 03/22/2010 DATE

6-21-10
PLANS APPROVAL DATE

REGISTERED PROFESSIONAL ENGINEER
Kyoung Hyeog Lee
No. 60714
Exp. 12/31/10
CIVIL
STATE OF CALIFORNIA

The State of California or its officers or agents shall not be responsible for the accuracy or completeness of electronic copies of this plan sheet.

Notes:

1. Existing deck elevations are based on survey data from 1980 contract. Engineer shall verify current deck elevations.
2. Profile grades of Lt and Rt ETW are elevations at top of Type B HMA. Final grade may be adjusted by Engineer based on survey data.
3. Existing Lt and Rt ETW are elevations at top of concrete bridge deck.

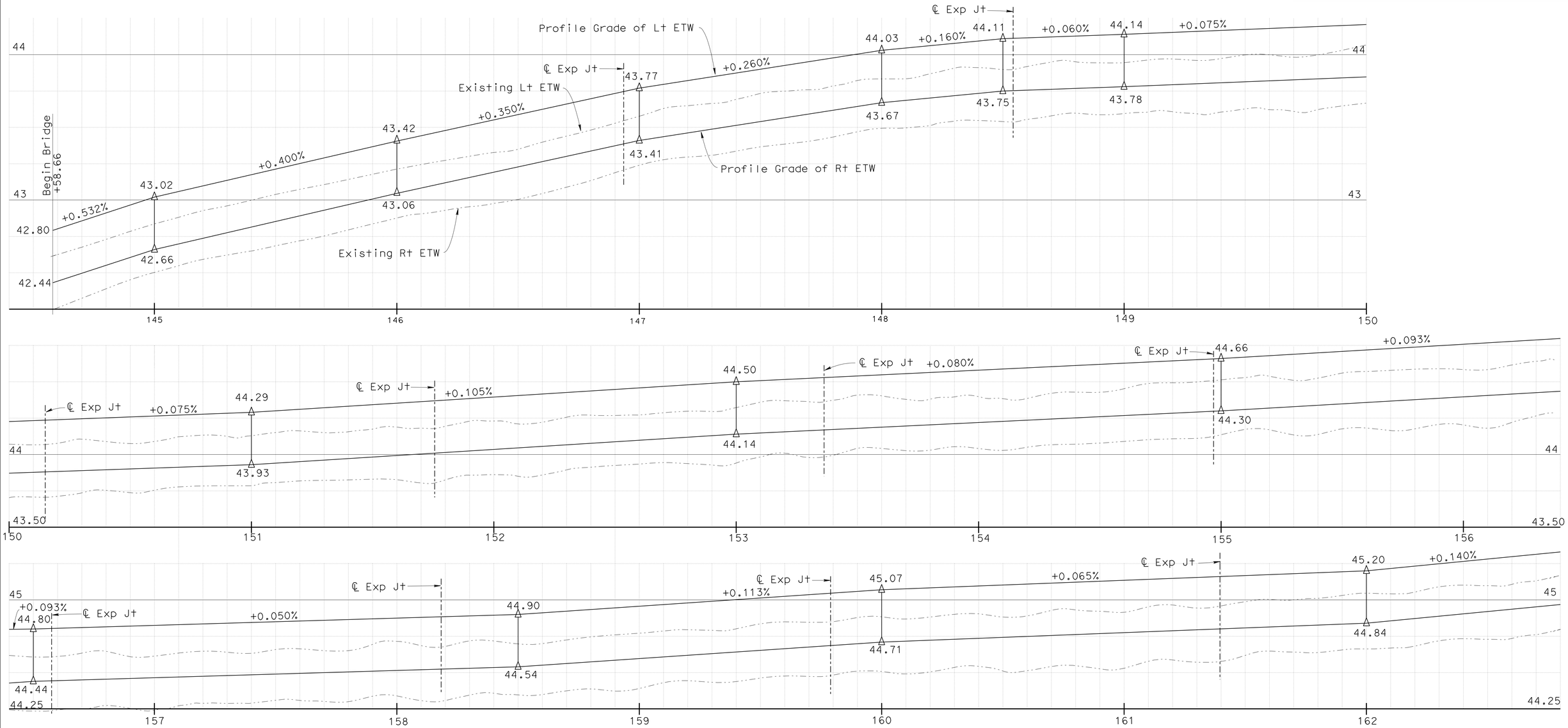

BRIDGE PROFILE

Vert 3" = 1'
Horiz 1" = 20'

DESIGN	BY Daniel Sessions	CHECKED Mahfoud Licha	
DETAILS	BY Jinrong Zhou	CHECKED Mahfoud Licha	
QUANTITIES	BY Mahfoud Licha	CHECKED Kyoung Lee	

STATE OF CALIFORNIA
DEPARTMENT OF TRANSPORTATION

DIVISION OF ENGINEERING SERVICES
STRUCTURE DESIGN
DESIGN BRANCH 1

BRIDGE NO. 22-0124R/L
POST MILE 0.8

YOLO BYPASS DECK OVERLAY AND JOINT SEAL REPL

RIGHT BRIDGE PROFILE NO. 1

STRUCTURES DESIGN DETAIL SHEET (ENGLISH) (REV. 10/25/05)

ORIGINAL SCALE IN INCHES FOR REDUCED PLANS 0 1 2 3

CU 03
EA 3E0701

DISREGARD PRINTS BEARING EARLIER REVISION DATES

REVISION DATES 02/26/10 03/15/10 03/17/10 03/22/10

SHEET 5 OF 14

FILE => 22-0124r-s-briprodt01.dgn

USERNAME => trphils DATE PLOTTED => 24-JUN-2010 TIME PLOTTED => 13:43

DIST	COUNTY	ROUTE	POST MILES TOTAL PROJECT	SHEET No	TOTAL SHEETS
03	Yol	5	0.8/2.5	22	30

REGISTERED CIVIL ENGINEER 03/22/2010 DATE

6-21-10
PLANS APPROVAL DATE

REGISTERED PROFESSIONAL ENGINEER
Kyoung Hyeog Lee
No. 60714
Exp. 12/31/10
CIVIL
STATE OF CALIFORNIA

The State of California or its officers or agents shall not be responsible for the accuracy or completeness of electronic copies of this plan sheet.

Notes:

1. Existing deck elevations are based on survey data from 1980 contract. Engineer shall verify current deck elevations.
2. Profile grades of Lt and Rt ETW are elevations at top of Type B HMA. Final grade may be adjusted by Engineer based on survey data.
3. Existing Lt and Rt ETW are elevations at top of concrete bridge deck.

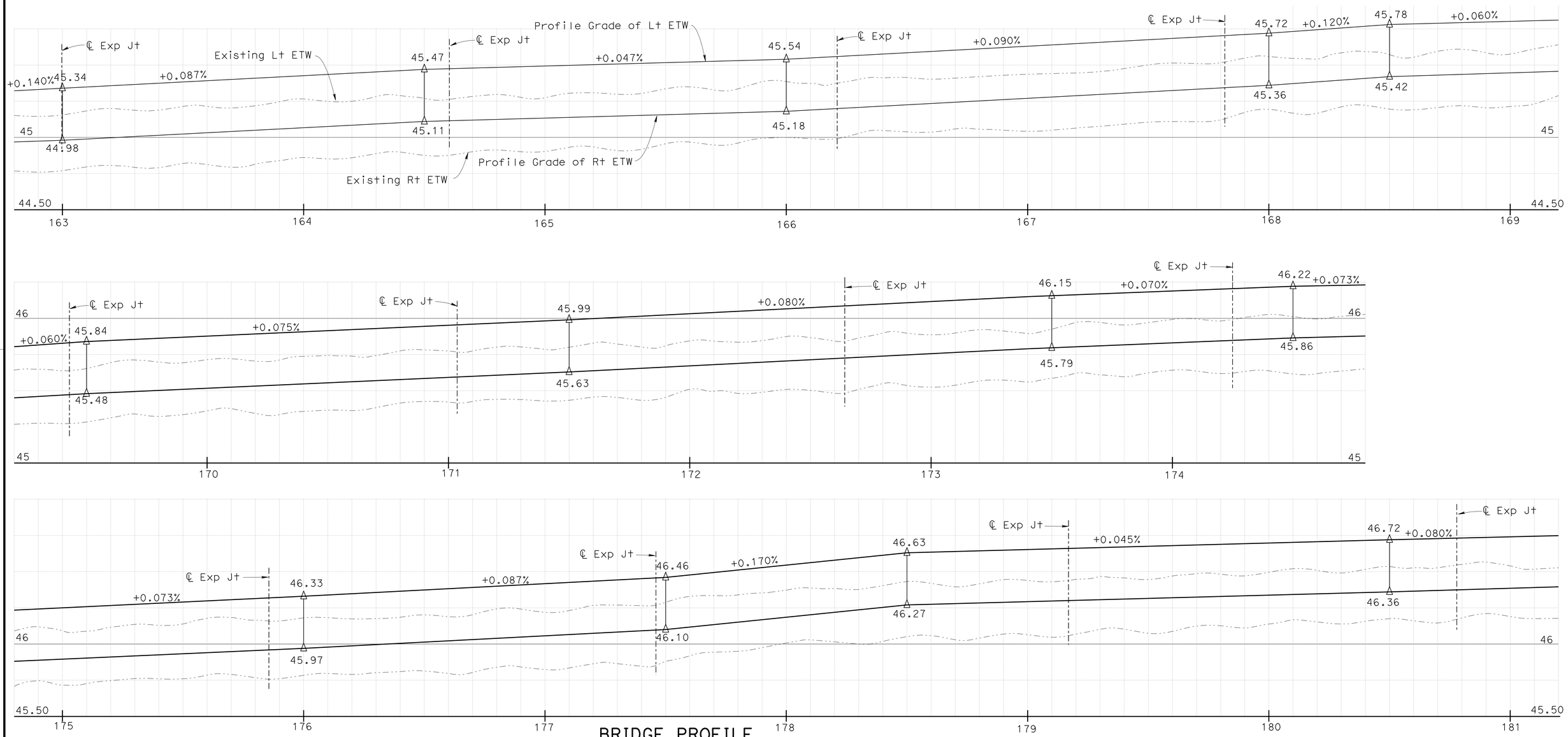

BRIDGE PROFILE

Vert 3" = 1'
Horiz 1" = 20'

	BY	CHECKED
DESIGN	Daniel Sessions	Mahfoud Licha
DETAILS	Jinrong Zhou	Mahfoud Licha
QUANTITIES	Mahfoud Licha	Kyoung Lee

STATE OF CALIFORNIA
DEPARTMENT OF TRANSPORTATION

DIVISION OF ENGINEERING SERVICES
STRUCTURE DESIGN
DESIGN BRANCH 1

BRIDGE NO. 22-0124R/L
POST MILE 0.8

YOLO BYPASS DECK OVERLAY AND JOINT SEAL REPL
RIGHT BRIDGE PROFILE NO. 2

STRUCTURES DESIGN DETAIL SHEET (ENGLISH) (REV. 10/25/05)

ORIGINAL SCALE IN INCHES FOR REDUCED PLANS 0 1 2 3

CU 03
EA 3E0701

DISREGARD PRINTS BEARING EARLIER REVISION DATES → 02/26/10 03/15/10 03/22/10

REVISION DATES

SHEET 6 OF 14

FILE => 22-0124r-s-briprodt02.dgn

USERNAME => trphils DATE PLOTTED => 24-JUN-2010 TIME PLOTTED => 13:43

DIST	COUNTY	ROUTE	POST MILES TOTAL PROJECT	SHEET No	TOTAL SHEETS
03	Yol	5	0.8/2.5	23	30

REGISTERED CIVIL ENGINEER 03/22/2010 DATE

6-21-10
PLANS APPROVAL DATE

REGISTERED PROFESSIONAL ENGINEER
Kyoung Hyeog Lee
No. 60714
Exp. 12/31/10
CIVIL
STATE OF CALIFORNIA

The State of California or its officers or agents shall not be responsible for the accuracy or completeness of electronic copies of this plan sheet.

Notes:

1. Existing deck elevations are based on survey data from 1980 contract. Engineer shall verify current deck elevations.
2. Profile grades of Lt and Rt ETW are elevations at top of Type B HMA. Final grade may be adjusted by Engineer based on survey data.
3. Existing Lt and Rt ETW are elevations at top of concrete bridge deck.

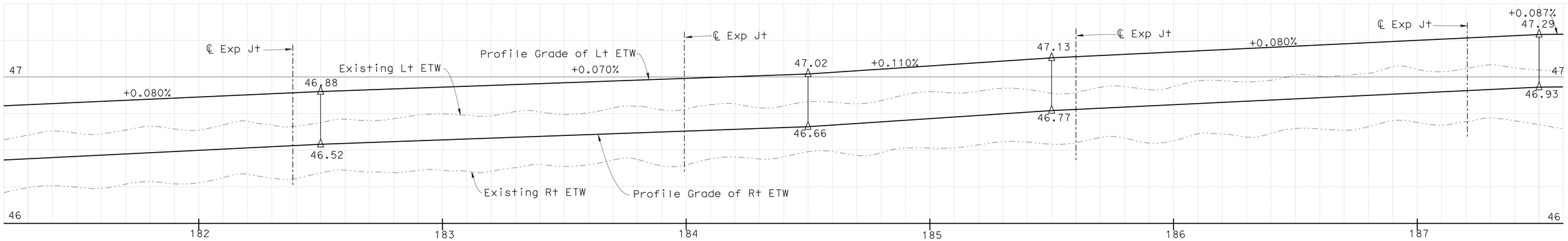

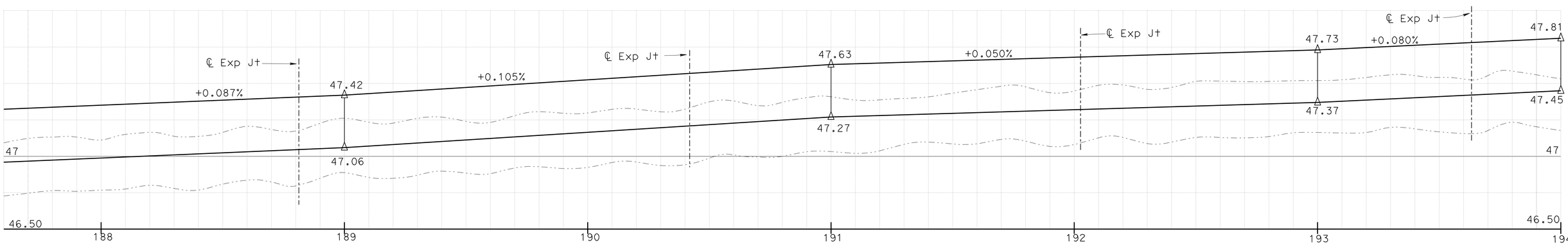

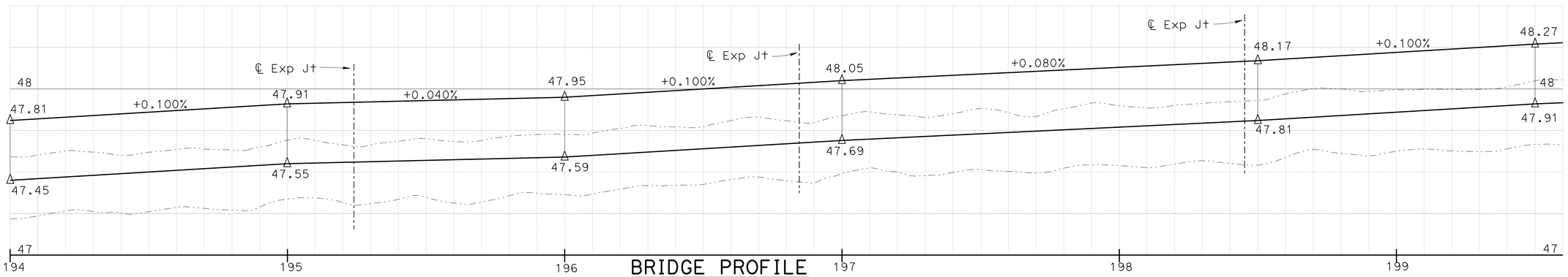

BRIDGE PROFILE

Vert 3" = 1'
Horiz 1" = 20'

	BY	CHECKED
DESIGN	Daniel Sessions	Mahfoud Licha
DETAILS	Jinrong Zhou	Mahfoud Licha
QUANTITIES	Mahfoud Licha	Kyoung Lee

STATE OF CALIFORNIA
DEPARTMENT OF TRANSPORTATION

DIVISION OF ENGINEERING SERVICES
STRUCTURE DESIGN
DESIGN BRANCH 1

BRIDGE NO. 22-0124R/L
POST MILE 0.8

YOLO BYPASS DECK OVERLAY AND JOINT SEAL REPL
RIGHT BRIDGE PROFILE NO. 3

STRUCTURES DESIGN DETAIL SHEET (ENGLISH) (REV. 10/25/05)

ORIGINAL SCALE IN INCHES FOR REDUCED PLANS 0 1 2 3

CU 03
EA 3E0701

DISREGARD PRINTS BEARING EARLIER REVISION DATES → 02/26/10 03/15/10 03/22/10

REVISION DATES

SHEET 7 OF 14

FILE => 22-0124r-s-briprodt03.dgn

USERNAME => trphilis DATE PLOTTED => 24-JUN-2010 TIME PLOTTED => 13:43

DIST	COUNTY	ROUTE	POST MILES TOTAL PROJECT	SHEET No	TOTAL SHEETS
03	Yol	5	0.8/2.5	24	30

REGISTERED CIVIL ENGINEER 03/22/2010 DATE

6-21-10
PLANS APPROVAL DATE

REGISTERED PROFESSIONAL ENGINEER Kyoung Hyeog Lee No. 60714 Exp. 12/31/10 CIVIL STATE OF CALIFORNIA

The State of California or its officers or agents shall not be responsible for the accuracy or completeness of electronic copies of this plan sheet.

Notes:

1. Existing deck elevations are based on survey data from 1980 contract. Engineer shall verify current deck elevations.
2. Profile grades of Lt and Rt ETW are elevations at top of Type B HMA. Final grade may be adjusted by Engineer based on survey data.
3. Existing Lt and Rt ETW are elevations at top of concrete bridge deck.

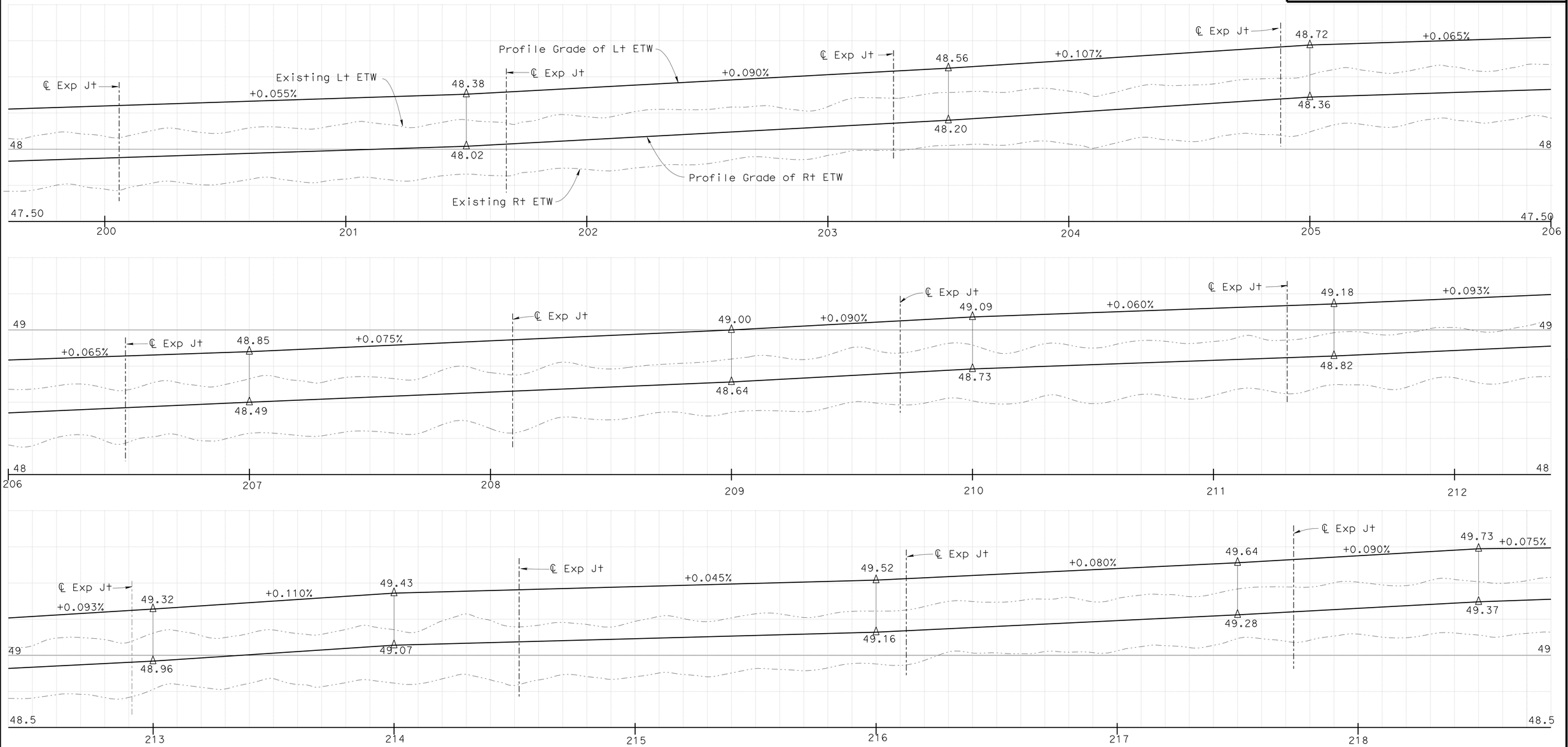

DESIGN	BY Daniel Sessions	CHECKED Mahfoud Licha	
DETAILS	BY Jinrong Zhou	CHECKED Mahfoud Licha	
QUANTITIES	BY Mahfoud Licha	CHECKED Kyoung Lee	

STATE OF CALIFORNIA
DEPARTMENT OF TRANSPORTATION

DIVISION OF ENGINEERING SERVICES
STRUCTURE DESIGN
DESIGN BRANCH 1

BRIDGE NO. 22-0124R/L
POST MILE 0.8

YOLO BYPASS DECK OVERLAY AND JOINT SEAL REPL
RIGHT BRIDGE PROFILE NO. 4

STRUCTURES DESIGN DETAIL SHEET (ENGLISH) (REV. 10/25/05)

ORIGINAL SCALE IN INCHES FOR REDUCED PLANS 0 1 2 3

CU 03
EA 3E0701

DISREGARD PRINTS BEARING EARLIER REVISION DATES

REVISION DATES: 02/26/10 03/15/10 03/22/10

SHEET 8 OF 14

FILE => 22-0124r-s-briprodt04.dgn

USERNAME => trphillis DATE PLOTTED => 24-JUN-2010 TIME PLOTTED => 13:43

DIST	COUNTY	ROUTE	POST MILES TOTAL PROJECT	SHEET No	TOTAL SHEETS
03	Yol	5	0.8/2.5	25	30

REGISTERED CIVIL ENGINEER 03/22/2010 DATE

6-21-10
PLANS APPROVAL DATE

REGISTERED PROFESSIONAL ENGINEER
Kyoung Hyeog Lee
No. 60714
Exp. 12/31/10
CIVIL
STATE OF CALIFORNIA

The State of California or its officers or agents shall not be responsible for the accuracy or completeness of electronic copies of this plan sheet.

Notes:

1. Existing deck elevations are based on survey data from 1980 contract. Engineer shall verify current deck elevations.
2. Profile grades of Lt and Rt ETW are elevations at top of Type B HMA. Final grade may be adjusted by Engineer based on survey data.
3. Existing Lt and Rt ETW are elevations at top of concrete bridge deck.

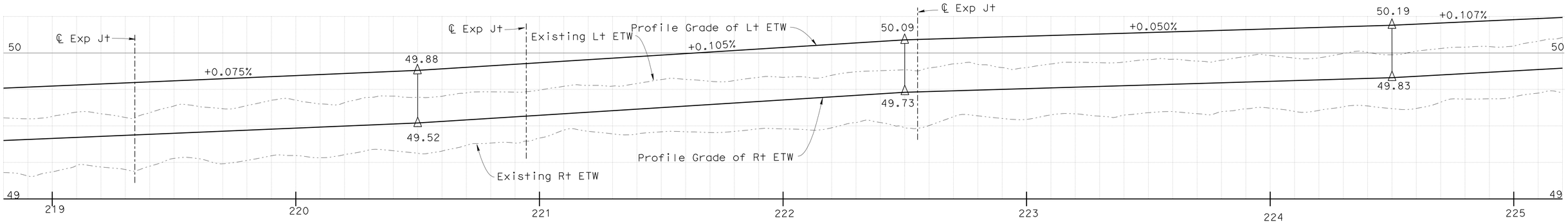

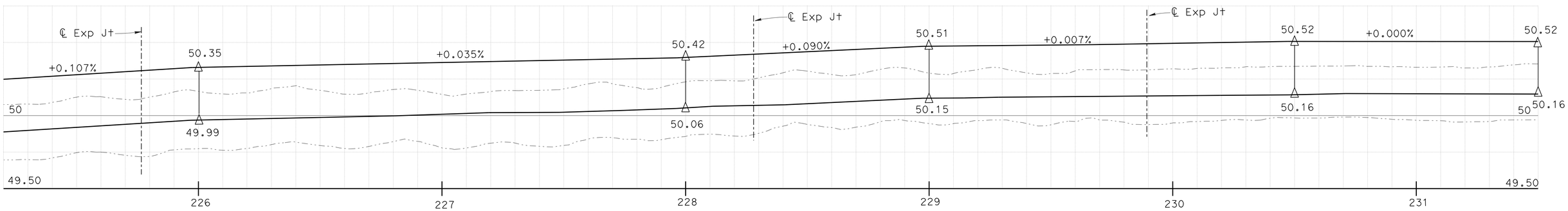

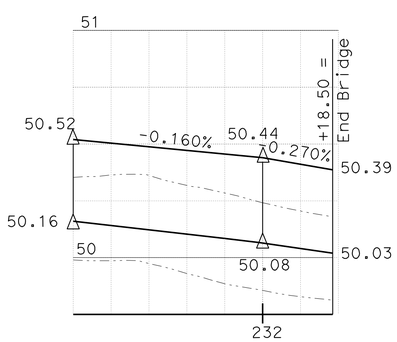

BRIDGE PROFILE

Vert 3" = 1'
Horiz 1" = 20'

DESIGN	BY Daniel Sessions	CHECKED Mahfoud Licha	
DETAILS	BY Jinrong Zhou	CHECKED Mahfoud Licha	
QUANTITIES	BY Mahfoud Licha	CHECKED Kyoung Lee	

STATE OF CALIFORNIA
DEPARTMENT OF TRANSPORTATION

DIVISION OF ENGINEERING SERVICES
STRUCTURE DESIGN
DESIGN BRANCH 1

BRIDGE NO. 22-0124R/L
POST MILE 0.8

YOLO BYPASS DECK OVERLAY AND JOINT SEAL REPL
RIGHT BRIDGE PROFILE NO. 5

STRUCTURES DESIGN DETAIL SHEET (ENGLISH) (REV. 10/25/05)

ORIGINAL SCALE IN INCHES FOR REDUCED PLANS 0 1 2 3

CU 03
EA 3E0701

DISREGARD PRINTS BEARING EARLIER REVISION DATES → 02/26/10 03/15/10 03/22/10

REVISION DATES

SHEET 9 OF 14

FILE => 22-0124r-s-briprodt05.dgn

USERNAME => trphilis DATE PLOTTED => 24-JUN-2010 TIME PLOTTED => 13:43

DIST	COUNTY	ROUTE	POST MILES TOTAL PROJECT	SHEET No	TOTAL SHEETS
03	Yol	5	0.8/2.5	26	30

REGISTERED CIVIL ENGINEER 03/22/2010 DATE

6-21-10
PLANS APPROVAL DATE

REGISTERED PROFESSIONAL ENGINEER
Kyoung Hyeog Lee
No. 60714
Exp. 12/31/10
CIVIL
STATE OF CALIFORNIA

The State of California or its officers or agents shall not be responsible for the accuracy or completeness of electronic copies of this plan sheet.

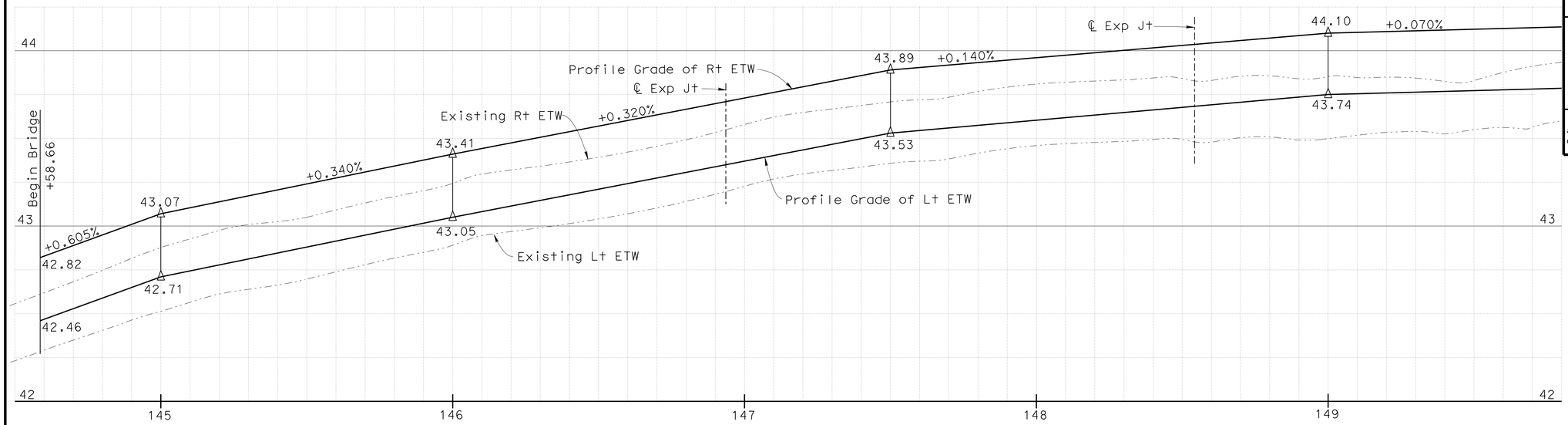

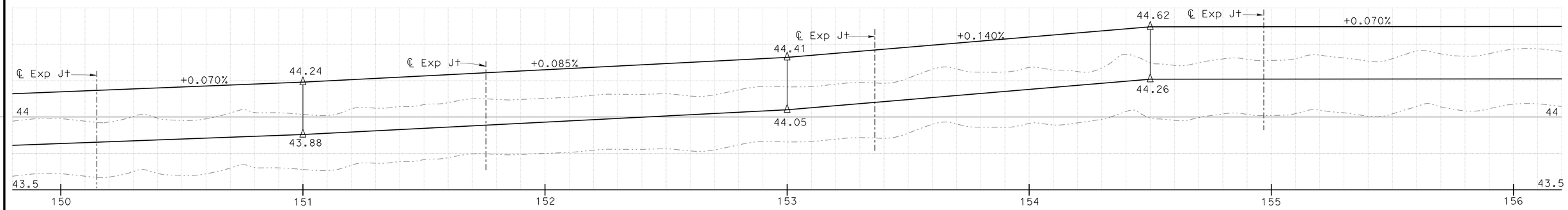

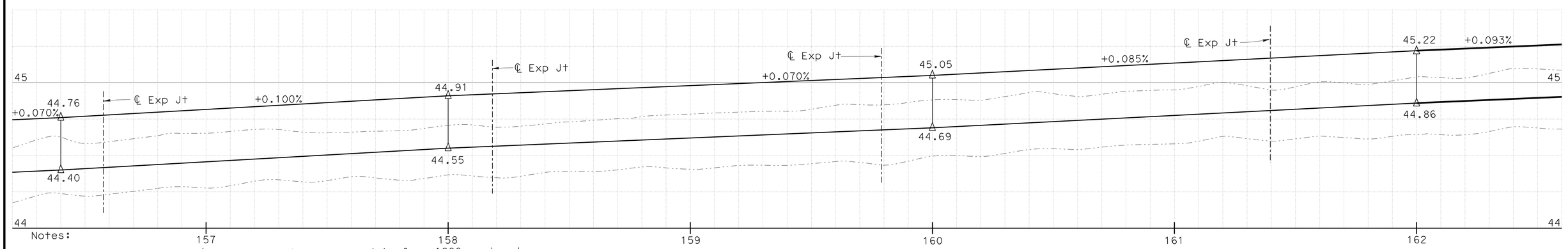

Notes:

1. Existing deck elevations are based on survey data from 1980 contract. Engineer shall verify current deck elevations.
2. Profile grades of Lt and Rt ETW are elevations at top of Type B HMA. Final grade may be adjusted by Engineer based on survey data
3. Existing Lt and Rt ETW are elevations at top of concrete bridge deck.

BRIDGE PROFILE

Vert 3" = 1'
Horiz 1" = 20'

DESIGN	BY Daniel Sessions	CHECKED Mahfoud Licha	
DETAILS	BY Jinrong Zhou	CHECKED Mahfoud Licha	
QUANTITIES	BY Mahfoud Licha	CHECKED Kyoung Lee	

STATE OF CALIFORNIA
DEPARTMENT OF TRANSPORTATION

DIVISION OF ENGINEERING SERVICES
STRUCTURE DESIGN
DESIGN BRANCH 1

BRIDGE NO. 22-0124R/L
POST MILE 0.8

YOLO BYPASS DECK OVERLAY AND JOINT SEAL REPL

LEFT BRIDGE PROFILE NO. 1

CU 03
EA 3E0701

DISREGARD PRINTS BEARING EARLIER REVISION DATES

REVISION DATES: 03/19/10 03/19/10 03/22/10

SHEET 10 OF 14

ORIGINAL SCALE IN INCHES FOR REDUCED PLANS 0 1 2 3

STRUCTURES DESIGN DETAIL SHEET (ENGLISH) (REV. 10/25/05)

FILE => 22-0124r-s-briprodt06.dgn

USERNAME => trphtlis DATE PLOTTED => 24-JUN-2010 TIME PLOTTED => 13:43

DIST	COUNTY	ROUTE	POST MILES TOTAL PROJECT	SHEET No	TOTAL SHEETS
03	Yol	5	0.8/2.5	27	30

REGISTERED CIVIL ENGINEER 03/22/2010 DATE

6-21-10
PLANS APPROVAL DATE

REGISTERED PROFESSIONAL ENGINEER
Kyoung Hyeog Lee
No. 60714
Exp. 12/31/10
CIVIL
STATE OF CALIFORNIA

The State of California or its officers or agents shall not be responsible for the accuracy or completeness of electronic copies of this plan sheet.

Notes:

1. Existing deck elevations are based on survey data from 1980 contract. Engineer shall verify current deck elevations.
2. Profile grades of Lt and Rt ETW are elevations at top of Type B HMA. Final grade may be adjusted by Engineer based on survey data
3. Existing Lt and Rt ETW are elevations at top of concrete bridge deck.

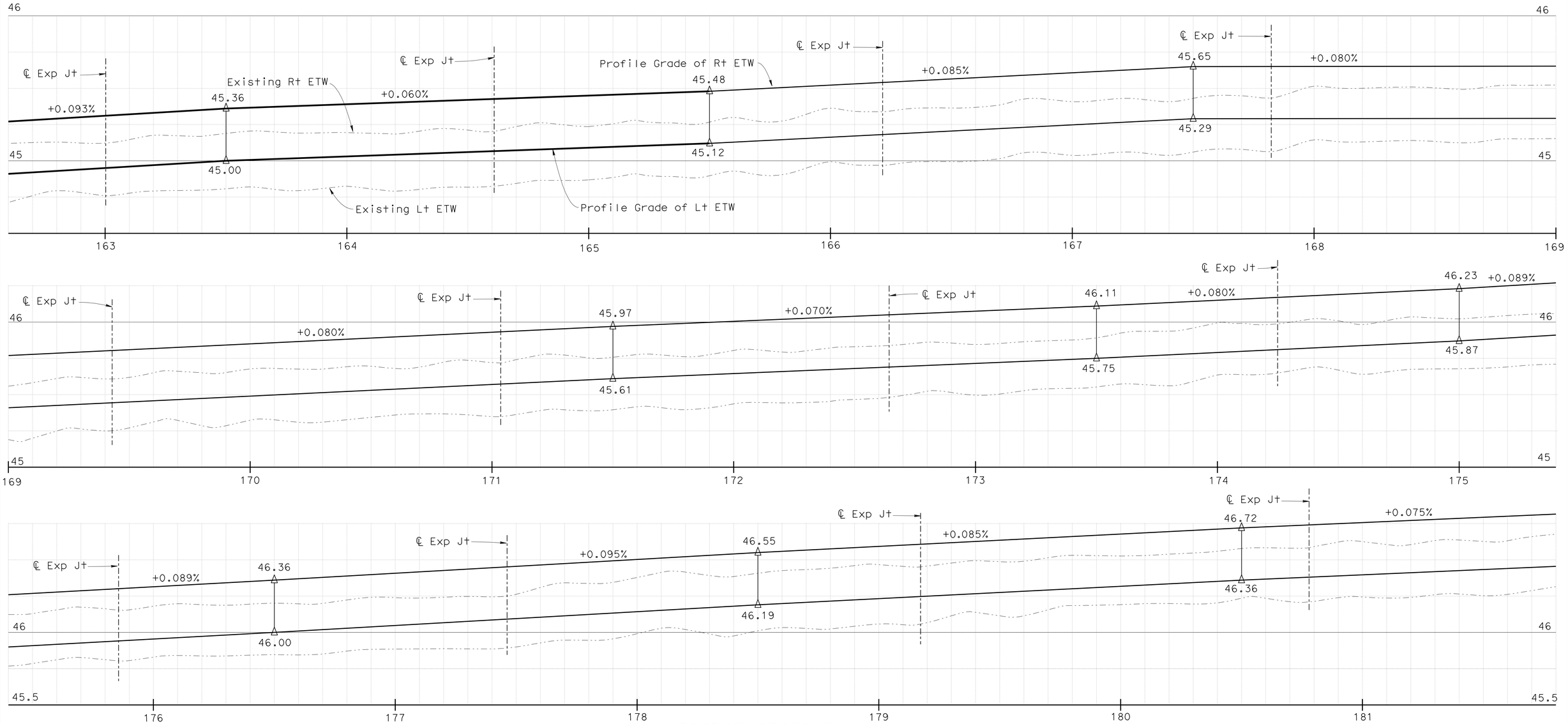

BRIDGE PROFILE

Vert 3" = 1'
Horiz 1" = 20'

DESIGN	BY Daniel Sessions	CHECKED Mahfoud Licha	
DETAILS	BY Jinrong Zhou	CHECKED Mahfoud Licha	
QUANTITIES	BY Mahfoud Licha	CHECKED Kyoung Lee	

STATE OF CALIFORNIA
DEPARTMENT OF TRANSPORTATION

DIVISION OF ENGINEERING SERVICES
STRUCTURE DESIGN
DESIGN BRANCH 1

BRIDGE NO. 22-0124R/L
POST MILE 0.8

YOLO BYPASS DECK OVERLAY AND JOINT SEAL REPL
LEFT BRIDGE PROFILE NO. 2

STRUCTURES DESIGN DETAIL SHEET (ENGLISH) (REV. 10/25/05)

ORIGINAL SCALE IN INCHES FOR REDUCED PLANS 0 1 2 3

CU 03
EA 3E0701

DISREGARD PRINTS BEARING EARLIER REVISION DATES

REVISION DATES 03/19/10 03/18/10 03/22/10

SHEET 11 OF 14

FILE => 22-0124r-s-briprodt07.dgn

USERNAME => trphils DATE PLOTTED => 24-JUN-2010 TIME PLOTTED => 13:44

DIST	COUNTY	ROUTE	POST MILES TOTAL PROJECT	SHEET No	TOTAL SHEETS
03	Yol	5	0.8/2.5	28	30

REGISTERED CIVIL ENGINEER 03/22/2010 DATE

6-21-10
PLANS APPROVAL DATE

REGISTERED PROFESSIONAL ENGINEER
Kyoung Hyeog Lee
No. 60714
Exp. 12/31/10
CIVIL
STATE OF CALIFORNIA

The State of California or its officers or agents shall not be responsible for the accuracy or completeness of electronic copies of this plan sheet.

Notes:

1. Existing deck elevations are based on survey data from 1980 contract. Engineer shall verify current deck elevations.
2. Profile grades of Lt and Rt ETW are elevations at top of Type B HMA. Final grade may be adjusted by Engineer based on survey data
3. Existing Lt and Rt ETW are elevations at top of concrete bridge deck.

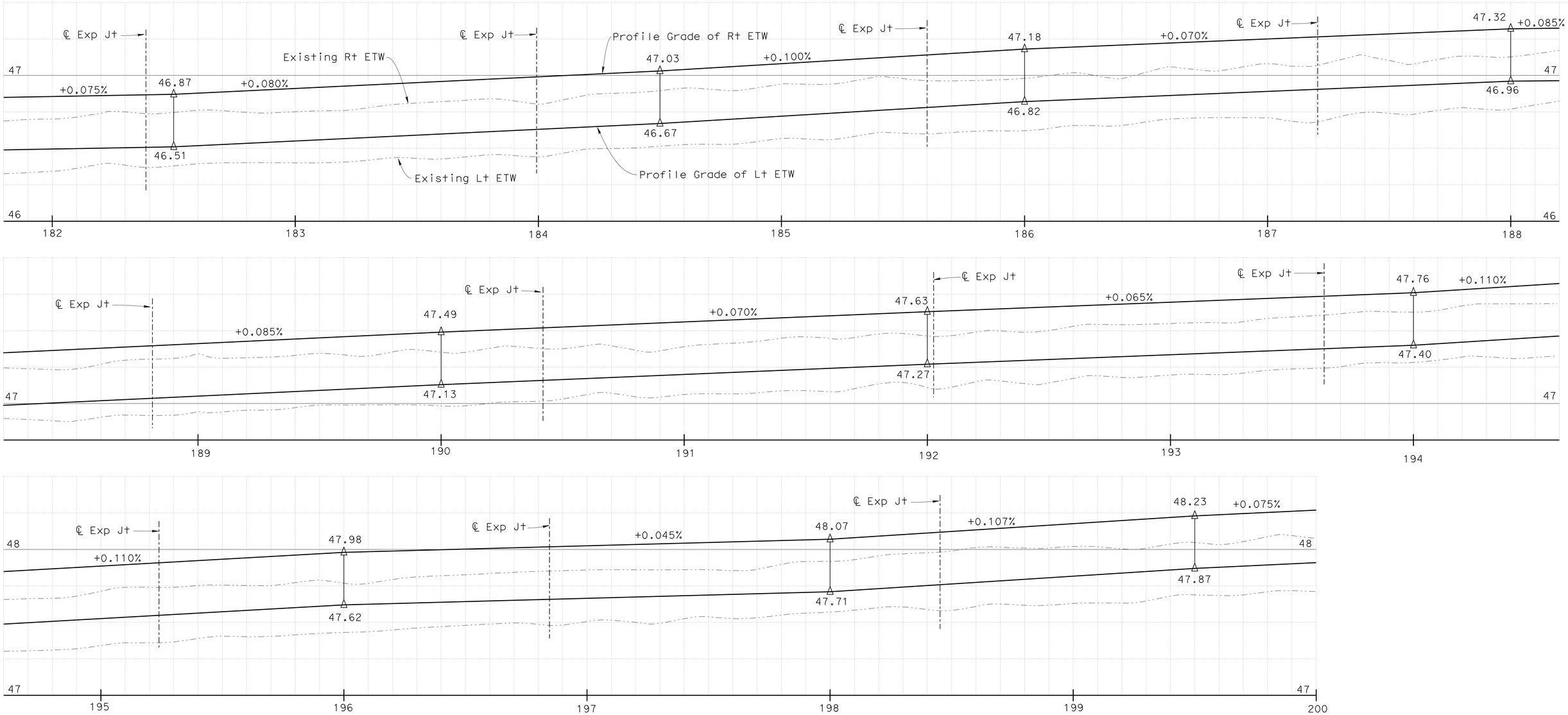

BRIDGE PROFILE

Vert 3" = 1'
Horiz 1" = 20'

DESIGN	BY Daniel Sessions	CHECKED Mahfoud Licha	
DETAILS	BY Jinrong Zhou	CHECKED Mahfoud Licha	
QUANTITIES	BY Mahfoud Licha	CHECKED Kyoung Lee	

STATE OF CALIFORNIA
DEPARTMENT OF TRANSPORTATION

DIVISION OF ENGINEERING SERVICES
STRUCTURE DESIGN
DESIGN BRANCH 1

BRIDGE NO. 22-0124R/L
POST MILE 0.8

YOLO BYPASS DECK OVERLAY AND JOINT SEAL REPL

LEFT BRIDGE PROFILE NO. 3

STRUCTURES DESIGN DETAIL SHEET (ENGLISH) (REV. 10/25/05)

ORIGINAL SCALE IN INCHES FOR REDUCED PLANS 0 1 2 3

CU 03
EA 3E0701

DISREGARD PRINTS BEARING EARLIER REVISION DATES

REVISION DATES 03/11/10 03/18/10 03/22/10

SHEET 12 OF 14

FILE => 22-0124r-s-briprodt08.dgn

USERNAME => trphilis DATE PLOTTED => 24-JUN-2010 TIME PLOTTED => 13:44

DIST	COUNTY	ROUTE	POST MILES TOTAL PROJECT	SHEET No	TOTAL SHEETS
03	Yol	5	0.8/2.5	29	30

REGISTERED CIVIL ENGINEER 03/22/2010 DATE

6-21-10
PLANS APPROVAL DATE

REGISTERED PROFESSIONAL ENGINEER
Kyoung Hyeog Lee
No. 60714
Exp. 12/31/10
CIVIL
STATE OF CALIFORNIA

The State of California or its officers or agents shall not be responsible for the accuracy or completeness of electronic copies of this plan sheet.

Notes:

1. Existing deck elevations are based on survey data from 1980 contract. Engineer shall verify current deck elevations.
2. Profile grades of Lt and Rt ETW are elevations at top of Type B HMA. Final grade may be adjusted by Engineer based on survey data
3. Existing Lt and Rt ETW are elevations at top of concrete bridge deck.

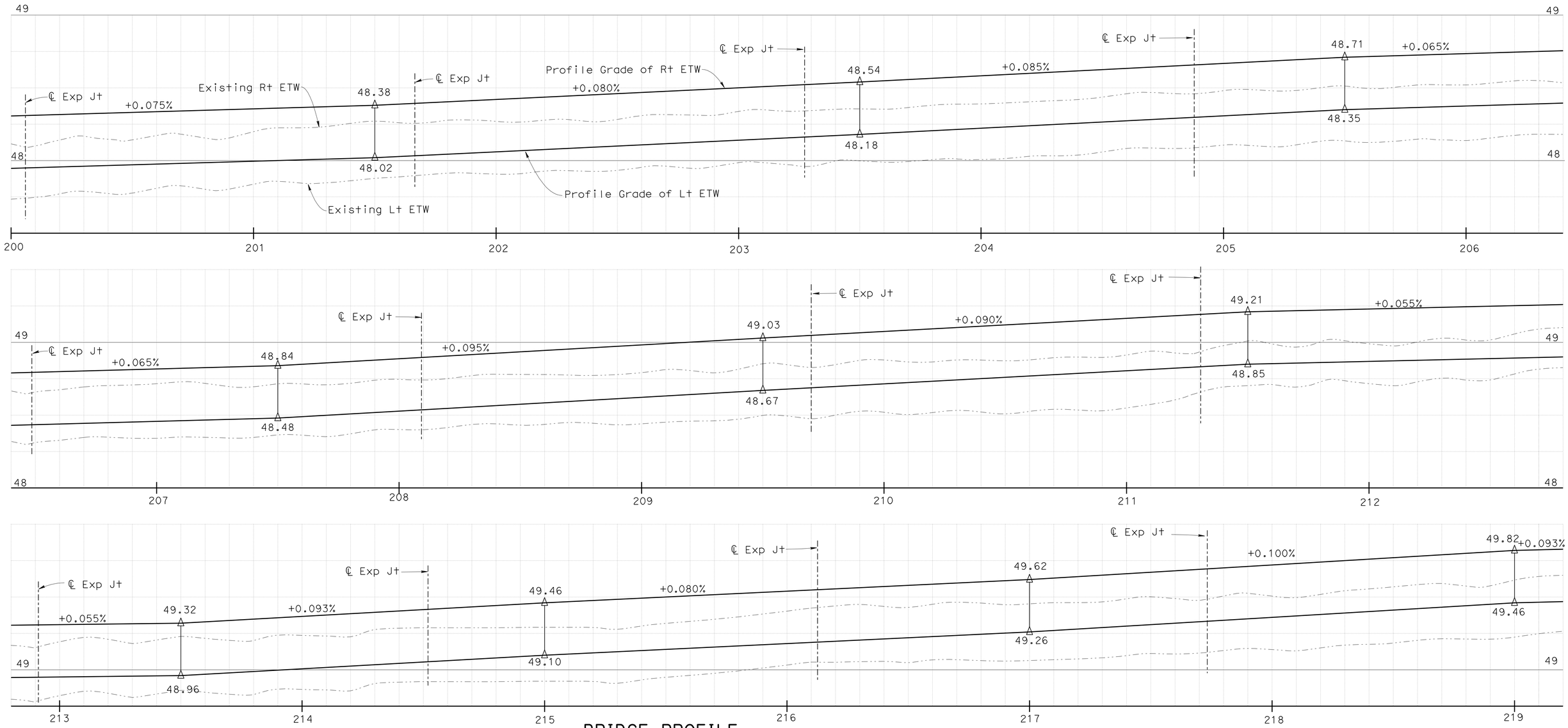

BRIDGE PROFILE

Vert 3" = 1'
Horiz 1" = 20'

DESIGN	BY Daniel Sessions	CHECKED Mahfoud Licha	
DETAILS	BY Jinrong Zhou	CHECKED Mahfoud Licha	
QUANTITIES	BY Mahfoud Licha	CHECKED Kyoung Lee	

STATE OF CALIFORNIA
DEPARTMENT OF TRANSPORTATION

DIVISION OF ENGINEERING SERVICES
STRUCTURE DESIGN
DESIGN BRANCH 1

BRIDGE NO. 22-0124R/L
POST MILE 0.8

YOLO BYPASS DECK OVERLAY AND JOINT SEAL REPL

LEFT BRIDGE PROFILE NO. 4

STRUCTURES DESIGN DETAIL SHEET (ENGLISH) (REV. 10/25/05)

ORIGINAL SCALE IN INCHES FOR REDUCED PLANS 0 1 2 3

CU 03
EA 3E0701

DISREGARD PRINTS BEARING EARLIER REVISION DATES

REVISION DATES: 03/04/10 03/18/10 03/22/10

SHEET 13 OF 14

FILE => 22-0124r-s-briprodt09.dgn

USERNAME => trphilis DATE PLOTTED => 24-JUN-2010 TIME PLOTTED => 13:44

DIST	COUNTY	ROUTE	POST MILES TOTAL PROJECT	SHEET No	TOTAL SHEETS
03	Yol	5	0.8/2.5	30	30

REGISTERED CIVIL ENGINEER 03/22/2010 DATE

6-21-10
PLANS APPROVAL DATE

REGISTERED PROFESSIONAL ENGINEER
Kyoung Hyeog Lee
No. 60714
Exp. 12/31/10
CIVIL
STATE OF CALIFORNIA

The State of California or its officers or agents shall not be responsible for the accuracy or completeness of electronic copies of this plan sheet.

Notes:

1. Existing deck elevations are based on survey data from 1980 contract. Engineer shall verify current deck elevations.
2. Profile grades of Lt and Rt ETW are elevations at top of Type B HMA. Final grade may be adjusted by Engineer based on survey data
3. Existing Lt and Rt ETW are elevations at top of concrete bridge deck.

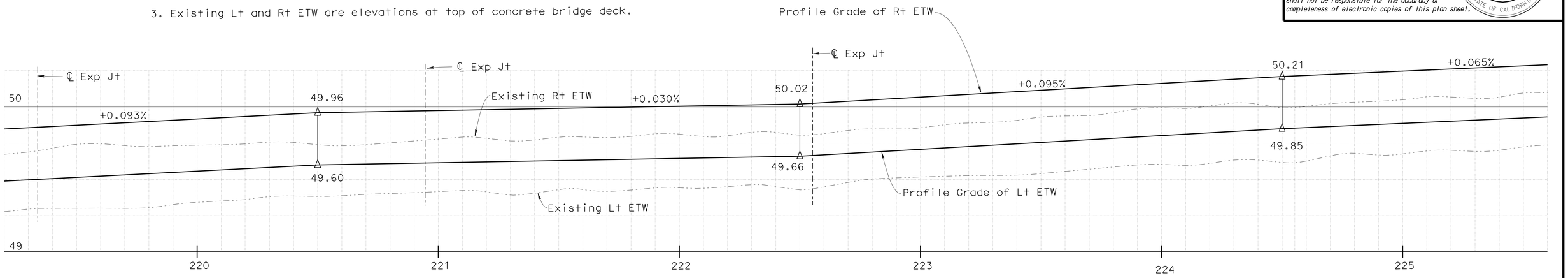

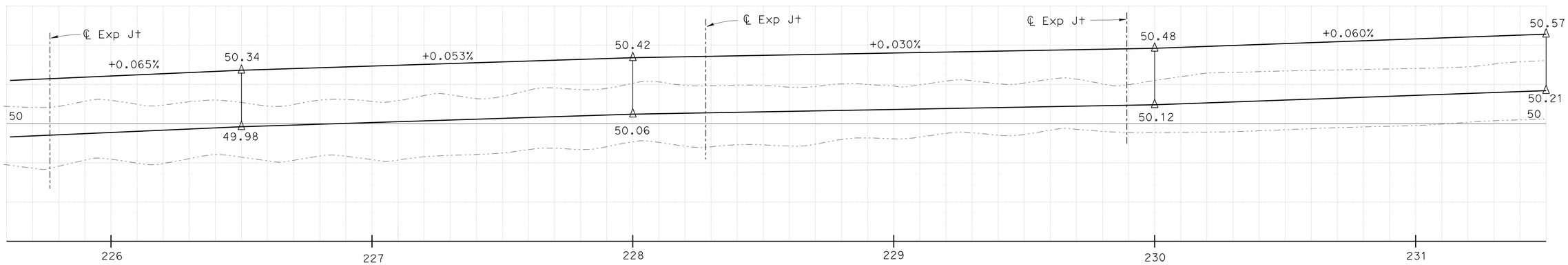

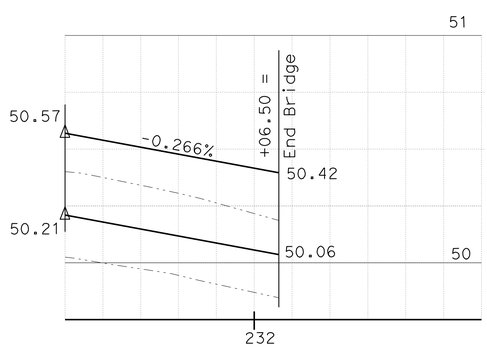

BRIDGE PROFILE

Vert 3" = 1'
Horiz 1" = 20'

DESIGN	BY Daniel Sessions	CHECKED Mahfoud Licha	STATE OF CALIFORNIA DEPARTMENT OF TRANSPORTATION	DIVISION OF ENGINEERING SERVICES STRUCTURE DESIGN DESIGN BRANCH 1	BRIDGE NO. 22-0124R/L
DETAILS	BY Jinrong Zhou	CHECKED Mahfoud Licha			POST MILE 0.8
QUANTITIES	BY Mahfoud Licha	CHECKED Kyoung Lee			

YOLO BYPASS DECK OVERLAY AND JOINT SEAL REPL

LEFT BRIDGE PROFILE NO. 5

STRUCTURES DESIGN DETAIL SHEET (ENGLISH) (REV. 10/25/05)

ORIGINAL SCALE IN INCHES FOR REDUCED PLANS 0 1 2 3

CU 03
EA 3E0701

DISREGARD PRINTS BEARING EARLIER REVISION DATES

REVISION DATES: 03/24/10 03/18/10 03/22/10

SHEET 14 OF 14

FILE => 22-0124r-s-briprodt10.dgn

USERNAME => trphtis DATE PLOTTED => 24-JUN-2010 TIME PLOTTED => 13:44