ACSTP-P267(022)

Dist	COUNTY	ROUTE	POST MILES TOTAL PROJECT	SHEET No.	TOTAL SHEETS
03	Pla	267	0.0/6.8	1	65

STATE OF CALIFORNIA
DEPARTMENT OF TRANSPORTATION

PROJECT PLANS FOR CONSTRUCTION ON
STATE HIGHWAY

IN PLACER COUNTY
NEAR TRUCKEE FROM NEVADA COUNTY LINE
TO BROCKWAY SUMMIT

TO BE SUPPLEMENTED BY STANDARD PLANS DATED 2010

INDEX OF PLANS

SHEET No.	DESCRIPTION
1	TITLE AND LOCATION MAP
2-3	TYPICAL CROSS SECTIONS
4-16	CONSTRUCTION DETAILS
17	DRAINAGE PLAN
18	CONSTRUCTION AREA SIGNS
19-22	PAVEMENT DELINEATION DETAILS AND QUANTITIES
23-26	SUMMARY OF QUANTITIES
27-28	EROSION CONTROL PLANS
29-38	ELECTRICAL PLANS
39-65	REVISED STANDARD PLANS

THE STANDARD PLANS LIST APPLICABLE TO THIS CONTRACT IS INCLUDED IN THE NOTICE TO BIDDERS AND SPECIAL PROVISIONS BOOK.

LOCATION MAP

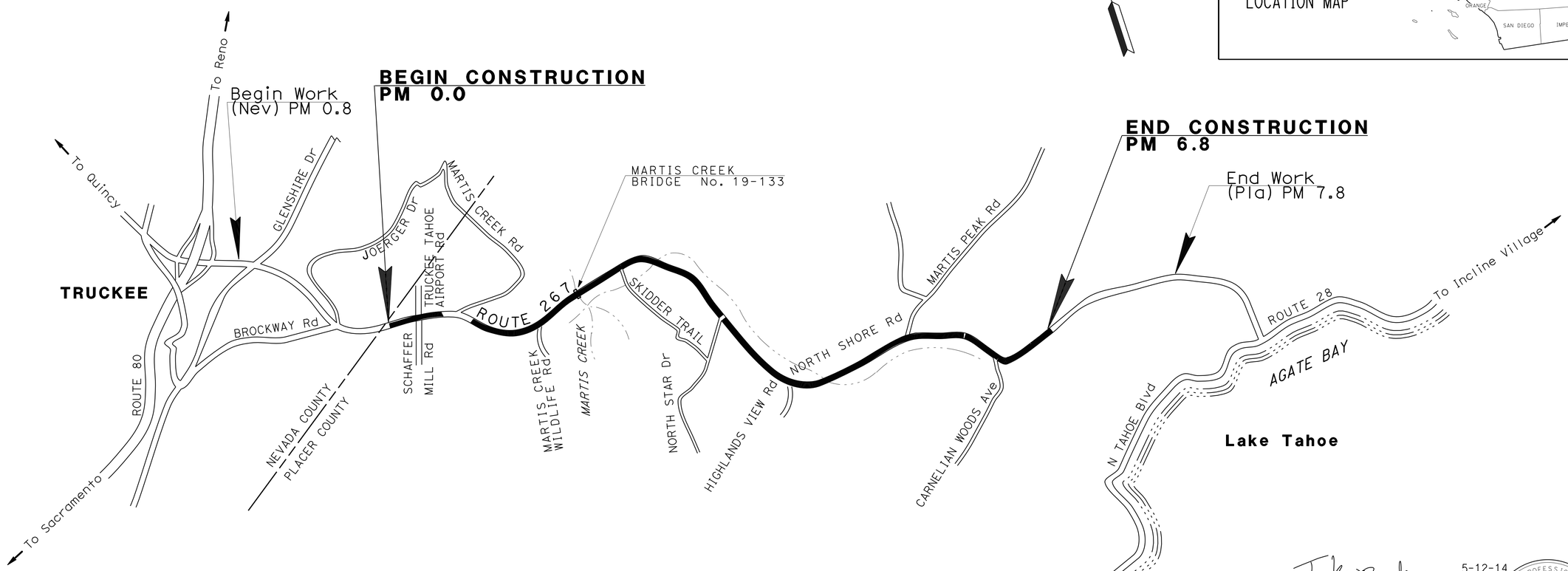

NO SCALE

THE CONTRACTOR SHALL POSSESS THE CLASS (OR CLASSES) OF LICENSE AS SPECIFIED IN THE "NOTICE TO BIDDERS."

T. Krishnakumary 5-12-14
PROJECT ENGINEER REGISTERED CIVIL ENGINEER DATE

REGISTERED PROFESSIONAL ENGINEER
KRISHNAKUMARY THAMILSERAN
No. C79630
Exp. 9/30/14
CIVIL
STATE OF CALIFORNIA

May 12, 2014
PLANS APPROVAL DATE

THE STATE OF CALIFORNIA OR ITS OFFICERS OR AGENTS SHALL NOT BE RESPONSIBLE FOR THE ACCURACY OR COMPLETENESS OF SCANNED COPIES OF THIS PLAN SHEET.

CONTRACT No.	03-2F2904
PROJECT ID	0300020602

PROJECT MANAGER: JESS AVILA
DESIGN ENGINEER: KEN KEATON

LAST REVISION 10-09-13
DATE PLOTTED => 01-JUL-2014
TIME PLOTTED => 10:59

Dist	COUNTY	ROUTE	POST MILES TOTAL PROJECT	SHEET No.	TOTAL SHEETS
03	Pla	267	0.0/6.8	2	65

REGISTERED CIVIL ENGINEER 5-12-14 DATE

5-12-14
PLANS APPROVAL DATE

REGISTERED PROFESSIONAL ENGINEER KRISHNAKUMARY THAMILSERAN No. C79630 Exp. 9/30/14 CIVIL STATE OF CALIFORNIA

THE STATE OF CALIFORNIA OR ITS OFFICERS OR AGENTS SHALL NOT BE RESPONSIBLE FOR THE ACCURACY OR COMPLETENESS OF SCANNED COPIES OF THIS PLAN SHEET.

NOTES:

1. DIMENSIONS OF THE PAVEMENT STRUCTURES (STRUCTURAL SECTIONS) ARE SUBJECT TO TOLERANCES SPECIFIED IN THE STANDARD SPECIFICATIONS.
2. SUPERELEVATION AS SHOWN OR AS DIRECTED BY THE ENGINEER.
3. FOR SAFETY EDGE DETAILS, SEE RSP P74 AND RSP P75 AND SUMMARY OF QUANTITIES FOR LOCATIONS.
4. FOR TYPE AND LOCATION OF HMA DIKE, GUARDRAIL, AND REPLACE AC SURFACING, SEE CONSTRUCTION DETAILS AND SUMMARY OF QUANTITIES FOR LOCATIONS.
5. FOR ACCURATE RIGHT OF WAY DATA, CONTACT RIGHT OF WAY ENGINEERING AT THE DISTRICT OFFICE.

1 Exist
0.90' AC
1.0' LIME TREATED BASE

2 Exist
0.40' HMA (TYPE A)
1.10' CL 2 AB

3 Exist
0.35' AC (TYPE A)
1.0' CI 2 AB

4 Exist
0.60' AC
0.50' AB
0.50' AS

5 0.1' HMA (TYPE A)
0.1' COLD PLANE AC PAVEMENT

6 0.25' HMA (TYPE A)
0.25' COLD PLANE AC PAVEMENT

7 0.20' HMA (TYPE A)
0.20' COLD PLANE AC PAVEMENT

8 0.6' HMA (TYPE A)
0.5' CL 2 AB

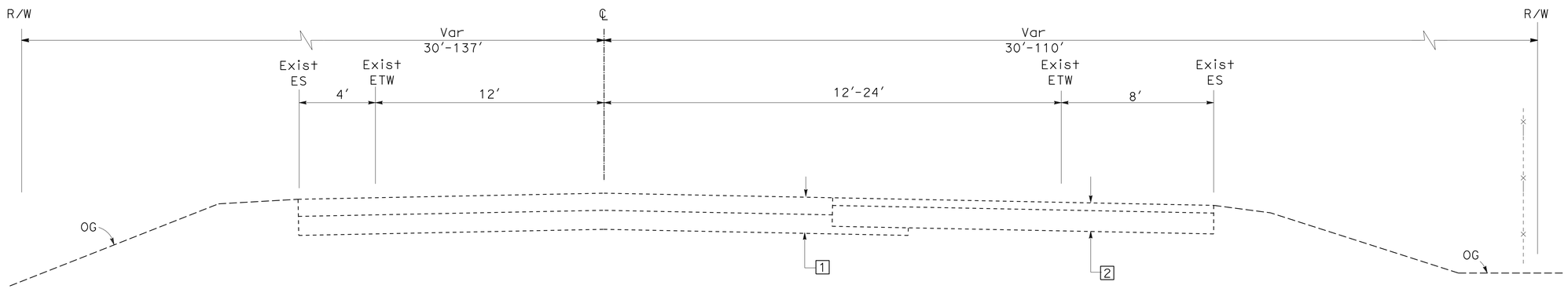

PM 0.7 TO PM 1.2
(NO WORK)

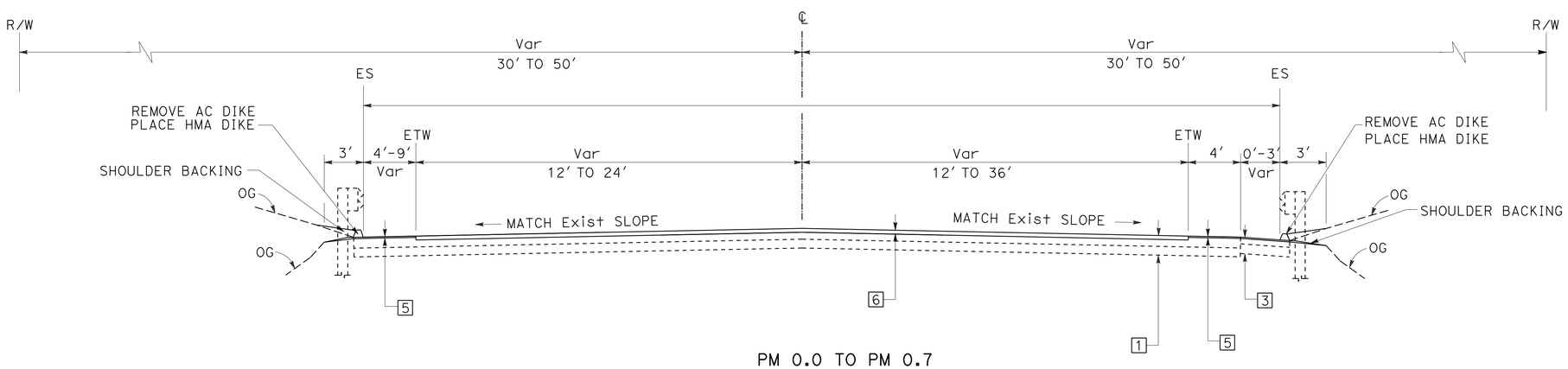

PM 0.0 TO PM 0.7

ROUTE 267

TYPICAL CROSS SECTIONS

NO SCALE

X-1

REVISED BY | DATE REVISED
DAC LE | KRISHNA SERAN
CALCULATED-DESIGNED BY | CHECKED BY
FUNCTIONAL SUPERVISOR | KEN KEATON
STATE OF CALIFORNIA - DEPARTMENT OF TRANSPORTATION
Caltrans
DESIGN

LAST REVISION 00-00-00 | DATE PLOTTED => 01-JUL-2014 | TIME PLOTTED => 10:59

Dist	COUNTY	ROUTE	POST MILES TOTAL PROJECT	SHEET No.	TOTAL SHEETS
03	Pla	267	0.0/6.8	3	65

REGISTERED CIVIL ENGINEER 5-12-14 DATE

5-12-14
PLANS APPROVAL DATE

REGISTERED PROFESSIONAL ENGINEER KRISHNAKUMARY THAMIL SERAN No. C79630 Exp. 9/30/14 CIVIL STATE OF CALIFORNIA

THE STATE OF CALIFORNIA OR ITS OFFICERS OR AGENTS SHALL NOT BE RESPONSIBLE FOR THE ACCURACY OR COMPLETENESS OF SCANNED COPIES OF THIS PLAN SHEET.

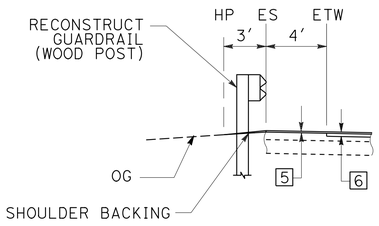

PM 6.25 TO PM 6.33 (NB)

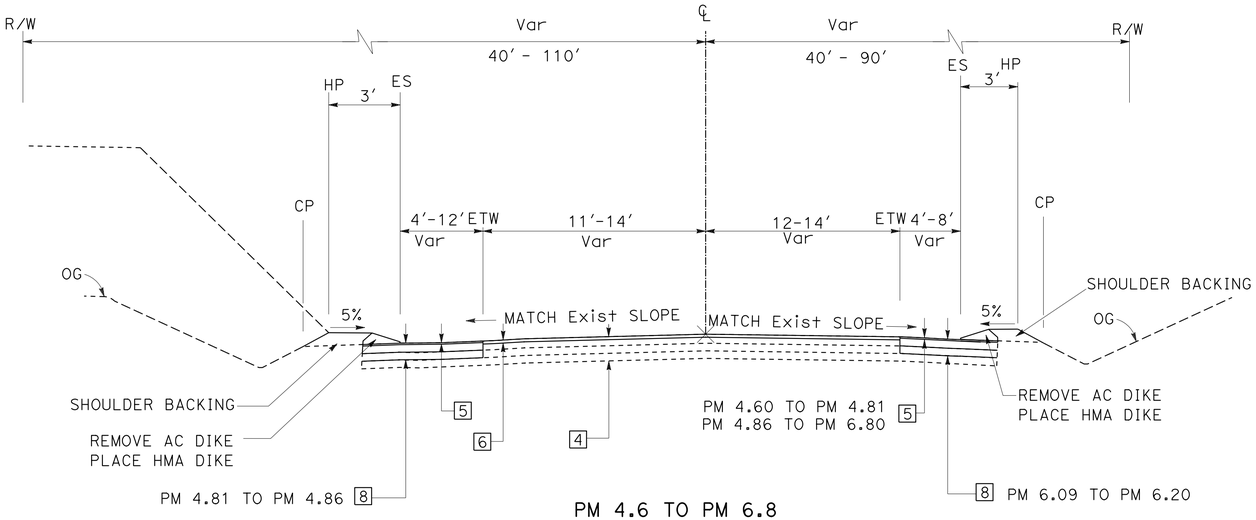

PM 4.6 TO PM 6.8

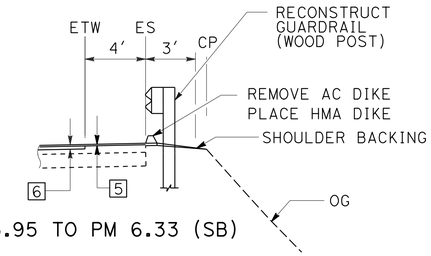

PM 5.95 TO PM 6.33 (SB)

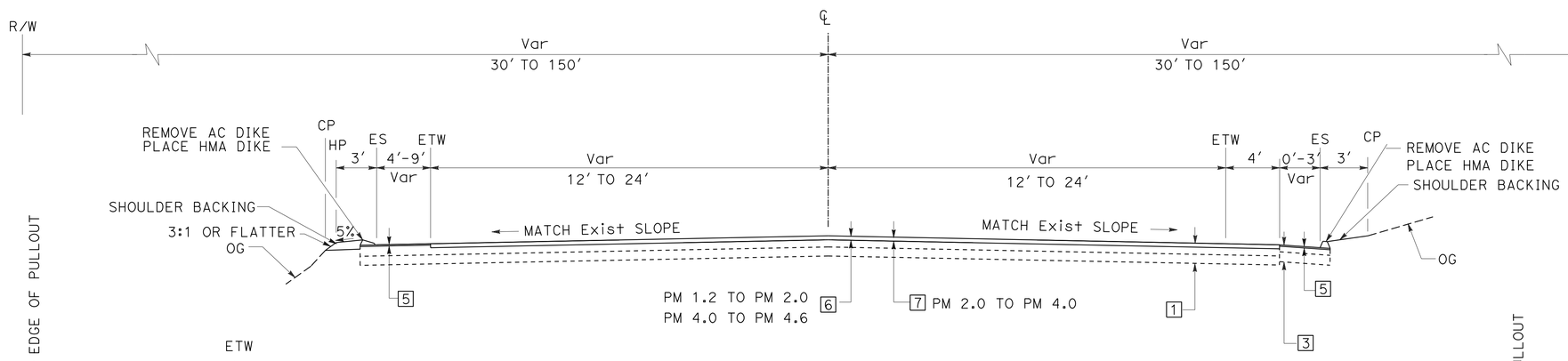

PM 1.2 TO PM 4.6

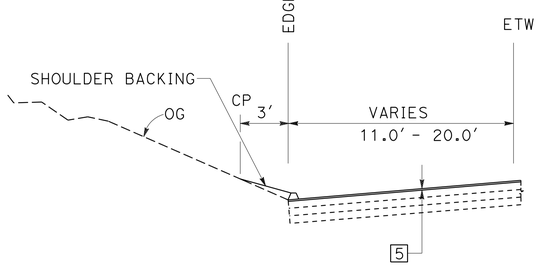

PULLOUT AT PM 4.61-4.62 (NB)

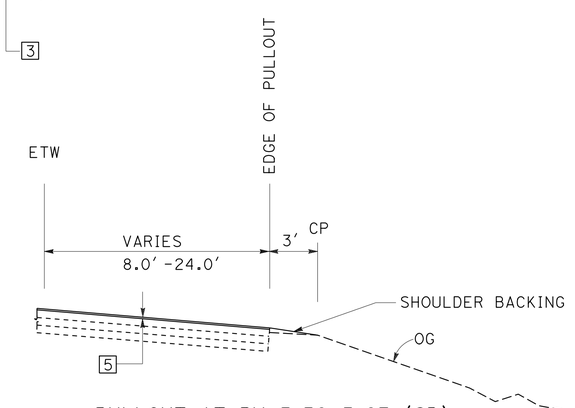

PULLOUT AT PM 5.58-5.63 (SB)

ROUTE 267

TYPICAL CROSS SECTIONS

NO SCALE

X-2

STATE OF CALIFORNIA - DEPARTMENT OF TRANSPORTATION
Caltrans® DESIGN

FUNCTIONAL SUPERVISOR: KEN KEATON

CALCULATED-DESIGNED BY: DAC LE
CHECKED BY: KRISHNA SERAN

REVISED BY | DATE REVISED

LAST REVISION 00-00-00 | DATE PLOTTED => 01-JUL-2014 | TIME PLOTTED => 10:59

Dist	COUNTY	ROUTE	POST MILES TOTAL PROJECT	SHEET No.	TOTAL SHEETS
03	Pla	267	0.0/6.8	4	65

REGISTERED CIVIL ENGINEER 5-12-14 DATE

5-12-14
PLANS APPROVAL DATE

REGISTERED PROFESSIONAL ENGINEER KRISHNAKUMARY THAMILSERAN No. C79630 Exp. 9/30/14 CIVIL STATE OF CALIFORNIA

THE STATE OF CALIFORNIA OR ITS OFFICERS OR AGENTS SHALL NOT BE RESPONSIBLE FOR THE ACCURACY OR COMPLETENESS OF SCANNED COPIES OF THIS PLAN SHEET.

NOTE:

1. FOR DIKE DIMENSIONS NOT SHOWN, SEE STANDARD PLAN A87B
2. EXACT LOCATIONS FOR REPLACE AC SURFACING ARE TO BE DETERMINED IN THE FIELD BY THE ENGINEER.

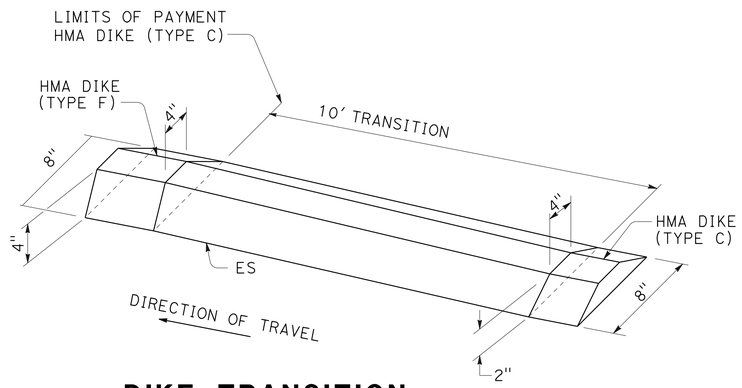

DIKE TRANSITION
TYPE C TO TYPE F

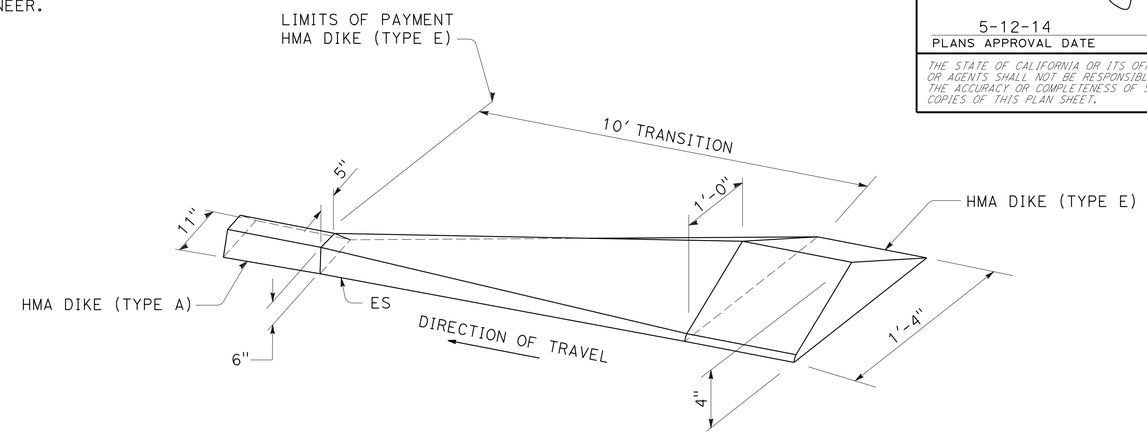

DIKE TRANSITION
TYPE E TO TYPE A

DRIVEWAY, LOCAL, AND COUNTY ROAD TRANSITIONS

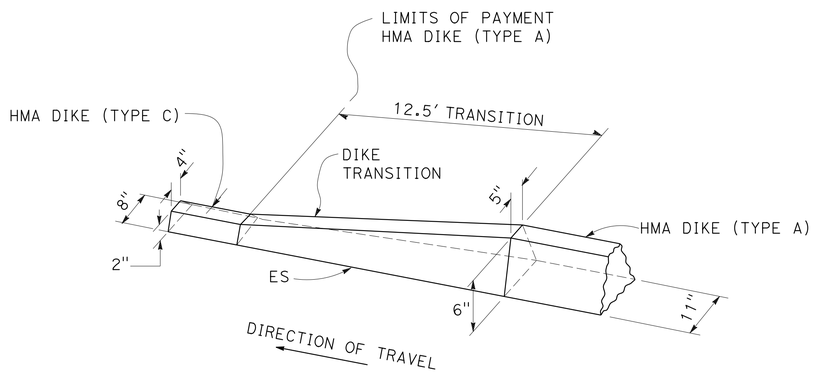

DIKE TRANSITION
TYPE A TO TYPE C

LOCATION			WIDTH (W1)	WIDTH (W2)	DISTANCE (L)	LOCATION DESCRIPTION
PM		DIR				
FROM	TO	NB/SB	LF	LF	LF	
0.02	0.07	SB	248	34	32	DRIVEWAY PM 0.03
0.02	0.07	NB	248	35	35	DRIVEWAY PM 0.03
0.24	0.27	NB	158	75	15	TRUCKEE TAHOE AIRPORT Rd PM 0.25
0.24	0.27	SB	158	71	30	SCHAFFER MILL Dr PM 0.25
1.05	1.07	NB	100	20	125	MARTIS CREEK Rd PM 1.06
1.47	1.49	SB	90	16	15	DRIVEWAY PM 1.48
2.39	2.41	SB	58	13	16	DRIVEWAY PM 2.40
2.53	2.57	SB	206	107	16	DRIVEWAY PM 2.54
3.75	3.77	SB	121	70	46	NORTHSTAR Dr PM 3.76
4.05	4.08	SB	159	47	15	HIGHLANDS VIEW Rd PM 4.06
4.31	4.34	NB	79	40	27	DRIVEWAY PM 4.33
4.61	4.62	NB	27	27	13	PULLOUT PM 4.61
5.58	5.63	SB	264	264	9	PULLOUT PM 5.61
6.20	6.25	NB	264	172	20	MARTIS PEAK Rd PM 6.23
6.70	6.72	SB	106	34	60	CARNELIAN WOODS Ave PM 6.71

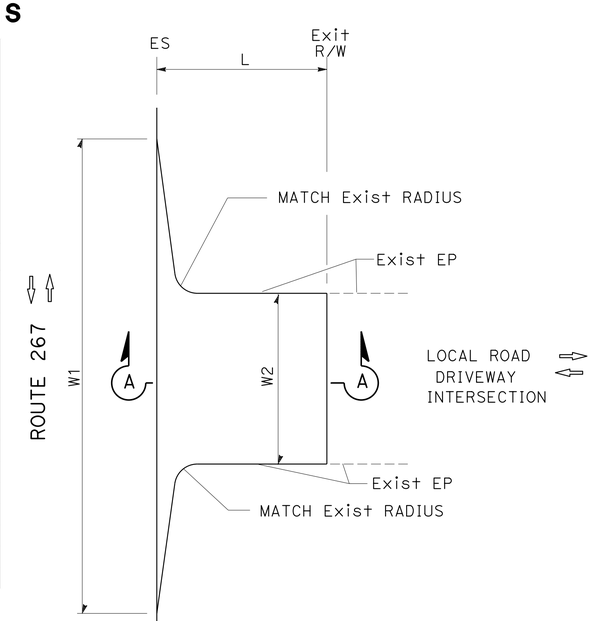

DRIVEWAY, LOCAL ROAD, AND
COUNTY ROAD PAVING LIMITS

(SEE TABLE 1)

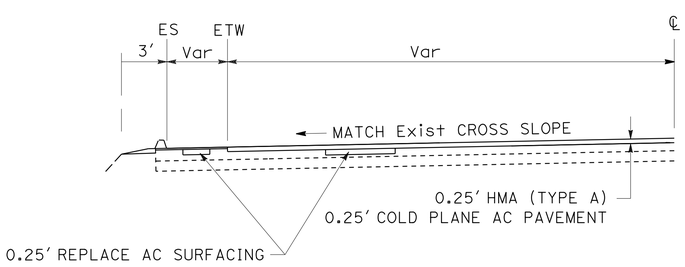

(REPLACE AC SURFACING IS NOT CONTINUOUS. SEE SUMMARY OF QUANTITIES FOR DETAIL)
** REPLACE AC SURFACING OCCURS AFTER COLD PLANE AC PAVEMENT **

REPLACE AC SURFACING

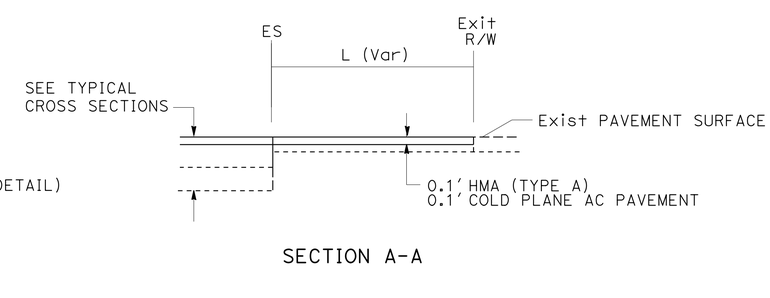

SECTION A-A

CONSTRUCTION DETAILS

NO SCALE

C-1

STATE OF CALIFORNIA - DEPARTMENT OF TRANSPORTATION
Caltrans®
DESIGN
FUNCTIONAL SUPERVISOR: KEN KEATON
CALCULATED-DESIGNED BY: DAC LE
CHECKED BY: KRISHNA SERAN
REVISED BY
DATE REVISED

LAST REVISION 00-00-00
DATE PLOTTED => 01-JUL-2014
TIME PLOTTED => 10:59

Dist	COUNTY	ROUTE	POST MILES TOTAL PROJECT	SHEET No.	TOTAL SHEETS
03	Pla	267	0.0/6.8	5	65

REGISTERED CIVIL ENGINEER 5-12-14 DATE

5-12-14
PLANS APPROVAL DATE

REGISTERED PROFESSIONAL ENGINEER KRISHNAKUMARY THAMIL SERAN No. C79630 Exp. 9/30/14 CIVIL STATE OF CALIFORNIA

THE STATE OF CALIFORNIA OR ITS OFFICERS OR AGENTS SHALL NOT BE RESPONSIBLE FOR THE ACCURACY OR COMPLETENESS OF SCANNED COPIES OF THIS PLAN SHEET.

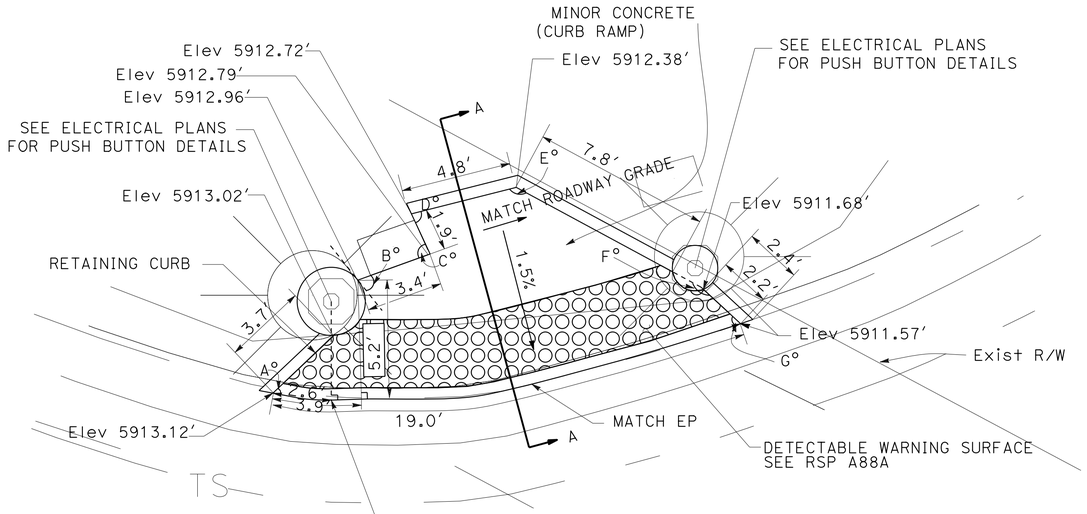

ANGLES

A° = 54°06′
B° = 71°18′
C° = 84°51′
D° = 79°11′
E° = 137°27′
F° = 165°38′
G° = 60°34′

CORNER 1

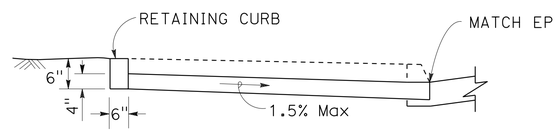

SECTION A-A

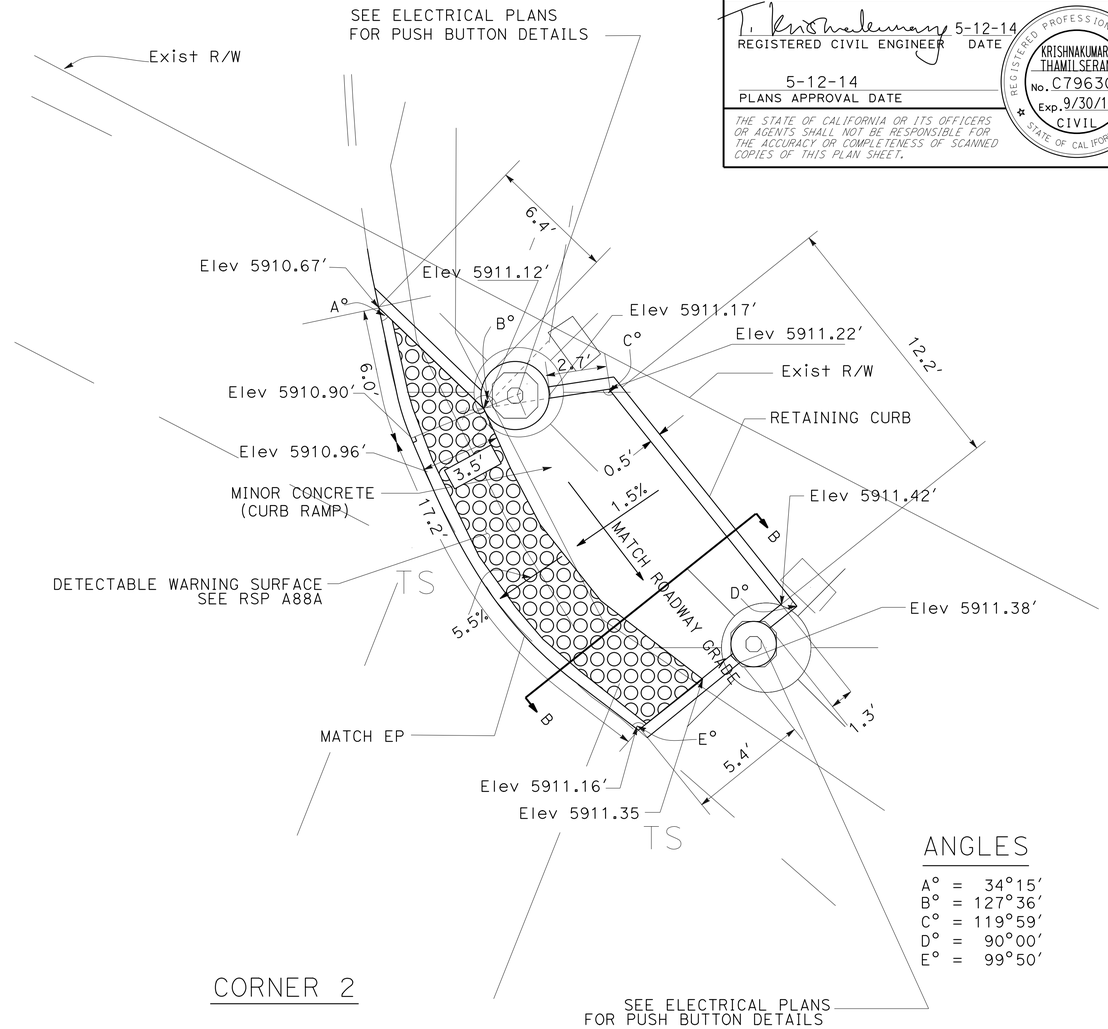

ANGLES

A° = 34°15′
B° = 127°36′
C° = 119°59′
D° = 90°00′
E° = 99°50′

CORNER 2

SEE ELECTRICAL PLANS FOR PUSH BUTTON DETAILS

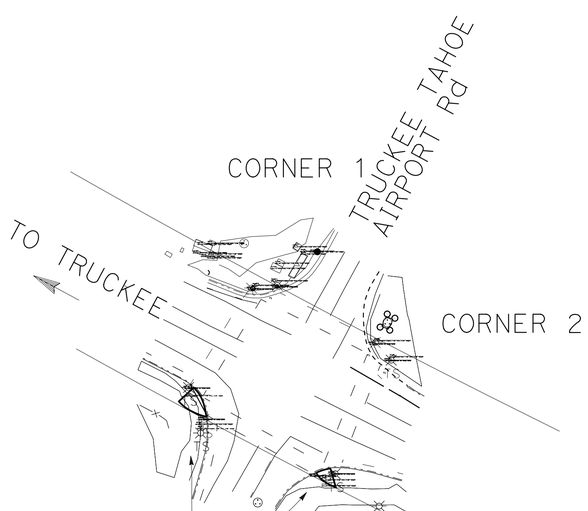

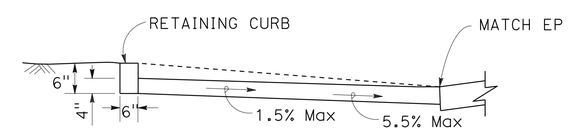

SECTION B-B

CURB RAMP DETAIL AT TRUCKEE TAHOE AIRPORT ROAD INTERSECTION (LOCATION 1 PM 0.25)

CONSTRUCTION DETAILS

NO SCALE

C-2

STATE OF CALIFORNIA - DEPARTMENT OF TRANSPORTATION
Caltrans® DESIGN

FUNCTIONAL SUPERVISOR: KEN KEATON
CALCULATED-DESIGNED BY: KRISHNA SERAN
CHECKED BY: DAC LE
REVISED BY / DATE REVISED

LAST REVISION 00-00-00 | DATE PLOTTED => 01-JUL-2014 | TIME PLOTTED => 10:59

Dist	COUNTY	ROUTE	POST MILES TOTAL PROJECT	SHEET No.	TOTAL SHEETS
03	Pla	267	0.0/6.8	6	65

T. Krishnakumary 5-12-14
REGISTERED CIVIL ENGINEER DATE

5-12-14
PLANS APPROVAL DATE

REGISTERED PROFESSIONAL ENGINEER
KRISHNAKUMARY THAMILSERAN
No. C79630
Exp. 9/30/14
CIVIL
STATE OF CALIFORNIA

THE STATE OF CALIFORNIA OR ITS OFFICERS OR AGENTS SHALL NOT BE RESPONSIBLE FOR THE ACCURACY OR COMPLETENESS OF SCANNED COPIES OF THIS PLAN SHEET.

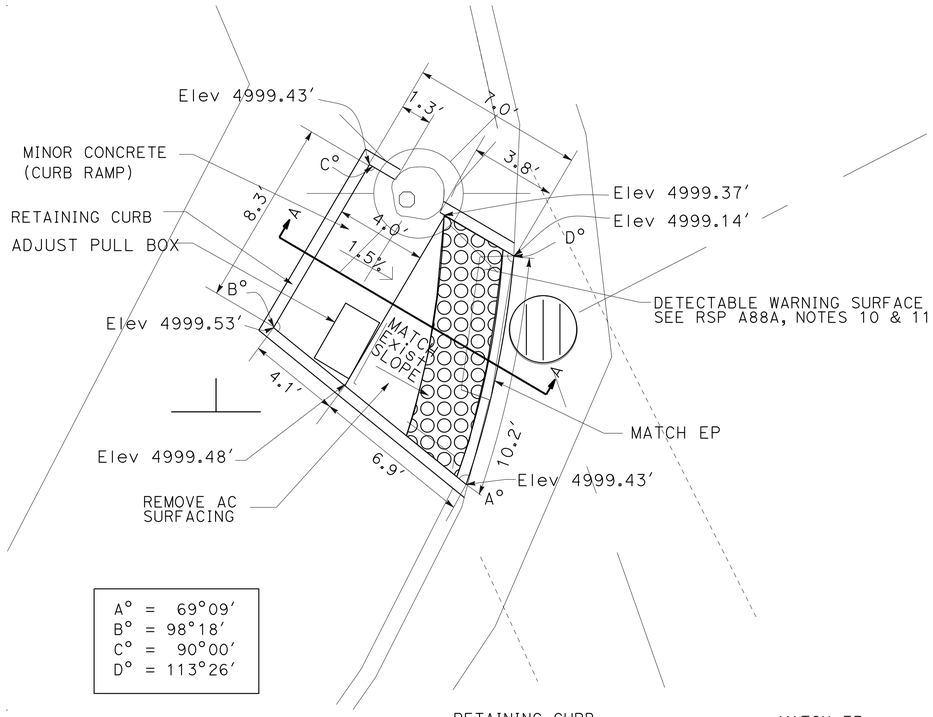

A° = 69°09′
B° = 98°18′
C° = 90°00′
D° = 113°26′

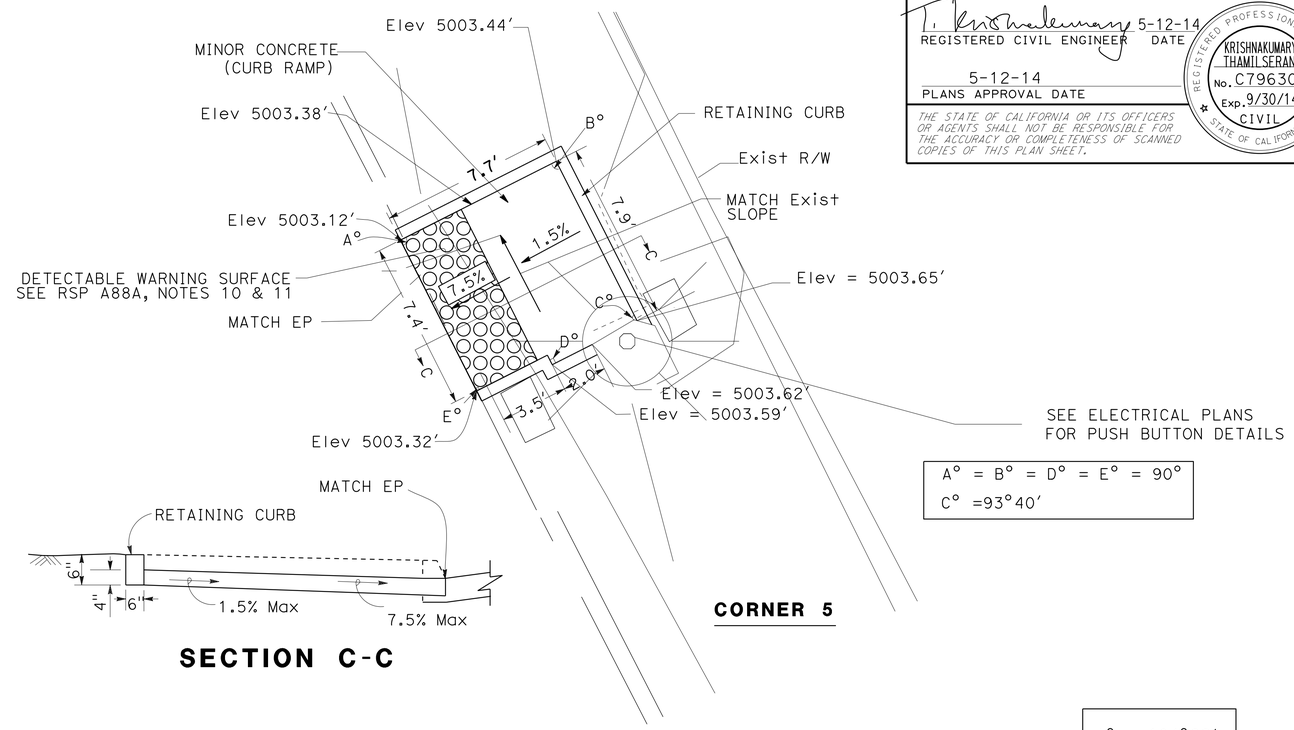

A° = B° = D° = E° = 90°
C° =93°40′

SECTION C-C

CORNER 5

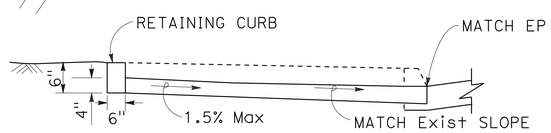

CORNER 3

SECTION A-A

A° = 104°22′
B° = 90°00′
C° = 90°00′
D° = 94°36′

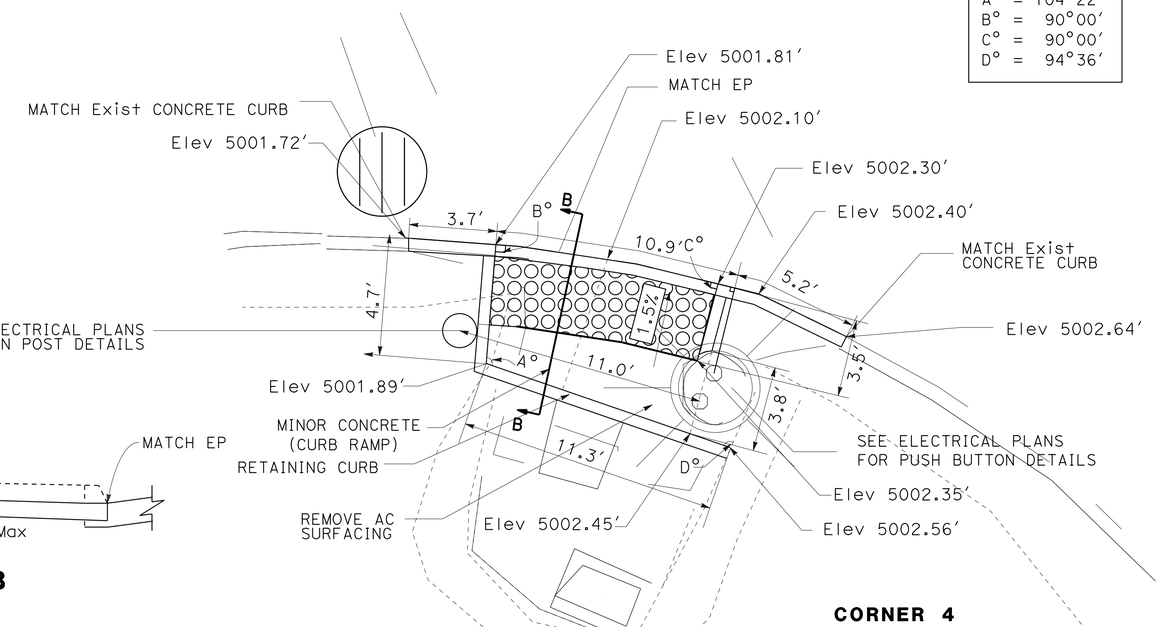

CORNER 4

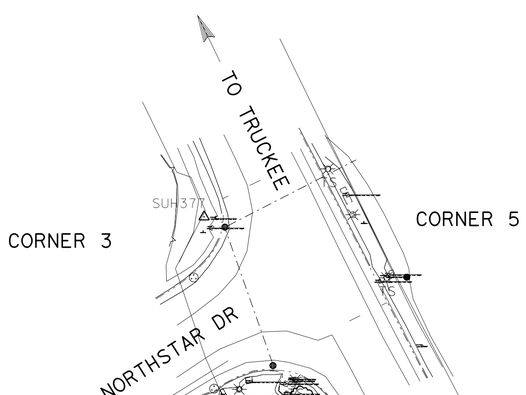

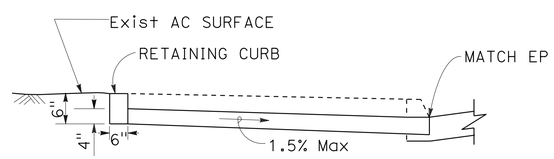

SECTION B-B

CURB RAMP DETAIL AT NORTHSTAR DRIVE INTERSECTION (LOCATION 2 PM 3.76)

CONSTRUCTION DETAILS

NO SCALE

C-3

STATE OF CALIFORNIA - DEPARTMENT OF TRANSPORTATION
Caltrans® DESIGN

FUNCTIONAL SUPERVISOR: KEN KEATON
CALCULATED-DESIGNED BY: KRISHNA SERAN
CHECKED BY: DAC LE
REVISED BY
DATE REVISED

LAST REVISION 00-00-00
DATE PLOTTED => 01-JUL-2014
TIME PLOTTED => 10:59

Dist	COUNTY	ROUTE	POST MILES TOTAL PROJECT	SHEET No.	TOTAL SHEETS
03	Pla	267	0.0/6.8	7	65

T. Krishnakumary 5-12-14
REGISTERED CIVIL ENGINEER DATE

5-12-14
PLANS APPROVAL DATE

REGISTERED PROFESSIONAL ENGINEER
KRISHNAKUMARY THAMILSERAN
No. C79630
Exp. 9/30/14
CIVIL
STATE OF CALIFORNIA

THE STATE OF CALIFORNIA OR ITS OFFICERS OR AGENTS SHALL NOT BE RESPONSIBLE FOR THE ACCURACY OR COMPLETENESS OF SCANNED COPIES OF THIS PLAN SHEET.

NOTES:

1. DRILL AND BOND #4 REBAR 4" MINIMUM INTO EXISTING INLET.
2. FOR DETAILS NOT SHOWN SEE RSP D73, D74B DRAINAGE INLETS.
3. SLURRY CEMENT MAY HAVE BEEN USED TO BACKFILL AROUND THE EXISTING DRAINAGE INLETS.
4. ACTUAL LOCATION OF SNOW POLE SLEEVE IS DETERMINED BY RESIDENT ENGINEER.

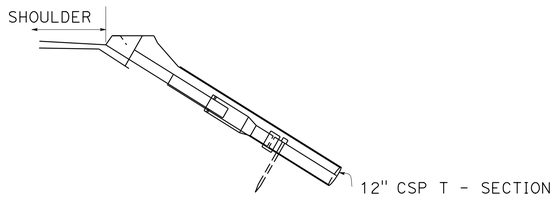

SECTION (TYPE 1)

(FOR DETAILS NOT SHOWN SEE STANDARD PLAN D87A)

PM 0.14 NB
PM 3.80 NB

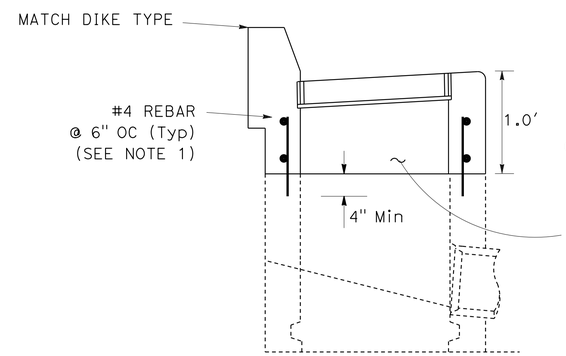

RECONSTRUCT DRAINAGE INLET
REPLACE INLET FRAME AND GRATE
PM 6.70 SB (NORTHWEST CORNER)

TYPE G3

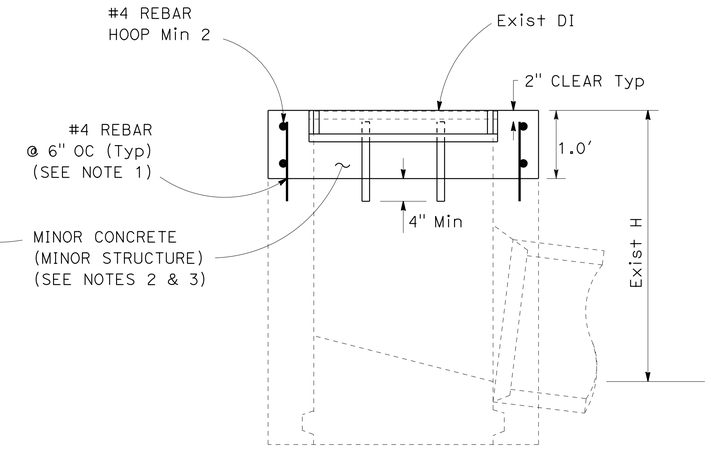

RECONSTRUCT DRAINAGE INLET
REPLACE INLET FRAME AND GRATE
PM 6.70 SB (SOUTHWEST)

TYPE G1

RECONSTRUCT DRAINAGE INLET

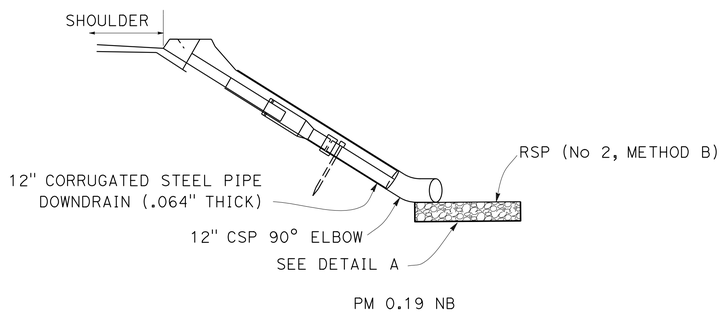

CORRUGATED STEEL PIPE DOWNDRAIN DETAIL

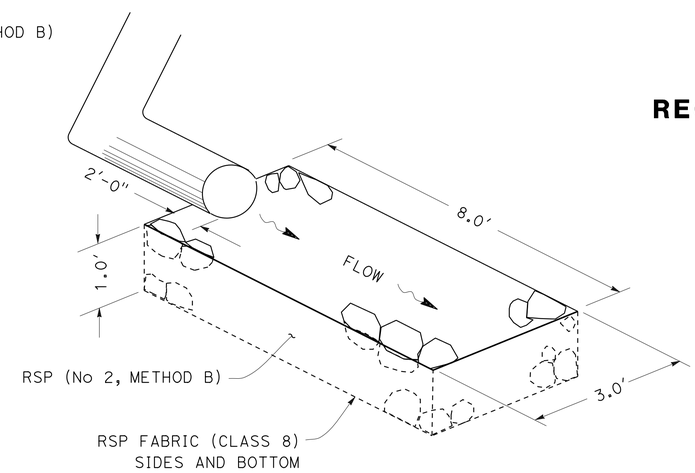

DETAIL A

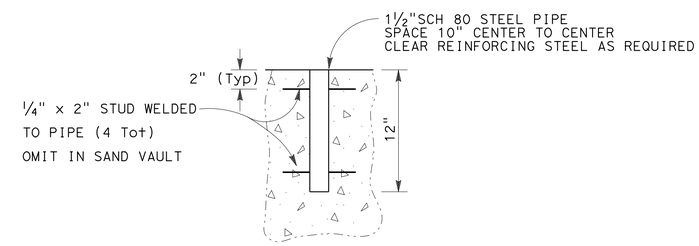

SNOW POLE SLEEVE

CONSTRUCTION DETAILS

NO SCALE

C-4

STATE OF CALIFORNIA - DEPARTMENT OF TRANSPORTATION
Caltrans
DESIGN
FUNCTIONAL SUPERVISOR: KEN KEATON
CALCULATED-DESIGNED BY: DAC LE
CHECKED BY: KRISHNA SERAN
REVISED BY
DATE REVISED

LAST REVISION 00-00-00
DATE PLOTTED => 01-JUL-2014
TIME PLOTTED => 10:59

Dist	COUNTY	ROUTE	POST MILES TOTAL PROJECT	SHEET No.	TOTAL SHEETS
03	Pla	267	0.0/6.8	8	65

REGISTERED CIVIL ENGINEER 5-12-14 DATE

5-12-14
PLANS APPROVAL DATE

REGISTERED PROFESSIONAL ENGINEER KRISHNAKUMARY THAMILSERAN No. C79630 Exp. 9/30/14 CIVIL STATE OF CALIFORNIA

THE STATE OF CALIFORNIA OR ITS OFFICERS OR AGENTS SHALL NOT BE RESPONSIBLE FOR THE ACCURACY OR COMPLETENESS OF SCANNED COPIES OF THIS PLAN SHEET.

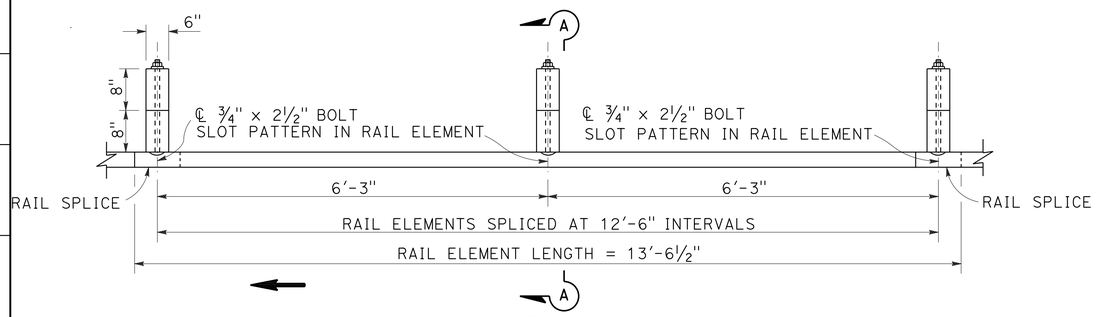

PLAN

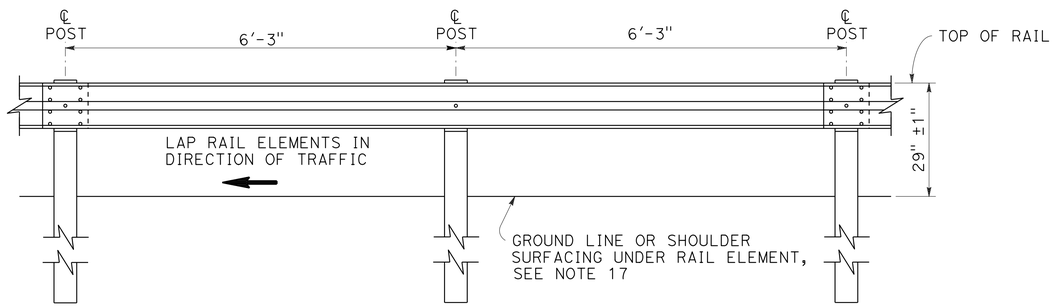

ELEVATION

METAL BEAM GUARD RAILING WITH WOOD POST AND BLOCKS

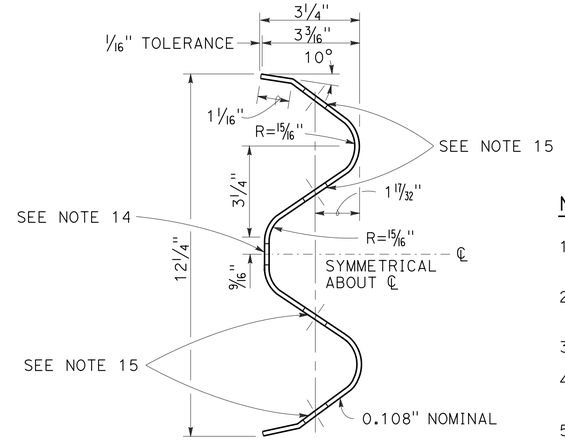

SECTION THRU
RAIL ELEMENT

NOTES:

1. FOR DETAILS OF STANDARD HARDWARE USED TO CONSTRUCT GUARD RAILING, SEE CONSTRUCTION DETAILS SHEET C-6.
2. FOR DETAILS OF WOOD POSTS AND WOOD BLOCKS USED TO CONSTRUCT GUARD RAILING, SEE CONSTRUCTION DETAILS SHEET C-7.
3. FOR ADDITIONAL INSTALLATION DETAILS, SEE CONSTRUCTION DETAILS SHEET C-8.
4. GUARD RAILING POST SPACING TO BE 6'-3" CENTER TO CENTER, EXCEPT AS OTHERWISE NOTED.
5. FOR GUARD RAILING TYPICAL LAYOUTS, SEE CONSTRUCTION DETAILS SHEETS C-11 AND C-12,
6. TO CONNECT RAILING TO TERMINAL SYSTEM END TREATMENT, TRANSITION THE TOP OF RAILING HEIGHT AT A RATIO OF 120:1 TO TERMINAL SYSTEM END TREATMENT HEIGHT PLUS ONE 12'-6" STANDARD RAILING SECTION AT THE TRANSITIONED HEIGHT FOR A HORIZONTAL CONNECTION TO THE END TREATMENT.
7. FOR GUARD RAILING END ANCHOR DETAILS, SEE CONSTRUCTION DETAILS SHEET C-13
8. DIRECTION OF ADJACENT TRAFFIC INDICATED BY ⟶.
9. FOR TYPICAL GUARD RAILING DELINEATION AND DIKE POSITIONING DETAILS, SEE CONSTRUCTION DETAILS SHEET C-9.
10. SLOTTED HOLE FOR BOLTED CONNECTION OF RAIL ELEMENT TO BLOCK AND POST. SEE "SECTION THRU RAIL ELEMENT".
11. SLOTTED HOLES FOR SPLICE BOLTS TO OVERLAP ENDS OF RAIL ELEMENT. SEE "SECTION THRU RAIL ELEMENT".
12. ADDITIONAL HOLE IN UPPERMOST PORTION OF LINE POST IS FOR POTENTIAL FUTURE ADJUSTMENTS OF RAILING HEIGHT. SEE STANDARD PLAN CONSTRUCTION DETAILS SHEET C-7.
13. INSTALL POSTS IN SOIL.

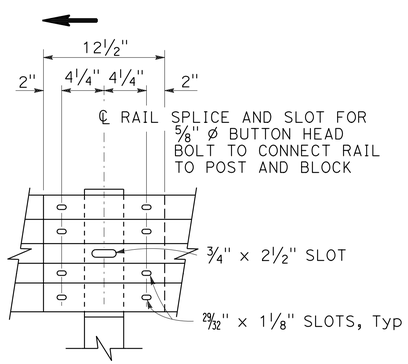

ELEVATION

RAIL ELEMENT SPLICE DETAIL

A) CONNECT THE OVER LAPPED END OF THE RAIL ELEMENTS WITH ⅝" ⁎ X 1 ⅜" BUTTON HEAD OVAL SHOULDER SPLICE BOLTS INSERTED INTO THE 13⁄16" X 1 ⅛" SLOTS AND BOLTED TOGETHER WITH ⅝" Ø RECESSED HEX NUTS. RECESS OF HEX NUT POINTS TOWARD RAIL ELEMENT. A TOTAL OF 8 BOLTS AND NUTS ARE TO BE USED AT EACH RAIL SPLICE CONNECTION.

b) THE ENDS OF THE RAIL ELEMENTS ARE TO BE OVERLAPPED IN THE DIRECTION OF TRAFFIC (SEE DETAILS).

c) WHERE END CAP IS TO BE ATTACHED TO THE END OF A RAIL ELEMENT, A TOTAL OF 4 OF THE ABOVE DESCRIBED SPLICE BOLTS AND NUTS ARE TO BE USED.

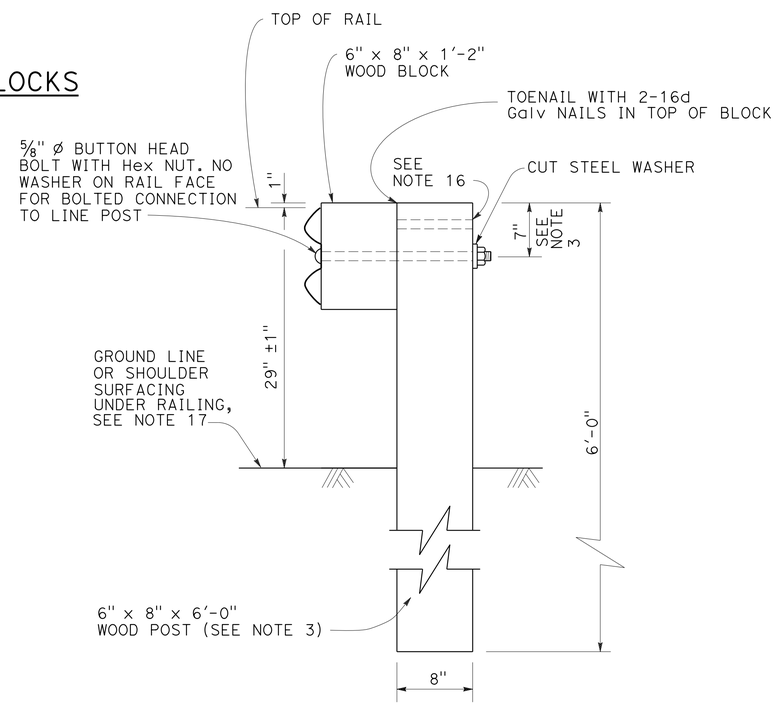

SECTION A-A
TYPICAL WOOD LINE
POST INSTALLATION
See Note 4

METAL BEAM GUARD RAILING STANDARD RAILING SECTION (WOOD POST WITH WOOD BLOCK) CONSTRUCTION DETAILS

NO SCALE

C-5

STATE OF CALIFORNIA - DEPARTMENT OF TRANSPORTATION
Caltrans DESIGN
FUNCTIONAL SUPERVISOR KEN KEATON
CALCULATED-DESIGNED BY DAC LE
CHECKED BY KRISHNA SERAN
REVISED BY
DATE REVISED

LAST REVISION 00-00-00
DATE PLOTTED => 01-JUL-2014
TIME PLOTTED => 10:59

Dist	COUNTY	ROUTE	POST MILES TOTAL PROJECT	SHEET No.	TOTAL SHEETS
03	Pla	267	0.0/6.8	9	65

T. Krishnakumary 5-12-14
REGISTERED CIVIL ENGINEER DATE

5-12-14
PLANS APPROVAL DATE

REGISTERED PROFESSIONAL ENGINEER
KRISHNAKUMARY THAMILSERAN
No. C79630
Exp. 9/30/14
CIVIL
STATE OF CALIFORNIA

THE STATE OF CALIFORNIA OR ITS OFFICERS OR AGENTS SHALL NOT BE RESPONSIBLE FOR THE ACCURACY OR COMPLETENESS OF SCANNED COPIES OF THIS PLAN SHEET.

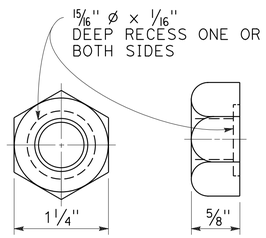

5/8" ø RECESS NUT

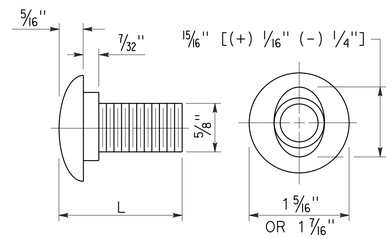

5/8" ø BUTTON HEAD BOLT

L	THREAD LENGTH
1 3/8"	FULL THREAD LENGTH
2"	FULL THREAD LENGTH
10"	4" Min THREAD LENGTH
18"	4" Min THREAD LENGTH
20"	4" Min THREAD LENGTH
22"	4" Min THREAD LENGTH
** 2 3/4"	2" Min THREAD LENGTH
** 19"	4" Min THREAD LENGTH

** For nested rail applications.

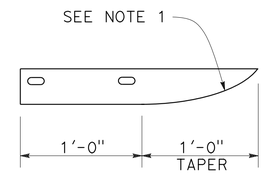

PLAN

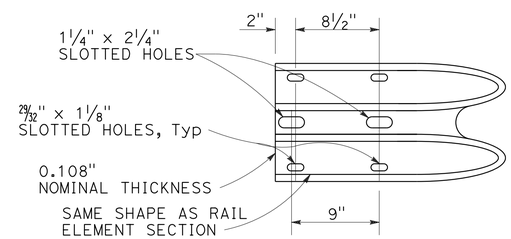

ELEVATION

END CAP

(TYPE A)

NOTE:

1. SLOTTED HOLES FOR SPLICE BOLTS TO OVERLAP ENDS OF RAIL ELEMENT.

METAL BEAM GUARD RAILING STANDARD HARDWARE

CONSTRUCTION DETAILS

NO SCALE

C-6

STATE OF CALIFORNIA - DEPARTMENT OF TRANSPORTATION
Caltrans® DESIGN
FUNCTIONAL SUPERVISOR: KEN KEATON
CALCULATED-DESIGNED BY: DAC LE
CHECKED BY: KRISHNA SERAN
REVISED BY
DATE REVISED

LAST REVISION 00-00-00
DATE PLOTTED => 01-JUL-2014
TIME PLOTTED => 10:59

Dist	COUNTY	ROUTE	POST MILES TOTAL PROJECT	SHEET No.	TOTAL SHEETS
03	Pla	267	0.0/6.8	10	65

T. Krishnakumary 5-12-14
REGISTERED CIVIL ENGINEER DATE

5-12-14
PLANS APPROVAL DATE

REGISTERED PROFESSIONAL ENGINEER
KRISHNAKUMARY THAMILSERAN
No. C79630
Exp. 9/30/14
CIVIL
STATE OF CALIFORNIA

THE STATE OF CALIFORNIA OR ITS OFFICERS OR AGENTS SHALL NOT BE RESPONSIBLE FOR THE ACCURACY OR COMPLETENESS OF SCANNED COPIES OF THIS PLAN SHEET.

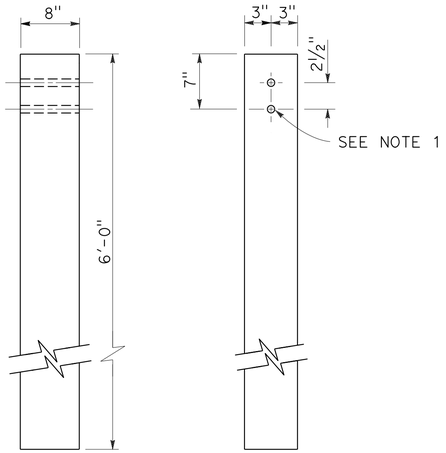

SIDE FRONT

6" x 8" WOOD POST

See Note 3

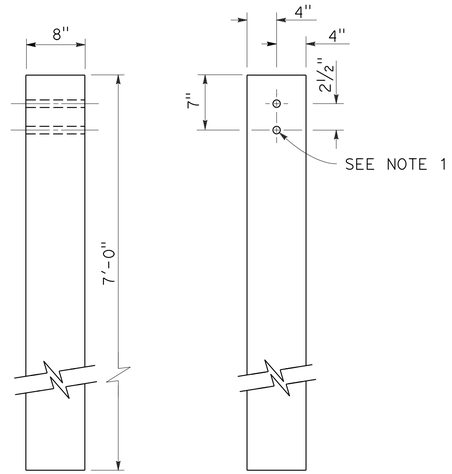

SIDE FRONT

8" x 8" WOOD POST

See Note 4

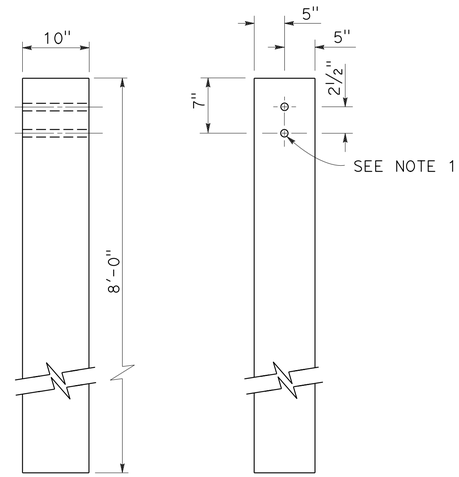

SIDE FRONT

10" x 10" WOOD POST

See Note 5

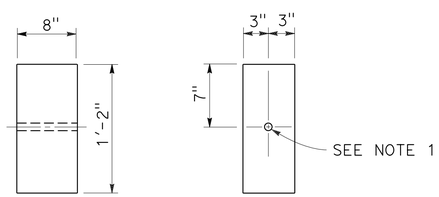

SIDE FRONT

6" x 8" WOOD BLOCK

See Note 3

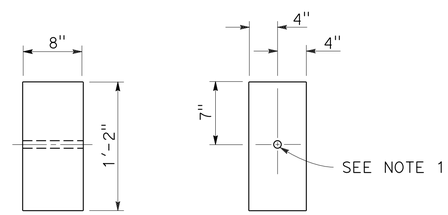

SIDE FRONT

8" x 8" WOOD BLOCK

NOTES:

1. ALL HOLES IN WOOD POSTS AND BLOCKS SHALL BE ¾" DIA ± 1/16".
2. DIMENSIONS SHOWN FOR WOOD POST ARE NOMINAL.
3. THIS POST AND BLOCK COMBINATION USED FOR STANDARD LINE POST SECTIONS OF GUARD RAILING.
4. THIS POST AND 8" X 8" BLOCK COMBINATION USED FOR LINE POST SECTIONS OF GUARD RAILING ON NARROW ROADWAYS.
5. THIS POST AND 8" X 8" BLOCK COMBINATION IS TYPICALLY USED WHERE STRENGTHENED LINE POST SECTIONS OF GUARD RAILINGS ARE WARRANTED TO SHIELD FIXED OBJECTS.

METAL BEAM GUARD RAILING WOOD POST AND WOOD BLOCK DETAILS

CONSTRUCTION DETAILS

NO SCALE

C-7

REVISED BY | DATE REVISED
DAC LE | KRISHNA SERAN
CALCULATED-DESIGNED BY | CHECKED BY
FUNCTIONAL SUPERVISOR | KEN KEATON
STATE OF CALIFORNIA - DEPARTMENT OF TRANSPORTATION
Caltrans® DESIGN

LAST REVISION 00-00-00 | DATE PLOTTED => 01-JUL-2014 | TIME PLOTTED => 10:59

Dist	COUNTY	ROUTE	POST MILES TOTAL PROJECT	SHEET No.	TOTAL SHEETS
03	Pla	267	0.0/6.8	11	65

T. Krishnakumary 5-12-14
REGISTERED CIVIL ENGINEER DATE

5-12-14
PLANS APPROVAL DATE

REGISTERED PROFESSIONAL ENGINEER
KRISHNAKUMARY THAMIL SERAN
No. C79630
Exp. 9/30/14
CIVIL
STATE OF CALIFORNIA

THE STATE OF CALIFORNIA OR ITS OFFICERS OR AGENTS SHALL NOT BE RESPONSIBLE FOR THE ACCURACY OR COMPLETENESS OF SCANNED COPIES OF THIS PLAN SHEET.

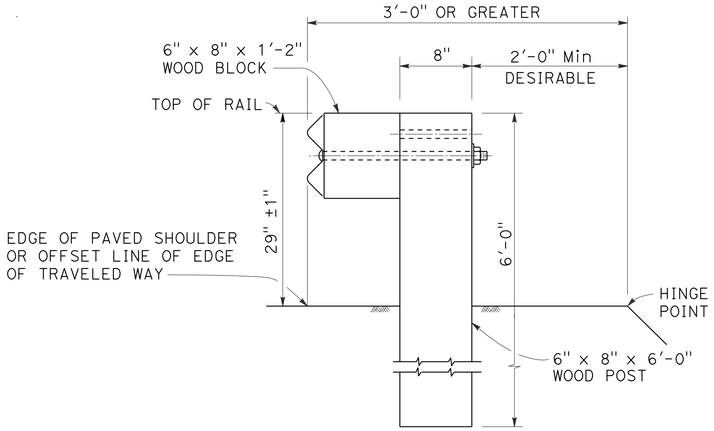

DETAIL A

TYPICAL ROADWAY INSTALLATION

SEE NOTE 1

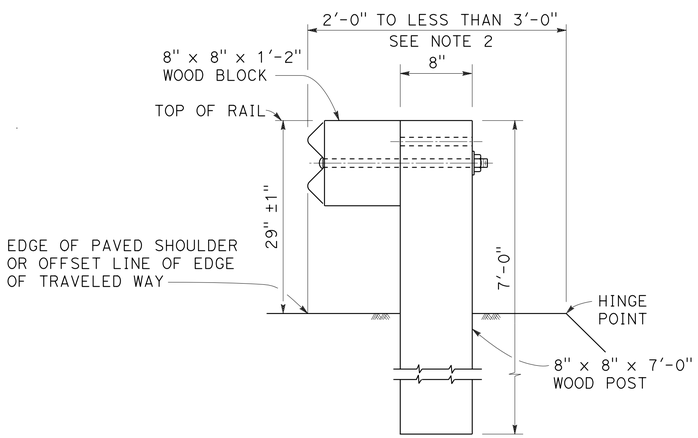

DETAIL B

NARROW ROADWAY INSTALLATION

SEE NOTE 1

POST EMBEDMENT

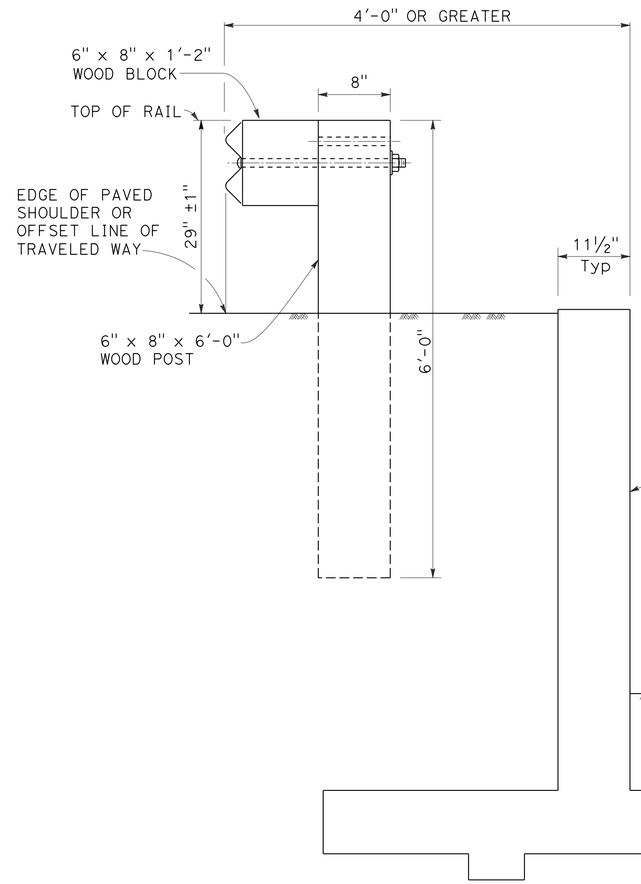

DETAIL C

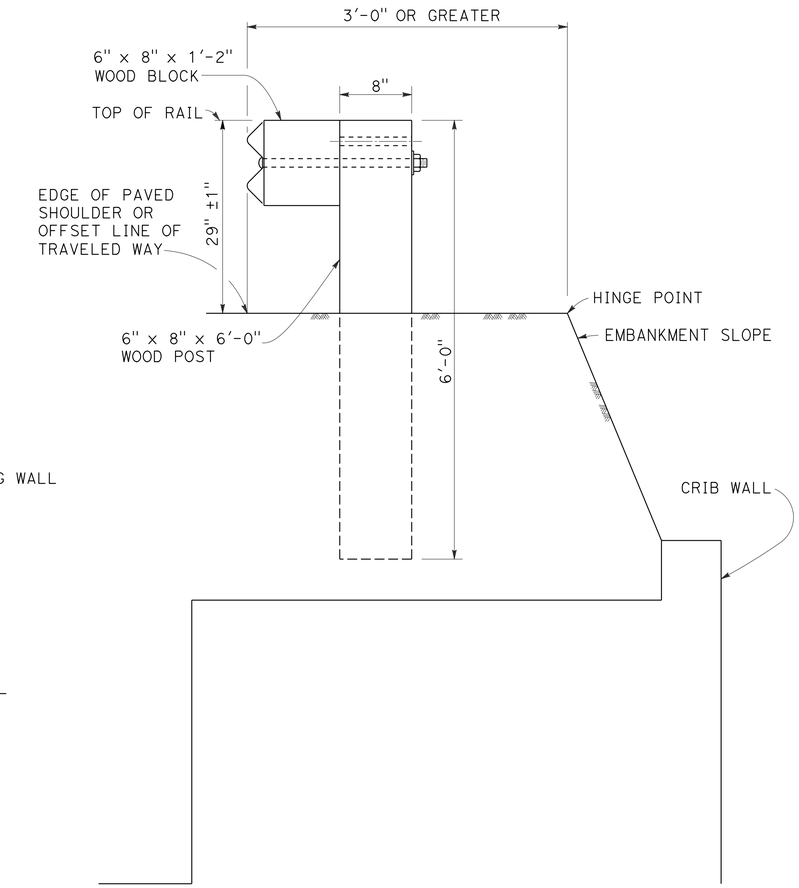

DETAIL D

INSTALLATION AT EARTH RETAINING WALLS

NOTES:

1. THESE INSTALLATION DETAILS ALSO APPLICABLE TO STEEL LINE POST INSTALLATIONS. FOR DETAIL A, C, AND D, WHERE STEEL LINE POST INSTALLATIONS ARE CONSTRUCTED, W6 X 9 STEEL POST, 6'-0" IN LENGTH, WITH 6" X 8" X 1'-2" NOTCHED WOOD BLOCKS OR NOTCHED RECYCLED PLASTIC BLOCKS ARE TO BE USED IN PLACE OF THE SIZE OF WOOD POST AND WOOD BLOCK SHOWN. FOR DETAIL B, WHERE STEEL LINE POST INSTALLATIONS ARE CONSTRUCTED, W6 X 9 STEEL POST, 7'-0" IN LENGTH, WITH 6" X 8" X 1'-2" NOTCHED WOOD BLOCKS OR NOTCHED RECYCLED PLASTIC BLOCKS ARE TO BE USED IN PLACE OF THE SIZE OF WOOD POST AND WOOD BLOCK SHOWN. FOR ADDITIONAL INSTALLATION DETAILS, SEE CONSTRUCTION DETAILS SHEET C-5.
2. WHERE THE DISTANCE BETWEEN THE FACE OF THE RAIL AND THE HINGE POINT IS LESS THAN 2'-0", SEE THE PROJECT PLANS FOR SPECIAL DETAILS.
3. FOR DIKE POSITIONING WITH GUARD RAILING INSTALLATIONS, SEE CONSTRUCTION DETAILS SHEET C-9.

METAL BEAM GUARD RAILING TYPICAL LINE POST EMBEDMENT AND HINGE POINT OFFSET DETAILS

CONSTRUCTION DETAILS

NO SCALE

C-8

REVISED BY | DATE REVISED
DAC LE | KRISHNA SERAN
CALCULATED-DESIGNED BY | CHECKED BY
FUNCTIONAL SUPERVISOR | KEN KEATON
STATE OF CALIFORNIA - DEPARTMENT OF TRANSPORTATION
Caltrans® DESIGN

LAST REVISION 00-00-00 | DATE PLOTTED => 01-JUL-2014 | TIME PLOTTED => 10:59

Dist	COUNTY	ROUTE	POST MILES TOTAL PROJECT	SHEET No.	TOTAL SHEETS
03	Pla	267	0.0/6.8	12	65

T. Krishnakumary 5-12-14
REGISTERED CIVIL ENGINEER DATE

5-12-14
PLANS APPROVAL DATE

REGISTERED PROFESSIONAL ENGINEER
KRISHNAKUMARY THAMILSERAN
No. C79630
Exp. 9/30/14
CIVIL
STATE OF CALIFORNIA

THE STATE OF CALIFORNIA OR ITS OFFICERS OR AGENTS SHALL NOT BE RESPONSIBLE FOR THE ACCURACY OR COMPLETENESS OF SCANNED COPIES OF THIS PLAN SHEET.

NOTES:

1. WHEN NECESSARY TO PLACE DIKE IN FRONT OF FACE OF GUARD RAILING, ONLY TYPE C DIKE MAY BE USED. FOR DIKE DETAILS, SEE REVISED STANDARD PLAN RSP A87B.
2. FOR STANDARD RAILING POST EMBEDMENT, SEE CONSTRUCTION DETAILS SHEET C-8.
3. GUARD RAILING DELINEATION TO BE USED WHERE SHOWN ON THE PROJECT PLANS.
4. WHEN DIKE OR CURB IS PLACED UNDER GUARD RAILING, THE MAXIMUM HEIGHT OF THE DIKE OR CURB SHALL BE 4". MOUNTABLE DIKE SHOULD NOT BE USED. FOR DIKE AND CURB DETAILS, SEE REVISED STANDARD PLANS RSP A87A AND RSP A87B.
5. FOR DETAILS OF TYPICAL DISTANCE BETWEEN THE FACE OF RAIL AND HINGE POINT, SEE CONSTRUCTION DETAILS SHEET C-8.
6. FOR STEEL LINE POSTS, USE 1/4 - 20 SELF-TAPPING SCREWS IN 0.22" DIAMETER HOLES OR 1/4" BOLTS IN 9/32" DIAMETER HOLES.

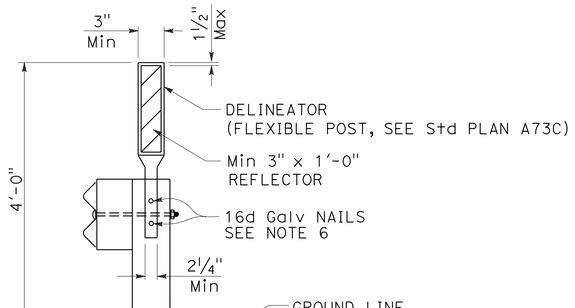

GUARD RAILING DELINEATION
See Note 3

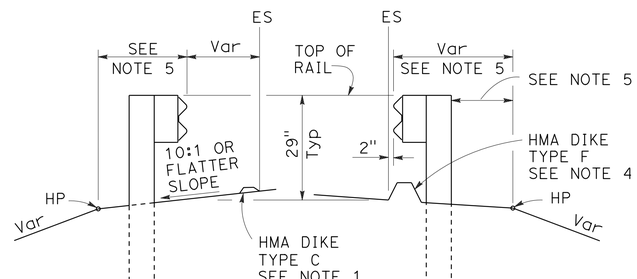

DIKE POSITIONING
See Note 1

METAL BEAM GUARD RAILING TYPICAL RAILING DELINEATION AND DIKE POSITIONING DETAILS

CONSTRUCTION DETAILS

NO SCALE

C-9

STATE OF CALIFORNIA - DEPARTMENT OF TRANSPORTATION
Caltrans DESIGN

FUNCTIONAL SUPERVISOR: KEN KEATON
CALCULATED-DESIGNED BY: DAC LE
CHECKED BY: KRISHNA SERAN
REVISED BY
DATE REVISED

LAST REVISION 00-00-00
DATE PLOTTED => 01-JUL-2014
TIME PLOTTED => 10:59

Dist	COUNTY	ROUTE	POST MILES TOTAL PROJECT	SHEET No.	TOTAL SHEETS
03	Pla	267	0.0/6.8	13	65

T. Krishnakumary 5-12-14
REGISTERED CIVIL ENGINEER DATE

5-12-14
PLANS APPROVAL DATE

REGISTERED PROFESSIONAL ENGINEER KRISHNAKUMARY THAMIL SERAN No. C79630 Exp. 9/30/14 CIVIL STATE OF CALIFORNIA

THE STATE OF CALIFORNIA OR ITS OFFICERS OR AGENTS SHALL NOT BE RESPONSIBLE FOR THE ACCURACY OR COMPLETENESS OF SCANNED COPIES OF THIS PLAN SHEET.

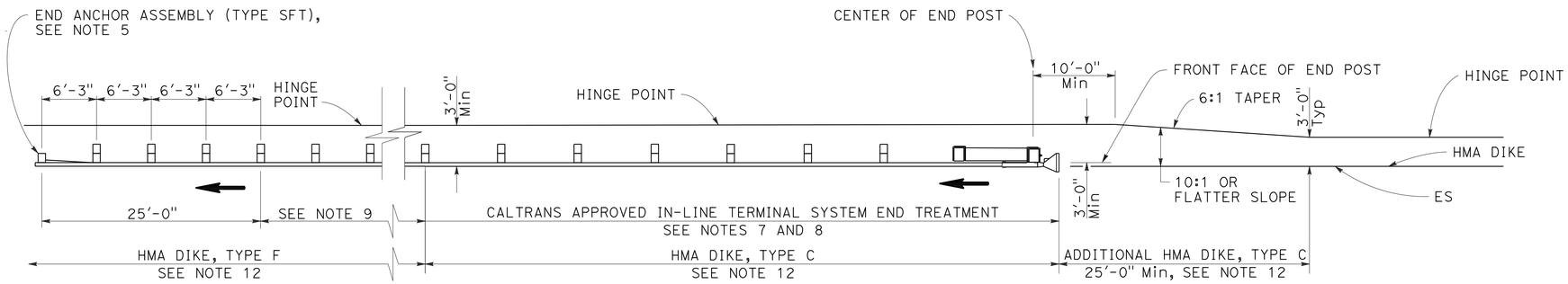

TYPE 11A LAYOUT

(EMBANKMENT GUARD RAILING INSTALLATION WITH IN-LINE END TREATMENT AT TRAFFIC APPROACH END OF RAILING)
SEE NOTE 6

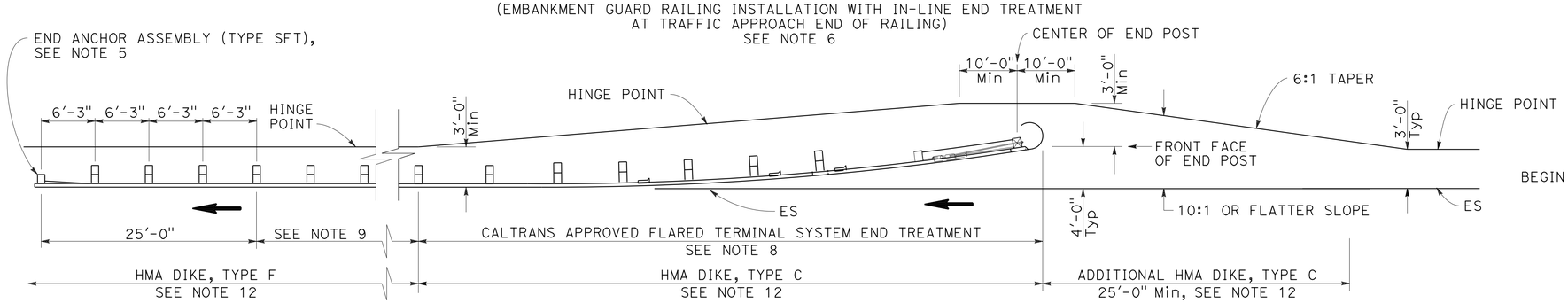

TYPE 11B LAYOUT

(EMBANKMENT GUARD RAILING INSTALLATION WITH FLARED END TREATMENT AT TRAFFIC APPROACH END OF RAILING)
SEE NOTE 6

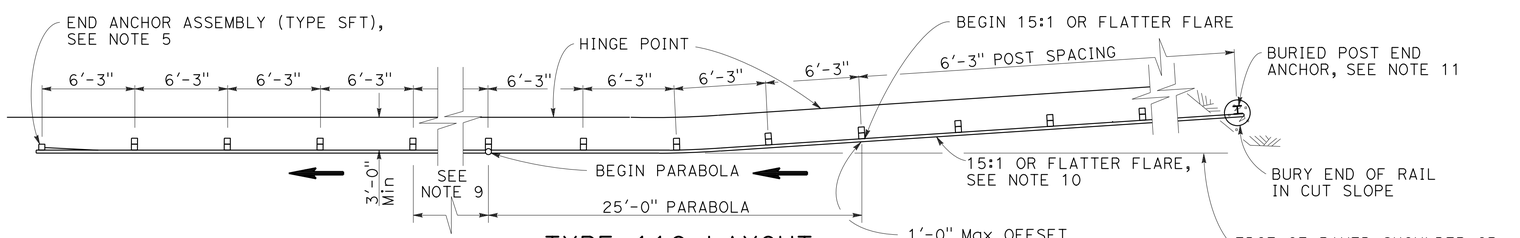

TYPE 11C LAYOUT

(EMBANKMENT GUARD RAILING INSTALLATION WITH BURIED END ANCHOR TREATMENT AT TRAFFIC APPROACH END OF RAILING)
SEE NOTES 6 AND 12

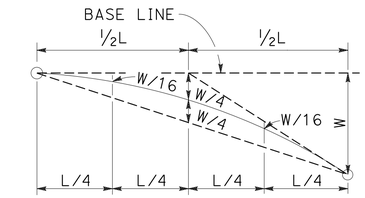

TYPICAL PARABOLIC LAYOUT

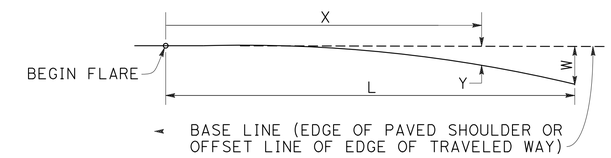

$$Y = \frac{WX^2}{L^2}$$

Y = OFFSET FROM BASE LINE
W = MAXIMUM OFFSET
X = DISTANCE ALONG BASE LINE
L = LENGTH OF FLARE

PARABOLIC FLARE OFFSETS

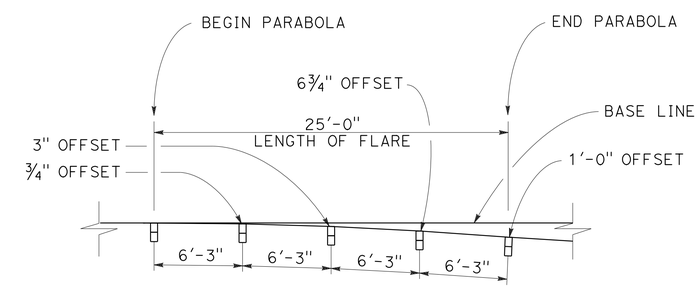

TYPICAL FLARE OFFSETS FOR 1 FOOT Max END OFFSET

NOTES:

1. LINE POST, BLOCKS AND HARDWARE TO BE USED ARE SHOWN ON STANDARD PLANS C-5, C-6 AND C-7.
2. GUARD RAIL POST SPACING TO BE 6'-3" CENTER TO CENTER, EXCEPT AS OTHERWISE NOTED.
3. EXCEPT AS NOTED, LINE POSTS ARE 6" X 8" X 6'-0" WOOD WITH 6" X 8" X 1'-2" WOOD BLOCKS. W6 X 9 STEEL POSTS, 6'-0" IN LENGTH, WITH 6" X 8" X 1'-2" NOTCHED WOOD BLOCKS OR RECYCLED PLASTIC BLOCKS MAY BE USED FOR 6" X 8" X 6'-0" WOOD POST WITH 6" X 8" X 1'-2" WOOD BLOCKS WHERE APPLICABLE AND WHEN SPECIFIED.
4. DIRECTION OF ADJACENT TRAFFIC INDICATED BY →.
5. LAYOUT TYPES 11A, 11B OR 11C ARE TYPICALLY USED WHERE GUARD RAILING IS RECOMMENDED TO SHIELD EMBANKMENT SLOPES AND A CRASHWORTHY END TREATMENT IS REQUIRED FOR ONLY ONE DIRECTION OF TRAFFIC.
6. IN-LINE TERMINAL SYSTEM END TREATMENTS ARE USED WHERE SITE CONDITIONS WILL NOT ACCOMMODATE A FLARED END TREATMENT.
7. THE TYPE OF TERMINAL SYSTEM END TREATMENT TO BE USED WILL BE SHOWN ON THE PROJECT PLANS.
8. DEPENDENT ON SITE CONDITIONS (EMBANKMENT HEIGHT AND SIDE SLOPE), CONSTRUCTION OF ADDITIONAL GUARD RAILING (LENGTH EQUAL TO MULTIPLES OF 12'-6" WITH 6'-3" POST SPACING) MAY BE ADVISABLE.
9. THE 15:1 OR FLATTER FLARE USED WITH BURIED END ANCHORS IS BASED ON THE EDGE OF THE PAVED SHOULDER OR OFFSET LINE OF EDGE OF THE TRAVELED WAY. THE LENGTH OF GUARD RAILING WITHIN THE 15:1 OR FLATTER FLARE IS BASED ON SITE CONDITIONS AND SHOULD BE A LENGTH EQUAL TO MULTIPLES OF 12'-6".
10. FOR DETAILS OF THE BURIED POST END ANCHOR USED WITH TYPE 11C LAYOUT, SEE STANDARD PLAN A77I2.
11. WHERE PLACEMENT OF DIKE IS REQUIRED WITH GUARD RAILING INSTALLATIONS, SEE STANDARD PLAN A77C4 FOR DIKE POSITIONING DETAILS.

METAL BEAM GUARD RAILING TYPICAL LAYOUTS FOR EMBANKMENTS

CONSTRUCTION DETAILS

NO SCALE

C-10

REVISED BY | DATE REVISED
DAC LE | KRISHNA SERAN
CALCULATED-DESIGNED BY | CHECKED BY
FUNCTIONAL SUPERVISOR | KEN KEATON
STATE OF CALIFORNIA - DEPARTMENT OF TRANSPORTATION
Caltrans® DESIGN

LAST REVISION 00-00-00 | DATE PLOTTED => 01-JUL-2014 | TIME PLOTTED => 10:59

Dist	COUNTY	ROUTE	POST MILES TOTAL PROJECT	SHEET No.	TOTAL SHEETS
03	Pla	267	0.0/6.8	14	65

T. Krishnakumary 5-12-14
REGISTERED CIVIL ENGINEER DATE

5-12-14
PLANS APPROVAL DATE

REGISTERED PROFESSIONAL ENGINEER
KRISHNAKUMARY THAMILSERAN
No. C79630
Exp. 9/30/14
CIVIL
STATE OF CALIFORNIA

THE STATE OF CALIFORNIA OR ITS OFFICERS OR AGENTS SHALL NOT BE RESPONSIBLE FOR THE ACCURACY OR COMPLETENESS OF SCANNED COPIES OF THIS PLAN SHEET.

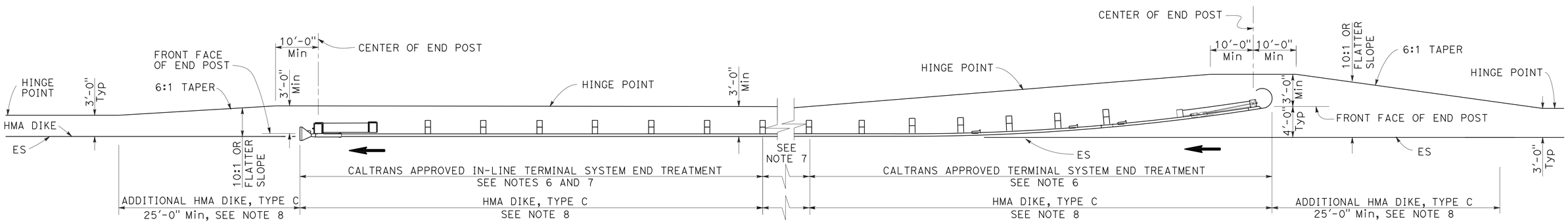

TYPE 11H LAYOUT

(EMBANKMENT GUARD RAILING INSTALLATION WITH FLARED END TREATMENT
AND AN IN-LINE TREATMENT AT THE ENDS OF RAILING)
SEE NOTES 5 AND 8

NOTES:

1. LINE POST, BLOCKS AND HARDWARE TO BE USED ARE SHOWN ON CONSTRUCTION DETAILS SHEETS C-5, C-6, AND C-7.
2. GUARD RAIL POST SPACING TO BE 6'-3" CENTER TO CENTER, EXCEPT AS OTHERWISE NOTED.
3. EXCEPT AS NOTED, LINE POSTS ARE 6" X 8" X 6'-0" WOOD WITH 6" X 8" X 1'-2" WOOD BLOCKS. W6 X 9 STEEL POSTS, 6'-0" IN LENGTH, WITH 6" X 8" X 1'-2" NOTCHED WOOD BLOCKS OR PLASTIC BLOCKS MAY BE USED FOR 6" X 8" X 6'-0" WOOD POST WITH 6" X 8" X 1'-2" WOOD BLOCKS WHERE APPLICABLE AND WHEN SPECIFIED.
4. DIRECTION OF ADJACENT TRAFFIC INDICATED BY ⟶.
5. LAYOUT TYPE 11H, SHOWN ON THE CONTRACT PLAN SHEETS, ARE TYPICALLY USED WHERE GUARD RAILING IS RECOMMENDED TO SHIELD EMBANKMENT SLOPES AND A CRASHWORTHY END TREATMENT IS REQUIRED FOR BOTH DIRECTIONS OF TRAFFIC.
6. THE TYPE OF TERMINAL SYSTEM END TREATMENT TO BE USED WILL BE SHOWN ON THE PROJECT PLANS.
7. DEPENDENT ON SITE CONDITIONS (EMBANKMENT HEIGHT AND SIDE SLOPE), CONSTRUCTION OF ADDITIONAL GUARD RAILING (LENGTH EQUAL TO MULTIPLES OF 12'-6" WITH 6'-3" POST SPACING) MAY BE ADVISABLE.
8. WHERE PLACEMENT OF DIKE IS REQUIRED WITH GUARD RAILING INSTALLATIONS, SEE CONSTRUCTION DETAILS SHEET C-9 FOR DIKE POSITIONING DETAILS.

METAL BEAM GUARD RAILING TYPICAL LAYOUTS FOR EMBANKMENTS

CONSTRUCTION DETAILS

NO SCALE

C-11

STATE OF CALIFORNIA - DEPARTMENT OF TRANSPORTATION
Caltrans® DESIGN
FUNCTIONAL SUPERVISOR: KEN KEATON
CALCULATED-DESIGNED BY: DAC LE
CHECKED BY: KRISHNA SERAN
REVISED BY
DATE REVISED

LAST REVISION 00-00-00
DATE PLOTTED => 01-JUL-2014
TIME PLOTTED => 10:59

Dist	COUNTY	ROUTE	POST MILES TOTAL PROJECT	SHEET No.	TOTAL SHEETS
03	Pla	267	0.0/6.8	15	65

REGISTERED CIVIL ENGINEER 5-12-14 DATE

5-12-14
PLANS APPROVAL DATE

REGISTERED PROFESSIONAL ENGINEER KRISHNAKUMARY THAMILSERAN No. C79630 Exp. 9/30/14 CIVIL STATE OF CALIFORNIA

THE STATE OF CALIFORNIA OR ITS OFFICERS OR AGENTS SHALL NOT BE RESPONSIBLE FOR THE ACCURACY OR COMPLETENESS OF SCANNED COPIES OF THIS PLAN SHEET.

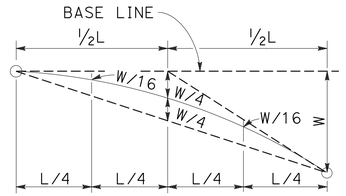

TYPICAL PARABOLIC LAYOUT

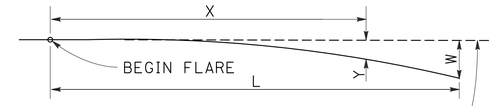

$$Y = \frac{WX^2}{L^2}$$

Y = OFFSET FROM BASE LINE
W = MAXIMUM OFFSET
X = DISTANCE ALONG BASE LINE
L = LENGTH OF FLARE

PARABOLIC FLARE OFFSETS

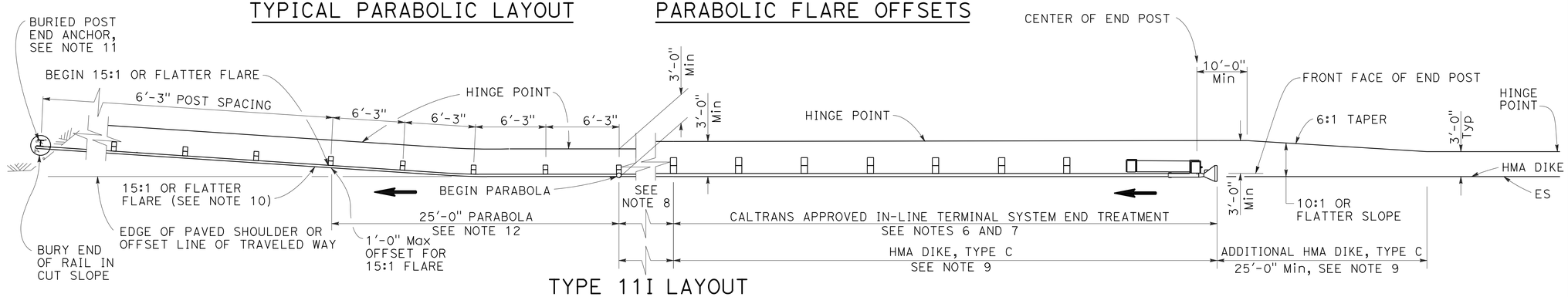

TYPE 11I LAYOUT

(EMBANKMENT GUARD RAILING INSTALLATION WITH IN-LINE END TREATMENT AND A BURIED END ANCHOR TREATMENT AT THE ENDS OF RAILING)
SEE NOTE 5

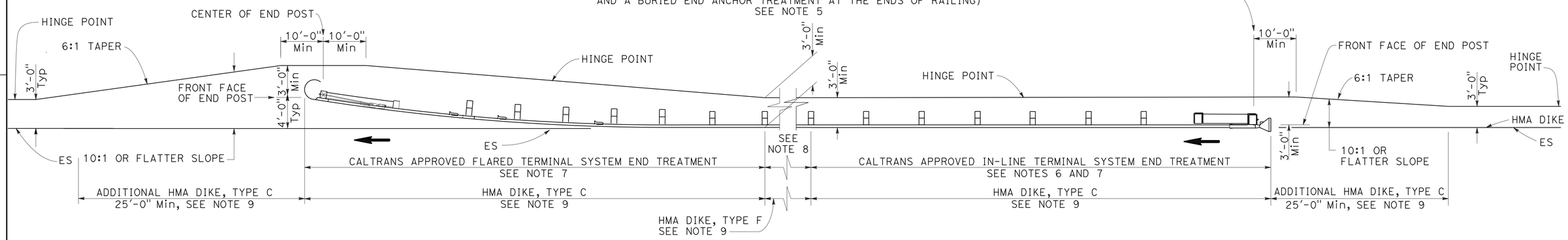

TYPE 11J LAYOUT

(EMBANKMENT GUARD RAILING INSTALLATION WITH IN-LINE END TREATMENT AND FLARED END TREATMENT AT THE ENDS OF RAILING)
SEE NOTE 5

NOTES:

1. LINE POST, BLOCKS AND HARDWARE TO BE USED ARE SHOWN ON CONSTRUCTION DETAILS SHEETS C-5, C-6, AND C-7.
2. GUARD RAIL POST SPACING TO BE 6'-3" CENTER TO CENTER, EXCEPT AS OTHERWISE NOTED.
3. EXCEPT AS NOTED, LINE POSTS ARE 6" X 8" X 6'-0" WOOD WITH 6" X 8" X 1'-2" WOOD BLOCKS. W6 X 9 STEEL POSTS, 6'-0" IN LENGTH, WITH 6" X 8" X 1'-2" NOTCHED WOOD BLOCKS OR PLASTIC BLOCKS MAY BE USED FOR 6" X 8" X 6'-0" WOOD POST WITH 6" X 8" X 1'-2" WOOD BLOCKS WHERE APPLICABLE AND WHEN SPECIFIED.
4. DIRECTION OF ADJACENT TRAFFIC INDICATED BY ⟶.
5. LAYOUT TYPES 11F AND 11J, SHOWN ON THE CONSTRUCTION DETAILS SHEETS, ARE TYPICALLY USED WHERE GUARD RAILING IS RECOMMENDED TO SHIELD EMBAMKMENT SLOPES AND A CRASHWORTHY END TREATMENT IS REQUIRED FOR BOTH DIRECTIONS OF TRAFFIC.
6. IN-LINE TERMINAL SYSTEM END TREATMENTS ARE USED WHERE SITE CONDITIONS WILL NOT ACCOMMODATE A FLARED END TREATMENT.
7. THE TYPE OF TERMINAL SYSTEM END TREATMENT TO BE USED WILL BE SHOWN ON THE PROJECT PLANS.
8. DEPENDENT ON SITE CONDITIONS (EMBANKMENT HEIGHT AND SIDE SLOPE), CONSTRUCTION OF ADDITIONAL GUARD RAILING (LENGTH EQUAL TO MULTIPLES OF 12'-6" WITH 6'-3" POST SPACING) MAY BE ADVISABLE.
9. WHERE PLACEMENT OF DIKE IS REQUIRED WITH GUARD RAILING INSTALLATIONS, SEE CONSTRUCTION DETAILS SHEET C-9 FOR DIKE POSITIONING DETAILS.
10. THE 15:1 OR FLATTER FLARE USED WITH BURIED END ANCHORS IS BASED ON THE EDGE OF THE PAVED SHOULDER OR OFFSET LINE OF EDGE OF THE TRAVELED WAY. THE LENGTH OF GUARD RAILING WITHIN THE 15:1 OR FLATTER FLARE IS BASED ON SITE CONDITIONS AND SHOULD BE A LENGTH EQUAL TO MULTIPLES OF 12'-6".
11. FOR DETAILS OF THE BURIED POST END ANCHOR USED WITH TYPE 11I LAYOUT, SEE REVISED STANDARD PLAN SHEET RSPA77L3.
12. FOR TYPICAL FLARE OFFSETS FOR 25'-0" LENGTH PARABOLA WITH MAXIMUM OFFSET OF 1'-0", SEE CONSTRUCTION DETAIL SHEET C-10.

METAL BEAM GUARD RAILING TYPICAL LAYOUTS FOR EMBANKMENTS

CONSTRUCTION DETAILS

NO SCALE

C-12

REVISED BY | DATE REVISED
DAC LE | KRISHNA SERAN
CALCULATED-DESIGNED BY | CHECKED BY
FUNCTIONAL SUPERVISOR | KEN KEATON
STATE OF CALIFORNIA - DEPARTMENT OF TRANSPORTATION
Caltrans DESIGN

LAST REVISION 00-00-00 | DATE PLOTTED => 01-JUL-2014 | TIME PLOTTED => 10:59

Dist	COUNTY	ROUTE	POST MILES TOTAL PROJECT	SHEET No.	TOTAL SHEETS
03	Pla	267	0.0/6.8	16	65

REGISTERED CIVIL ENGINEER 5-12-14 DATE

5-12-14
PLANS APPROVAL DATE

REGISTERED PROFESSIONAL ENGINEER KRISHNAKUMARY THAMIL SERAN No. C79630 Exp. 9/30/14 CIVIL STATE OF CALIFORNIA

THE STATE OF CALIFORNIA OR ITS OFFICERS OR AGENTS SHALL NOT BE RESPONSIBLE FOR THE ACCURACY OR COMPLETENESS OF SCANNED COPIES OF THIS PLAN SHEET.

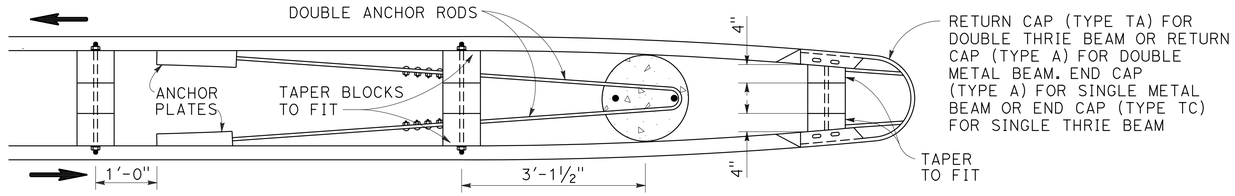

PLAN
See Note 4

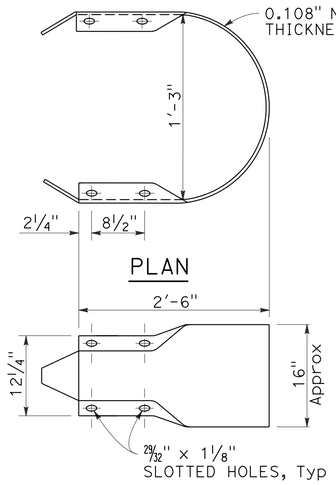

PLAN

ELEVATION
RETURN CAP
(TYPE A)

NOTES:

1. FOR TYPICAL USE OF THIS TYPE OF END ANCHOR, SEE REVISED STANDARD PLAN RSP A78E2.
2. ANCHOR CABLE TO BE PARALLEL TO RAILING FOR STRAIGHT RUNS OF RAIL. ANCHOR CABLE MAY HAVE ANGLE POINT AT ANCHOR PLATE IF RAILING IS CURVED.
3. ANCHOR ROD HOOKS TO BE IN CONTACT WITH ANCHOR REINFORCEMENT WHEN CONCRETE IS PLACED. WIRE TIES MAY BE USED TO POSITION ANCHOR RODS.
4. SINGLE SIDED RAILING INSTALLATIONS REQUIRE ONLY ONE ANCHOR PLATE, ANCHOR ROD AND ANCHOR CABLE. SINGLE SIDED RAILING WILL NOT HAVE A RAIL ELEMENT OR BLOCKOUTS ON BACKSIDE OF LINE POSTS AS SHOWN IN THE PLAN VIEW.

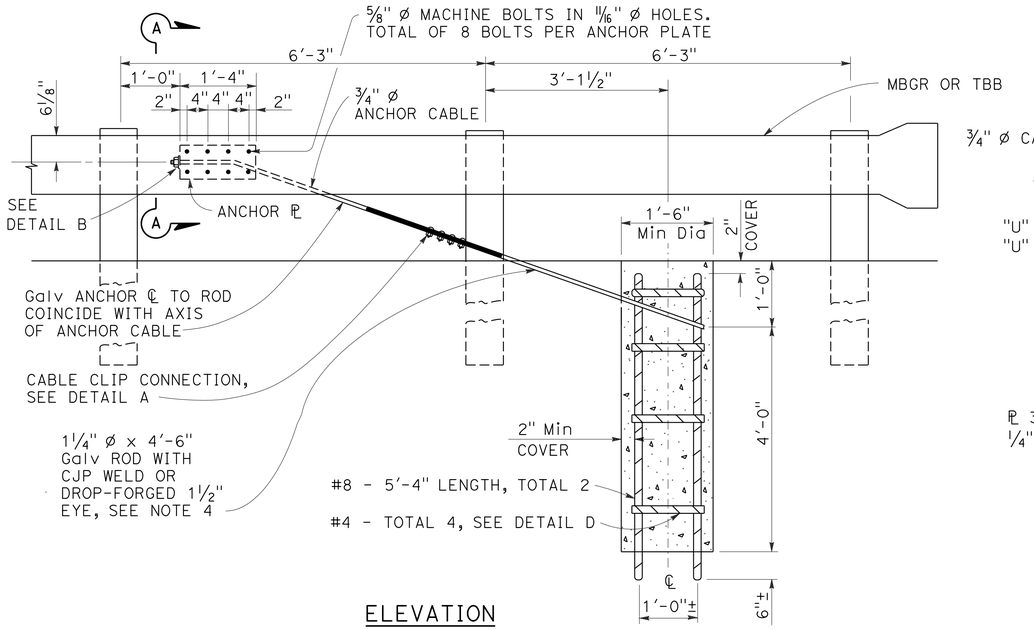

ELEVATION
END ANCHOR ASSEMBLY
(TYPE CA)
(WOOD POST, METAL BEAM GUARD RAILING SHOWN, DETAILS SIMILAR FOR THRIE BEAM BARRIER.)

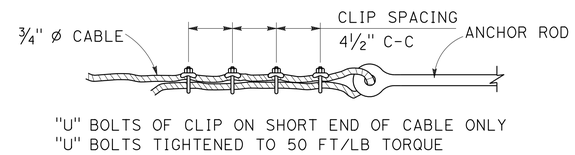

DETAIL A
CABLE CLIP CONNECTION

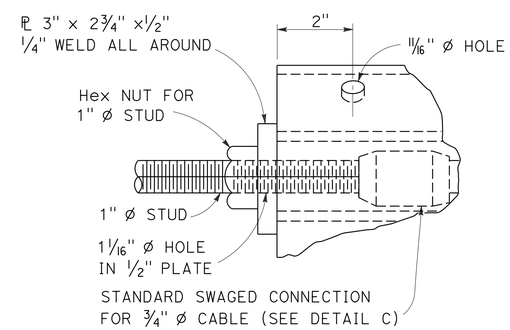

DETAIL B

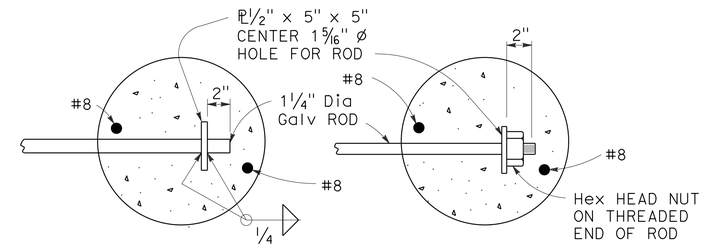

OPTIONAL ENDS ON SINGLE ANCHOR ROD
(NOT TO BE USED FOR DOUBLE ANCHORS)

NOTE:
USE TWO 1 ¼" Ø GALV RODS WITH HOOK AND EYE FOR DOUBLE GUARD RAIL ANCHOR.

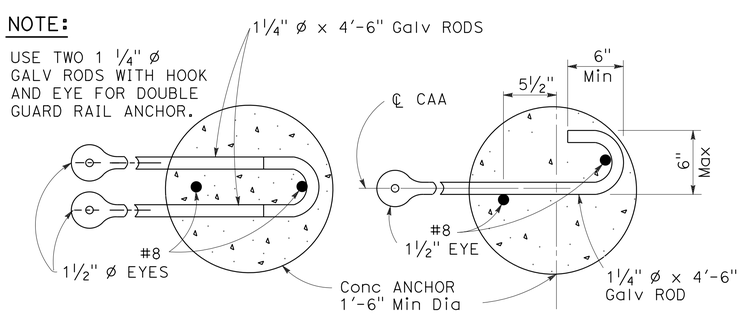

DOUBLE ANCHOR SINGLE ANCHOR

ANCHOR RODS

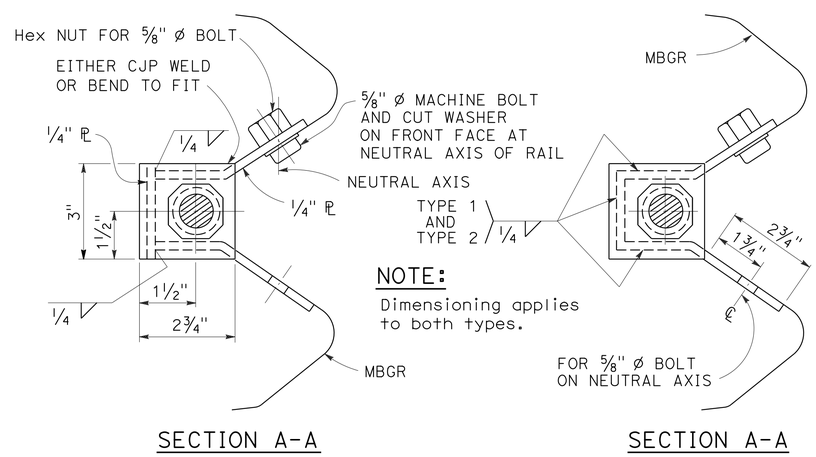

SECTION A-A
(ALTERNATIVE TYPE 1)

SECTION A-A
(ALTERNATIVE TYPE 2)

NOTE:
Dimensioning applies to both types.

ANCHOR PLATE DETAILS

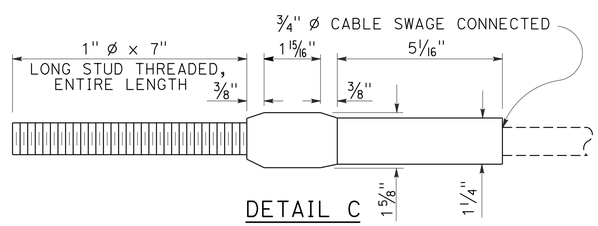

DETAIL C
ANCHOR CABLE WITH
SWAGED FITTING AND STUD

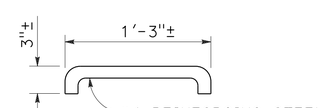

DETAIL D

CONSTRUCTION DETAILS
NO SCALE
C-13

STATE OF CALIFORNIA - DEPARTMENT OF TRANSPORTATION
Caltrans® DESIGN
FUNCTIONAL SUPERVISOR KEN KEATON
CALCULATED-DESIGNED BY DAC LE
CHECKED BY KRISHNA SERAN
REVISED BY
DATE REVISED

LAST REVISION 00-00-00
DATE PLOTTED => 01-JUL-2014
TIME PLOTTED => 10:59

Dist	COUNTY	ROUTE	POST MILES TOTAL PROJECT	SHEET No.	TOTAL SHEETS
03	Pla	267	0.0/6.8	17	65

T. Krishnakumary 5-12-14
REGISTERED CIVIL ENGINEER DATE

5-12-14
PLANS APPROVAL DATE

REGISTERED PROFESSIONAL ENGINEER
KRISHNAKUMARY THAMILSERAN
No. C79630
Exp. 9/30/14
CIVIL
STATE OF CALIFORNIA

THE STATE OF CALIFORNIA OR ITS OFFICERS OR AGENTS SHALL NOT BE RESPONSIBLE FOR THE ACCURACY OR COMPLETENESS OF SCANNED COPIES OF THIS PLAN SHEET.

NOTES:

1. FOR ACCURATE RIGHT OF WAY, CONTACT RIGHT OF WAY ENGINEERING AT THE DISTRICT OFFICE.
2. POSITIVE LOCATION OF EXISTING UTILITIES MUST BE OBTAINED PRIOR TO EXCAVATION
3. NOT ALL UTILITIES OUTSIDE THE STATE RIGHT OF WAY ARE SHOWN.
4. FOR DETAILS NOT SHOWN SEE STANDARD PLAN D102

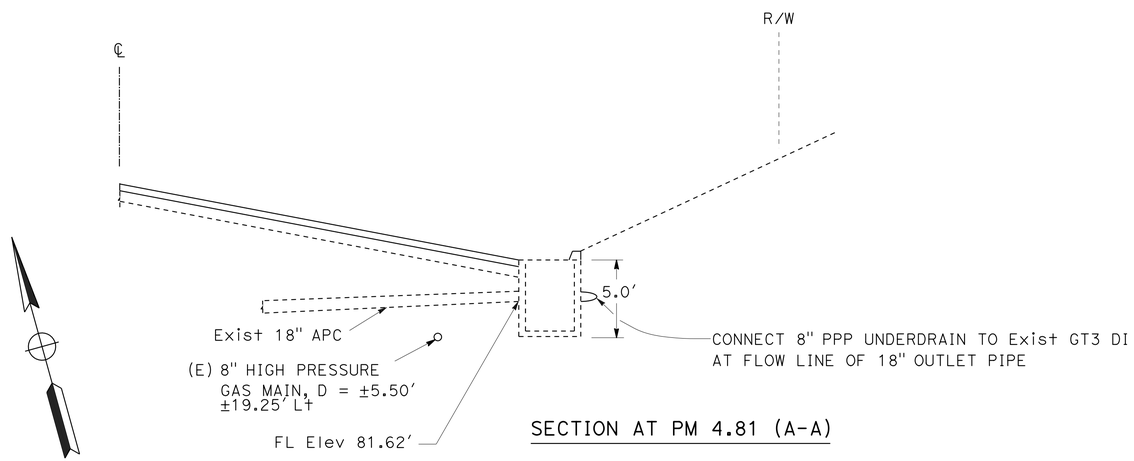

SECTION AT PM 4.81 (A-A)

ABBREVIATIONS:

PH - POTHOLE
ED - ELECTRONIC DETECTION
PSIG - POUNDS PER SQUARE INCH GAUGE PRESSURE

LEGEND:

POTHOLE LOCATION

UTILITY - OWNERSHIP:

GAS - SOUTHWEST GAS CORPORATION (SOUTHWEST)

POSITIVE LOCATION INFORMATION

PH/ED	UTILITY/OWNER	DESCRIPTION	NORTH/EASTING	*ELEV	**DEPTH
PH 1	GAS/SOUTHWEST	8" STEEL (220 PSIG)	7099482.464/2231244.238	6427.70′	65"
ED 1	GAS/SOUTHWEST	8" STEEL (220 PSIG)	7099509.671/2231207.782	6432.73′	36"
ED 2	GAS/SOUTHWEST	8" STEEL (220 PSIG)	7099545.170/2231166.734	6436.05′	36"
PH 2	GAS/SOUTHWEST	8" STEEL (220 PSIG)	7099579.409/2231132.031	6439.21′	33"
ED 3	GAS/SOUTHWEST	8" STEEL (220 PSIG)	7099613.792/2231098.079	6441.91′	36"
ED 4	GAS/SOUTHWEST	8" STEEL (220 PSIG)	7099643.831/2231072.462	6444.00′	38"
PH 3	GAS/SOUTHWEST	8" STEEL (220 PSIG)	7099692.256/2231034.884	6447.58′	39"
ED 5	GAS/SOUTHWEST	8" STEEL (220 PSIG)	7099735.296/2231005.379	6451.35′	34"
ED 6	GAS/SOUTHWEST	8" STEEL (220 PSIG)	7099777.508/2230979.428	6454.21′	37"
PH 4	GAS/SOUTHWEST	8" STEEL (220 PSIG)	7099818.182/2230956.645	6456.88′	41"
ED 7	GAS/SOUTHWEST	8" STEEL (220 PSIG)	7099873.525/2230930.932	6460.44′	49"
PH 5	GAS/SOUTHWEST	8" STEEL (220 PSIG)	7099910.062/2230916.342	6467.05′	

* ELEVATION IS TO TOP OF PIPE.
** DEPTH IS DISTANCE FROM ORIGINAL GROUND TO TOP OF PIPE.

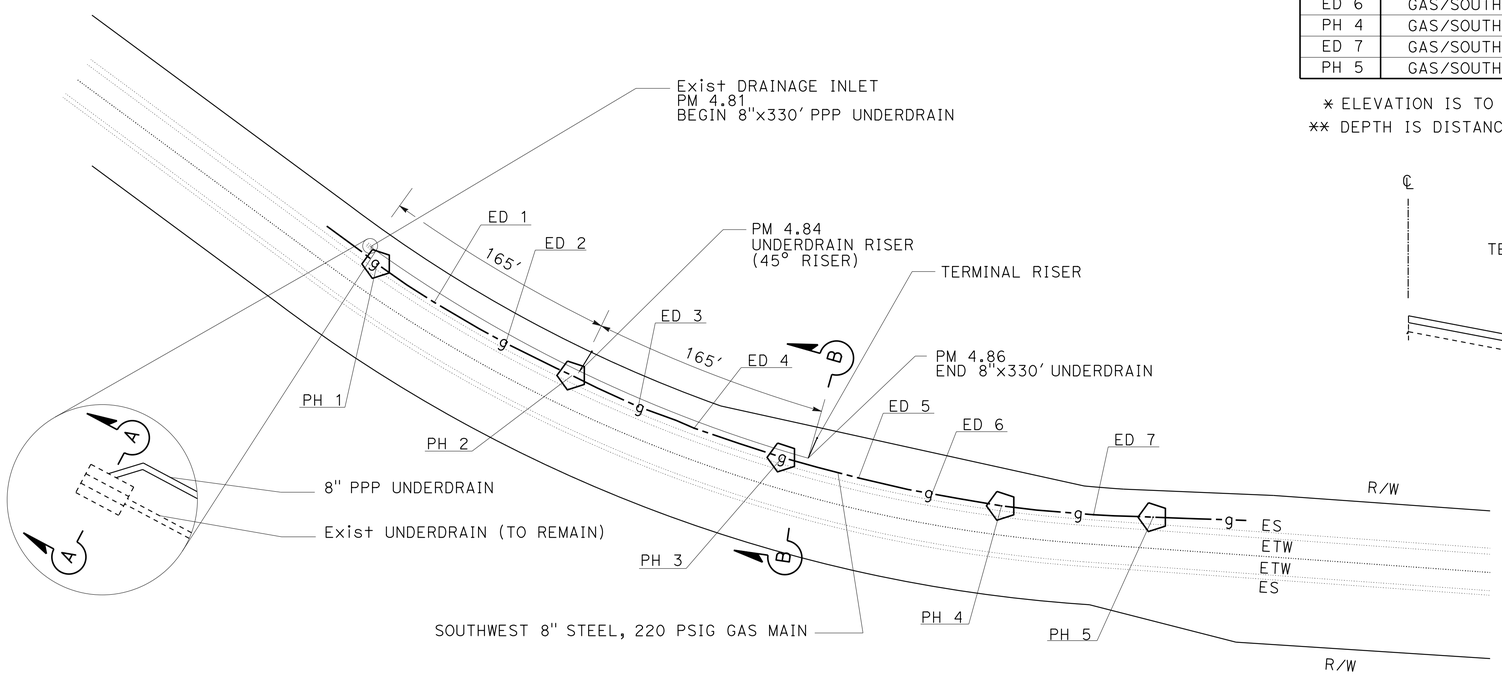

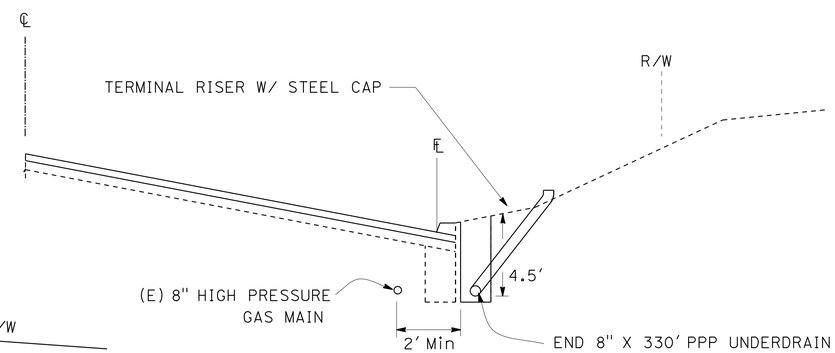

SECTION AT PM 4.86 (B-B)

THIS PLAN ACCURATE FOR UNDERDRAIN WORK ONLY

DRAINAGE PLAN

NO SCALE **D-1**

STATE OF CALIFORNIA - DEPARTMENT OF TRANSPORTATION
Caltrans® DESIGN
FUNCTIONAL SUPERVISOR: KEN KEATON
CALCULATED-DESIGNED BY: DAC LE
CHECKED BY: KRISHNA SERAN
REVISED BY
DATE REVISED

LAST REVISION 00-00-00
DATE PLOTTED => 01-JUL-2014
TIME PLOTTED => 10:59

Dist	COUNTY	ROUTE	POST MILES TOTAL PROJECT	SHEET No.	TOTAL SHEETS
03	Pla	267	0.0/6.8	18	65

T. Krishnakumary 5-12-14
REGISTERED CIVIL ENGINEER DATE

5-12-14
PLANS APPROVAL DATE

REGISTERED PROFESSIONAL ENGINEER
KRISHNAKUMARY THAMIL SERAN
No. C79630
Exp. 9/30/14
CIVIL
STATE OF CALIFORNIA

THE STATE OF CALIFORNIA OR ITS OFFICERS OR AGENTS SHALL NOT BE RESPONSIBLE FOR THE ACCURACY OR COMPLETENESS OF SCANNED COPIES OF THIS PLAN SHEET.

STATIONARY MOUNTED CONSTRUCTION AREA SIGNS

SIGN LETTER	SIGN CODE FEDERAL	SIGN CODE CALIFORNIA	PANEL SIZE	SIGN MESSAGE	NUMBER OF POST AND SIZE	NUMBER OF SIGNS
A	G20-1[Spec](7)		60"x30"	ROAD WORK NEXT 7 MILES	2 - 4"X6"	2
B		C40(Mod)	48"x36"	TRAFFIC FINES DOUBLED IN WORK ZONE	1 - 4"X6"	2
C	G20-2	C14	36"x18"	END ROAD WORK	1 - 4"X4"	9
D	W20-1	C23	48"x48"	ROAD WORK AHEAD	1 - 6"X6"	7
E	W11-1	W79	36"x36"	BICYCLE (SYMBOL) SIGN	1 - 6"X6"	2
	W16-1	W79A	24"x30"	SHARE THE ROAD		2

NOTE:
LOCATION OF CONSTRUCTION AREA SIGNS ARE APPROXIMATE. EXACT LOCATIONS TO BE DETERMINED BY THE ENGINEER.

LEGEND:

- ⊗ CONSTRUCTION AREA SIGN LETTER
- SIGN - TWO POSTS
- SIGN - SINGLE POST

SIGN DETAILS

A G20-1[Spec](7)

ROAD WORK
NEXT 7 MILES

6" C SERIES LETTERS

60"x30"

RETROREFLECTIVE ORANGE BACKGROUND WITH BLACK LEGEND AND BORDER.

B C40(Mod)<CA>

TRAFFIC FINES
DOUBLED IN
WORK ZONES

4" D SERIES LETTERS

48"x36"

RETROREFLECTIVE WHITE BACKGROUND WITH BLACK LEGEND AND BORDER.

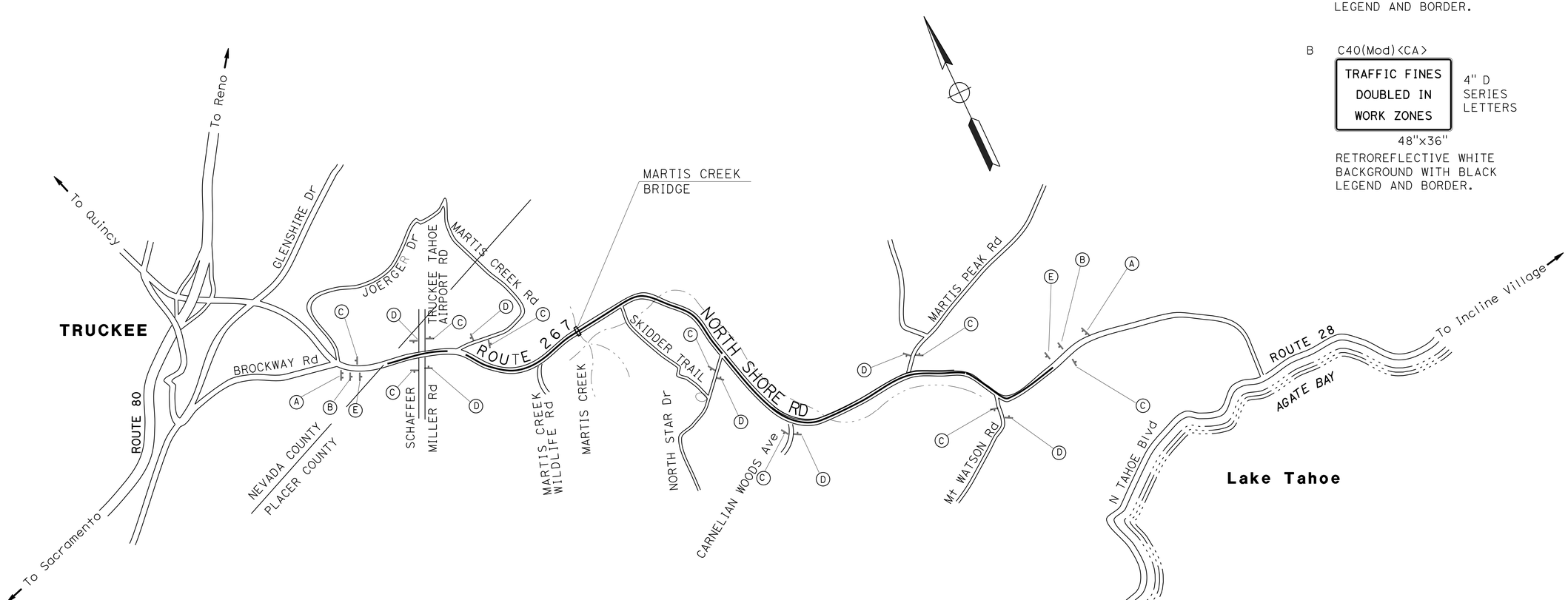

APPROVED FOR CONSTRUCTION AREA SIGN WORK ONLY

CONSTRUCTION AREA SIGNS

NO SCALE

CS-1

STATE OF CALIFORNIA - DEPARTMENT OF TRANSPORTATION
Caltrans® DESIGN

FUNCTIONAL SUPERVISOR: KEN KEATON
CALCULATED-DESIGNED BY: TEMESGEN GETAHOUN
CHECKED BY: KRISHNA SERAN
REVISED BY / DATE REVISED

LAST REVISION 00-00-00
DATE PLOTTED => 01-JUL-2014
TIME PLOTTED => 10:59

Dist	COUNTY	ROUTE	POST MILES TOTAL PROJECT	SHEET No.	TOTAL SHEETS
03	Pla	267	0.0/6.8	19	65

T. Krishnakumary 5-12-14
REGISTERED CIVIL ENGINEER DATE

5-12-14
PLANS APPROVAL DATE

REGISTERED PROFESSIONAL ENGINEER
KRISHNAKUMARY THAMILSERAN
No. C79630
Exp. 9/30/14
CIVIL
STATE OF CALIFORNIA

THE STATE OF CALIFORNIA OR ITS OFFICERS OR AGENTS SHALL NOT BE RESPONSIBLE FOR THE ACCURACY OR COMPLETENESS OF SCANNED COPIES OF THIS PLAN SHEET.

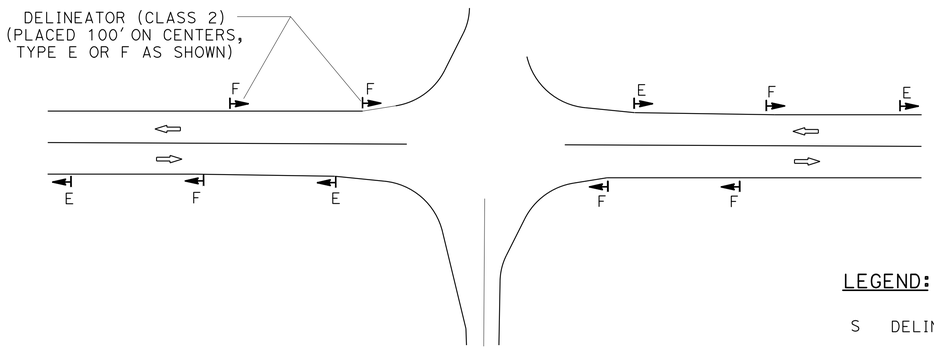

INTERSECTION DELINEATOR PLACEMENT (TYPICAL)

NO SCALE

LEGEND:

S DELINEATOR SPACING

⇨ DIRECTION OF TRAVEL

DELINEATOR

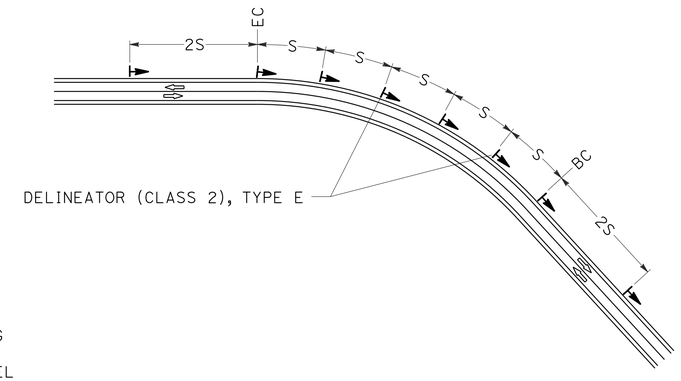

HORIZONTAL CURVE DELINEATOR PLACEMENT (TYPICAL)

NO SCALE

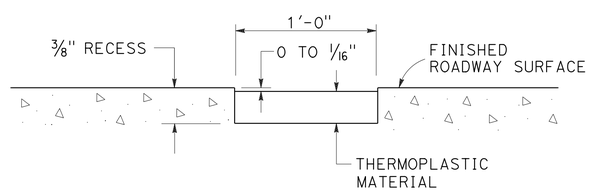

RECESSING DETAIL
(FOR LIMIT LINE AND CROSSWALK)
NO SCALE

PAVEMENT DELINEATION DETAILS

PDD-1

STATE OF CALIFORNIA - DEPARTMENT OF TRANSPORTATION
Caltrans
DESIGN

FUNCTIONAL SUPERVISOR: KEN KEATON

CALCULATED-DESIGNED BY: DAC LE
CHECKED BY: JOHN KEBER

REVISED BY | DATE REVISED

LAST REVISION 00-00-00 | DATE PLOTTED => 01-JUL-2014 | TIME PLOTTED => 10:59

Dist	COUNTY	ROUTE	POST MILES TOTAL PROJECT	SHEET No.	TOTAL SHEETS
03	Pla	267	0.0/6.8	20	65

T. Krishnakumary 5-12-14
REGISTERED CIVIL ENGINEER DATE

5-12-14
PLANS APPROVAL DATE

REGISTERED PROFESSIONAL ENGINEER
KRISHNAKUMARY THAMILSERAN
No. C79630
Exp. 9/30/14
CIVIL
STATE OF CALIFORNIA

THE STATE OF CALIFORNIA OR ITS OFFICERS OR AGENTS SHALL NOT BE RESPONSIBLE FOR THE ACCURACY OR COMPLETENESS OF SCANNED COPIES OF THIS PLAN SHEET.

THERMOPLASTIC TRAFFIC STRIPING

LOCATION		4" THERMOPLASTIC TRAFFIC STRIPE (RECESSED)			4" THERMOPLASTIC TRAFFIC STRIPE (RECESSED BROKEN 36-12)			8" THERMOPLASTIC TRAFFIC STRIPE (RECESSED)	4" THERMOPLASTIC TRAFFIC STRIPE (RECESSED BROKEN 12-3)	4" THERMOPLASTIC TRAFFIC STRIPE (RECESSED BROKEN 6-1)	DESCRIPTION
		DETAIL NUMBER			DETAIL NUMBER			DETAIL NUMBER	DETAIL NUMBER	DETAIL NUMBER	
		18	21	27B	5	18	11	38A	27C	40	
FROM PM	TO PM	LF	LF	LF	LF	LF	LF	LF	LF	LF	
0.00	0.03		696	330							
0.03	0.05								208		INTERSECTION
0.05	0.12		770	770							
0.12	0.21		1,816	908							
0.21	0.24		348	348				312			RIGHT AND LEFT TURN LANES
0.26	0.31		520	518				260			LEFT TURN LANE
0.31	0.41		2,068	1,034							
0.41	0.46		518	517							
0.46	0.65	1,024		2,048		1,024					ALLOW PASSING NB TO TRUCKEE
0.65	0.70		528	528							Pls 267 & MARTIS CREEK Rd
1.20	1.28	422				422					
1.20	1.51			3,272							
1.28	1.51				1,236						
1.51	1.58	359		718		359					ALLOW PASSING NB
1.58	1.65		708	708							
1.65	1.83	972		1,944		972					ALLOW PASSING SB
1.83	2.35			5,480	2,740						
2.35	2.47	634		1,268		634					ALLOW PASSING NB
2.47	2.79		3,390	3,390							
2.79	3.03	1,268		2,536		1,268					ALLOW PASSING NB
3.03	3.23	1,056		2,112		1,056					ALLOW PASSING SB
3.23	3.46	1,214		2,428		1,214					ALLOW PASSING NB
3.46	3.74		2,956	2,956			168	296			RIGHT TURN LANE
3.74	3.76									110	Pla 267 & NORTHSTAR Dr
3.76	3.86		1,004	1,004				428			LEFT TURN LANE
3.86	3.95		2,068	1,035							
3.95	4.01		592	591							
4.01	4.08		1,520	760				185			
SHEET TOTAL		6,949	19502	37,203	3,976	6,949	168	1481	208	110	

NOTE: EXISTING CENTERLINE PATTERNS MAY BE DIFFERENT FROM THE DETAILS SHOWN ABOVE.

PAVEMENT DELINEATION QUANTITIES
PDQ-1

REVISED BY | DATE REVISED
KRISHNA SERAN | JOHN KEBER
CALCULATED-DESIGNED BY | CHECKED BY
FUNCTIONAL SUPERVISOR: KEN KEATON
STATE OF CALIFORNIA - DEPARTMENT OF TRANSPORTATION
Caltrans® DESIGN

LAST REVISION 00-00-00 | DATE PLOTTED => 01-JUL-2014 | TIME PLOTTED => 10:59

Dist	COUNTY	ROUTE	POST MILES TOTAL PROJECT	SHEET No.	TOTAL SHEETS
03	Pla	267	0.0/6.8	21	65

T. Krishnakumary 5-12-14
REGISTERED CIVIL ENGINEER DATE

5-12-14
PLANS APPROVAL DATE

REGISTERED PROFESSIONAL ENGINEER
KRISHNAKUMARY THAMIL SERAN
No. C79630
Exp. 9/30/14
CIVIL
STATE OF CALIFORNIA

THE STATE OF CALIFORNIA OR ITS OFFICERS OR AGENTS SHALL NOT BE RESPONSIBLE FOR THE ACCURACY OR COMPLETENESS OF SCANNED COPIES OF THIS PLAN SHEET.

THERMOPLASTIC TRAFFIC STRIPING

LOCATION		4" THERMOPLASTIC TRAFFIC STRIPE (RECESSED)			4" THERMOPLASTIC TRAFFIC STRIPE (RECESSED BROKEN 36-12)			8" THERMOPLASTIC TRAFFIC STRIPE (RECESSED)	4" THERMOPLASTIC TRAFFIC STRIPE (RECESSED BROKEN 12-3)	4" THERMOPLASTIC TRAFFIC STRIPE (RECESSED BROKEN 6-1)	DESCRIPTION
		DETAIL NUMBER			DETAIL NUMBER			DETAIL NUMBER	DETAIL NUMBER	DETAIL NUMBER	
FROM PM	TO PM	18	21	27B	5	18	11	38A	27C	40	
		LF	LF	LF	LF	LF	LF	LF	LF	LF	
4.08	4.10								140		Pla 267 & HIGHLANDS VIEW Rd
4.10	4.21		1,194	1,194				518			
4.21	4.61		2,872	1,436							
4.35	4.61	1,394		2,788		1,394					ALLOW PASSING SB
4.61	4.80		2,006	2,006							
4.80	5.07	1,426		2,852		1,426					ALLOW PASSING SB
5.07	5.21		1,478	1,478							
5.21	5.36	824		1,647		824					ALLOW PASSING SB
5.36	5.60			2,513	1,257						
5.60	5.80	1,040		2,080		1,040					ALLOW PASSING NB
5.80	6.09		3,126	3,126							
6.09	6.32		2,440	2,213			1,220				
6.21	6.25								227		Pla 267 & MARTIS PEAK Rd
6.32	6.80		5,048	5,048							
6.77	6.80								160		Pla 267 & CARNELIAN WOODS Ave
SHEET TOTAL		4,684	18,164	28,381	1,257	4,684	1,220	518	527	0	
SHEET TOTAL FROM PDQ-1		6,949	19,502	37,203	3,976	6,949	168	1,481	208	110	
SUBTOTAL		11,633	37,666	65,584	5,233	11,633	1,388	1,999	735	110	
TOTAL		114,883			18,254			1,999	735	110	

TWO-COMPONENT PAINT PAVEMENT MARKING

LOCATION		TYPE III (L) ARROW		TYPE III (R) ARROW		TYPE VI		SIGNAL		AHEAD		STOP		DESCRIPTION
		NUMBER	SQFT	NUMBER	SQFT	NUMBER	SQFT	NUMBER	SQFT	NUMBER	SQFT	NUMBER	SQFT	
0.03	0.05											2	44	INTERSECTION
0.24	0.26	4	168	2	84			2	64	2	62			Pla 267 & TRUCKEE TAHOE AIRPORT Rd
3.74	3.76	5	210	3	126	1	42	2	64	2	62			Pla 267 & NORTHSTAR Dr
4.08	4.10	4	168	2	84							2	44	Pla 267 & HIGHLANDS VIEW Rd
6.21	6.25											1	22	Pla 267 & MARTIS PEAK Rd
6.77	6.80											1	22	Pla 267 & CARNELIAN WOODS Ave
SUBTOTAL			546		294		42		128		124		134	
TOTAL		1,266												

PAVEMENT DELINEATION QUANTITIES
PDQ-2

STATE OF CALIFORNIA - DEPARTMENT OF TRANSPORTATION
Caltrans DESIGN

FUNCTIONAL SUPERVISOR: KEN KEATON
CALCULATED-DESIGNED BY: KRISHNA SERAN
CHECKED BY: JOHN KEBER
REVISED BY
DATE REVISED

LAST REVISION 00-00-00
DATE PLOTTED => 01-JUL-2014
TIME PLOTTED => 10:59

Dist	COUNTY	ROUTE	POST MILES TOTAL PROJECT	SHEET No.	TOTAL SHEETS
03	Pla	267	0.0/6.8	22	65

T. Krishnakumary 5-12-14
REGISTERED CIVIL ENGINEER DATE

5-12-14
PLANS APPROVAL DATE

REGISTERED PROFESSIONAL ENGINEER
KRISHNAKUMARY THAMILSERAN
No. C79630
Exp. 9/30/14
CIVIL
STATE OF CALIFORNIA

THE STATE OF CALIFORNIA OR ITS OFFICERS OR AGENTS SHALL NOT BE RESPONSIBLE FOR THE ACCURACY OR COMPLETENESS OF SCANNED COPIES OF THIS PLAN SHEET.

NOTE: ALL CROSSWALKS SHALL BE 1'-0" BASIC.

THERMOPLASTIC PAVEMENT MARKING (RECESSED)

LOCATION		LIMIT LINE		CROSSWALK		COMMENTS
		NUMBER	SQFT	NUMBER	SQFT	
0.03	0.05	2	60			INTERSECTION
0.24	0.26			4	615	Pla 267 & TRUCKEE TAHOE AIRPORT Rd CROSSWALK ON ALL FOUR LEGS
3.74	3.76	2	71	1	158	Pla 267 & NORTHSTAR DR LIMIT LINE ON SB, CROSSWALK ON NB & SIDE
4.08	4.10	1	33			Pla 267 & HIGHLANDS VIEW Rd
6.21	6.25	1	50			Pla 267 & MARTIS PEAK Rd
6.77	6.80	1	36			Pla 267 & CARNELIAN WOODS Ave
SUBTOTAL		250		773		
TOTAL		1,023				

DELINEATORS

DIRECTION		Approx PM		LOCATION DESCRIPTION	DELINEATOR (CLASS 2)		DELINEATOR PLACEMENT (N)		DELINEATOR SPACING (S) (N)	PLACEMENT NOTES
					TYPE E	TYPE F	INTERSECTION	CURVE		
NB	SB				EA	EA			FT	
X	X	0.25	0.25	TRUCKEE TAHOE AIRPORT Rd	4	6	X		100	
X		0.67	0.90		12			X	158	
	X	1.24	1.51		16			X	121	
X		2.56	2.81		15			X	108	
X		2.94	3.12		8			X	160	
X		3.37	3.57		10			X	151	
	X	3.76	3.76	NORTHSTAR Dr	2	3	X		100	
	X	4.00	4.12		7			X	127	INCLUDING HIGHLANDS VIEW Rd
	X	4.28	4.37		7			X	116	
	X	4.85	5.00		9			X	95	
	X	5.24	5.34		7			X	130	
X		5.54	5.63		6			X	161	
X		5.81	5.96		10			X	115	
	X	6.05	6.20		11			X	98	
X		6.24	6.49		17			X	83	INCLUDING MARTIS PEAK Rd
	X	6.71	6.87		12			X	82	INCLUDING CARNELIAN WOOD Ave
				SUBTOTAL	153	9				
				TOTAL	162					

(N) = NOT A PAY ITEM. FOR INFORMATION PURPOSES ONLY.

PAVEMENT DELINEATION QUANTITIES
PDQ-3

STATE OF CALIFORNIA - DEPARTMENT OF TRANSPORTATION
Caltrans® DESIGN

FUNCTIONAL SUPERVISOR: KEN KEATON
CALCULATED-DESIGNED BY: DAC LE
CHECKED BY: JOHN KEBER
REVISED BY / DATE REVISED

LAST REVISION 00-00-00 | DATE PLOTTED => 01-JUL-2014 | TIME PLOTTED => 10:59

Dist	COUNTY	ROUTE	POST MILES TOTAL PROJECT	SHEET No.	TOTAL SHEETS
03	Pla	267	0.0/6.8	23	65

T. Krishnakumary 5-12-14
REGISTERED CIVIL ENGINEER DATE

5-12-14
PLANS APPROVAL DATE

REGISTERED PROFESSIONAL ENGINEER
KRISHNAKUMARY THAMIL SERAN
No. C79630
Exp. 9/30/14
CIVIL
STATE OF CALIFORNIA

THE STATE OF CALIFORNIA OR ITS OFFICERS OR AGENTS SHALL NOT BE RESPONSIBLE FOR THE ACCURACY OR COMPLETENESS OF SCANNED COPIES OF THIS PLAN SHEET.

ABBREVIATIONS:

BPA = BURIED POST ANCHOR

ROADWAY QUANTITIES

DIRECTION	APPROXIMATE PM		COLD PLANE AC PAVEMENT	HMA (TYPE A)	CLASS 2 AGGREGATE BASE (CY)	TACK COAT	SHOULDER BACKING	NOTES
NB/SB	FROM	TO	SQYD	TON	CY	TON	TON	
SB								
	0.00	0.07	1,384	148		2.7	8	QUANTITY INCLUDES DRIVEWAY AT PM 0.03
	0.07	0.27	3,328	446		2.2	24	QUANTITY INCLUDES INTERSECTION AT SCHAFFER MILL Rd
	0.27	0.70	4,915	664		2.3	46	
	1.20	2.41	12,938	1,496		6.2	36	QUANTITY INCLUDES DRIVEWAY AT PM 1.48 AND AT PM 2.40
	2.41	2.57	1,785	195		1.8	6	QUANTITY INCLUDES DRIVEWAY AT PM 2.54
	2.57	3.77	13,715	1,518		8.1	210	QUANTITY INCLUDES INTERSECTION AT NORTHSTAR Dr
	3.77	4.08	4,872	567		2.9	44	QUANTITY INCLUDES INTERSECTION AT HIGHLANDS VIEW Rd
	4.08	4.34	3,007	383		1.4	48	
	4.34	4.62	2,556	367		1.2	44	
	4.62	5.63	9,581	1,329		6.1	145	QUANTITY INCLUDES PULL OUT FROM PM 5.58 TO 5.63
	5.63	6.25	7,675	1,231	43	3.5	101	QUANTITY INCLUDES AB AND AC FOR RECONSTRUCT SHOULDER FROM PM 6.09 TO PM 6.20
	6.25	6.80	6,830	926		3.1	6	QUANTITY INCLUDES INTERSECTION AT CARNELIAN WOODS Ave
	SUBTOTAL (SB)		72,586	9,270	43	41.5	718	
NB	0.00	0.07	1,186	127		2.4	3	QUANTITY INCLUDES DRIVEWAY AT PM 0.03
	0.07	0.27	2,559	324		2.6	14	QUANTITY INCLUDES INTERSECTION AT TRUCKEE TAHOE AIRPORT Rd
	0.27	0.70	5,367	781		2.5	46	
	1.20	2.41	11,855	1,424		5.4	36	
	2.41	2.57	1,557	180		0.7	6	
	2.57	3.77	12,067	1,413		5.5	131	
	3.77	4.08	4,289	530		2.0	82	
	4.08	4.34	3,259	481		2.1	63	QUANTITY INCLUDES DRIVEWAY AT PM 4.33
	4.34	4.62	2,640	372		1.3	55	PULL OUT AT PM 4.61 TO 4.62
	4.62	5.63	9,623	1,391	30	4.4	127	QUANTITY INCLUDES AB AND AC FOR RECONSTRUCT SHOULDER FROM PM 4.81 TO PM 4.86
	5.63	6.25	7,354	948		5.1	41	QUANTITY INCLUDES INTERSECTION AT MARTIS PEAK Rd
	6.25	6.80	6,029	821		4.5	5	
	SUBTOTAL (NB)		67,785	8,792	30	38.5	609	
TOTAL FROM SAFETY EDGE QUANTITIES Q-2				23				
TOTAL			140,371	18,085	73	80.0	1,327	

CRACK TREATMENT

CRACK SEAL	
	LNMI
	13
TOTAL	13

SUMMARY OF QUANTITIES
Q-1

STATE OF CALIFORNIA - DEPARTMENT OF TRANSPORTATION
Caltrans® DESIGN

FUNCTIONAL SUPERVISOR: KEN KEATON
CALCULATED-DESIGNED BY: DAC LE
CHECKED BY: KRISHNA SERAN
REVISED BY
DATE REVISED

LAST REVISION 00-00-00
DATE PLOTTED => 01-JUL-2014
TIME PLOTTED => 10:59

Dist	COUNTY	ROUTE	POST MILES TOTAL PROJECT	SHEET No.	TOTAL SHEETS
03	Pla	267	0.0/6.8	24	65

T. Krishnakumary 5-12-14
REGISTERED CIVIL ENGINEER DATE

5-12-14
PLANS APPROVAL DATE

REGISTERED PROFESSIONAL ENGINEER
KRISHNAKUMARY THAMILSERAN
No. C79630
Exp. 9/30/14
CIVIL
STATE OF CALIFORNIA

THE STATE OF CALIFORNIA OR ITS OFFICERS OR AGENTS SHALL NOT BE RESPONSIBLE FOR THE ACCURACY OR COMPLETENESS OF SCANNED COPIES OF THIS PLAN SHEET.

MINOR HOT MIX ASPHALT

DIRECTION	APPROXIMATE PM		REMOVE AC DIKE	PLACE HMA DIKE				MINOR HMA	COMMENTS
				TYPE A	TYPE C	TYPE E	TYPE F		
NB/SB	FROM	TO	LF	LF	LF	LF	LF	TON	
SB	0.02	0.03	87			87		2.3	
SB	0.03	0.23	1056	25	150		881	13.4	DIKE TRANSITION FROM TYPE F TO TYPE C AND TYPE C TO TYPE A
NB	0.03	0.23	1056	25	150		881	13.4	DIKE TRANSITION FROM TYPE F TO TYPE C AND TYPE C TO TYPE A
SB	0.23	0.36	686	686				18.5	
NB	0.23	0.36	686	686				18.5	
SB	2.62	2.76	739	739				20.0	
SB	2.76	2.95	1003			1003		26.1	DIKE TRANSITION FROM TYPE A TO TYPE E AT PM 2.76
SB	2.97	3.30	1742	1742				47.0	
NB	3.17	3.35	950			950		24.7	
SB	3.33	3.63	1584	1584				42.8	
NB	3.59	3.75	845			845		22.0	
SB	3.73	3.74	53	53				1.4	
SB	3.77	3.78	53	53				1.4	
NB	3.78	3.83	264			264		6.9	
NB	3.84	4.16	1690			1690		43.9	
SB	3.90	4.01	581	581				15.7	
SB	4.08	4.10	106	106				2.9	
SB	4.11	4.14	158	158				4.3	
SB	4.15	4.40	1320	1320				35.6	
NB	4.16	4.27	581	581				15.7	
NB	4.27	4.36	475			475		12.4	
NB	4.37	4.90	2798	2798				75.6	
SB	4.40	4.50	528			528		13.7	
SB	4.69	4.77	422			422		11.0	
NB	4.90	4.92	106			106		2.7	
NB	4.92	5.02	507			507		13.2	
SB	4.94	5.01	412			412		10.7	
NB	5.02	5.17	792			792		20.6	
SB	5.13	5.23	560			560		14.6	
NB	5.17	5.87	3707			3707		96.4	
SB	5.34	5.38	206			206		5.4	
SB	5.43	5.47	211			211		5.5	
SB	5.48	5.56	428			428		11.1	
SB	5.56	5.62	333			333		8.6	
SB	5.67	5.75	449			449		11.7	
SB	5.75	5.87	623			623		16.2	
SB	5.88	5.92	243			243		6.3	
NB	5.88	5.95	354			354		9.2	
SB	5.92	6.01	444			444		11.5	
NB	5.97	6.07	491			491		12.8	
NB	6.07	6.01	961			961		11.2	
SB	6.17	6.33	845				845	25.0	TYPE F DIKE IS UNDER THE MBGR
NB	6.38	6.80	1587	1587				42.9	
SB	6.39	6.80	2181	2181				58.9	
		SUBTOTAL	34903	14905	300	17091	2607	883.7	
TOTAL FROM OVERSIDE DRAIN QUANTITIES Q-4								1.5	
		TOTAL	34903	14905	300	17091	2607	885.2	

SAFETY EDGE

LOCATION			HMA (TYPE A)
PM		DIR	
FROM	TO	NB/SB	TON
0.00	0.02	SB	0.1
0.36	2.62		8.0
3.63	3.73		0.4
4.01	4.08		0.2
4.50	4.69		0.7
4.77	4.94		0.6
5.01	5.13		0.4
5.23	5.34		0.4
5.38	5.43		0.2
5.62	5.67		0.2
6.01	6.17		0.6
6.33	6.39		0.2
0.00	0.03	NB	0.1
0.36	3.17		9.9
3.35	3.59		0.8
6.26	6.38		0.4
		SUB TOTAL	23.2

* FOR TOTAL HMA QUANTITY,
SEE ROADWAY QUANTITY SUMMARY TABLE ON Q-1.

SUMMARY OF QUANTITIES
Q-2

REVISED BY | DATE REVISED
KRISHNA SERAN | JORGE OLGUIN
CALCULATED-DESIGNED BY | CHECKED BY
FUNCTIONAL SUPERVISOR
KEN KEATON

STATE OF CALIFORNIA - DEPARTMENT OF TRANSPORTATION
Caltrans® DESIGN

LAST REVISION 00-00-00 | DATE PLOTTED => 01-JUL-2014 | TIME PLOTTED => 10:59

Dist	COUNTY	ROUTE	POST MILES TOTAL PROJECT	SHEET No.	TOTAL SHEETS
03	Pla	267	0.0/6.8	25	65

T. Krishnakumary 5-12-14
REGISTERED CIVIL ENGINEER DATE

5-12-14
PLANS APPROVAL DATE

REGISTERED PROFESSIONAL ENGINEER
KRISHNAKUMARY THAMIL SERAN
No. C79630
Exp. 9/30/14
CIVIL
STATE OF CALIFORNIA

THE STATE OF CALIFORNIA OR ITS OFFICERS OR AGENTS SHALL NOT BE RESPONSIBLE FOR THE ACCURACY OR COMPLETENESS OF SCANNED COPIES OF THIS PLAN SHEET.

GUARDRAIL

LOCATION PM FROM	LOCATION PM TO	LOCATION DIR NB/SB	(N) EXISTING LENGTH LF	REMOVE GUARDRAIL LF	RECONSTRUCT GUARDRAIL (WOOD POST) LF	ALTERNATIVE FLARED TERMINAL SYSTEM EA	ALTERNATIVE IN-LINE TERMINAL SYSTEM EA	END ANCHOR ASSEMBLY (TYPE CA) EA	(N) BURIED POST END ANCHOR EA	TREATED WOOD WASTE LB	LAYOUT	COMMENTS
5.95	6.33	SB	2,012.5	50.0	1962.5		1		1	31533	11I	RESET BPA TO THE STANDARD HEIGHT
6.25	6.33	NB	425.0	50.0	375.0	1		1		6689	11B	
SUBTOTAL			2,437.5	100.0	2,337.5	1	1	1	1			
TOTAL				100.0	2,337.5	1	1	1		38222		

(N) = NOT A PAY ITEM. FOR INFORMATION PURPOSES ONLY

CURB RAMP

LOCATION PM FROM	LOCATION PM TO	LOCATION DIR NB/SB		REMOVE ASPHALT CONCRETE SURFACING SQFT	MINOR CONCRETE (CURB RAMP) CY	DETECTABLE WARNING SURFACE SQFT	SNOW POLE SLEEVE EA	COMMUNICATION PULL BOX EA	COMMENTS
0.24	0.26	NB	CORNER 1		1.47	51.2	2		TRUCKEE TAHOE AIRPORT INTERSECTION
		NB	CORNER 2		2.13	55.8	2		
3.74	3.76	SB	CORNER 3	57.2	1.38	30.8	2	1	NORTHSTAR INTERSECTION
		SB	CORNER 4	54.6	1.13	28.6	2		
		NB	CORNER 5		0.93	22.4	2		
			TOTAL	111.8	7.04	188.8	10	1	

NOTE: ACTUAL LOCATION OF SNOW POLE SLEEVE IS DETERMINED BY RESIDENT ENGINEER.

DRAINAGE INLET

LOCATION PM	LOCATION DIR NB/SB	MISCELLANEOUS IRON AND STEEL LB	MINOR CONCRETE (MINOR STRUCTURE) CY	DESCRIPTION
3.76	SB	215		REPLACE GRATE TYPE 36RX AT NORTHSTAR Dr (INLET TYPE GCP)
6.70	SB	239	0.4	REPLACE GRATE TYPE 24-12X AT CARNELIAN WOODS Ave (INLET TYPE G3 - NORTHWEST CORNER)
6.70	SB	239	0.3	REPLACE GRATE TYPE 24-12X AT CARNELIAN WOODS Ave (INLET TYPE G1 - SOUTHWEST CORNER)
	TOTAL	693	0.7	

TEMPORARY DRAINAGE INLET PROTECTION

TEMPORARY DRAINAGE INLET PROTECTION	EA
	92
TOTAL	92

UNDERDRAIN

LOCATION PM	LOCATION PM	LOCATION DIR NB/SB	8" PERFORATED PLASTIC PIPE UNDERDRAIN LF	(N) TERMINAL RISER WITH STEEL CAP EA
4.81	4.86	NB	335	2
SUBTOTAL			335	2
TOTAL			335	

OBJECT MARKER

LOCATION PM	DIRECTION NB/SB	OBJECT MARKER (TYPE L-1) EA	DESCRIPTION
6.33	NB	1	AFES
TOTAL		1	

SUMMARY OF QUANTITIES

Q-3

REVISED BY	DATE REVISED
KRISHNA SERAN	DAC LE
CALCULATED-DESIGNED BY	CHECKED BY
FUNCTIONAL SUPERVISOR	KEN KEATON

STATE OF CALIFORNIA - DEPARTMENT OF TRANSPORTATION
Caltrans® DESIGN

LAST REVISION 00-00-00
DATE PLOTTED => 01-JUL-2014
TIME PLOTTED => 10:59

Dist	COUNTY	ROUTE	POST MILES TOTAL PROJECT	SHEET No.	TOTAL SHEETS
03	Pla	267	0.0/6.8	26	65

T. Krishnakumary 5-12-14
REGISTERED CIVIL ENGINEER DATE

5-12-14
PLANS APPROVAL DATE

REGISTERED PROFESSIONAL ENGINEER
KRISHNAKUMARY THAMILSERAN
No. C79630
Exp. 9/30/14
CIVIL
STATE OF CALIFORNIA

THE STATE OF CALIFORNIA OR ITS OFFICERS OR AGENTS SHALL NOT BE RESPONSIBLE FOR THE ACCURACY OR COMPLETENESS OF SCANNED COPIES OF THIS PLAN SHEET.

REPLACE ASPHALT CONCRETE SURFACING

LOCATION			(N) WIDTH	(N) LENGTH	REPLACE AC SURFACING	COMMENTS
PM		DIR	LF	LF	CY	
FROM	TO	NB/SB				
0.00	0.05	SB	16	264	39.1	TRAVELED WAY AND SHOULDER
0.05	0.12		16	370	54.8	TRAVELED WAY
0.12	0.18		16	317	47.0	TRAVELED WAY
0.18	0.25		30	370	102.8	TRAVELED WAY AND SHOULDER
0.27	0.38		12	581	64.6	TRAVELED WAY
1.47	1.50		06	158	8.8	TRAVELED WAY
1.96	2.05		12	475	52.8	TRAVELED WAY
3.77	3.80		12	158	17.6	TRAVELED WAY
4.60	4.65		4	264	9.8	SHOULDER
5.48	5.52		6	211	11.7	SHOULDER
5.58	5.62		6	211	11.7	SHOULDER
0.00	0.05	NB	24	264	58.7	TRAVELED WAY AND SHOULDER
0.05	0.12		16	370	54.8	TRAVELED WAY
0.12	0.18		18	317	52.8	TRAVELED WAY
0.18	0.25		16	370	54.8	TRAVELED WAY AND SHOULDER
0.25	0.28		6	158	8.8	TRAVELED WAY
0.28	0.37		12	475	52.8	TRAVELED WAY
0.38	0.51		6	686	38.1	TRAVELED WAY
1.57	1.62		6	264	14.7	TRAVELED WAY
1.98	2.05		12	370	41.1	TRAVELED WAY
4.65	4.74		6	475	26.4	SHOULDER
4.81	4.87		4	317	11.7	SHOULDER
5.69	5.80		6	158	8.8	SHOULDER
5.80	5.83		8	581	43.0	SHOULDER
TOTAL		887.2				

(N) = NOT A PAY ITEM. FOR INFORMATION PURPOSES ONLY.

TEMPORARY FENCE (TYPE ESA)

LOCATION	LOCATION	LENGTH
		LF
PM 0.74 TO 0.80	NB	317
PM 0.80 TO 0.85	SB	264
2.64 TO 2.66	NB	106
2.72 TO 2.77	NB	265
2.72 TO 2.77	SB	265
PM 4.32 TO 4.46	SB	739
TOTAL		1,956

OVERSIDE DRAIN (TYPE 1)

LOCATION		REMOVE OVERSIDE DRAIN	12" ENTRANCE TAPER	12" CORRUGATED STEEL PIPE DOWNDRAIN (.064" THICK)	12" ANCHOR ASSEMBLY	12" DOWNDRAIN SLIP JOINT	(N) 12" CORRUGATED STEEL PIPE T-SECTION	(N) 12" CORRUGATED STEEL PIPE 90 DEGREE ELBOW	ROCK SLOPE PROTECTION (NO. 2, METHOD B)	(N) ROCK SLOPE PROTECTION FABRIC (CLASS 8)	PLACE HMA (Misc AREA)	* MINOR HMA
PM	DIR											
	NB/SB	EA	EA	LF	EA	EA	EA	EA	CY	SQYD	SQYD	TON
0.14	NB		1	40	1	1	1				7.3	0.5
0.19	NB	1	1	30	1	1		1	0.9	5.6	7.3	0.5
3.80	NB		1	20		1	1				7.3	0.5
SUBTOTAL		1	3	90	2	3	2	1	0.9	5.6	21.9	1.5
TOTAL		1	3	90	2	3	2	1	0.9	5.6	21.9	

(N) = NOT A PAY ITEM. FOR INFORMATION PURPOSES ONLY.

* FOR TOTAL HMA QUANTITY, SEE ROADWAY QUANTITY SUMMARY TABLE ON Q-2.

SUMMARY OF QUANTITIES

Q-4

REVISED BY | DATE REVISED
DAC LE | LITTON WANG
CALCULATED-DESIGNED BY | CHECKED BY
FUNCTIONAL SUPERVISOR | KEN KEATON
STATE OF CALIFORNIA - DEPARTMENT OF TRANSPORTATION
Caltrans® DESIGN

LAST REVISION 00-00-00 | DATE PLOTTED => 01-JUL-2014 | TIME PLOTTED => 10:59

Dist	COUNTY	ROUTE	POST MILES TOTAL PROJECT	SHEET No.	TOTAL SHEETS
03	Pla	267	0.0/6.8	27	65

LICENSED LANDSCAPE ARCHITECT

5-12-14
PLANS APPROVAL DATE

LICENSED LANDSCAPE ARCHITECT
LESLEY PHILLIPS No. 5066
Signature
03-31-16
Renewal date
03-16-14
Date
STATE OF CALIFORNIA

THE STATE OF CALIFORNIA OR ITS OFFICERS OR AGENTS SHALL NOT BE RESPONSIBLE FOR THE ACCURACY OR COMPLETENESS OF SCANNED COPIES OF THIS PLAN SHEET.

Legend

EROSION CONTROL MULCH

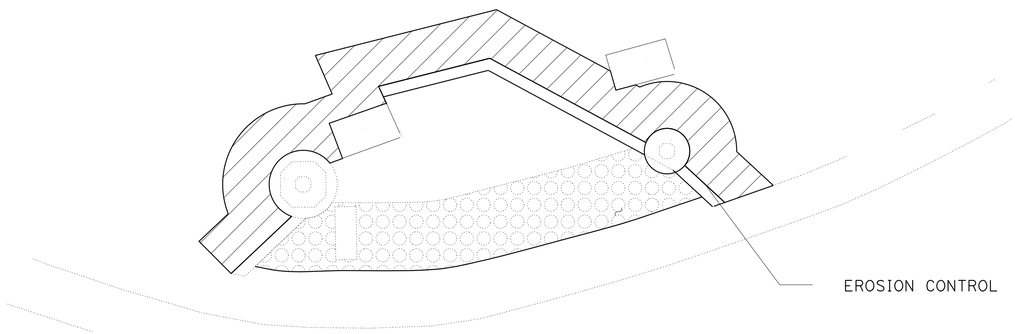

CORNER 1

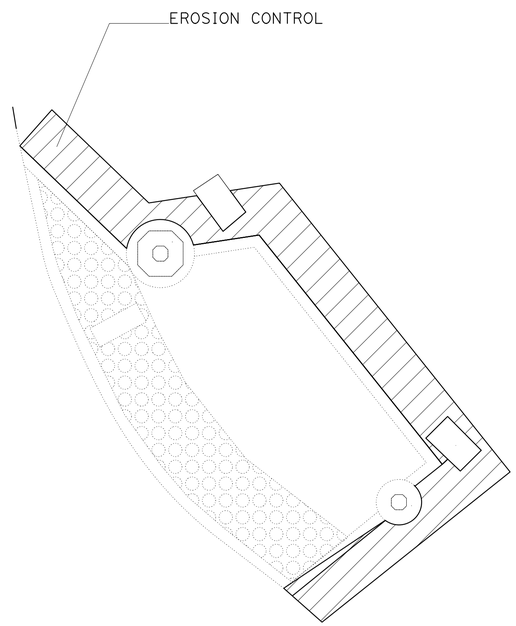

CORNER 2

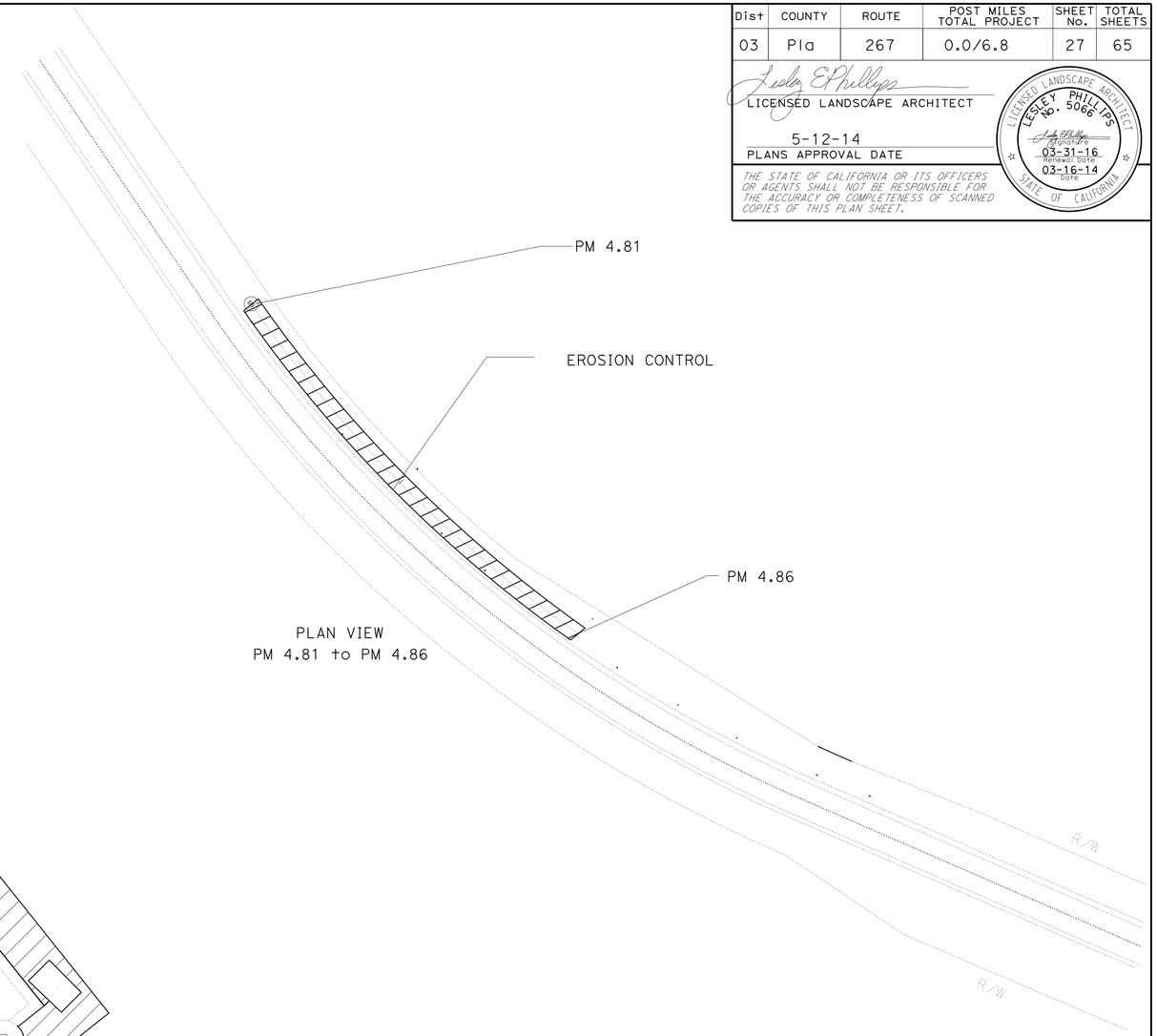

PLAN VIEW
PM 4.81 to PM 4.86

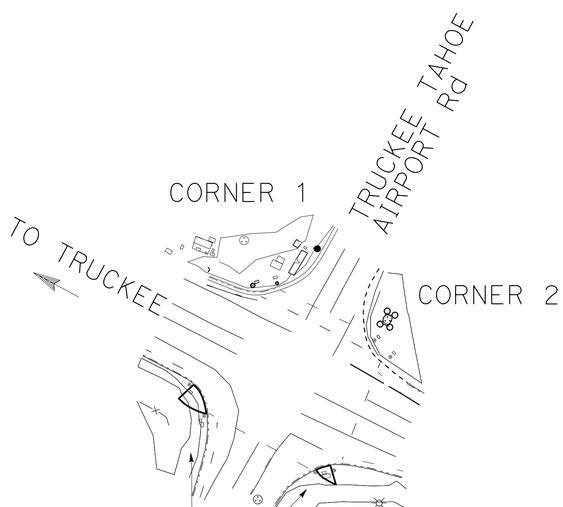

CURB RAMP DETAIL AT TRUCKEE TAHOE AIRPORT ROAD INTERSECTION (LOCATION 1 PM 0.25)

EROSION CONTROL PLANS

NO SCALE

EC-1

STATE OF CALIFORNIA - DEPARTMENT OF TRANSPORTATION
Caltrans LANDSCAPE ARCHITECT

SENIOR LANDSCAPE ARCHITECT: T. CHRIS JOHNSON

CALCULATED-DESIGNED BY: LESLEY PHILLIPS
CHECKED BY: T. CHRIS JOHNSON

REVISED BY
DATE REVISED

LAST REVISION 00-00-00
DATE PLOTTED => 01-JUL-2014
TIME PLOTTED => 10:59

Dist	COUNTY	ROUTE	POST MILES TOTAL PROJECT	SHEET No.	TOTAL SHEETS
03	Pla	267	0.0/6.8	28	65

LICENSED LANDSCAPE ARCHITECT

5-12-14
PLANS APPROVAL DATE

LICENSED LANDSCAPE ARCHITECT LESLEY PHILLIPS No. 5066 Signature 03-31-14 Renewal Date 3-16-14 Date STATE OF CALIFORNIA

THE STATE OF CALIFORNIA OR ITS OFFICERS OR AGENTS SHALL NOT BE RESPONSIBLE FOR THE ACCURACY OR COMPLETENESS OF SCANNED COPIES OF THIS PLAN SHEET.

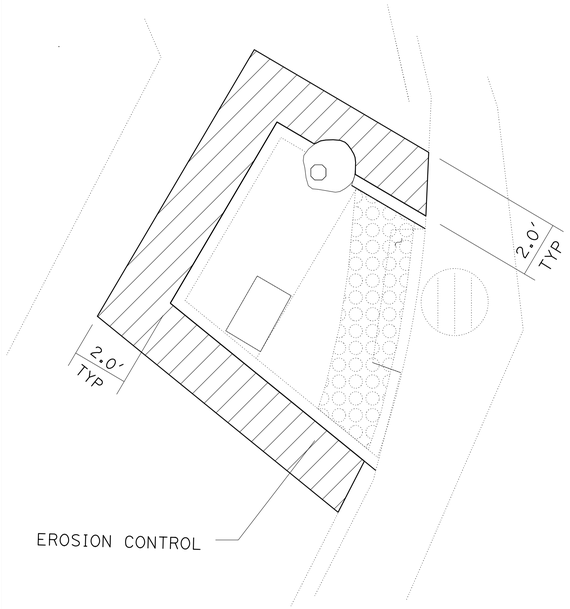

CORNER 3

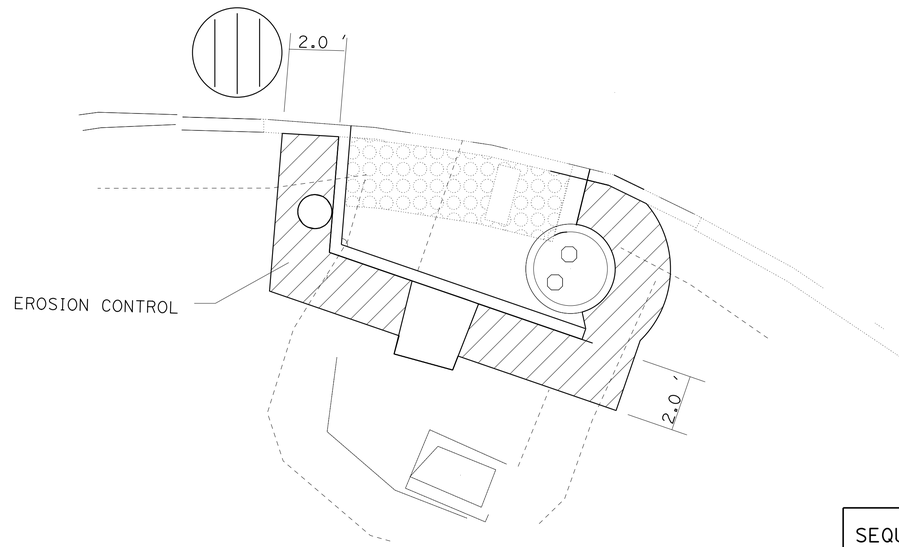

CORNER 4

EROSION CONTROL

SEQUENCE	ITEM	MATERIAL		APPLICATION RATE	DEPTH
		DESCRIPTION	TYPE		
STEP 1	MULCH	MULCH	SHREDDED BARK	270 CY/ACRE	2"

EROSION CONTROL

LOCATION				MULCH	COMMENTS
PM		DIR	CORNER		
FROM	TO	NB/SB		CY	
0.24	0.26	NB	1	0.4	TRUCKEE TAHOE AIRPORT RD
0.24	0.26	NB	2	0.5	TRUCKEE TAHOE AIRPORT RD
3.74	3.76	SB	3	0.4	NORTH STAR DRIVE
3.74	3.76	SB	4	0.6	NORTH STAR DRIVE
3.74	3.76	NB	5	0.3	NORTH STAR DRIVE
4.81	4.86	NB	——	8.0	UNDERDRAIN
			TOTAL	10.20	

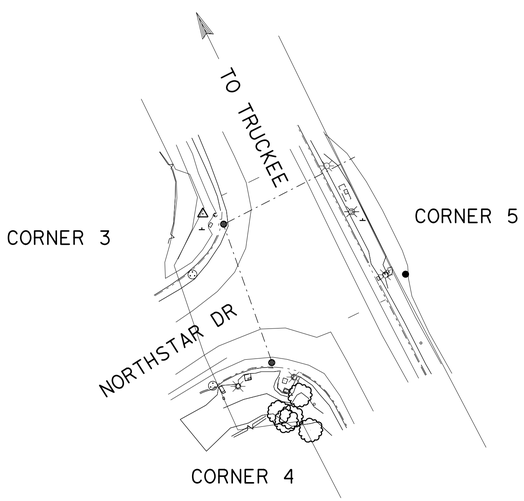

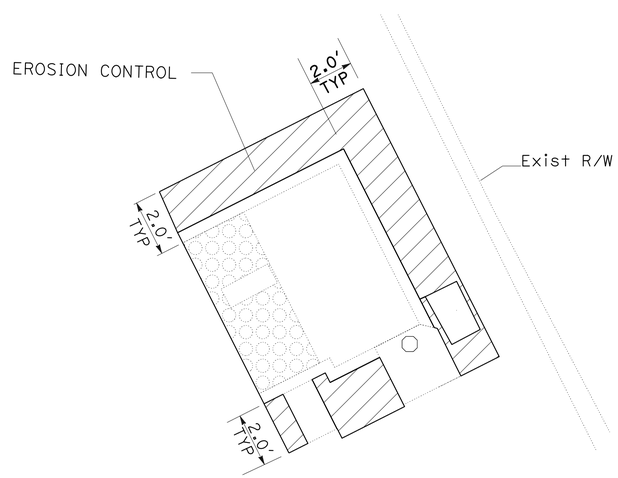

CORNER 5

CURB RAMP DETAIL AT NORTHSTAR DRIVE INTERSECTION (LOCATION 2 PM 3.76)

EROSION CONTROL PLANS

NO SCALE

EC-2

STATE OF CALIFORNIA - DEPARTMENT OF TRANSPORTATION
Caltrans LANDSCAPE ARCHITECTURE

SENIOR LANDSCAPE ARCHITECT: T.CHRIS JOHNSON
CALCULATED-DESIGNED BY: LESLEY PHILLIPS
CHECKED BY: T CHRIS JOHNSON
REVISED BY
DATE REVISED

LAST REVISION 00-00-00
DATE PLOTTED => 01-JUL-2014
TIME PLOTTED => 10:59

Dist	COUNTY	ROUTE	POST MILES TOTAL PROJECT	SHEET No.	TOTAL SHEETS
03	Pla	267	0.0/6.8	29	65

H. Golban 5-12-14
REGISTERED ELECTRICAL ENGINEER DATE

5-12-14
PLANS APPROVAL DATE

REGISTERED PROFESSIONAL ENGINEER HABIB GOLBAN No. E17928 Exp. 09-30-14 ELECTRICAL STATE OF CALIFORNIA

THE STATE OF CALIFORNIA OR ITS OFFICERS OR AGENTS SHALL NOT BE RESPONSIBLE FOR THE ACCURACY OR COMPLETENESS OF SCANNED COPIES OF THIS PLAN SHEET.

NOTE:

FOR ACCURATE RIGHT OF WAY DATA, CONTACT
RIGHT OF WAY ENGINEERING AT THE DISTRICT OFFICE.

LEGEND (THIS SHEET ONLY):

1. EXISTING TYPE III-AF SERVICE EQUIPMENT ENCLOSURE Ctid No. 03192670000240.
2. 2"C, 2#4, 2#6, 2#8, 8#10, 1#4G.
3. 2"C, 2#4, 8#10, 1#4G.
4. RS EXISTING PBA POST AND PBA, INSTALL 7' TYPE 1-B STANDARD AND Ø2APS, REUSE CONDUCTORS.
5. ADD 2-9CSC.
6. RS EXISTING PBA, INSTALL APS.
7. RC 3 MLC, ADD 3 MLC.
8. REFER TO SPECS FOR ENCAPSULATION KIT. PERFORM SPLICING PER MANUFACTURER'S RECOMMENDATIONS.

ABBREVIATION

MLC MAGNETO-INDUCTIVE LEAD-IN CABLE
SLI SENSOR LEAD-IN CABLE (CANOGA MODEL 30003
SPPC SIERRA PACIFIC POWER COMPANY
TC TELEPHONE CABLE

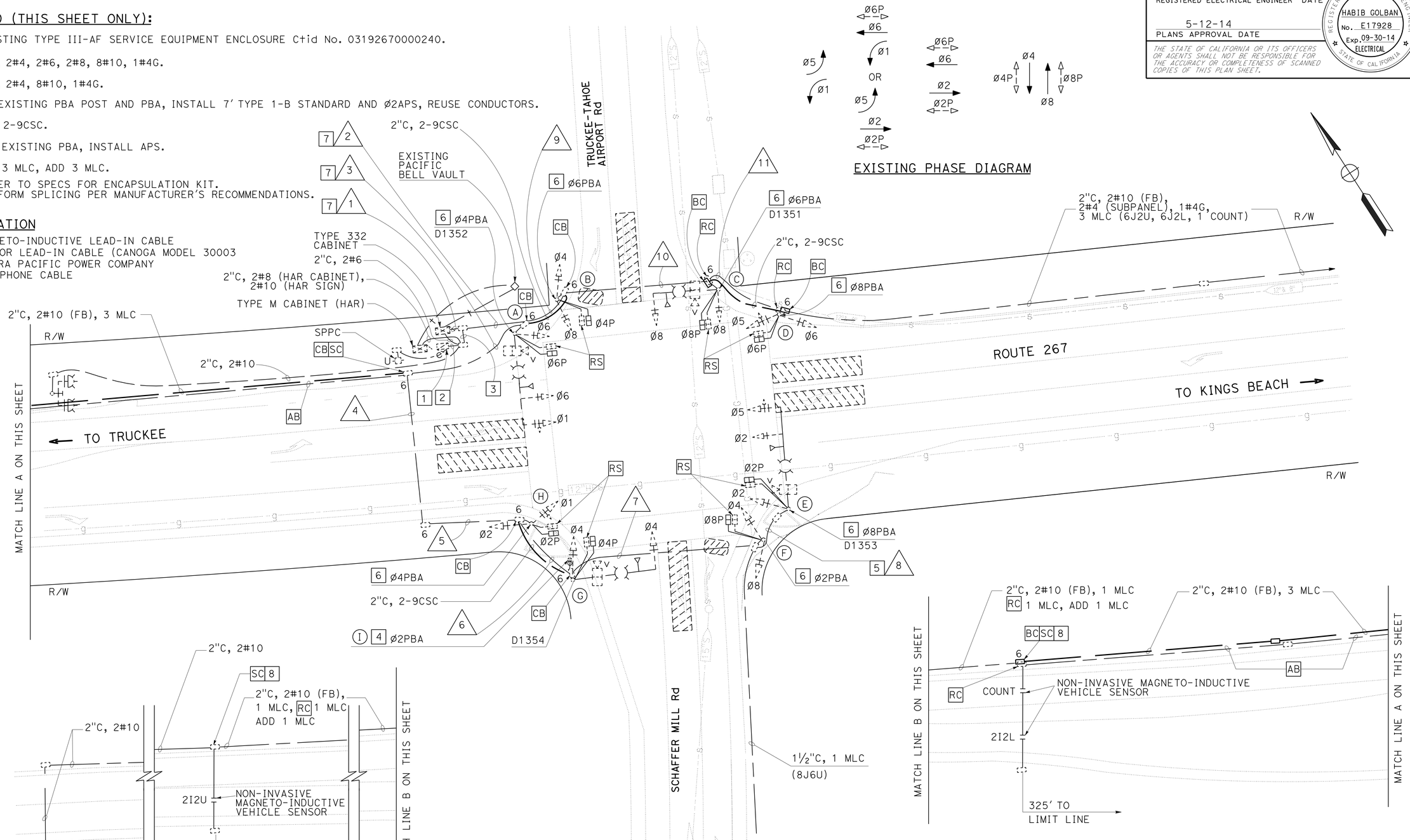

(PM 0.25)

MODIFY SIGNAL

NO SCALE

E-1

APPROVED FOR ELECTRICAL WORK ONLY

STATE OF CALIFORNIA - DEPARTMENT OF TRANSPORTATION
Caltrans ELECTRICAL DESIGN
FUNCTIONAL SUPERVISOR NELSON LEE
CALCULATED-DESIGNED BY HABIB GOLBAN
CHECKED BY JAMIE KOJAK
REVISED BY
DATE REVISED

LAST REVISION 05-14-14 DATE PLOTTED => 01-JUL-2014 TIME PLOTTED => 10:59

Dist	COUNTY	ROUTE	POST MILES TOTAL PROJECT	SHEET No.	TOTAL SHEETS
03	Pla	267	0.0/6.8	30	65

H. Golban 5-12-14
REGISTERED ELECTRICAL ENGINEER DATE

5-12-14
PLANS APPROVAL DATE

REGISTERED PROFESSIONAL ENGINEER HABIB GOLBAN No. E17928 Exp. 09-30-14 ELECTRICAL STATE OF CALIFORNIA

THE STATE OF CALIFORNIA OR ITS OFFICERS OR AGENTS SHALL NOT BE RESPONSIBLE FOR THE ACCURACY OR COMPLETENESS OF SCANNED COPIES OF THIS PLAN SHEET.

MODIFIED CONDUCTOR AND CONDUIT SCHEDULE

CABLE SCHEDULE				CONDUIT RUN										
CABLE TYPE	Std	PHASE		1	2	3	4	5	6	7	8	9	10	11
Veh-Ped 12CSC	Ⓐ	1,6,6P	4	1 1	1 1									
	Ⓑ	4,8,4P	6	1 1	1 1							1 1		
	Ⓒ	8,8P	6	1 1	1 1							1 1	1 1	
	Ⓓ	5,6,6P	8	1 1	1 1							1 1	1 1	1 1
APS-ACTUATOR 3CSC	Ⓔ	2,5,2P	8	1 1	1 1	1 1	1 1	1 1	1 1	1 1	1 1			
	Ⓕ	4,8,8P	2	1 1	1 1	1 1	1 1	1 1	1 1	1 1				
	Ⓖ	4,4P		1 1	1 1	1 1	1 1	1 1	1 1					
	Ⓗ	1,2,2P	4	1 1	1 1	1 1	1 1	1 1						
	Ⓘ		2											
	TOTAL			8 8	8 8	4 4	4 4	4 4	3 3	2 2	1 1	3 3	2 2	1 1
APS-Ped 9CSC	Ⓔ	2P									1			
	Ⓕ	8P									1			
	TOTAL										2			
#10	LUMINAIRES				4	2	2	2	2	2	2	2	2	
#4	SUBPANEL				2							2	2	2
#4	GROUND				1							1	1	1
#10	FLASHING BEACON				4	2						2	2	2
MLC	Ø2			2**	2**	2**								
	Ø6			2	2							2	2	2
	Ø8			1	1	1	1	1	1	1				
	COUNT DETECTORS			2*	2*	1*						1	1	1
TOTAL MLCs PER RUN				7	7	4	1	1	1	1		3	3	3
VIVDS CABLE				4	4	2	2	2	2	1	1			
EVUC				4	4	2	2	2	2	1	1			
CONDUIT SIZE				2-3"	2-4"	4"	3"	3"	3"	3"	3"	4"	3"	2"

* RC 1 MLC, ADD 1 MLC

** RC 2 MLC, ADD 2 MLC

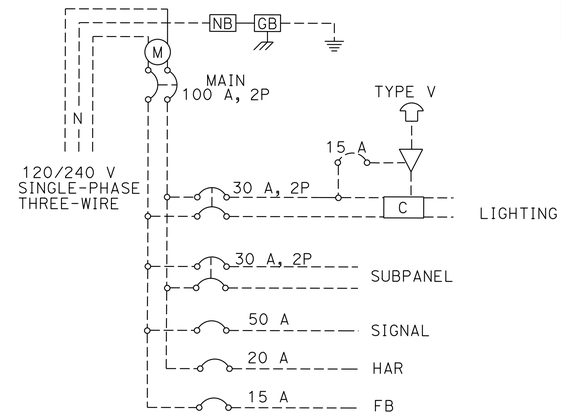

EXISTING SERVICE WIRING DIAGRAM

Ctid No. 03192670000240

WIRING DIAGRAM LEGEND:

- C — CONTACTOR (LIGHTING)
- AUTO TEST SWITCH
- M — METER SOCKET WITH MANUAL CIRCUIT CLOSING DEVICE
- PHOTOELECTRIC UNIT

MODIFIED POLE AND EQUIPMENT SCHEDULE

No.	STANDARD TYPE	SMA	LMA	Veh Sig Mtg Ø	Mtg	Ø	POLE	Ped SIGNAL Ø	Mtg	APS Ø	ARROW	LED LUMINAIRE	SPECIAL NOTES
Ⓐ	26-4-100	40′	15′	1 6	MAT MAS	6	SV-1-T	6	SP-1-T	4	←	200 W	RS PBA, INSTALL APS
Ⓑ	1-B					4 8	TV-2-T	4	SP-1-T	6	→		RS PBA, INSTALL APS
Ⓒ	19-3-100	25′	12′	8	MAS	8	SV-1-T	8	SP-1-T	6	←	200 W	RS PBA, INSTALL APS
Ⓓ	1-B					5 6	TV-2-T	6	SP-1-T	8	→		RS PBA, INSTALL APS
Ⓔ	26-4-100	45′	15′	2 5	MAT MAS	2	SV-1-T	2	SP-1-T	8	←	200 W	RS PBA, INSTALL APS
Ⓕ	1-B					4 8	TV-2-T	8	SP-1-T	2	→		RS PBA, INSTALL APS
Ⓖ	24-3-100	35′	12′	4	MAS	4	SV-1-T	4	SP-1-T			200 W	
Ⓗ	1-B					1 2	TV-2-T	2	SP-1-T	4	→		RS PBA, INSTALL APS
*** Ⓘ	TYPE 1-B STANDARD									2	←		INSTALL APS

*** NEW STANDARD, ALL OTHER STANDARDS ARE EXISTING

MODIFY SIGNAL

E-2

STATE OF CALIFORNIA - DEPARTMENT OF TRANSPORTATION
ELECTRICAL DESIGN

FUNCTIONAL SUPERVISOR: NELSON LEE
CALCULATED-DESIGNED BY: JAMIE KOJAK
CHECKED BY: HABIB GOLBAN
REVISED BY / DATE REVISED

LAST REVISION 05-14-14 | DATE PLOTTED => 01-JUL-2014 | TIME PLOTTED => 11:00

Dist	COUNTY	ROUTE	POST MILES TOTAL PROJECT	SHEET No.	TOTAL SHEETS
03	Pla	267	0.0/6.8	31	65

H. Golban 5-12-14
REGISTERED ELECTRICAL ENGINEER DATE

5-12-14
PLANS APPROVAL DATE

REGISTERED PROFESSIONAL ENGINEER HABIB GOLBAN No. E17928 Exp. 09-30-14 ELECTRICAL STATE OF CALIFORNIA

THE STATE OF CALIFORNIA OR ITS OFFICERS OR AGENTS SHALL NOT BE RESPONSIBLE FOR THE ACCURACY OR COMPLETENESS OF SCANNED COPIES OF THIS PLAN SHEET.

NOTE:

FOR ACCURATE RIGHT OF WAY DATA, CONTACT
RIGHT OF WAY ENGINEERING AT THE DISTRICT OFFICE.

LEGEND (THIS SHEET ONLY):

1. EXISTING TYPE III-AF (NO-METERED SECTION, SUBPANEL) WITH 5 kVA STEP DOWN TRANSFORMER, 240/120 V, FOR WIRING DIAGRAM SEE DETAIL A THIS SHEET.
2. EXISTING TYPE 334 CABINET (TMS).
3. EXISTING TYPE 334 CABINET (CMS).
4. EXISTING 2"C, 2#8 (120 V, CMS CABINET), 2#8 (TDC), 2#8 (120 V, TMS), 2#8 (240 V, CMS).
5. EXISTING 1½"C, 2#8 (TDC).
6. EXISTING 2"C, 4 DLC.
7. EXISTING 1½"C, 2#8 (120 V, CMS CABINET), 2#8 (240 V, CMS).
8. EXISTING 1½"C, 2#8 (240 V, CMS).
9. EXISTING 2"C, 1 CMS HARNESS #4, 1 CMS HARNESS #5.
10. EXISTING 1½"C, 2#4, 1#4G (240 V SUBPANEL).
11. EXISTING 2"C, 1 TC, 1 CAT5E CABLE.
12. EXISTING 2-3"C, 2#8 (120 V, TMS), AND 4 DLC.
13. EXISTING 2-3"C, 1 CMS HARNESS #4, 1 CMS HARNESS #5, 2#8 (120 V, CMS CABINET).
14. EXISTING AT&T VAULT.
15. TO SERVICE ENCLOSURE CABINET Ctid No. 03192670000240.
FOR SERVICE WIRING DIAGRAM SEE SHEET E-2.

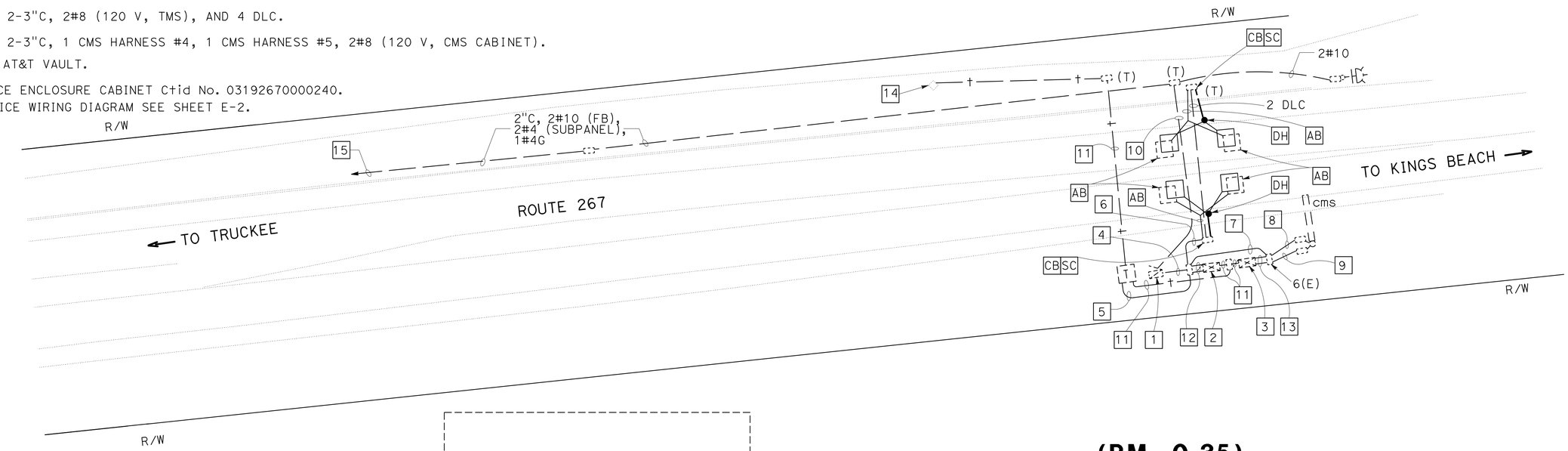

(PM 0.35)

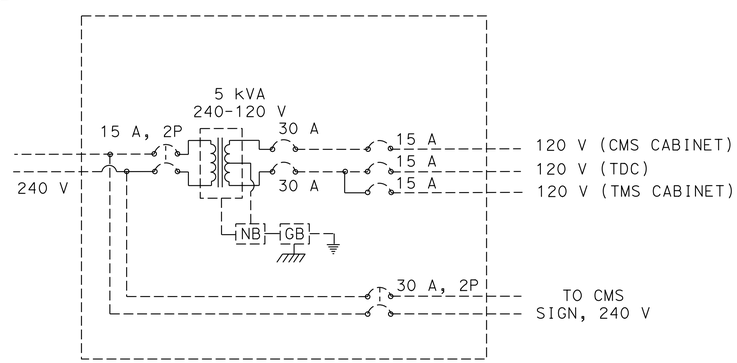

EXISTING SUBPANEL

DETAIL A
NO SCALE

MODIFY TRAFFIC MONITORING STATION

NO SCALE

E-3

APPROVED FOR ELECTRICAL WORK ONLY

STATE OF CALIFORNIA - DEPARTMENT OF TRANSPORTATION
Caltrans® **ELECTRICAL DESIGN**

FUNCTIONAL SUPERVISOR: NELSON LEE
CALCULATED-DESIGNED BY: JAMIE KOJAK
CHECKED BY: HABIB GOLBAN
REVISED BY
DATE REVISED

LAST REVISION 05-14-14 | DATE PLOTTED => 01-JUL-2014 | TIME PLOTTED => 11:00

Dist	COUNTY	ROUTE	POST MILES TOTAL PROJECT	SHEET No.	TOTAL SHEETS
03	Pla	267	0.0/6.8	32	65

H. Golban 5-12-14
REGISTERED ELECTRICAL ENGINEER DATE

5-12-14
PLANS APPROVAL DATE

REGISTERED PROFESSIONAL ENGINEER
HABIB GOLBAN
No. E17928
Exp. 09-30-14
ELECTRICAL
STATE OF CALIFORNIA

THE STATE OF CALIFORNIA OR ITS OFFICERS OR AGENTS SHALL NOT BE RESPONSIBLE FOR THE ACCURACY OR COMPLETENESS OF SCANNED COPIES OF THIS PLAN SHEET.

NOTE:

FOR ACCURATE RIGHT OF WAY DATA, CONTACT
RIGHT OF WAY ENGINEERING AT THE DISTRICT OFFICE.

LEGEND (THIS SHEET ONLY):

1. EXISTING TYPE 332 CONTROLLER CABINET.
2. EXISTING TYPE III-AF SERVICE EQUIPMENT ENCLOSURE, Ctid No. 03192670003831, 120/240 V. SEE SHEET E-6 FOR SERVICE WIRING DIAGRAM.
3. EXISTING TYPE 334 CONTROLLER CABINET.
4. AB EXISTING TYPE A DETECTOR LOOPS, INSTALL TYPE A DETECTOR LOOPS 6'X12'.

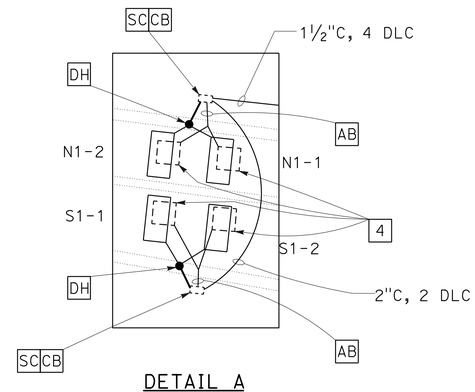

DETAIL A

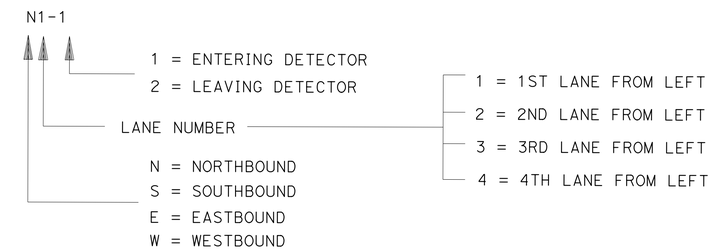

HIGHWAY DETECTOR IDENTIFICATION

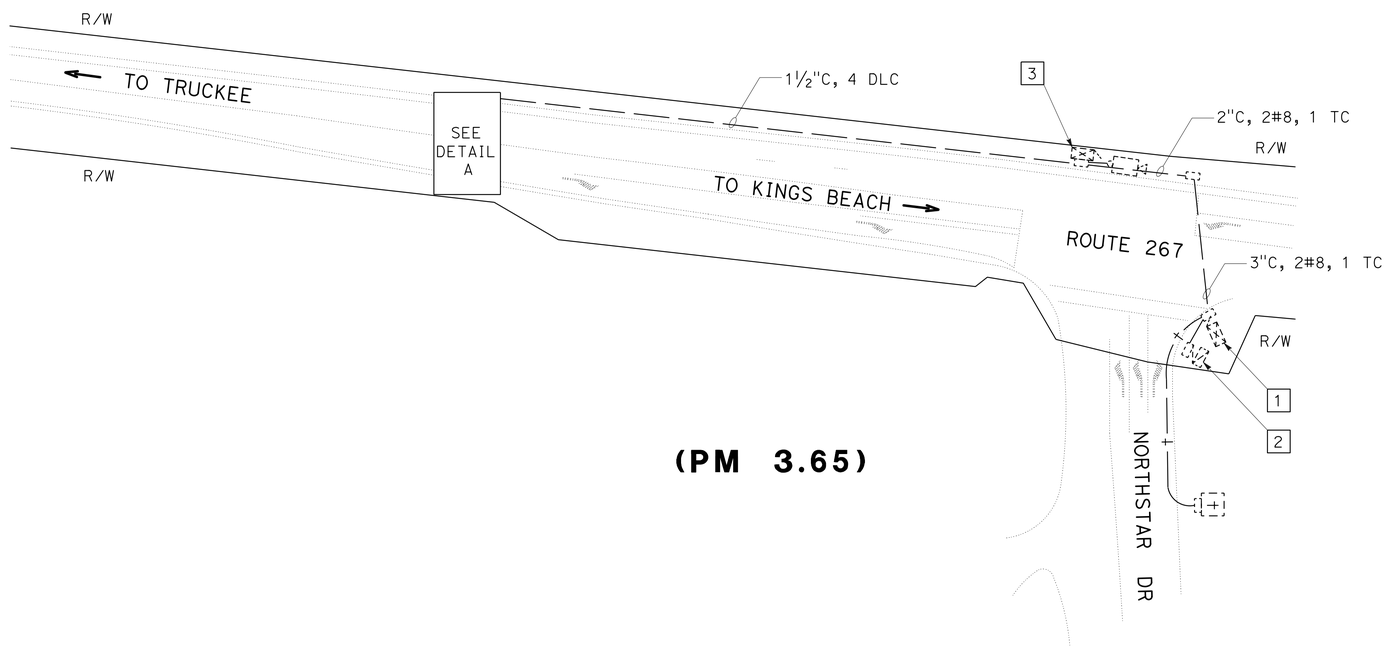

(PM 3.65)

MODIFY TRAFFIC MONITORING STATION

NO SCALE

E-4

APPROVED FOR ELECTRICAL WORK ONLY

STATE OF CALIFORNIA - DEPARTMENT OF TRANSPORTATION
Caltrans® ELECTRICAL DESIGN

FUNCTIONAL SUPERVISOR: NELSON LEE
CALCULATED-DESIGNED BY: JAMIE KOJAK
CHECKED BY: HABIB GOLBAN
REVISED BY
DATE REVISED

LAST REVISION 05-14-14
DATE PLOTTED => 01-JUL-2014
TIME PLOTTED => 11:00

Dist	COUNTY	ROUTE	POST MILES TOTAL PROJECT	SHEET No.	TOTAL SHEETS
03	Pla	267	0.0/6.8	33	65

H. Golban 5-12-14
REGISTERED ELECTRICAL ENGINEER DATE

5-12-14
PLANS APPROVAL DATE

REGISTERED PROFESSIONAL ENGINEER
HABIB GOLBAN
No. E17928
Exp. 09-30-14
ELECTRICAL
STATE OF CALIFORNIA

THE STATE OF CALIFORNIA OR ITS OFFICERS OR AGENTS SHALL NOT BE RESPONSIBLE FOR THE ACCURACY OR COMPLETENESS OF SCANNED COPIES OF THIS PLAN SHEET.

NOTE:

FOR ACCURATE RIGHT OF WAY DATA, CONTACT
RIGHT OF WAY ENGINEERING AT THE DISTRICT OFFICE.

LEGEND (THIS SHEET ONLY):

1. RS EXISTING PBA, INSTALL Ø2APS.
2. EXISTING TYPE 332 CONTROLLER CABINET.
3. EXISTING TYPE III-AF SERVICE EQUIPMENT ENCLOSURE, Ctid No. 03192670003831.
4. RS EXISTING Ø3PBA AND Ø2PBA, INSTALL Ø3APS.
5. RC EXISTING 1-3CSC (Ø2PBA), INSTALL 1-3CSC (Ø2APS).
6. 2"C, 1-3CSC (Ø2APS), 1-9CSC (Ø2APS-Ped SIGNAL HEAD).
7. INSTALL APS ON 7' TYPE 1-B STANDARD, SEE SHEET C-3 FOR STANDARD LOCATION.

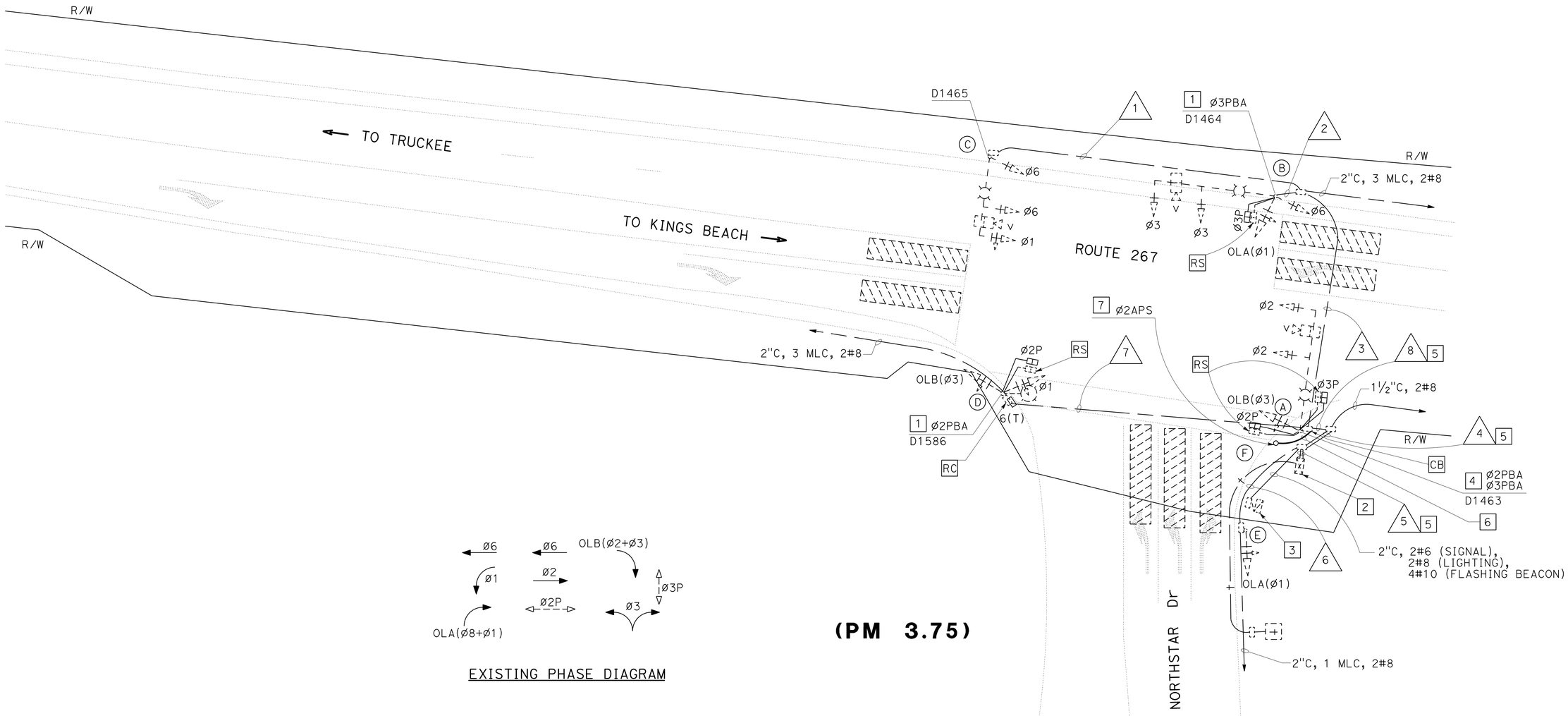

EXISTING PHASE DIAGRAM

MODIFY SIGNAL

NO SCALE

E-5

APPROVED FOR ELECTRICAL WORK ONLY

STATE OF CALIFORNIA - DEPARTMENT OF TRANSPORTATION
Caltrans
ELECTRICAL DESIGN

FUNCTIONAL SUPERVISOR: NELSON LEE
CALCULATED-DESIGNED BY: JAMIE KOJAK
CHECKED BY: HABIB GOLBAN
REVISED BY
DATE REVISED

LAST REVISION 05-14-14 | DATE PLOTTED => 01-JUL-2014 | TIME PLOTTED => 11:00

Dist	COUNTY	ROUTE	POST MILES TOTAL PROJECT	SHEET No.	TOTAL SHEETS
03	Pla	267	0.0/6.8	34	65

H. Golban 5-12-14
REGISTERED ELECTRICAL ENGINEER DATE

5-12-14
PLANS APPROVAL DATE

REGISTERED PROFESSIONAL ENGINEER HABIB GOLBAN No. E17928 Exp. 09-30-14 ELECTRICAL STATE OF CALIFORNIA

THE STATE OF CALIFORNIA OR ITS OFFICERS OR AGENTS SHALL NOT BE RESPONSIBLE FOR THE ACCURACY OR COMPLETENESS OF SCANNED COPIES OF THIS PLAN SHEET.

MODIFIED CONDUCTOR AND CONDUIT SCHEDULE

CABLE SCHEDULE			CONDUIT RUN							
CABLE TYPE	Std	PHASE	1	2	3	4	5	6	7	8
Veh-Ped 12CSC / APS 3CSC	A	2,OLB,2P,3P / 3				1 / 1	1 / 1			1 / 1
	B	3, 6, OLA, SP / 3		1 / 1	1 / 1	1 / 1	1 / 1			1 / 1
	C	1,3,6	1 /	1 /	1 /	1 /	1 /			1 /
	D	1, OLB, 2P / 2				1 / 1	1 / 1		1 / 1	1 / 1
	E	OLA				/	1 / 1		/	/
	F	/ 2				/ 1*	/ 1*			/ 1*
		TOTAL	1 /	2 / 1	2 / 1	5 / 4	5 / 4	1 /	1 / 1	4 / 4
#8		LUMINAIRES	2	2	2	2				2
#6		CONTROLLER POWER					2			
#8		FLASHING BEACON			2	4			2	4
MLC		Ø2				2	2		2	2
		Ø6			2	2	2			2
		Ø8				2	2	2		
		COUNT DETECTORS			2	2	2		2	2
TOTAL MLCs PER RUN					4	8	8	2	4	6
VIVDS CABLE			1	1	2	3	3			3
CONDUIT SIZE			2"	3"	3"	2-3"	2-3"	1½"	2"	3"

* RC 1-3CSC, ADD 1-3CSC

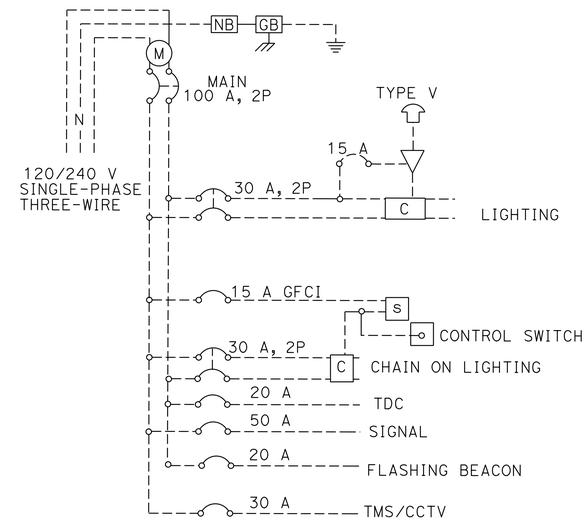

EXISTING SERVICE WIRING DIAGRAM

Ctid No. 03192670003831

WIRING DIAGRAM LEGEND:

- C — CONTACTOR (LIGHTING)
- AUTO TEST SWITCH
- M — METER SOCKET WITH MANUAL CIRCUIT CLOSING DEVICE
- PHOTOELECTRIC UNIT
- S — SWITCH

MODIFIED POLE AND EQUIPMENT SCHEDULE

No.	STANDARD TYPE	SMA	LMA	Veh Sig Mtg Ø	Mtg	Ø	POLE	Ped SIGNAL Ø	Mtg	APS Ø	ARROW	LED LUMINAIRE	SPECIAL NOTES
A	26-3-100	40'	12'	2 2	MAS MAS	OLB (Ø3)	SV-1-T	2 3	SP-2-T	3	←	200 W	RS PBA, INSTALL APS
B	24-3-100	35'	12'	3 3	MAT MAT	OLA(Ø1) 6	SV-2-TA	3	SP-1-T	3	→	200 W	RS PBA, INSTALL APS
C	28-5-100	35'	12'	1 6	MAT MAS	6 3	SV-2-TA					200 W	
D	15					1 OLB (Ø3)	SV-2-TA	2	SP-1-T	2	→	200 W	RS PBA, INSTALL APS
E	1-B					OLA (Ø1)	TV-1-T						
** F	TYPE 1-B STANDARD									2	→		INSTALL APS

** NEW STANDARD, ALL OTHER STANDARDS ARE EXISTING

MODIFY SIGNAL

E-6

APPROVED FOR ELECTRICAL WORK ONLY

STATE OF CALIFORNIA - DEPARTMENT OF TRANSPORTATION
ELECTRICAL DESIGN
FUNCTIONAL SUPERVISOR: NELSON LEE
CALCULATED-DESIGNED BY: JAMIE KOJAK
CHECKED BY: HABIB GOLBAN
REVISED BY / DATE REVISED

LAST REVISION 05-14-14
DATE PLOTTED => 01-JUL-2014
TIME PLOTTED => 11:00

Dist	COUNTY	ROUTE	POST MILES TOTAL PROJECT	SHEET No.	TOTAL SHEETS
03	Pla	267	0.0/6.8	35	65

H. Golban 5-12-14
REGISTERED ELECTRICAL ENGINEER DATE

5-12-14
PLANS APPROVAL DATE

REGISTERED PROFESSIONAL ENGINEER
HABIB GOLBAN
No. E17928
Exp. 09-30-14
ELECTRICAL
STATE OF CALIFORNIA

THE STATE OF CALIFORNIA OR ITS OFFICERS OR AGENTS SHALL NOT BE RESPONSIBLE FOR THE ACCURACY OR COMPLETENESS OF SCANNED COPIES OF THIS PLAN SHEET.

NOTE:

FOR ACCURATE RIGHT OF WAY DATA, CONTACT
RIGHT OF WAY ENGINEERING AT THE DISTRICT OFFICE.

LEGEND (THIS SHEET ONLY):

1 RR EXISTING ELECTRICAL EQUIPMENT, RC TYPE M CABINET.

2 INSTALL TYPE M CABINET ON EXISTING FOUNDATION, AND REUSE EQUIPMENT.

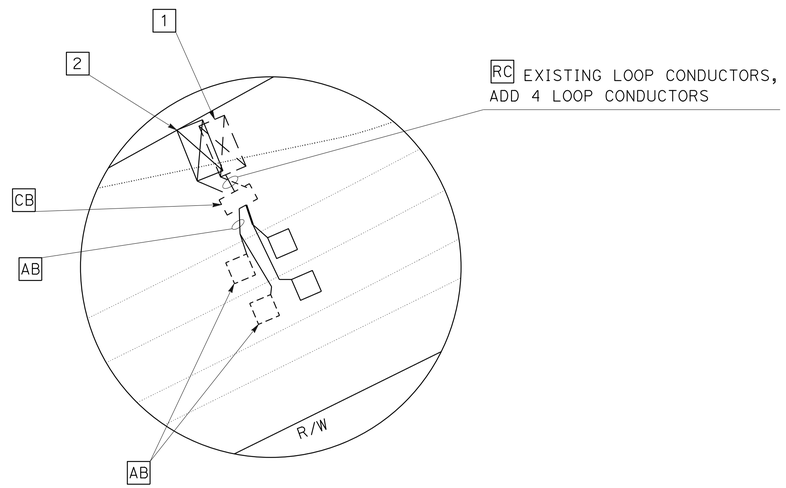

DETAIL A

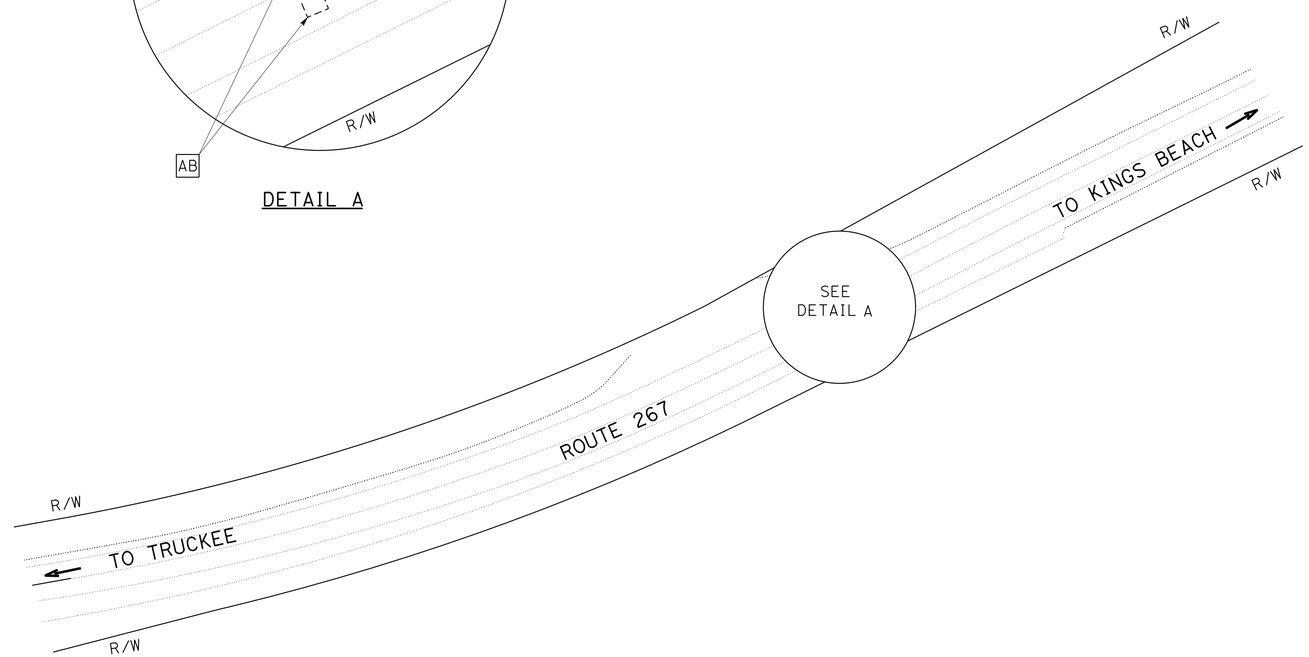

(PM 4.34)

MODIFY TRAFFIC MONITORING STATION (COUNT)

APPROVED FOR ELECTRICAL WORK ONLY

NO SCALE

E-7

STATE OF CALIFORNIA - DEPARTMENT OF TRANSPORTATION
Caltrans® **ELECTRICAL DESIGN**

FUNCTIONAL SUPERVISOR: NELSON LEE
CALCULATED-DESIGNED BY: JAMIE KOJAK
CHECKED BY: HABIB GOLBAN
REVISED BY
DATE REVISED

LAST REVISION 05-14-14
DATE PLOTTED => 01-JUL-2014
TIME PLOTTED => 11:00

Dist	COUNTY	ROUTE	POST MILES TOTAL PROJECT	SHEET No.	TOTAL SHEETS
03	Pla	267	0.0/6.8	36	65

H. Golban 5-12-14
REGISTERED ELECTRICAL ENGINEER DATE

5-12-14
PLANS APPROVAL DATE

REGISTERED PROFESSIONAL ENGINEER
HABIB GOLBAN
No. E17928
Exp. 09-30-14
ELECTRICAL
STATE OF CALIFORNIA

THE STATE OF CALIFORNIA OR ITS OFFICERS OR AGENTS SHALL NOT BE RESPONSIBLE FOR THE ACCURACY OR COMPLETENESS OF SCANNED COPIES OF THIS PLAN SHEET.

NOTE:

FOR ACCURATE RIGHT OF WAY DATA, CONTACT
RIGHT OF WAY ENGINEERING AT THE DISTRICT OFFICE.

LEGEND (THIS SHEET ONLY):

1. EXISTING TYPE 334C CONTROLLER CABINET.
2. EXISTING TYPE III-AF SERVICE EQUIPMENT ENCLOSURE, Ctid No. 03192670006700, 120/240 V.
3. EXISTING 2"C, 2#8 (120 V, CCTV/TMS), 2#8 (120 V, TDC), 2#8 (120 V, RWIS).
4. EXISTING 1½"C, 2#8 (120 V, CCTV/TMS).
5. RC 4 DLC.

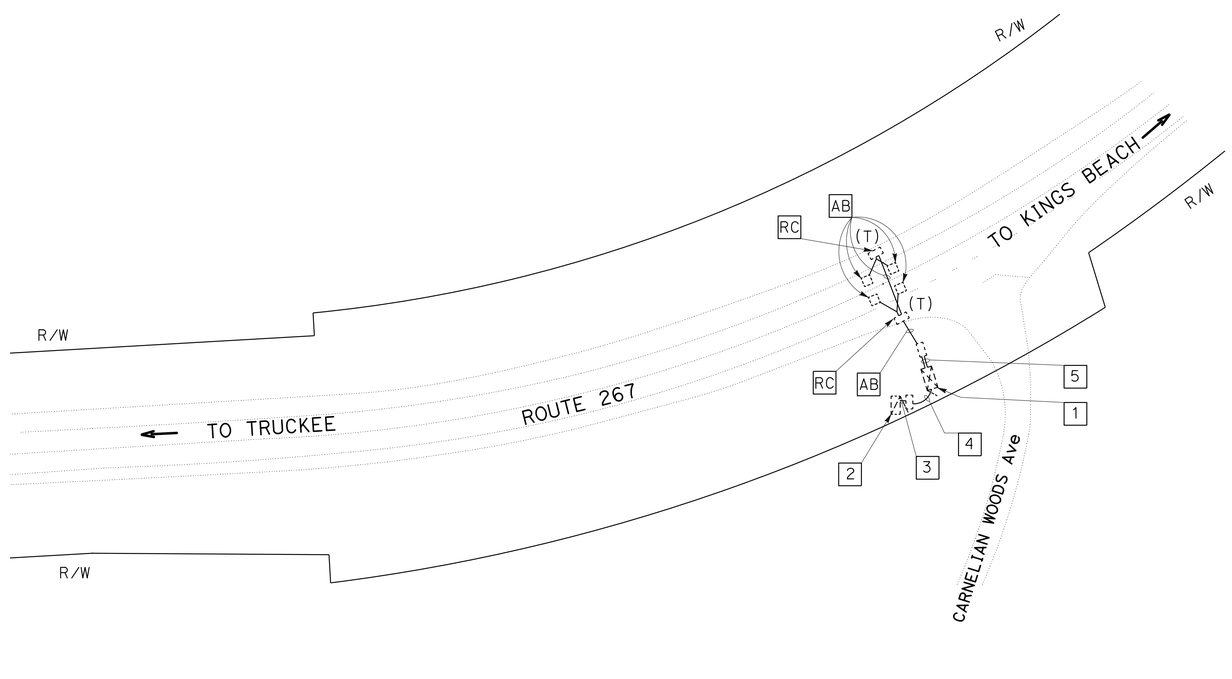

(PM 6.76)

MODIFY TRAFFIC MONITORING STATION

APPROVED FOR ELECTRICAL WORK ONLY

NO SCALE

E-8

STATE OF CALIFORNIA - DEPARTMENT OF TRANSPORTATION
Caltrans® **ELECTRICAL DESIGN**

FUNCTIONAL SUPERVISOR: NELSON LEE
CALCULATED-DESIGNED BY: JAMIE KOJAK
CHECKED BY: HABIB GOLBAN
REVISED BY
DATE REVISED

LAST REVISION 05-14-14
DATE PLOTTED => 01-JUL-2014
TIME PLOTTED => 11:00

Dist	COUNTY	ROUTE	POST MILES TOTAL PROJECT	SHEET No.	TOTAL SHEETS
03	Pla	267	0.0/6.8	37	65

H. Golban 5-12-14
REGISTERED ELECTRICAL ENGINEER DATE

5-12-14
PLANS APPROVAL DATE

REGISTERED PROFESSIONAL ENGINEER
HABIB GOLBAN
No. E17928
Exp. 09-30-14
ELECTRICAL
STATE OF CALIFORNIA

THE STATE OF CALIFORNIA OR ITS OFFICERS OR AGENTS SHALL NOT BE RESPONSIBLE FOR THE ACCURACY OR COMPLETENESS OF SCANNED COPIES OF THIS PLAN SHEET.

NOTE:

FOR ACCURATE RIGHT OF WAY DATA, CONTACT
RIGHT OF WAY ENGINEERING AT THE DISTRICT OFFICE.

LEGEND (THIS SHEET ONLY):

1. EXISTING SPPC POWER SERVICING UTILITY POLE.
2. EXISTING 2"C, 3#2.
3. EXISTING 1½"C, 1 TELEPHONE CABLE.
4. RC EXISTING SURFACE SENSOR.
5. EXISTING 1½"C, 2#8 (120 V, TDC).
6. EXISTING 1½"C, 2 TELEPHONE CABLES.
7. EXISTING 1½"C, 1 TELEPHONE CABLE, 1 CAMERA MULTICONDUCTOR CABLE, 1 MVDS CABLE.
8. EXISTING 1½"C, 2#8 (120 V, RWIS).
9. EXISTING 1½"C, 3 SLI, RC 3 SLI, INSTALL 1 SLI.
10. EXISTING TYPE 334C CONTROLLER CABINET.
11. EXISTING 2"C, 1 TELEPHONE CABLE, 1 CAMERA MULTICONDUCTOR CABLE, 1 MVDS CABLE.
12. EXISTING 1½"C, 2#8 (120 V, CCTV/TMS).
13. EXISTING 2"C, 2#8 (120 V, CCTV/TMS), 2#8 (120 V, TDC), 2#8 (120 V, RWIS).
14. EXISTING TYPE III-AF SERVICE EQUIPMENT ENCLOSURE, Ctid No. 03192670006700, 120/240 V.
15. INSTALL SURFACE SENSOR PER MANUFACTURER'S RECOMMENDATIONS.
16. EXISTING RWIS TOWER, RS RWIS EQUIPMENT INSIDE TOWER MOUNTED NEMA CABINET, RELATIVE HUMIDITY / AIR TEMPERATURE SENSOR, PRESENT WEATHER / VISIBILITY SENSOR, AND WIND SPEED AND DIRECTION SENSOR.
    INSTALL PRECIPITATION GUAGE, PAVEMENT SURFACE SENSOR, PRESENT WEATHER / VISIBILITY SENSOR, RELATIVE HUMIDITY / AIR TEMPERATURE SENSOR, AND WIND SPEED AND DIRECTION SENSOR.
    INSTALL DEPARTMENT-FURNISHED RWIS MATERIALS.

SYMBOLS:

- EXISTING SURFACE SENSOR
- EXISTING SUBSURFACE TEMPERATURE PROBE
- SURFACE SENSOR

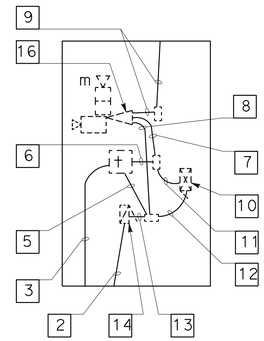

DETAIL A

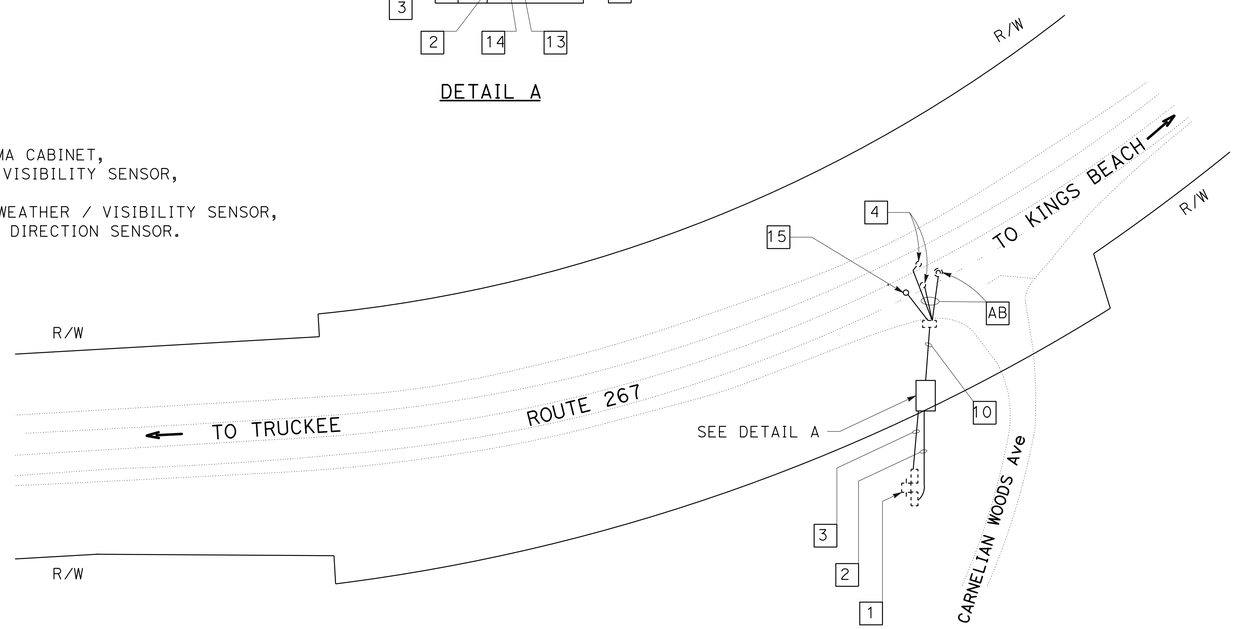

(PM 6.76)

ROADSIDE WEATHER INFORMATION SYSTEM

APPROVED FOR ELECTRICAL WORK ONLY

NO SCALE

E-9

STATE OF CALIFORNIA - DEPARTMENT OF TRANSPORTATION
Caltrans
ELECTRICAL DESIGN

FUNCTIONAL SUPERVISOR: NELSON LEE
CALCULATED-DESIGNED BY: JAMIE KOJAK
CHECKED BY: HABIB GOLBAN
REVISED BY
DATE REVISED

LAST REVISION 05-14-14
DATE PLOTTED => 01-JUL-2014
TIME PLOTTED => 11:00

Dist	COUNTY	ROUTE	POST MILES TOTAL PROJECT	SHEET No.	TOTAL SHEETS
03	Pla	267	0.0/6.8	38	65

H. Golban 5-12-14
REGISTERED ELECTRICAL ENGINEER DATE

5-12-14
PLANS APPROVAL DATE

REGISTERED PROFESSIONAL ENGINEER
HABIB GOLBAN
No. E17928
Exp. 09-30-14
ELECTRICAL
STATE OF CALIFORNIA

THE STATE OF CALIFORNIA OR ITS OFFICERS OR AGENTS SHALL NOT BE RESPONSIBLE FOR THE ACCURACY OR COMPLETENESS OF SCANNED COPIES OF THIS PLAN SHEET.

NOTE:
ITEMS SHOWN IN THE TABLES ARE NOT A SEPARATE PAY ITEM, FOR INFORMATION ONLY.

MODIFY SIGNAL

SHEET No.	APS	PEDESTRIAN SIGNAL HEAD	TYPE 1-B STANDARD 7'	PB No. 6	PB No. 6 (T)	2" CONDUIT TYPE 3	CONDUCTOR #10	MLC CANOGA MODEL 30003	✳ ENCAPSULATION KIT	3CSC	9CSC
	EA	EA	EA	EA	EA	LF	LF	LF	EA	LF	LF
E-1	8	8	1	3		530	650	1500	2		240
E-5	4	4	1		1	15				40	55

✳ 3M SCOTCHCAST 3832 BURIED SERVICE WIRE ENCAPSULATION KIT.

ROADSIDE WEATHER INFORMATION SYSTEM

SHEET No.	MODIFYING RWIS
	EA
E-9	1

MODIFY TRAFFIC MONITORING STATION (COUNT)

SHEET No.	TYPE M CABINET	TYPE A LOOP
	EA	EA
E-7	1	2

MODIFY TRAFFIC MONITORING STATION

SHEET No.	TYPE A LOOP	TYPE A LOOP 6'X12'	RC TRAFFIC RATED PB	HAND HOLE
	EA	EA	EA	EA
E-3	4			2
E-4		4		2
E-8			2	

ELECTRICAL QUANTITIES

E-10

STATE OF CALIFORNIA - DEPARTMENT OF TRANSPORTATION
Caltrans® ELECTRICAL DESIGN
FUNCTIONAL SUPERVISOR: NELSON LEE
CALCULATED-DESIGNED BY: JAMIE KOJAK
CHECKED BY: HABIB GOLBAN
REVISED BY
DATE REVISED

LAST REVISION 05-14-14
DATE PLOTTED => 01-JUL-2014
TIME PLOTTED => 11:00

M

Maint	MAINTENANCE
Max	MAXIMUM
MB	METAL BEAM
MBB	METAL BEAM BARRIER
MBGR	METAL BEAM GUARD RAILING
Med	MEDIAN
MGS	MIDWEST GUARDRAIL SYSTEM
MH	MANHOLE
Min	MINIMUM
Misc	MISCELLANEOUS
Misc I & S	MISCELLANEOUS IRON AND STEEL
Mkr	MARKER
Mod	MODIFIED,
	MODIFY
Mon	MONUMENT
MP	METAL PLATE
MPGR	METAL PLATE GUARD RAILING
MR	MOVEMENT RATING
MSE	MECHANICALLY STABILIZED EMBANKMENT
Mt	MOUNTAIN, MOUNT
Mtl	MATERIAL
MVP	MAINTENANCE VEHICLE PULLOUT

N

N	NORTH
NB	NORTHBOUND
No.	NUMBER (MUST HAVE PERIOD)
Nos.	NUMBERS (MUST HAVE PERIOD)
NPS	NOMINAL PIPE SIZE
NS	NEAR SIDE
NSP	NEW STANDARD PLAN
NTS	NOT TO SCALE

O

Oblr	OBLITERATE
OC	OVERCROSSING
OD	OUTSIDE DIAMETER
OF	OUTSIDE FACE
OG	ORIGINAL GROUND
OGAC	OPEN GRADED ASPHALT CONCRETE
OGFC	OPEN GRADED FRICTION COURSE
OH	OVERHEAD
OHWM	ORDINARY HIGH WATER MARK
O-O	OUT TO OUT
Opp	OPPOSITE
OSD	OVERSIDE DRAIN

P

p	PAGE
PAP	PERFORATED ALUMINUM PIPE
PB	PULL BOX
PC	POINT OF CURVATURE,
	PRECAST
PCC	POINT OF COMPOUND CURVE,
	PORTLAND CEMENT CONCRETE
PCMS	PORTABLE CHANGEABLE MESSAGE SIGN
PCP	PERFORATED CONCRETE PIPE,
	PRESTRESSED CONCRETE PIPE
PCVC	POINT OF COMPOUND VERTICAL CURVE
PEC	PERMIT TO ENTER AND CONSTRUCT
Ped	PEDESTRIAN
Ped OC	PEDESTRIAN OVERCROSSING
Ped UC	PEDESTRIAN UNDERCROSSING
Perm Mtl	PERMEABLE MATERIAL

P continued

PG	PROFILE GRADE
PI	POINT OF INTERSECTION
PJP	PARTIAL JOINT PENETRATION
Pkwy	PARKWAY
ℙ,PL	PLATE
P/L	PROPERTY LINE
PM	POST MILE,
	TIME FROM NOON TO MIDNIGHT
PN	PAVING NOTCH
POC	POINT OF HORIZONTAL CURVE
POT	POINT OF TANGENT
POVC	POINT OF VERTICAL CURVE
PP	PIPE PILE,
	PLASTIC PIPE,
	POWER POLE
PPL	PREFORMED PERMEABLE LINER
PPP	PERFORATED PLASTIC PIPE
PRC	POINT OF REVERSE CURVE
PRF	PAVEMENT REINFORCING FABRIC
PRVC	POINT OF REVERSE VERTICAL CURVE
PS&E	PLANS, SPECIFICATIONS AND ESTIMATES
PS, P/S	PRESTRESSED
PSP	PERFORATED STEEL PIPE
PT	POINT OF TANGENCY
PVC	POLYVINYL CHLORIDE
Pvmt	PAVEMENT

Q

Qty	QUANTITY

R

R	RADIUS
R & D	REMOVE AND DISPOSE
R & S	REMOVE AND SALVAGE
R/C	RATE OF CHANGE
RCA	REINFORCED CONCRETE ARCH
RCB	REINFORCED CONCRETE BOX
RCP	REINFORCED CONCRETE PIPE
RCPA	REINFORCED CONCRETE PIPE ARCH
Rd	ROAD
Reinf	REINFORCED,
	REINFORCEMENT,
	REINFORCING
Rel	RELOCATE
Repl	REPLACEMENT
Ret	RETAINING
Rev	REVISED, REVISION
Rdwy	ROADWAY
RHMA	RUBBERIZED HOT MIX ASPHALT
Riv	RIVER
RM	ROAD-MIXED
RP	RADIUS POINT,
	REFERENCE POINT
RR	RAILROAD
RSP	ROCK SLOPE PROTECTION,
	REVISED STANDARD PLAN
Rt	RIGHT
Rte	ROUTE
RW	REDWOOD,
	RETAINING WALL
R/W	RIGHT OF WAY
Rwy	RAILWAY

S

S	SOUTH,
	SUPPLEMENT
SAE	STRUCTURE APPROACH EMBANKMENT
Salv	SALVAGE
SAPP	STRUCTURAL ALUMINUM PLATE PIPE
SB	SOUTHBOUND
SC	SAND CUSHION
SCSP	SLOTTED CORRUGATED STEEL PIPE
SD	STORM DRAIN
Sec	SECOND,
	SECTION
Sep	SEPARATION
SG	SUBGRADE
Shld	SHOULDER
Sht	SHEET
Sim	SIMILAR
℄	STATION LINE
SM	SELECTED MATERIAL
Spec	SPECIAL,
	SPECIFICATIONS
SPP	SLOTTED PLASTIC PIPE
SS	SLOPE STAKE
SSBM	STRAP AND SADDLE BRACKET METHOD
SSD	STRUCTURAL SECTION DRAIN
SSPA	STRUCTURAL STEEL PLATE ARCH
SSPP	STRUCTURAL STEEL PLATE PIPE
SSPPA	STRUCTURAL STEEL PLATE PIPE ARCH
SSRP	STEEL SPIRAL RIB PIPE
St	STREET
Sta	STATION
STBB	SINGLE THRIE BEAM BARRIER
Std	STANDARD
Str	STRUCTURE
Surf	SURFACING
SW	SIDEWALK,
	SOUND WALL
Swr	SEWER
Sym	SYMMETRICAL
S4S	SURFACE 4 SIDES

T

T	SEMI-TANGENT
Tan	TANGENT
TBB	THRIE BEAM BARRIER
Tbr	TIMBER
TC	TOP OF CURB
TCB	TRAFFIC CONTROL BOX
TCE	TEMPORARY CONSTRUCTION EASEMENT
Tel	TELEPHONE
Temp	TEMPORARY
TG	TOP OF GRADE
Tot	TOTAL
TP	TELEPHONE POLE
TPB	TREATED PERMEABLE BASE
TPM	TREATED PERMEABLE MATERIAL
Trans	TRANSITION

T continued

TS	TRANSVERSE,
	TRAFFIC SIGNAL,
	TUBULAR STEEL
Typ	TYPICAL

U

UC	UNDERCROSSING
UD	UNDERDRAIN
UG	UNDERGROUND
UON	UNLESS OTHERWISE NOTED
UP	UNDERPASS

V

V	VALVE,
	DESIGN SPEED
Var	VARIABLE,
	VARIES
VC	VERTICAL CURVE
VCP	VITRIFIED CLAY PIPE
Vert	VERTICAL
Via	VIADUCT
Vol	VOLUME

W

W	WEST,
	WIDTH
WB	WESTBOUND
WH	WEEP HOLE
WM	WIRE MESH
WS	WATER SURFACE
WSP	WELDED STEEL PIPE
Wt	WEIGHT
WV	WATER VALVE
WW	WINGWALL
WWLOL	WINGWALL LAYOUT LINE

X

X Sec	CROSS SECTION
Xing	CROSSING

Y

Yr	YEAR
Yrs	YEARS

Dist	COUNTY	ROUTE	POST MILES TOTAL PROJECT	SHEET No.	TOTAL SHEETS
03	Pla	267	0.0/6.8	39	65

Grace M. Tsushima
REGISTERED CIVIL ENGINEER

July 19, 2013
PLANS APPROVAL DATE

REGISTERED PROFESSIONAL ENGINEER Grace M. Tsushima No. C49814 Exp. 9-30-14 CIVIL STATE OF CALIFORNIA

THE STATE OF CALIFORNIA OR ITS OFFICERS OR AGENTS SHALL NOT BE RESPONSIBLE FOR THE ACCURACY OR COMPLETENESS OF SCANNED COPIES OF THIS PLAN SHEET.

TO ACCOMPANY PLANS DATED 5-12-14

UNIT OF MEASUREMENT SYMBOLS:

Some of the symbols used in the project plan quantity tables and in the Bid Item List are:

TABLE A

SYMBOL USED	DEFINITIONS
ACRE	ACRE
CF	CUBIC FOOT
CY	CUBIC YARD
EA	EACH
GAL	GALLON
LB	POUND
LF	LINEAR FOOT
SQFT	SQUARE FOOT
SQYD	SQUARE YARD
STA	100 FEET
TAB	TABLET
TON	2,000 POUNDS

Some of the symbols used in the plans other than in the project plan quantity tables are:

TABLE B

SYMBOL USED	DEFINITIONS
ksi	KIPS PER SQUARE INCH
ksf	KIPS PER SQUARE FOOT
psi	POUNDS PER SQUARE INCH
psf	POUNDS PER SQUARE FOOT
lb/ft^3, pcf	POUNDS PER CUBIC FOOT
tsf	TONS PER SQUARE FOOT
mph, MPH *	MILES PER HOUR
ø	NOMINAL DIAMETER
oz	OUNCE
lb	POUND
kip	1,000 POUNDS
cal	CALORIE
ft	FOOT OR FEET
gal	GALLON

* For use on a sign panel only

STATE OF CALIFORNIA
DEPARTMENT OF TRANSPORTATION

ABBREVIATIONS (SHEET 2 OF 2)

NO SCALE

RSP A10B DATED JULY 19, 2013 SUPERSEDES STANDARD PLAN A10B DATED MAY 20, 2011 - PAGE 2 OF THE STANDARD PLANS BOOK DATED 2010.

REVISED STANDARD PLAN RSP A10B

2010 REVISED STANDARD PLAN RSP A10B

6-7-13

Dist	COUNTY	ROUTE	POST MILES TOTAL PROJECT	SHEET No.	TOTAL SHEETS
03	Pla	267	0.0/6.8	40	65

REGISTERED CIVIL ENGINEER

April 20, 2012
PLANS APPROVAL DATE

REGISTERED PROFESSIONAL ENGINEER
Roberta L. McLaughlin
No. C40375
Exp. 3-31-13
CIVIL
STATE OF CALIFORNIA

THE STATE OF CALIFORNIA OR ITS OFFICERS OR AGENTS SHALL NOT BE RESPONSIBLE FOR THE ACCURACY OR COMPLETENESS OF SCANNED COPIES OF THIS PLAN SHEET.

TO ACCOMPANY PLANS DATED 5-12-14

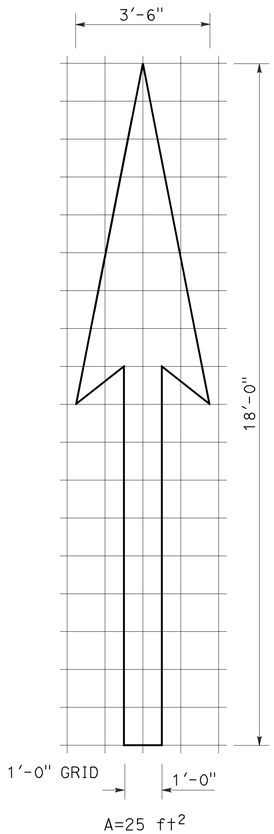

A=25 ft^2

TYPE I 18'-0" ARROW

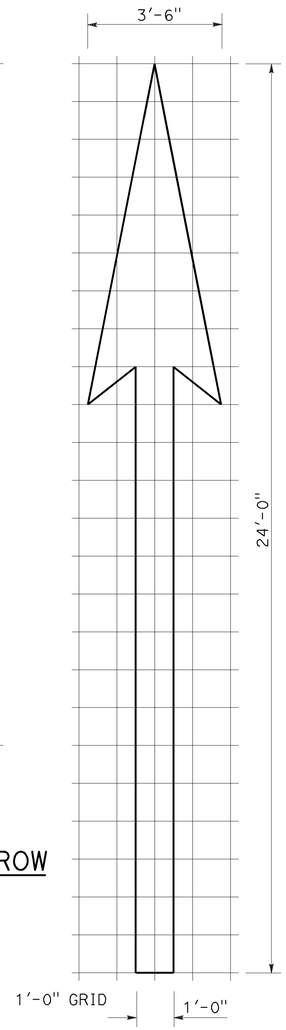

A=31 ft^2

TYPE I 24'-0" ARROW

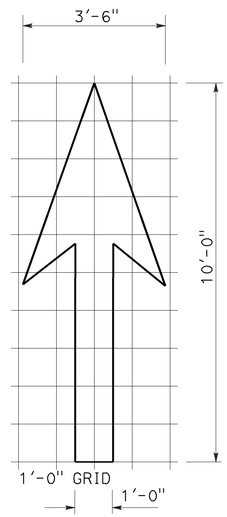

A=14 ft^2

TYPE I 10'-0" ARROW

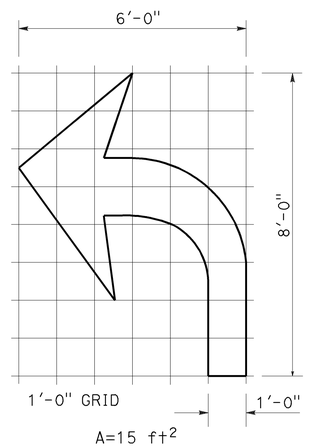

A=15 ft^2

TYPE IV (L) ARROW

(For Type IV (R) arrow, use mirror image)

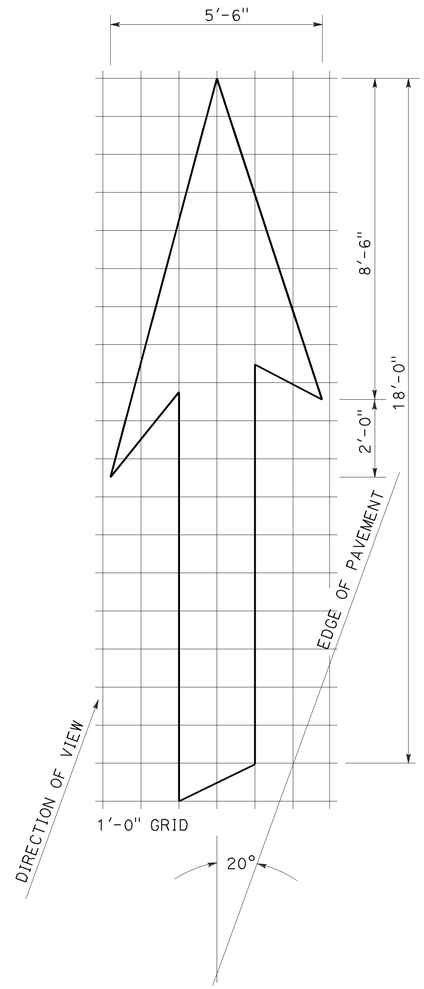

A=42 ft^2

TYPE VI ARROW

Right lane drop arrow
(For left lane, use mirror image)

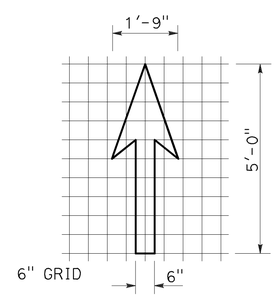

A=3.5 ft^2

BIKE LANE ARROW

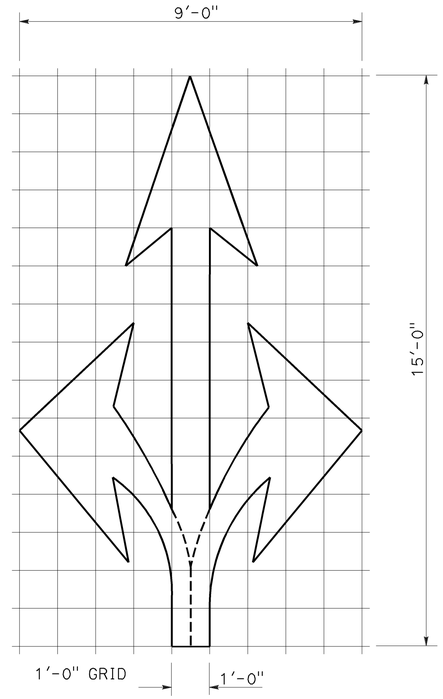

A=36 ft^2

TYPE VIII ARROW

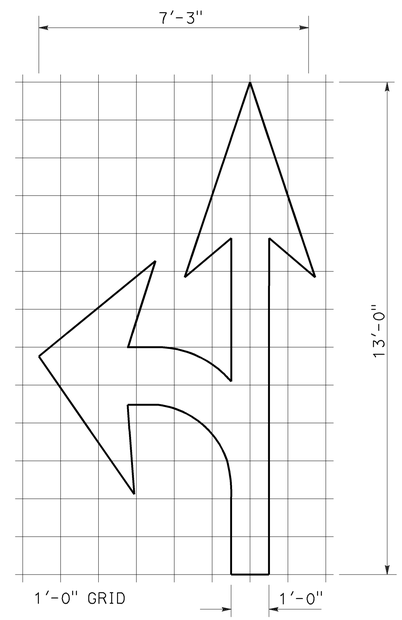

A=27 ft^2

TYPE VII (L) ARROW

(For Type VII (R) arrow, use mirror image)

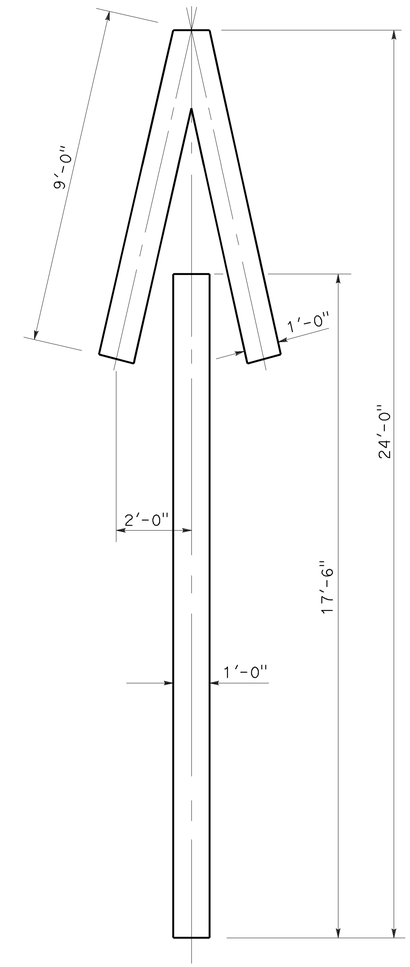

A=33 ft^2

TYPE V ARROW

NOTE:
Minor variations in dimensions may be accepted by the Engineer.

STATE OF CALIFORNIA
DEPARTMENT OF TRANSPORTATION

PAVEMENT MARKINGS ARROWS

NO SCALE

RSP A24A DATED APRIL 20, 2012 SUPERSEDES STANDARD PLAN A24A DATED MAY 20, 2011 - PAGE 13 OF THE STANDARD PLANS BOOK DATED 2010.

REVISED STANDARD PLAN RSP A24A

2010 REVISED STANDARD PLAN RSP A24A

3-14-12

Dist	COUNTY	ROUTE	POST MILES TOTAL PROJECT	SHEET No.	TOTAL SHEETS
03	Pla	267	0.0/6.8	41	65

REGISTERED CIVIL ENGINEER

July 20, 2012
PLANS APPROVAL DATE

REGISTERED PROFESSIONAL ENGINEER
Roberta L. McLaughlin
No. C40375
Exp. 3-31-13
CIVIL
STATE OF CALIFORNIA

THE STATE OF CALIFORNIA OR ITS OFFICERS OR AGENTS SHALL NOT BE RESPONSIBLE FOR THE ACCURACY OR COMPLETENESS OF SCANNED COPIES OF THIS PLAN SHEET.

TO ACCOMPANY PLANS DATED 5-12-14

2010 REVISED STANDARD PLAN RSP A24E

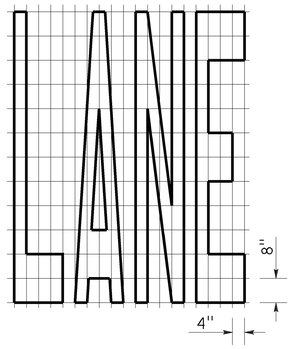

A=24 ft^2

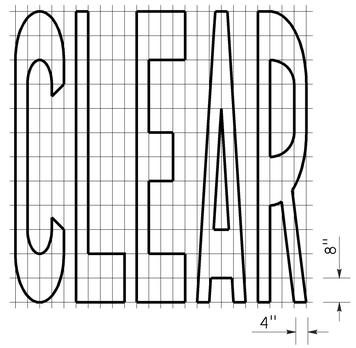

A=27 ft^2

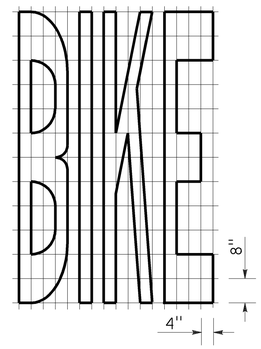

A=21 ft^2

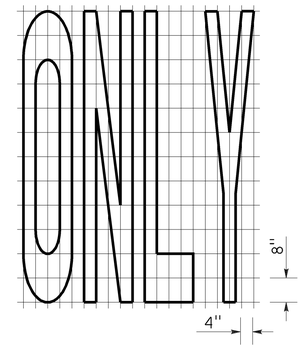

A=22 ft^2

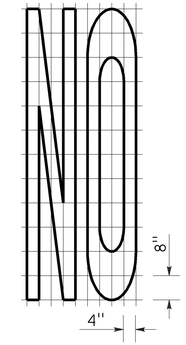

A=14 ft^2

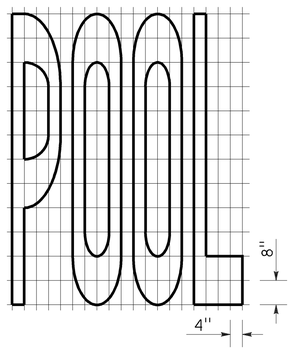

A=23 ft^2

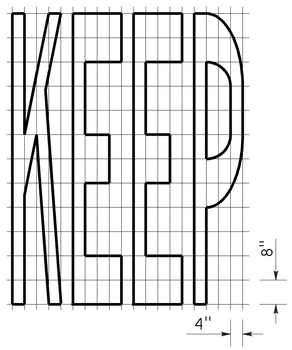

A=24 ft^2

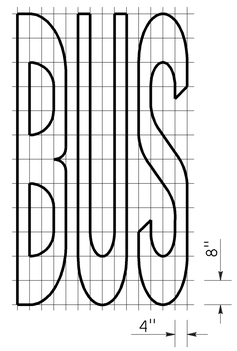

A=20 ft^2

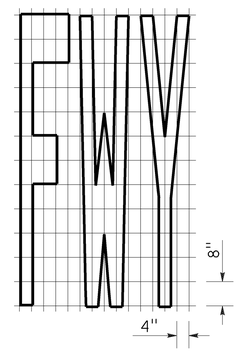

A=16 ft^2

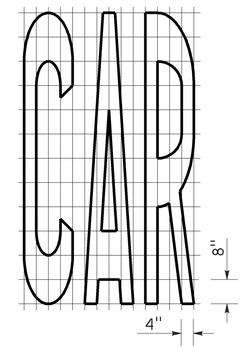

A=17 ft^2

WORD MARKINGS			
ITEM	ft^2	ITEM	ft^2
LANE	24	NO	14
POOL	23	BIKE	21
CAR	17	BUS	20
CLEAR	27	ONLY	22
KEEP	24	FWY	16

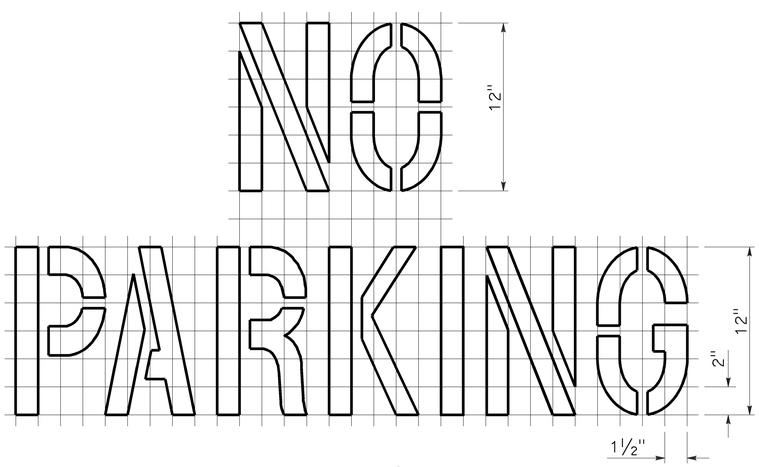

A=2 ft^2
See Notes 6 and 7

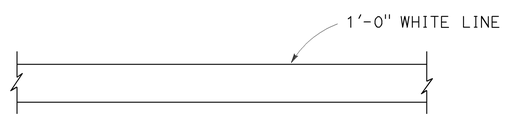

LIMIT LINE (STOP LINE)

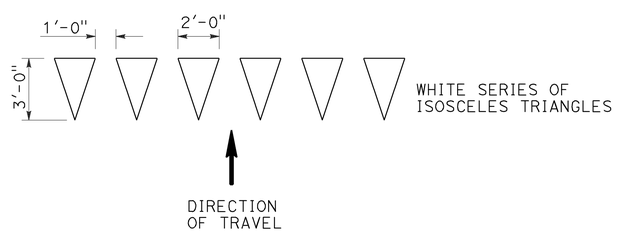

YIELD LINE

NOTES:

1. If a message consists of more than one word, it should read "UP", i.e., the first word should be nearest the driver.
2. The space between words should be at least four times the height of the characters for low speed roads, but not more than ten times the height of the characters. The space may be reduced appropriately where there is limited space because of local conditions.
3. Minor variations in dimensions may be accepted by the Engineer.
4. Portions of a letter, number or symbol may be separated by connecting segments not to exceed 2" in width.
5. The words "NO PARKING" pavement marking is to be used for parking facilities. For typical locations of markings, see Standard Plans A90A and A90B.
6. The words "NO PARKING", shall be painted in white letters no less than 1'-0" high on a contrasting background and located so that it is visible to traffic enforcement officials.

STATE OF CALIFORNIA
DEPARTMENT OF TRANSPORTATION

PAVEMENT MARKINGS
WORDS, LIMIT AND YIELD LINES

NO SCALE

RSP A24E DATED JULY 20, 2012 SUPERSEDES STANDARD PLAN A24E
DATED MAY 20, 2011 - PAGE 17 OF THE STANDARD PLANS BOOK DATED 2010.

REVISED STANDARD PLAN RSP A24E

6-12-12

Dist	COUNTY	ROUTE	POST MILES TOTAL PROJECT	SHEET No.	TOTAL SHEETS
03	Pla	267	0.0/6.8	42	65

REGISTERED CIVIL ENGINEER

July 20, 2012
PLANS APPROVAL DATE

REGISTERED PROFESSIONAL ENGINEER
Roberta L. McLaughlin
No. C40375
Exp. 3-31-13
CIVIL
STATE OF CALIFORNIA

THE STATE OF CALIFORNIA OR ITS OFFICERS OR AGENTS SHALL NOT BE RESPONSIBLE FOR THE ACCURACY OR COMPLETENESS OF SCANNED COPIES OF THIS PLAN SHEET.

TO ACCOMPANY PLANS DATED 5-12-14

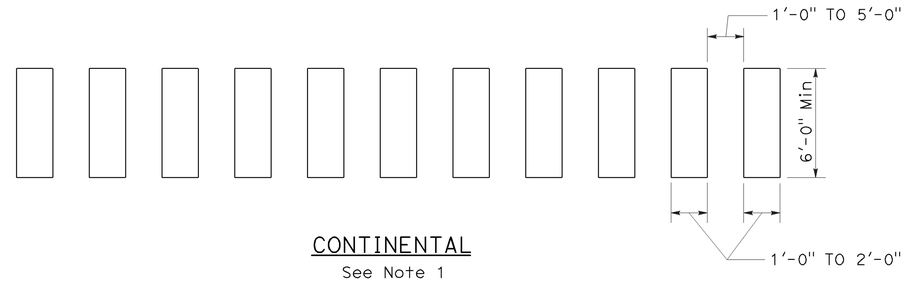

CONTINENTAL
See Note 1

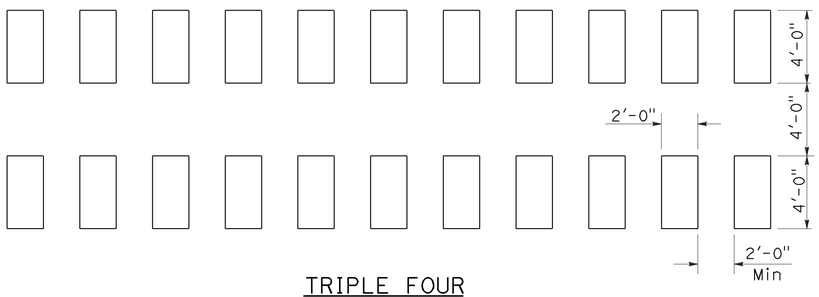

TRIPLE FOUR
See Note 1

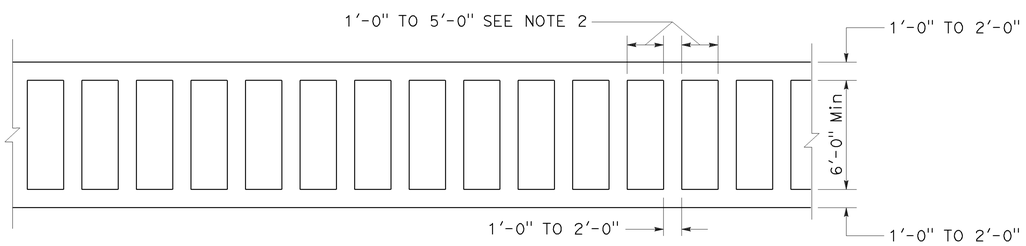

LADDER

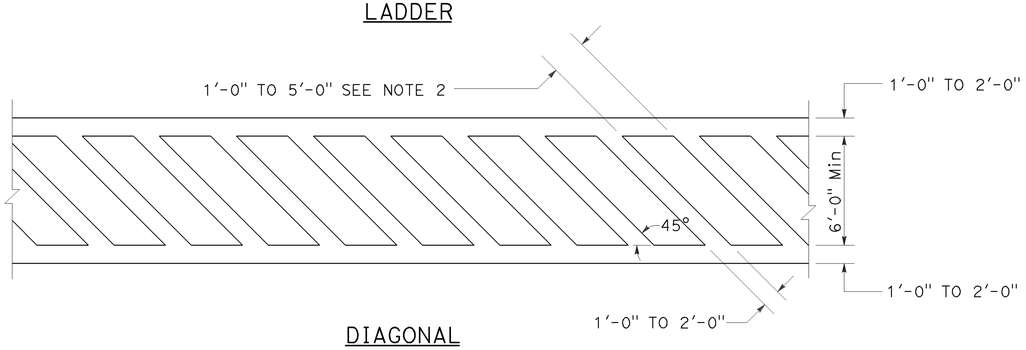

DIAGONAL

HIGHER VISIBILITY CROSSWALKS

NOTES:

1. Spaces between markings should be placed in wheel tracks of each lane.
2. Spacings not to exceed 2.5 times width of longitudinal line.
3. All crosswalk markings must be white except for those near schools must be yellow.

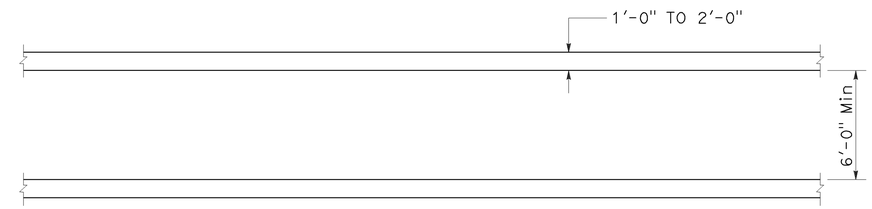

BASIC

STATE OF CALIFORNIA
DEPARTMENT OF TRANSPORTATION

PAVEMENT MARKINGS CROSSWALKS

NO SCALE

RSP A24F DATED JULY 20, 2012 SUPPLEMENTS THE STANDARD PLANS BOOK DATED 2010.

REVISED STANDARD PLAN RSP A24F

2010 REVISED STANDARD PLAN RSP A24F

6-28-12

Dist	COUNTY	ROUTE	POST MILES TOTAL PROJECT	SHEET No.	TOTAL SHEETS
03	Pla	267	0.0/6.8	43	65

Randell D. Hiatt
REGISTERED CIVIL ENGINEER

July 19, 2013
PLANS APPROVAL DATE

REGISTERED PROFESSIONAL ENGINEER
Randell D. Hiatt
No. C50200
Exp. 6-30-15
CIVIL
STATE OF CALIFORNIA

THE STATE OF CALIFORNIA OR ITS OFFICERS OR AGENTS SHALL NOT BE RESPONSIBLE FOR THE ACCURACY OR COMPLETENESS OF SCANNED COPIES OF THIS PLAN SHEET.

TO ACCOMPANY PLANS DATED 5-12-14

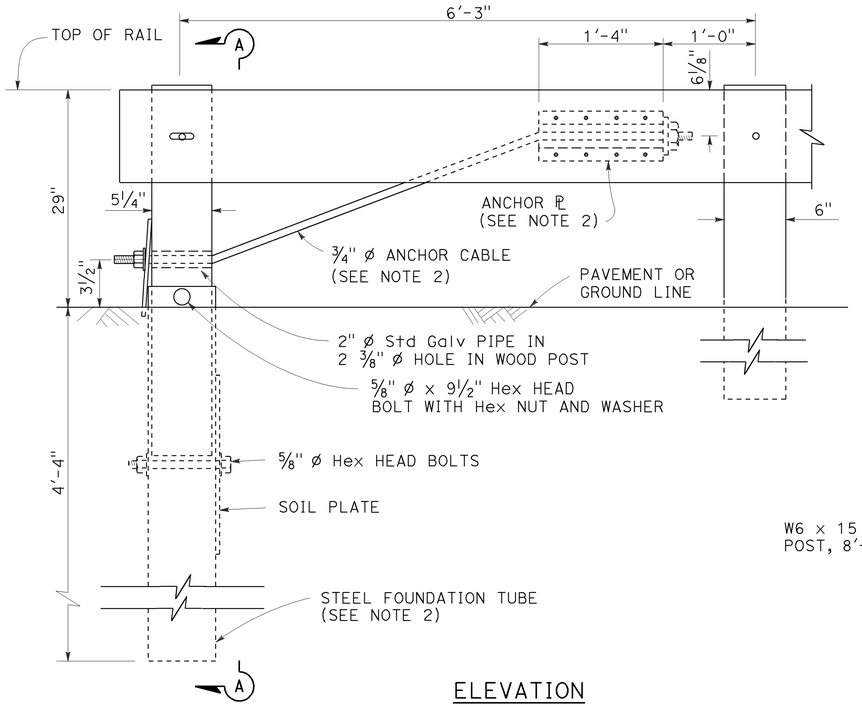

ELEVATION
END ANCHOR
ASSEMBLY (TYPE SFT)

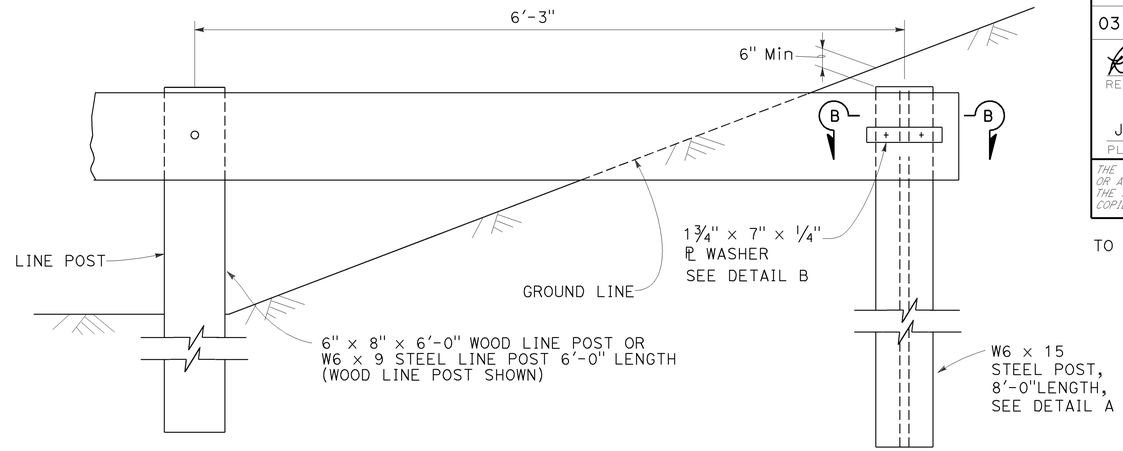

BURIED POST END ANCHOR

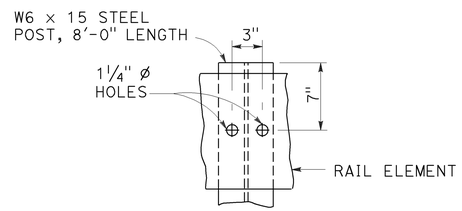

DETAIL A

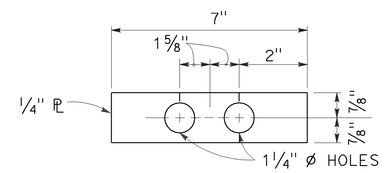

DETAIL B

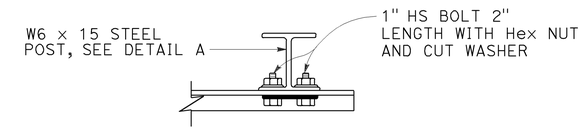

SECTION B-B

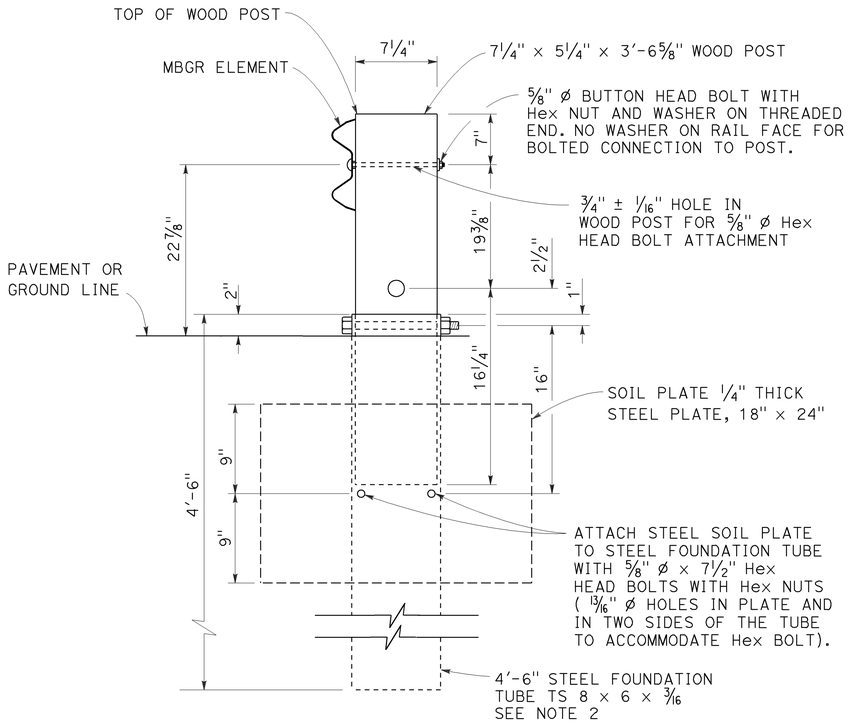

SECTION A-A

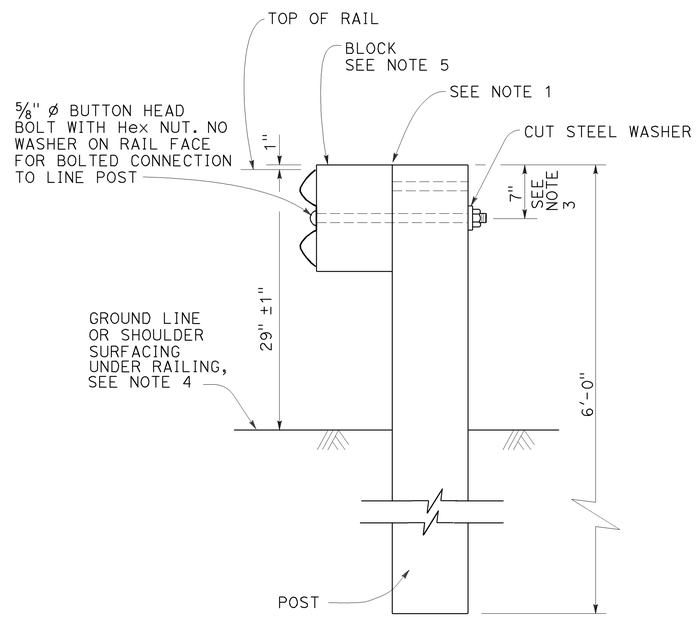

TYPICAL LINE
POST INSTALLATION

NOTES:

1. For wood post and wood block, toenail with 2-16d Galv nails in top of block. For steel post and notched wood or plastic block, notched face of block faces steel post.
2. A 6'-0" Length steel foundation tube, TS 8 x 6 x 3/16, without a soil plate, may be furnished and installed in place of the 4'-6" length steel foundation tube and soil plate shown, Minimum embadment of the 6'-0" length tube shall be 5'-9". A 5/8" ø Hex head bolt and nut shall be installed in the hole in the 6'-0" length tube to keep the wood post from dropping into the tube.
3. To connect railing to 27" terminal system end treatment, transition the top of railing height at a ratio of 120:1 to terminal system end treatment height plus one 12'-6" standard railing section at the transitioned height for a horizontal connection to the end treatment.
4. Install posts in soil.
5. See Revised Standard Plans RSP A77N1 and RSP A77N2 for details.
6. Holes excavation in the slope to construct the buried post end anchor shall be backfilled with selected earth, placed in layers approximately 1'-0" thick. Each layer shall be moistened and thoroughly compacted.

STATE OF CALIFORNIA
DEPARTMENT OF TRANSPORTATION

METAL BEAM GUARD RAILING RECONSTRUCT INSTALLATION

NO SCALE

RSP A77L3 DATED JULY 19, 2013 SUPPLEMENTS THE STANDARD PLANS BOOK DATED 2010.

REVISED STANDARD PLAN RSP A77L3

2010 REVISED STANDARD PLAN RSP A77L3

7-16-13

Dist	COUNTY	ROUTE	POST MILES TOTAL PROJECT	SHEET No.	TOTAL SHEETS
03	Pla	267	0.0/6.8	44	65

Randell D. Hiatt
REGISTERED CIVIL ENGINEER

November 15, 2013
PLANS APPROVAL DATE

REGISTERED PROFESSIONAL ENGINEER
Randell D. Hiatt
No. C50200
Exp. 6-30-15
CIVIL
STATE OF CALIFORNIA

THE STATE OF CALIFORNIA OR ITS OFFICERS OR AGENTS SHALL NOT BE RESPONSIBLE FOR THE ACCURACY OR COMPLETENESS OF SCANNED COPIES OF THIS PLAN SHEET.

TO ACCOMPANY PLANS DATED 5-12-14

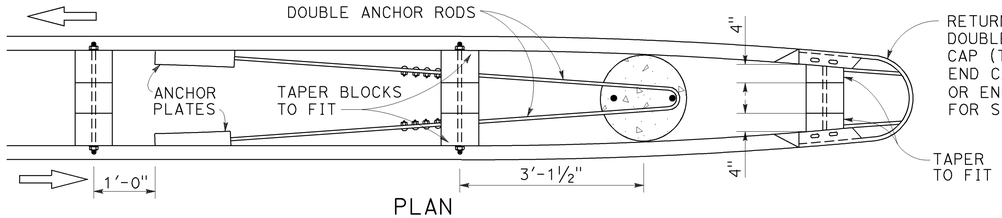

PLAN
See Note 4

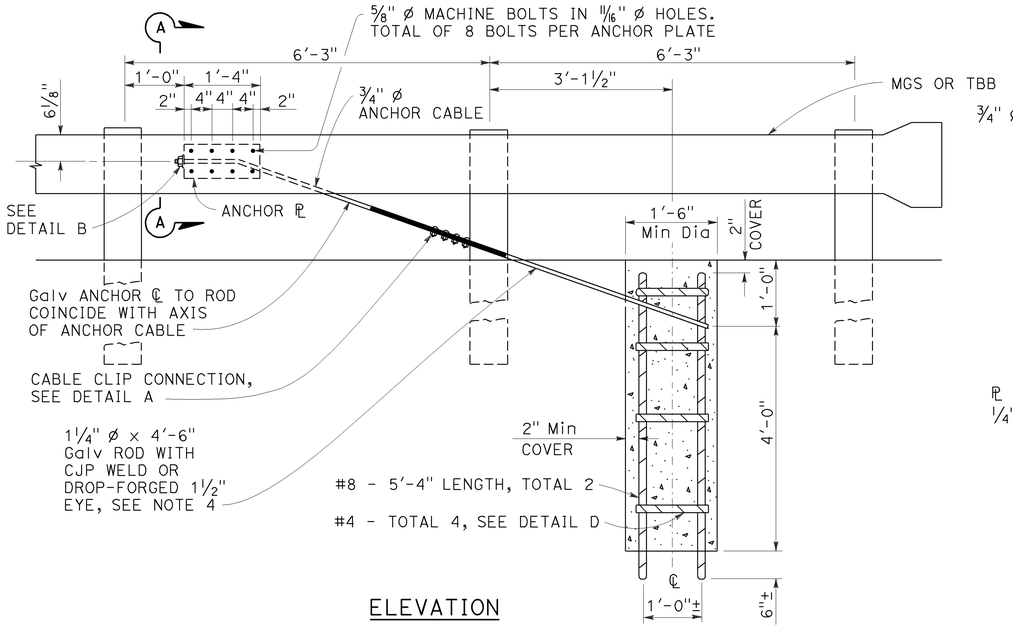

ELEVATION
END ANCHOR ASSEMBLY
(TYPE CA)
(Wood post, MGS shown, details similar for Thrie Beam Barrier.)

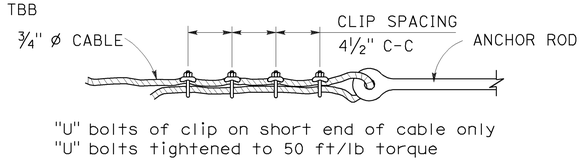

DETAIL A
CABLE CLIP CONNECTION

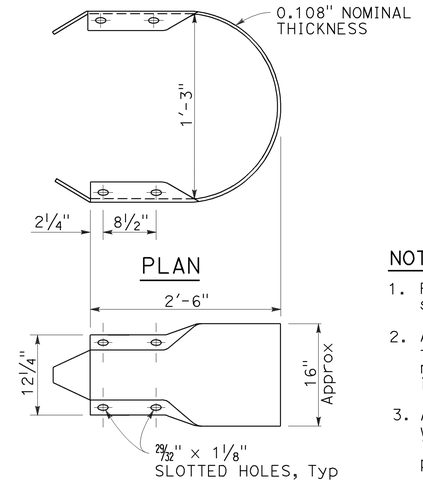

PLAN
ELEVATION
RETURN CAP
(TYPE A)

TO ACCOMPANY PLANS DATED 5-12-14

NOTES:

1. For typical use of this type of end anchor, see Revised Standard Plan RSP A78E2.
2. Anchor cable to be parallel to railing for straight runs of rail. Anchor cable may have angle point at anchor plate if railing is curved.
3. Anchor rod hooks to be in contact with anchor reinforcement when concrete is placed. Wire ties may be used to position anchor rods.
4. Single sided railing installations require only one anchor plate, anchor rod and anchor cable. Single sided railing will not have a rail element or blockouts on backside of line posts as shown in the plan view.

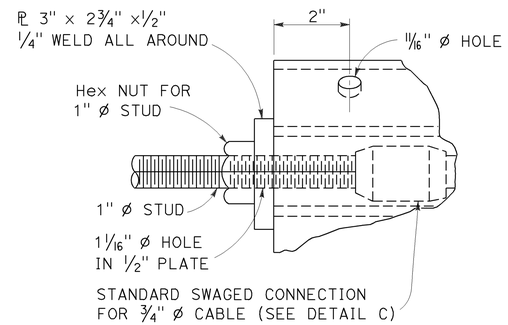

DETAIL B

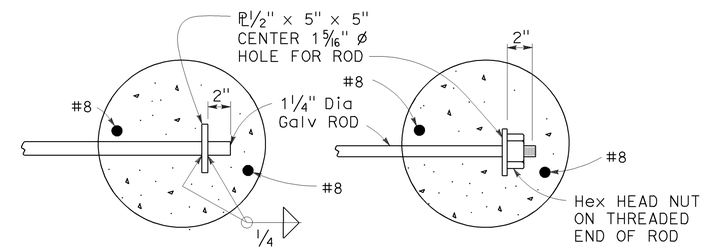

OPTIONAL ENDS ON SINGLE ANCHOR ROD
(Not to be used for double anchors)

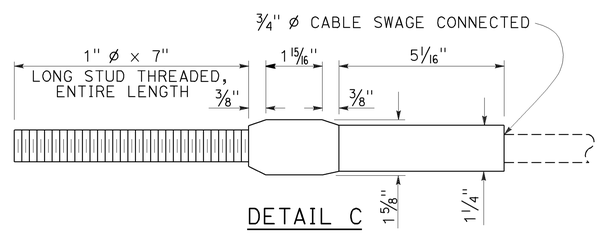

DETAIL C

ANCHOR CABLE WITH
SWAGED FITTING AND STUD

NOTE:
Use two 1¼" Ø Galv rods with hook and eye for double MGS anchor.

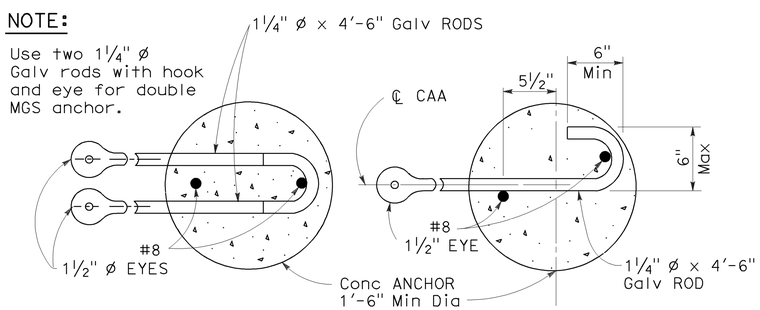

DOUBLE ANCHOR
SINGLE ANCHOR
ANCHOR RODS

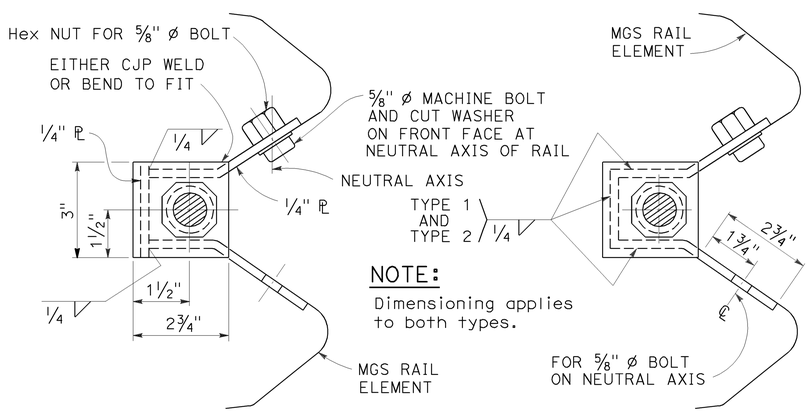

SECTION A-A
(Alternative Type 1)

SECTION A-A
(Alternative Type 2)

ANCHOR PLATE DETAILS

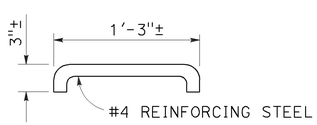

DETAIL D

STATE OF CALIFORNIA
DEPARTMENT OF TRANSPORTATION

METAL RAILING END ANCHOR ASSEMBLY (TYPE CA)

NO SCALE

RSP A77T1 DATED NOVEMBER 15, 2013 SUPERSEDES RSP A77T1 DATED JULY 19, 2013 THAT SUPPLEMENTS THE STANDARD PLANS BOOK DATED 2010.

REVISED STANDARD PLAN RSP A77T1

2010 REVISED STANDARD PLAN RSP A77T1

10-22-13

Dist	COUNTY	ROUTE	POST MILES TOTAL PROJECT	SHEET No.	TOTAL SHEETS
03	Pla	267	0.0/6.8	45	65

Randell D. Hiatt
REGISTERED CIVIL ENGINEER

July 19, 2013
PLANS APPROVAL DATE

REGISTERED PROFESSIONAL ENGINEER
Randell D. Hiatt
No. C50200
Exp. 6-30-15
CIVIL
STATE OF CALIFORNIA

THE STATE OF CALIFORNIA OR ITS OFFICERS OR AGENTS SHALL NOT BE RESPONSIBLE FOR THE ACCURACY OR COMPLETENESS OF SCANNED COPIES OF THIS PLAN SHEET.

TO ACCOMPANY PLANS DATED 5-12-14

NOTES:

1. Refer to Revised Standard Plans RSP A77L1 and RSP A77L2 for component details for MGS not shown on this plan.
2. All posts for any standard barrier run shall be of the same type: Wood or Steel.
3. Install posts in soil.

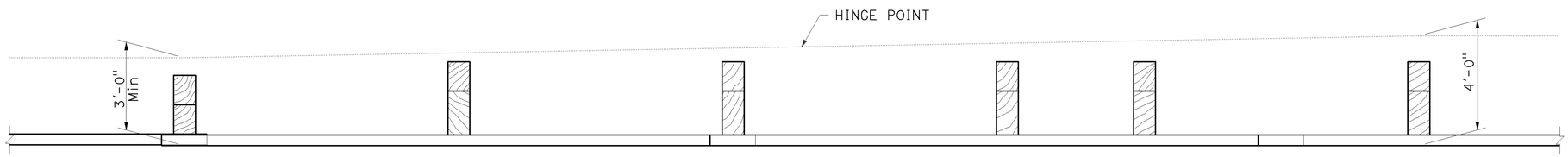

PLAN

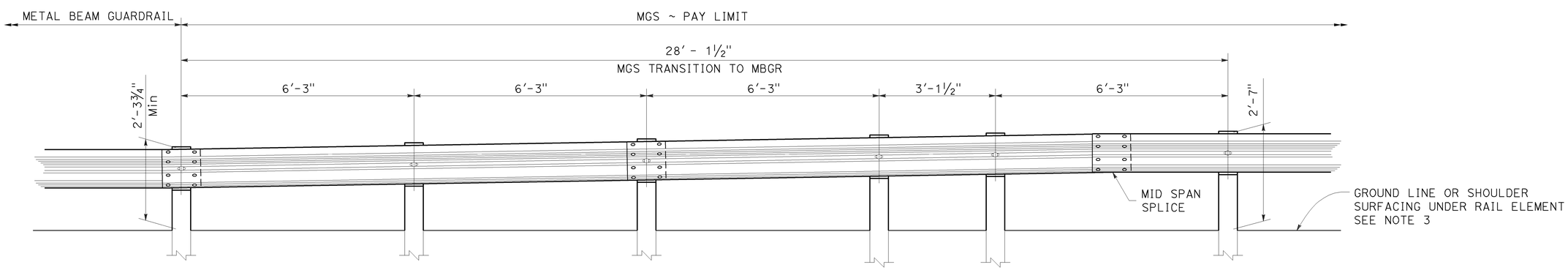

ELEVATION

STATE OF CALIFORNIA
DEPARTMENT OF TRANSPORTATION

MIDWEST GUARDRAIL SYSTEM TRANSITION TO METAL BEAM GUARDRAIL

NO SCALE

RSP A77U5 DATED JULY 19, 2013 SUPPLEMENTS THE STANDARD PLANS BOOK DATED 2010.

REVISED STANDARD PLAN RSP A77U5

2010 REVISED STANDARD PLAN RSP A77U5

6-20-13

Dist	COUNTY	ROUTE	POST MILES TOTAL PROJECT	SHEET No.	TOTAL SHEETS
03	Pla	267	0.0/6.8	46	65

Randell D. Hiatt
REGISTERED CIVIL ENGINEER

July 19, 2013
PLANS APPROVAL DATE

REGISTERED PROFESSIONAL ENGINEER
Randell D. Hiatt
No. C50200
Exp. 6-30-15
CIVIL
STATE OF CALIFORNIA

THE STATE OF CALIFORNIA OR ITS OFFICERS OR AGENTS SHALL NOT BE RESPONSIBLE FOR THE ACCURACY OR COMPLETENESS OF SCANNED COPIES OF THIS PLAN SHEET.

TO ACCOMPANY PLANS DATED 5-12-14

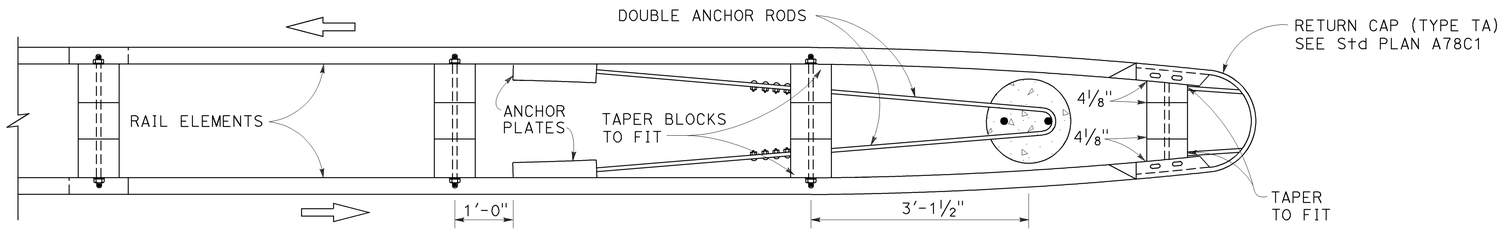

PLAN

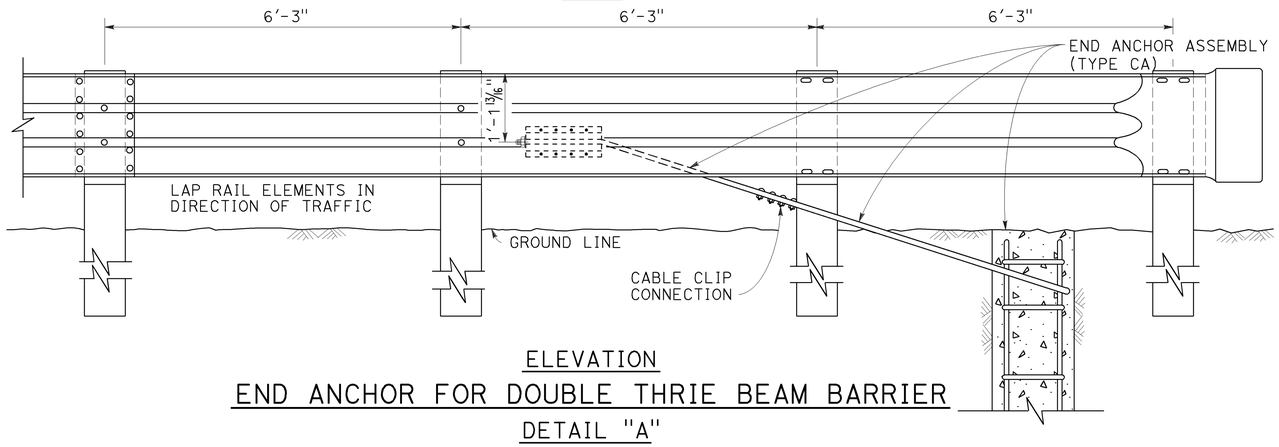

ELEVATION

END ANCHOR FOR DOUBLE THRIE BEAM BARRIER

DETAIL "A"

NOTES:

1. For End Anchor Assembly (Type CA) details, see Revised Standard Plan RSP A77T1.
2. The typical passageway opening for motorcycles is 6'-0" to 8'-0". Generally, motorcycle passageways are not used where median width is less than 22'-0". The typical passageway opening for motor vehicles is 12'-0" to 16'-0". Generally, motor vehicle passageways are not used where median width is 32'-0" or less. See Project Plans for width of passageway opening.
3. Barrier end offsets from edge of traveled way vary depending on type of highway facility involved. End offsets other than 10'-0" will be shown on the Project Plans.
4. For typical flare offsets for 25'-0" length parabola with maximum offset of 1'-0", see Revised Standard Plan RSP A77P1.

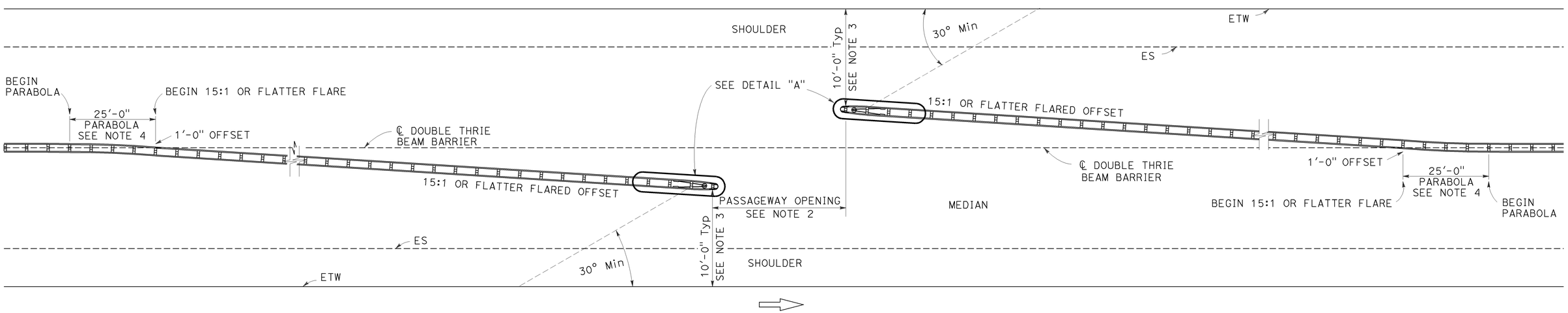

PLAN

EMERGENCY PASSAGEWAY IN THRIE BEAM BARRIER

STATE OF CALIFORNIA
DEPARTMENT OF TRANSPORTATION

DOUBLE THRIE BEAM BARRIER EMERGENCY PASSAGEWAY AND END ANCHOR ASSEMBLY DETAILS

NO SCALE

RSP A78E2 DATED JULY 19, 2013 SUPERSEDES STANDARD PLAN A78E2
DATED MAY 20, 2011 - PAGE 100 OF THE STANDARD PLANS BOOK DATED 2010.

REVISED STANDARD PLAN RSP A78E2

2010 REVISED STANDARD PLAN RSP A78E2

6-27-13

Dist	COUNTY	ROUTE	POST MILES TOTAL PROJECT	SHEET No.	TOTAL SHEETS
03	Pla	267	0.0/6.8	47	65

REGISTERED CIVIL ENGINEER

July 19, 2013
PLANS APPROVAL DATE

REGISTERED PROFESSIONAL ENGINEER
Michael Janzen
No. 44788
Exp. 03-31-14
CIVIL
STATE OF CALIFORNIA

THE STATE OF CALIFORNIA OR ITS OFFICERS OR AGENTS SHALL NOT BE RESPONSIBLE FOR THE ACCURACY OR COMPLETENESS OF SCANNED COPIES OF THIS PLAN SHEET.

TO ACCOMPANY PLANS DATED 5-12-14

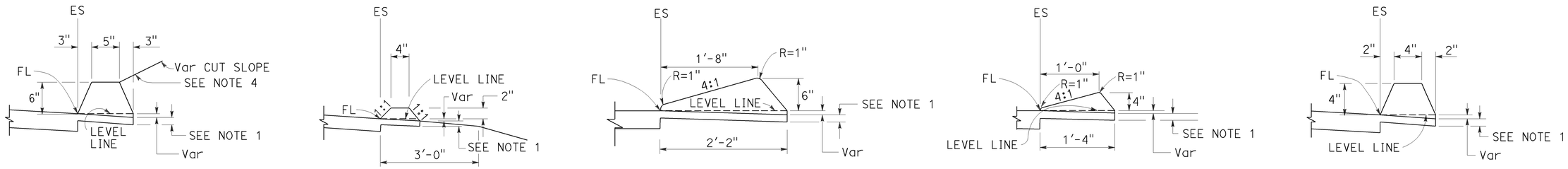

TYPE A
See Note 3

TYPE C

TYPE D

TYPE E

TYPE F
See Note 5

DIKES

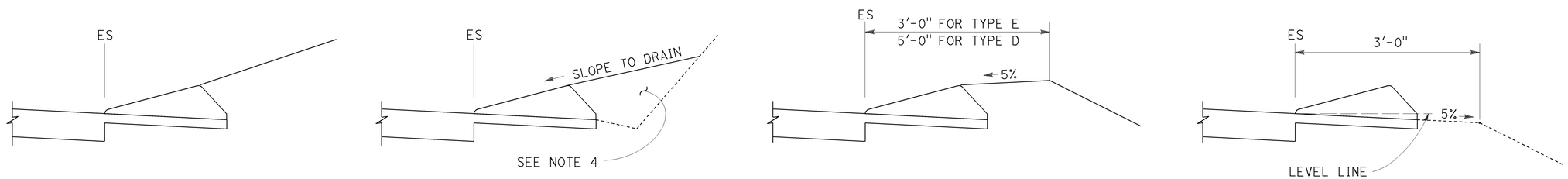

CASE C-1
Cut Slope

CASE C-2
Cut Slope

CASE F

CASE R
See Note 2

TYPE D AND E BACKFILL DETAILS

NOTES:

1. For HMA shoulders only, extend top layer of HMA placed on the shoulder under dike with no joint at the ES. For projects with OGFC shoulders, do not extend OGFC under dike. See project plans for modified dike detail.
2. Case R applies to retrofit only projects where restrictive conditions do not provide enough width for Case F backfill.
3. Type A dike only to be used where restrictive slope conditions do not provide enough width to use Type D or Type E dike.
4. Fill and compact with excavated material to top of dike.
5. Use Type F dike, where dike is required with guard railing installations. See Revised Standard Plan RSP A77N4 for dike positioning details.

DIKE QUANTITIES

TYPE	CUBIC YARDS PER LINEAR FOOT
A	0.0135
C	0.0038
D	0.0293
E	0.0130
F	0.0066

Quantities based on 5% cross slope.

STATE OF CALIFORNIA
DEPARTMENT OF TRANSPORTATION

HOT MIX ASPHALT DIKES

NO SCALE

RSP A87B DATED JULY 19, 2013 SUPERSEDES STANDARD PLAN A87B
DATED MAY 20, 2011 - PAGE 120 OF THE STANDARD PLANS BOOK DATED 2010.

REVISED STANDARD PLAN RSP A87B

2010 REVISED STANDARD PLAN RSP A87B

6-27-13

Dist	COUNTY	ROUTE	POST MILES TOTAL PROJECT	SHEET No.	TOTAL SHEETS
03	Pla	267	0.0/6.8	48	65

REGISTERED CIVIL ENGINEER

March 21, 2014
PLANS APPROVAL DATE

REGISTERED PROFESSIONAL ENGINEER Hector David Cordova No. C41957 Exp. 3-31-14 CIVIL STATE OF CALIFORNIA

THE STATE OF CALIFORNIA OR ITS OFFICERS OR AGENTS SHALL NOT BE RESPONSIBLE FOR THE ACCURACY OR COMPLETENESS OF SCANNED COPIES OF THIS PLAN SHEET.

TO ACCOMPANY PLANS DATED 5-12-14

2010 REVISED STANDARD PLAN RSP A88A

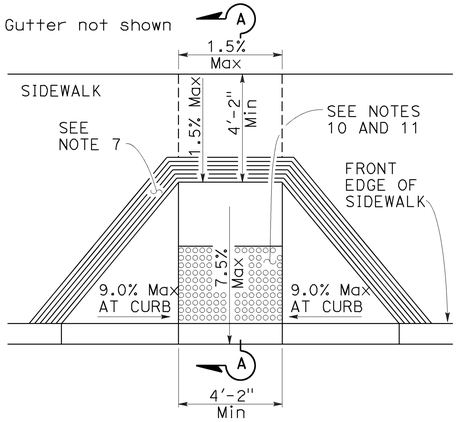

CASE A

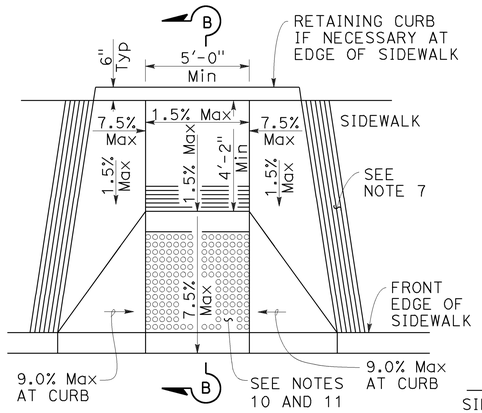

CASE B

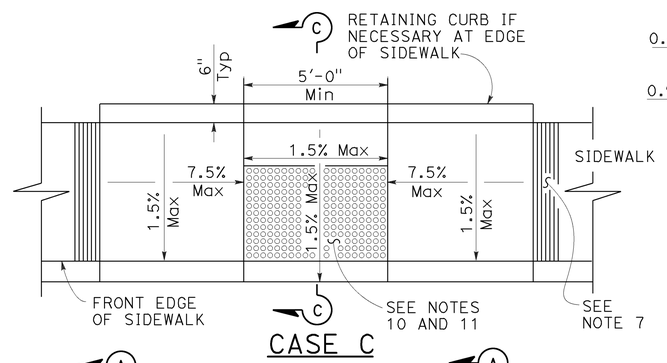

CASE C

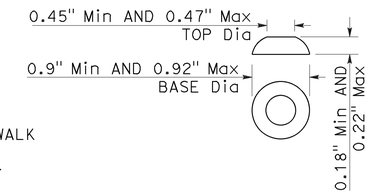

RAISED TRUNCATED DOME

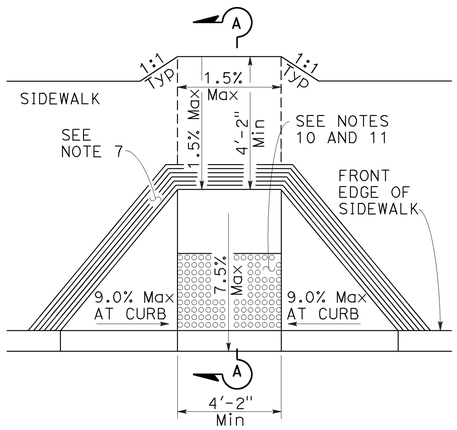

CASE D

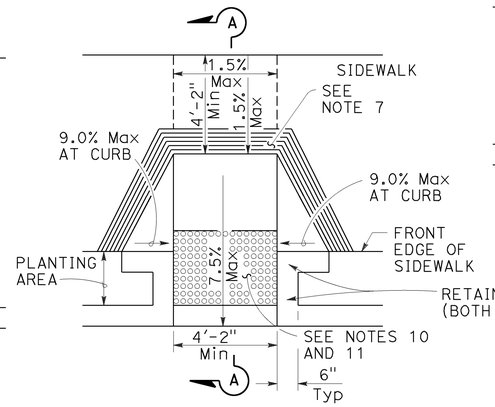

CASE E

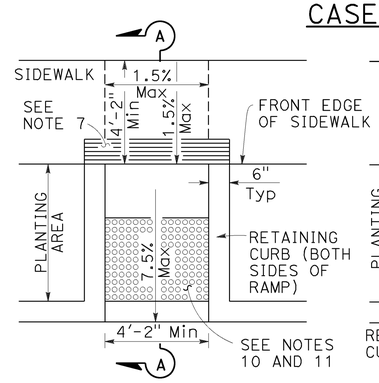

CASE F

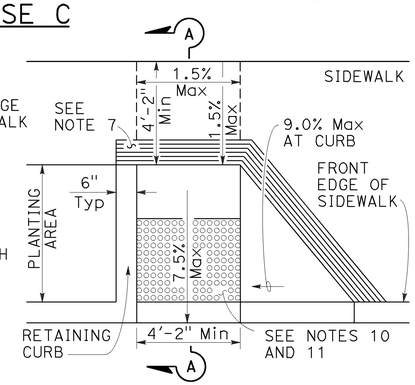

CASE G

See Note 4

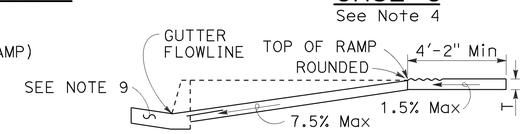

SECTION A-A

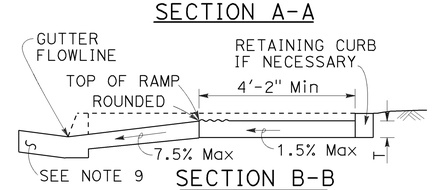

SECTION B-B

Depress entire sidewalk as required

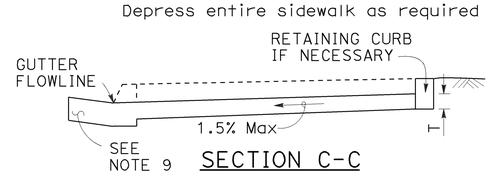

SECTION C-C

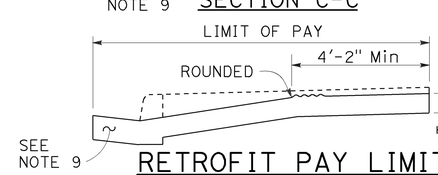

RETROFIT PAY LIMITS

Existing curb and sidewalk

RAISED TRUNCATED DOME PATTERN (IN-LINE)

DETECTABLE WARNING SURFACE

See Note 10

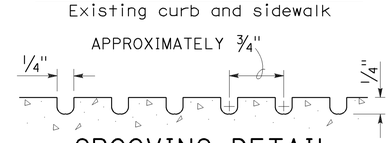

GROOVING DETAIL

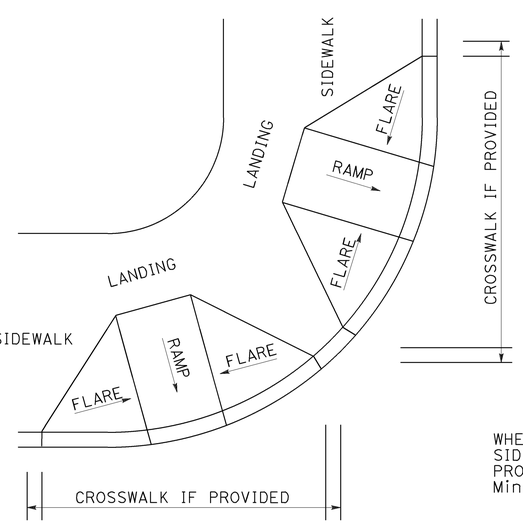

DETAIL A

TYPICAL TWO-RAMP CORNER INSTALLATION

See Note 1

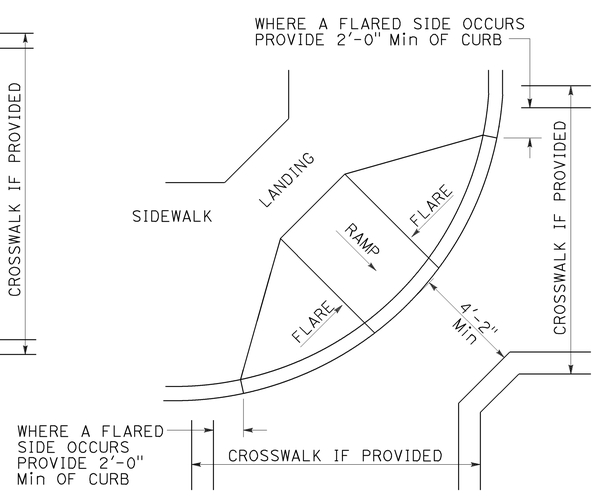

DETAIL B

TYPICAL ONE-RAMP CORNER INSTALLATION

See Notes 1 and 3

NOTES:

1. As site conditions dictate, Case A through Case G curb ramps may be used for corner installations similar to those shown in Detail A and Detail B. The case of curb ramps used in Detail A do not have to be the same. Case A through Case G curb ramps also may be used at mid block locations, as site conditions dictate.
2. If distance from curb to back of sidewalk is too short to accommodate ramp and 4'-2" platform (landing) as shown in Case A, the sidewalk may be depressed longitudinally as in Case B, or C or may be widened as in Case D.
3. When ramp is located in center of curb return, crosswalk configuration must be similar to that shown for Detail B.
4. As site conditions dictate, the retaining curb side and the flared side of the Case G ramp shall be constructed in reversed position.
5. If located on a curve, the sides of the ramp need not be parallel, but the minimum width of the ramp shall be 4'-2".
6. Side slope of ramp flares vary uniformly from a maximum of 9.0% at curb to conform with longitudinal sidewalk slope adjacent to top of the ramp, except in Case C and Case F.
7. The curb ramp shall be outlined, as shown, with a 1'-0" wide border with 1/4" grooves approximately 3/4" on center. See grooving detail.
8. Transitions from ramps and landing to walks, gutters or streets shall be flush (no lip) and free of abrupt changes.
9. Counter slopes of adjoining gutters and road surfaces immediately adjacent to and within 24 inches of the curb ramp shall not be steeper than 1:20 (5.0%). Gutter pan slope shall not exceed 1" of depth for each 2'-0" of width.
10. Curb ramps shall have a detectable warning surface that extends the full width and 3'-0" depth of the ramp. A 4'-0" wide detectable warning surface may be used on a 4'-2" wide curb ramp. Detectable Warning Surfaces shall conform to the requirements in the Standard Specifications.
11. The edge of the detectable warning surface nearest the street shall be between 6" and 8" from the gutter flowline.
12. Sidewalk and ramp thickness, "T", shall be 3½" minimum.
13. Utility pull boxes, manholes, vaults and all other utility facilities within the boundaries of the curb ramp will be relocated or adjusted to grade by the owner prior to, or in conjunction with, curb ramp construction.
14. Detectable warning surface may have to be cut to allow removal of utility covers while maintaining full detectable warning width and depth.

STATE OF CALIFORNIA
DEPARTMENT OF TRANSPORTATION

CURB RAMP DETAILS

NO SCALE

RSP A88A DATED MARCH 21, 2014 SUPERSEDES RSP A88A DATED JULY 19, 2013 AND STANDARD PLAN A88A DATED MAY 20, 2011 - PAGE 121 OF THE STANDARD PLANS BOOK DATED 2010.

REVISED STANDARD PLAN RSP A88A

2-25-14

DIST	COUNTY	ROUTE	POST MILES TOTAL PROJECT	SHEET No.	TOTAL SHEETS
03	Pla	267	0.0/6.8	49	65

REGISTERED CIVIL ENGINEER

November 15, 2013
PLANS APPROVAL DATE

REGISTERED PROFESSIONAL ENGINEER Cornelis M. Hakim No. C55610 Exp. 12-31-14 CIVIL STATE OF CALIFORNIA

THE STATE OF CALIFORNIA OR ITS OFFICERS OR AGENTS SHALL NOT BE RESPONSIBLE FOR THE ACCURACY OR COMPLETENESS OF SCANNED COPIES OF THIS PLAN SHEET.

TO ACCOMPANY PLANS DATED 5-12-14

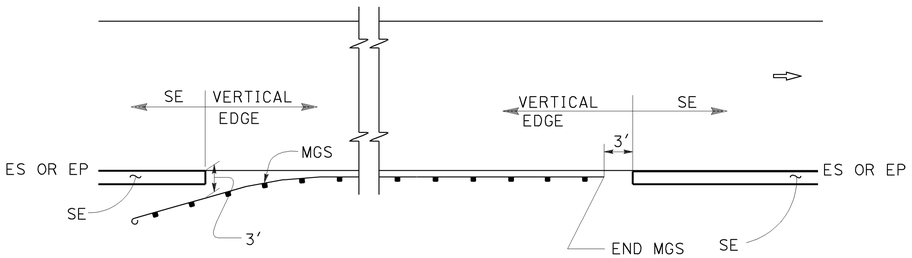

MGS

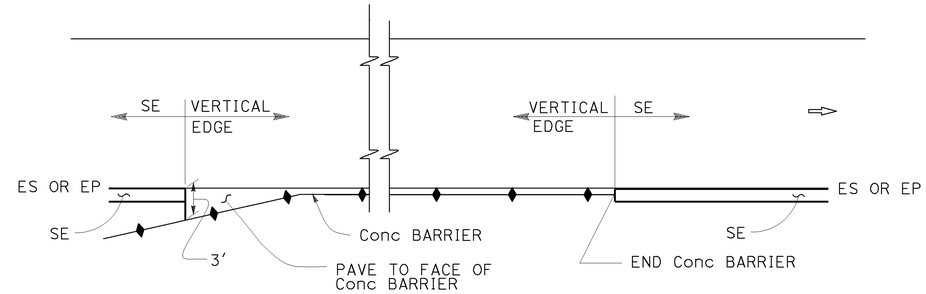

CONCRETE BARRIER

ABBREVIATIONS:

SE SAFETY EDGE

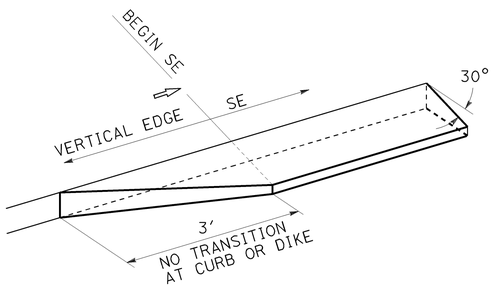

TRANSITION DETAIL FOR CONCRETE ONLY

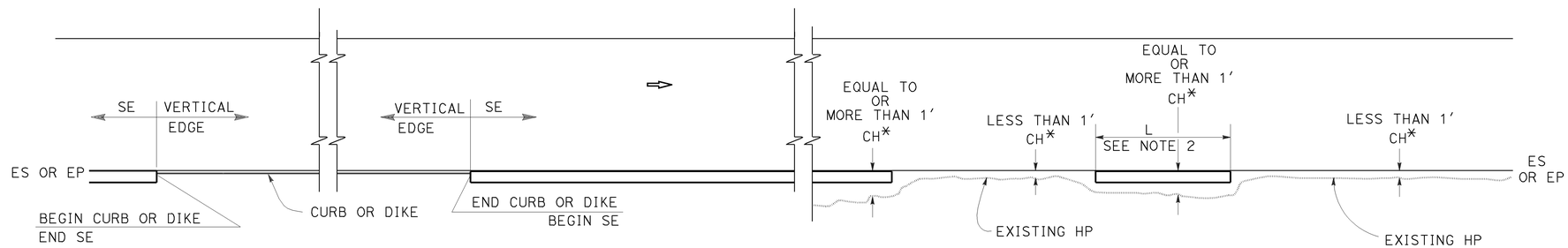

CURB OR DIKE

NARROW SIDE SLOPE

* CH = Distance from ES or EP to existing HP.

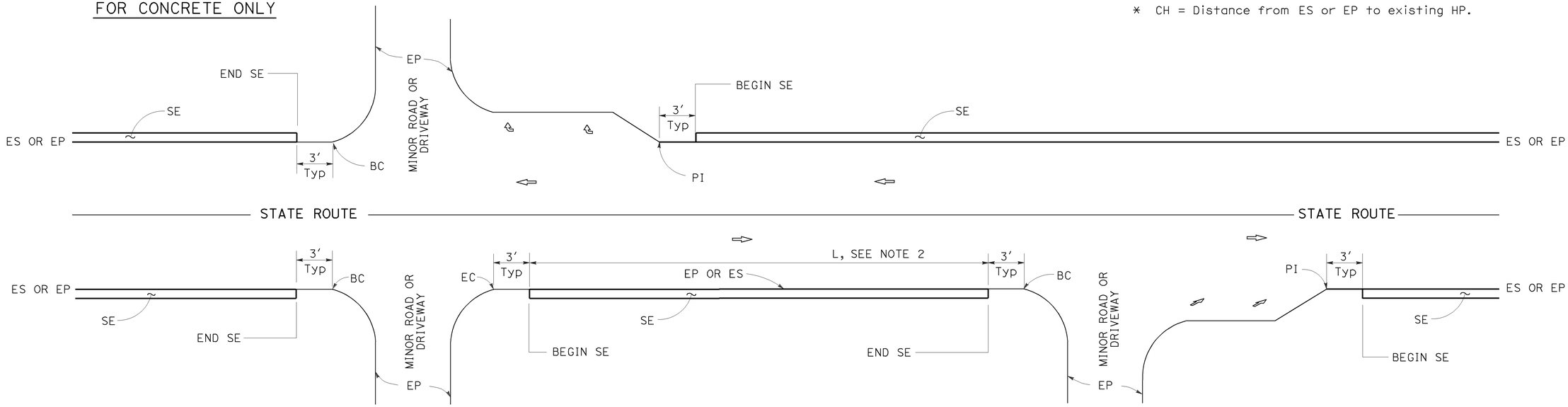

INTERSECTION

MINOR ROADWAY OR DRIVEWAY

DRIVEWAY AND INTERSECTION

NOTES:

1. For details not shown, see Revised Standard Plans RSP P75 and RSP P76.
2. Safety edge is optional when L is less than 30′.

STATE OF CALIFORNIA
DEPARTMENT OF TRANSPORTATION

PAVEMENT EDGE TREATMENTS

NO SCALE

RSP P74 DATED NOVEMBER 15, 2013 SUPERSEDES RSP P74 DATED JANUARY 20, 2012 THAT SUPPLEMENTS THE STANDARD PLANS BOOK DATED 2010.

REVISED STANDARD PLAN RSP P74

2010 REVISED STANDARD PLAN RSP P74

10-11-13

DIST	COUNTY	ROUTE	POST MILES TOTAL PROJECT	SHEET No.	TOTAL SHEETS
03	Pla	267	0.0/6.8	50	65

REGISTERED CIVIL ENGINEER

November 15, 2013
PLANS APPROVAL DATE

REGISTERED PROFESSIONAL ENGINEER Cornelis M. Hakim No. C55610 Exp. 12-31-14 CIVIL STATE OF CALIFORNIA

THE STATE OF CALIFORNIA OR ITS OFFICERS OR AGENTS SHALL NOT BE RESPONSIBLE FOR THE ACCURACY OR COMPLETENESS OF SCANNED COPIES OF THIS PLAN SHEET.

TO ACCOMPANY PLANS DATED 5-12-14

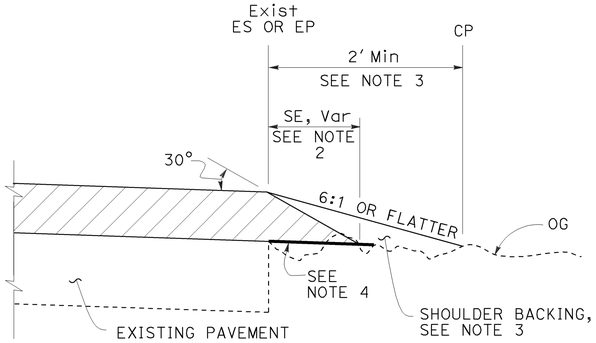

CASE A
Safety Edge

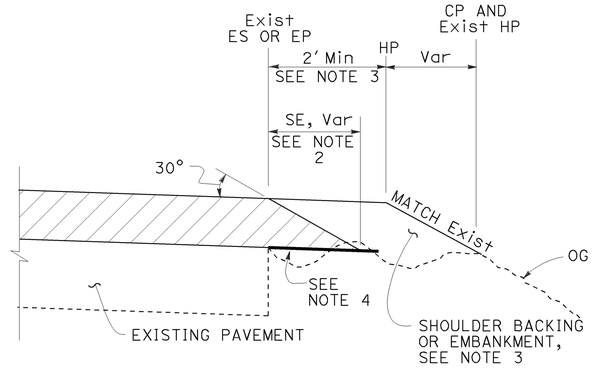

CASE B
Safety Edge

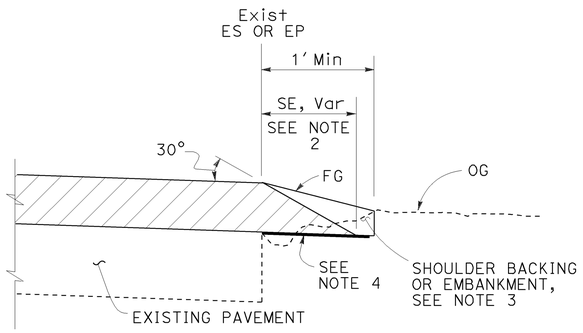

CASE C
Safety Edge

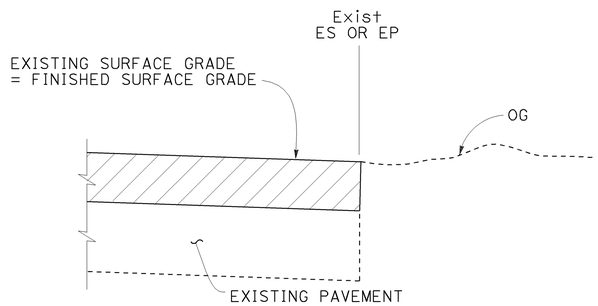

CASE D
Vertical Edge

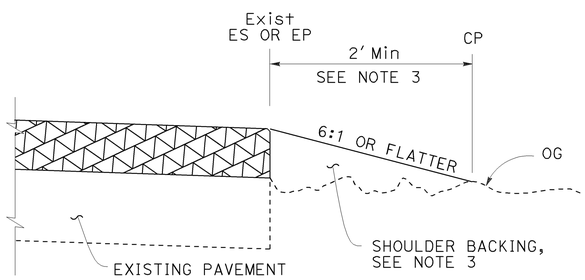

CASE E
Vertical Edge

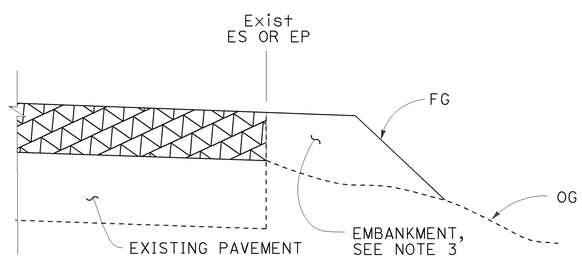

CASE F
Vertical Edge
* See Table A and Revised Std Plan RSP P74

LEGEND:

- HMA OVERLAY
- HMA OR CONCRETE OVERLAY
- CONCRETE OVERLAY

ABBREVIATIONS:

SE SAFETY EDGE
TT TOTAL THICKNESS OF SE

TABLE A
EDGE TREATMENT FOR VARIOUS OVERLAY THICKNESS AND CONDITIONS

	OVERLAY THICKNESS	
FIELD CONDITION	LESS THAN 0.15'	0.15' OR MORE
Exist SLOPE 6:1 OR FLATTER	CASE E	CASE A
Exist SLOPE 3:1 TO 6:1	CASE E	CASE B
Exist SLOPE STEEPER THAN 3:1	CASE F	CASE F
CUT SECTION (REPLACE, COLD PLANE, MILL PAVEMENT)	CASE D	CASE C

ADDITIONAL HMA OR CONCRETE QUANTITIES FOR SE/SIDE/MILE

TYPICAL CROSS SECTION	TT	TOTAL ADDITIONAL MATERIAL FOR SE/SIDE/MILE		
		HMA (TON)	CONCRETE (CY)*	CONCRETE (CY)**
TT	0.15'	NA	NA	NA
	0.20'	13.7	NA	NA
	0.30'	30.9	NA	NA
	0.40'	54.9	NA	NA
	0.45'	69.4	NA	NA
TT 0.43'	0.50'	84.2	NA	NA
	0.60'	113.9	NA	NA
	0.70'	143.6	70.9	94.2
	0.80'	173.3	85.6	112.2
	0.90'	203.0	100.3	130.2
	1.00'	232.7	114.9	148.2
	1.10'	262.4	129.6	166.2
	1.20'	292.1	144.3	184.2

* For Detail "A"
** For Optional Detail "A"

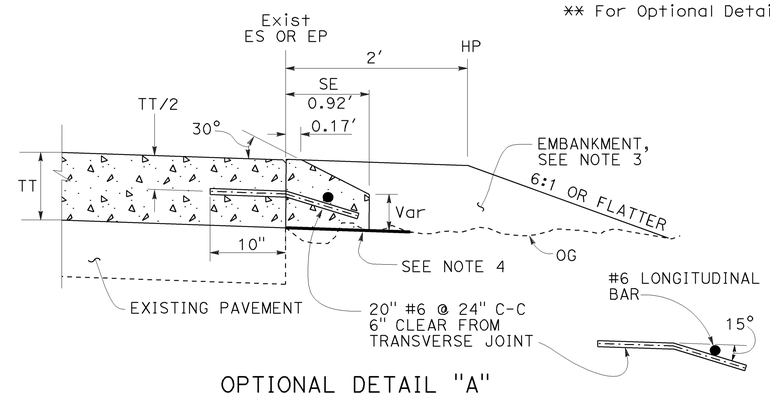

OPTIONAL DETAIL "A"
For concrete overlay
See Note 5

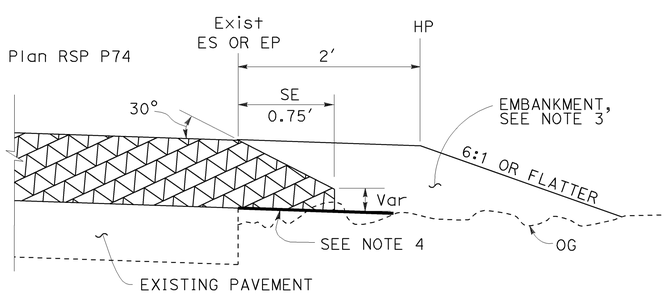

DETAIL "A"
For HMA overlay thickness more than 0.43' or concrete overlay

NOTES:

1. For limits of safety edge and vertical edge treatments, see Revised Standard Plan RSP P74.
2. Details shown for HMA overlay thickness less than 0.43'. See Detail "A" for HMA overlay thickness more than 0.43' or concrete overlay.
3. For locations and limits of shoulder backing or embankment see project plans.
4. Grade existing ground to place safety edge. 1' minimum width
5. Safety edge transverse joint must match overlay transverse joint. End of #6 longitudinal bar must be 2" ±½" clear from transverse joint.
6. Safety edge is not needed in the area of MGS, barrier, right turn lane and acceleration lane. See Revised Standard Plan RSP P74.

STATE OF CALIFORNIA
DEPARTMENT OF TRANSPORTATION

PAVEMENT EDGE TREATMENTS-OVERLAYS

NO SCALE

RSP P75 DATED NOVEMBER 15, 2013 SUPERSEDES RSP P75 DATED JANUARY 20, 2012 THAT SUPPLEMENTS THE STANDARD PLANS BOOK DATED 2010.

REVISED STANDARD PLAN RSP P75

2010 REVISED STANDARD PLAN RSP P75

10-4-13

TO ACCOMPANY PLANS DATED 5-12-14

Dist	COUNTY	ROUTE	POST MILES TOTAL PROJECT	SHEET No.	TOTAL SHEETS
03	Pla	267	0.0/6.8	51	65

REGISTERED CIVIL ENGINEER

October 19, 2012
PLANS APPROVAL DATE

REGISTERED PROFESSIONAL ENGINEER Glenn DeCou No. C34547 Exp. 9-30-13 CIVIL STATE OF CALIFORNIA

THE STATE OF CALIFORNIA OR ITS OFFICERS OR AGENTS SHALL NOT BE RESPONSIBLE FOR THE ACCURACY OR COMPLETENESS OF SCANNED COPIES OF THIS PLAN SHEET.

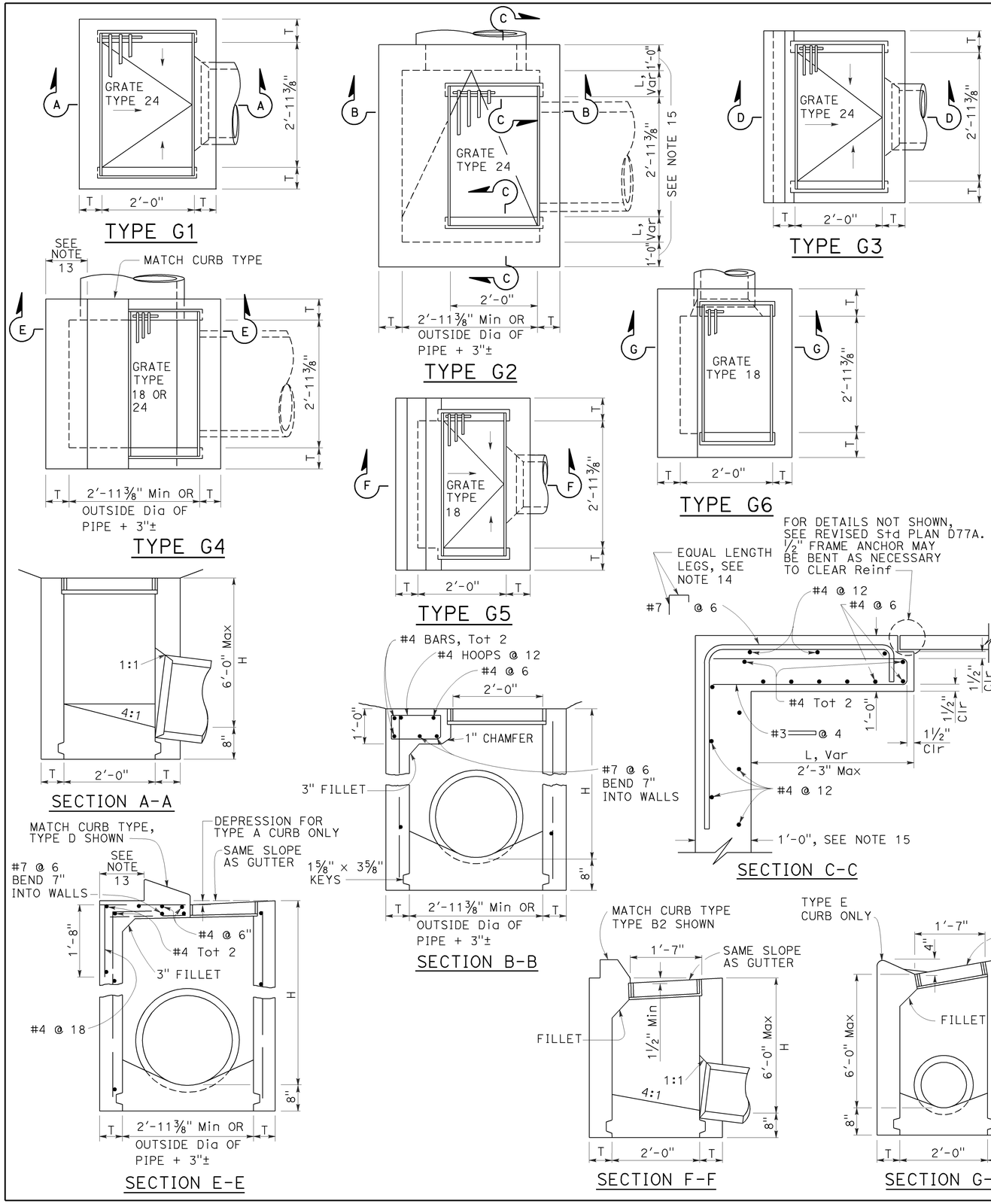

NOTES:

1. "H" is the difference in elevation between the outlet pipe flow line and the normal gutter grade line undepressed.
2. For "T" wall thickness, see Table A below.
3. Wall reinforcing not required when "H" is 8'-0" or less and the unsupported width or length is 7'-0" or less. Walls exceeding these limits shall be reinforced with #4 bars @ 1'-6" ± centers placed 1½" clear to inside of box unless otherwise shown.
4. Inlet bottom reinforcing not required. See Standard Plan D74C for alternative reinforced bottom and alternative half round bottom.
5. Steps-None required where "H" is less than 2'-6". Where "H" is 2'-6" or more, install steps with lowest rung 1'-0" above the floor and highest rung not more than 6" below top of inlet. The distance between steps shall not exceed 1'-0" and shall be uniform throughout the length of the wall. Place steps in the wall without an opening. Steps inserts may be substituted for the bar steps. Step inserts shall comply with State Industrial Safety requirements. See Standard Plan D74C for step details.
6. Details shown apply to both metal and concrete pipe.
7. Pipe(s) can be placed in any wall.
8. Curb section shall match adjacent curb.
9. Basin floors shall have wood trowel finish and a minimum slope of 12:3 from all directions toward outlet pipe.
10. Set inlet so that grate bars are parallel to direction of principal surface flow.
11. See Revised Standard Plans D77A and D77B for grate and frame details and weights of miscellaneous iron and steel.
12. See Standard Plan D78A for gutter depression details.
13. This dimenison will vary with different grates, curbs types, box width and wall thickness.
14. Bar may be rotated as necessary to clear opening. Where "L" is 6" or less, bar may be omitted.
15. Where "L" is 6" or less, wall thickness shall be as shown in Table A.
16. Cast-in-place inlets to be formed around all pipes/stubs intersecting the inlet, and concrete poured in one continuous operation. Precast inlets shall have mortared connections conforming to details for Type GCP Inlet shown on Standard Plan D75B. See Standard Specifications for mortar composition.

TABLE A

CONCRETE QUANTITIES				
TYPE	H=3'-0" TO 8'-0" (T=6")		H=8'-1" TO 20'-0" (T=8")	
	H=3'-0" (CY)	ADDITIONAL PCC PER FOOT (CY)	H=8'-1" (CY)	ADDITIONAL PCC PER FOOT (CY)
G-1	0.95	0.220	See Note A	SEE NOTE A
G-2*	1.31	0.255	3.50	0.357
G-3	1.03	0.220	See Note A	SEE NOTE A
G-4* (TYPE 24)	1.27	0.255	3.48	0.357
G-4* (TYPE 18)	1.30	0.255	3.50	0.357
G-5	1.02	0.220	SEE NOTE A	SEE NOTE A
G-6	1.04	0.220	SEE NOTE A	SEE NOTE A

TABLE BASED ON 8" FLOOR SLAB. NO DEDUCTIONS ARE TO BE MADE TO THESE QUANTITIES BECAUSE OF PIPE OPENINGS, DIFFERENT FLOOR ALTERNATIVES OR DIFFERENT CURB TYPES. * QUANTITIES FOR TYPE G-2 AND G-4 INLETS BASED ON THE MINIMUM INTERIOR DIMENSIONS.

NOTE A:

Maximum allowable height 6'-0".

STATE OF CALIFORNIA
DEPARTMENT OF TRANSPORTATION

DRAINAGE INLETS

NO SCALE

RSP D73 DATED OCTOBER 19, 2012 SUPERSEDES STANDARD PLAN D73 DATED MAY 20, 2011 - PAGE 156 OF THE STANDARD PLANS BOOK DATED 2010.

REVISED STANDARD PLAN RSP D73

2010 REVISED STANDARD PLAN RSP D73

7-19-12

Dist	COUNTY	ROUTE	POST MILES TOTAL PROJECT	SHEET No.	TOTAL SHEETS
03	Pla	267	0.0/6.8	52	65

Raymond Don Tsztoo
REGISTERED CIVIL ENGINEER

April 19, 2013
PLANS APPROVAL DATE

REGISTERED PROFESSIONAL ENGINEER Raymond Don Tsztoo No. C37332 Exp. 6-30-14 CIVIL STATE OF CALIFORNIA

THE STATE OF CALIFORNIA OR ITS OFFICERS OR AGENTS SHALL NOT BE RESPONSIBLE FOR THE ACCURACY OR COMPLETENESS OF SCANNED COPIES OF THIS PLAN SHEET.

TO ACCOMPANY PLANS DATED 5-12-14

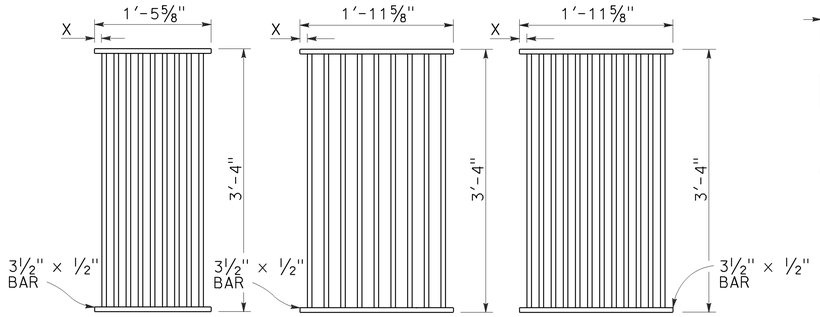

TYPE 18-9
1⅜" Clear spacing. Use within the roadbed on highways where bicycles and pedestrians are excluded.

TYPE 24-9
2" Clear spacing. Use in locations off the roadbed on all types of highways.

TYPE 24-12
1⅜" Clear spacing. Use within the roadbed on highways where bicycles and pedestrians are excluded.

RECTANGULAR GRATE DETAILS
(See table below)

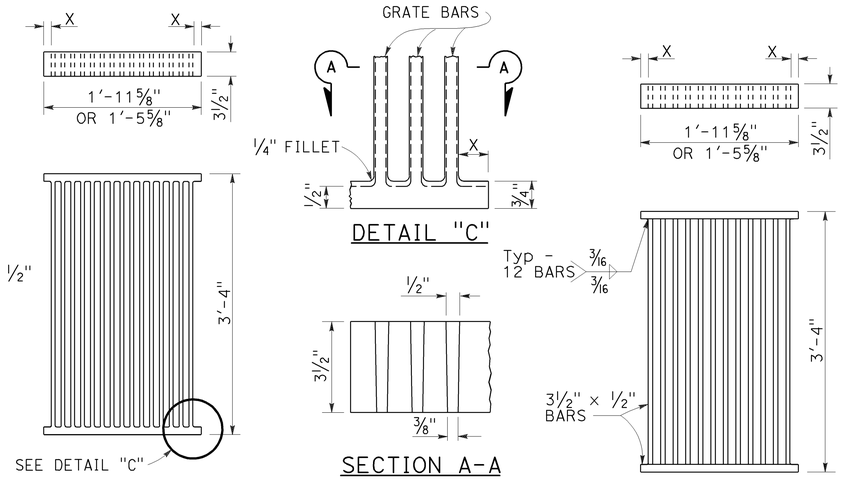

ALTERNATIVE CAST DUCTILE IRON GRATE OR CAST CARBON STEEL GRATE

ALTERNATIVE WELDED GRATE

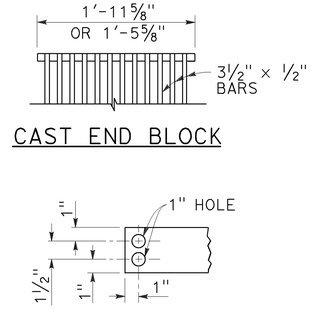

CAST END BLOCK

END OF BAR

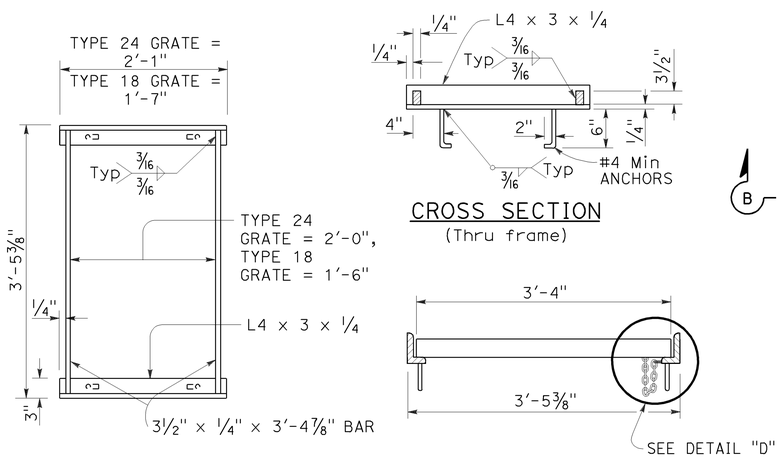

TYPICAL FRAME

CROSS SECTION
(Thru frame)

LONGITUDINAL SECTION
(Thru frame and grate)

RECTANGULAR FRAME DETAILS
(For all rectangular grates)

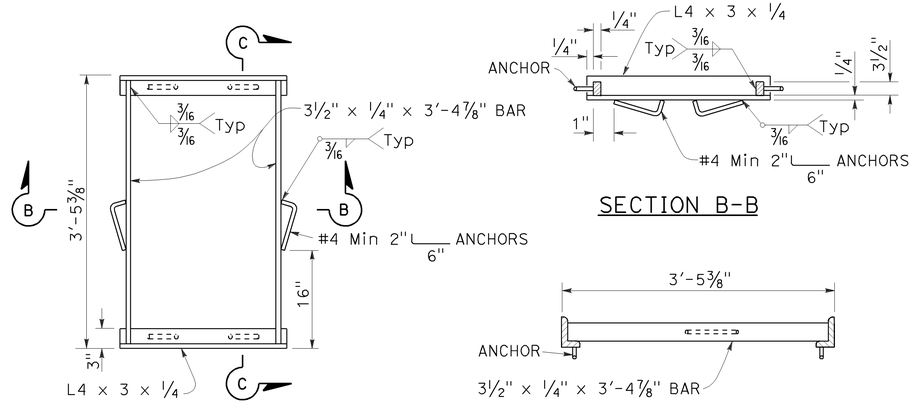

TYPICAL FRAME

SECTION B-B

SECTION C-C

ALTERNATIVE ANCHOR FOR RECTANGULAR FRAME
(For details not shown, See Rectangular Frame Details)

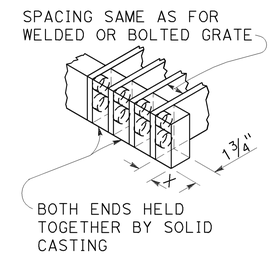

ALTERNATIVE CAST DUCTILE IRON OR CAST CARBON STEEL END BLOCK GRATE

NOTES:

1. Grate type numbers refer to approximate width of grate in inches and number of bars, respectively.
2. Contractor has the option of using cast ductile iron, cast carbon steel, welded, bolted, or cast end block grate.
3. Rounded top of bars optional on all grates.
4. Pipe inlets with a grate shall be placed so that bars parallel direction of principle surface flow.
5. Complete joint penetration butt welds may be substituted for the fillet welds on all anchors.
6. Standard square, hexagon, round or equivalent headed anchors may be substituted for the right angle hooks on the anchors shown on this plan.
7. Grate and frame weights are based on welded grates (weights of face angles, steps, protection bars, etc. are not included).
8. Connect chain to grate and frame only at locations shown on the plans. When chain is required, do not use cast ductile iron grates.

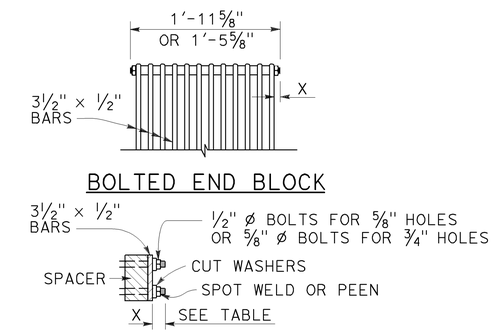

ALTERNATIVE BOLTED GRATE

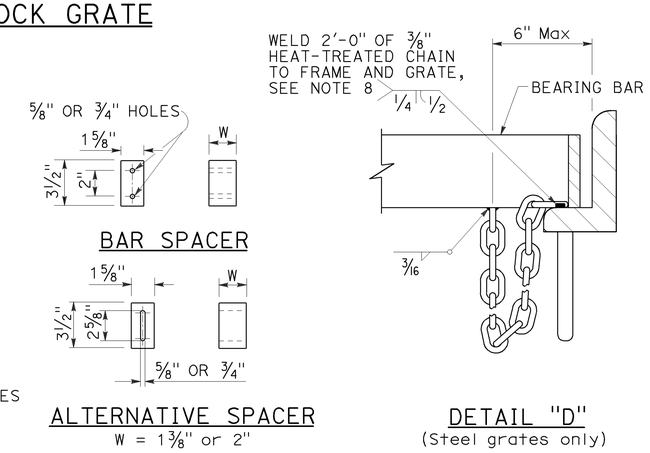

GRATE BAR SPACING TABLE

TYPE	No. OF BARS	CLEAR BAR SPACING	X
18-9	9	1⅜"	1 1/16"
24-9	9	2"	1 9/16"
24-12	12	1⅜"	1¼"

INLET TYPE	COVER TYPE	WEIGHT LB
OS	PLATE	174
OL-7	PLATE	170
OL-10	PLATE	170
OL-14	PLATE	170
OL-21	PLATE	170
OCP	PLATE	112
OCPI	PLATE	112
OCPI	REDWOOD	42
OMP	PLATE	177
OMPI	PLATE	177

INLET TYPE	GRATE TYPE	No. OF GRATES	WEIGHT LB
GDO	24-12	2	634
GOL-7	24-12	1	326
GOL-10	24-12	1	326
GO,G1,G2,G3,G4 (TYPE 24)	24-9	1	263
	24-12	1	326
G4 (TYPE 18),G5,G6	18-9	1	249
GT1	18-9	2	498
GT2	18-9	2	498
GT3	24-12	2	652
GT4	24-12	2	652
TRASH RACK			22
GRATE CHAIN			3

BASIS FOR Misc IRON & STEEL FINAL PAY WEIGHTS FOR DRAINAGE INLETS
(See Note 7)

STATE OF CALIFORNIA
DEPARTMENT OF TRANSPORTATION

GRATE DETAILS No. 1

NO SCALE

RSP D77A DATED APRIL 19, 2013 SUPERSEDES RSP D77A DATED JULY 20, 2012 AND STANDARD PLAN D77A DATED MAY 20, 2011 - PAGE 164 OF THE STANDARD PLANS BOOK DATED 2010.

REVISED STANDARD PLAN RSP D77A

2010 REVISED STANDARD PLAN RSP D77A

4-4-13

Dist	COUNTY	ROUTE	POST MILES TOTAL PROJECT	SHEET No.	TOTAL SHEETS
03	Pla	267	0.0/6.8	53	65

Raymond Don Tsztoo
REGISTERED CIVIL ENGINEER

April 19, 2013
PLANS APPROVAL DATE

REGISTERED PROFESSIONAL ENGINEER Raymond Don Tsztoo No. C37332 Exp. 6-30-14 CIVIL STATE OF CALIFORNIA

THE STATE OF CALIFORNIA OR ITS OFFICERS OR AGENTS SHALL NOT BE RESPONSIBLE FOR THE ACCURACY OR COMPLETENESS OF SCANNED COPIES OF THIS PLAN SHEET.

TO ACCOMPANY PLANS DATED 5-12-14

2010 REVISED STANDARD PLAN RSP D77B

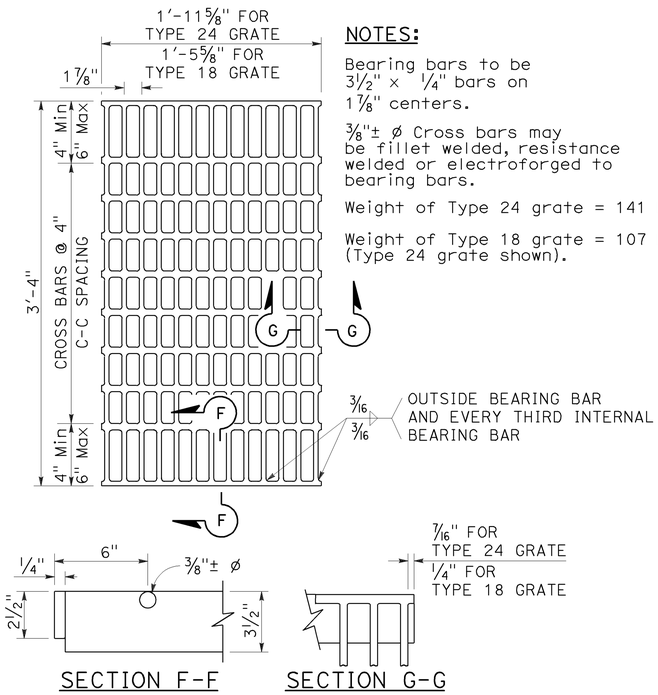

SECTION F-F SECTION G-G

TYPE 18-10 AND 24-13 GRATE

(Welded Steel)

NOTES:

Bearing bars to be 3½" × ¼" bars on 1⅞" centers.

⅜"± ø Cross bars may be fillet welded, resistance welded or electroforged to bearing bars.

Weight of Type 24 grate = 141 LBS.

Weight of Type 18 grate = 107 LBS. (Type 24 grate shown).

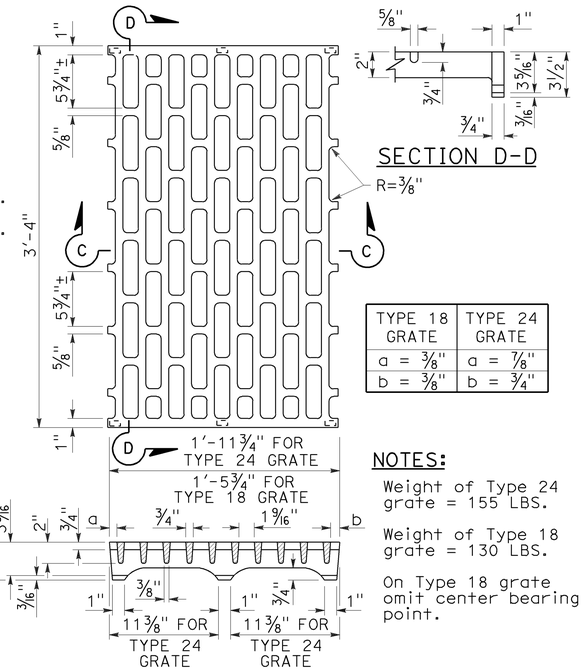

SECTION D-D

TYPE 18 GRATE	TYPE 24 GRATE
a = ⅜"	a = ⅞"
b = ⅜"	b = ¾"

NOTES:

Weight of Type 24 grate = 155 LBS.

Weight of Type 18 grate = 130 LBS.

On Type 18 grate omit center bearing point.

SECTION C-C

TYPE 18-8C AND 24-10C GRATE

(Cast ductile iron)

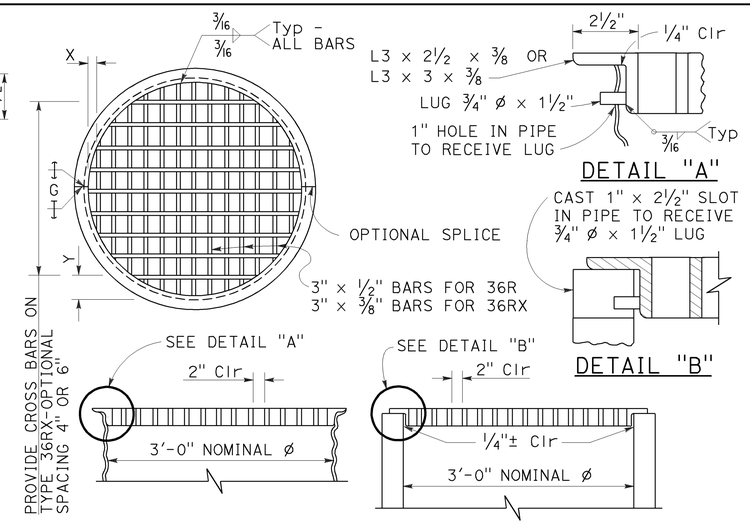

DETAIL "A"

DETAIL "B"

TYPE 36R AND 36RX GRATE DETAILS

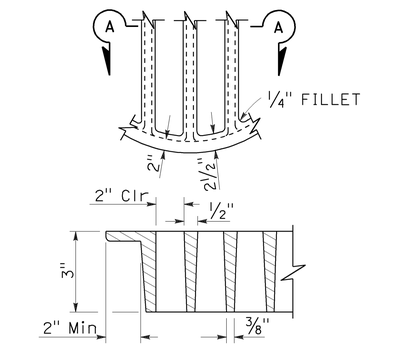

SECTION A-A

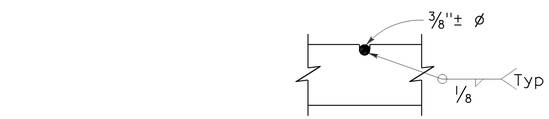

⅜"± ø Cross bars may be fillet welded, resistance welded or electroforged to bearing bars.

CROSS BAR DETAIL TYPE 36RX GRATE (WELDED STEEL)

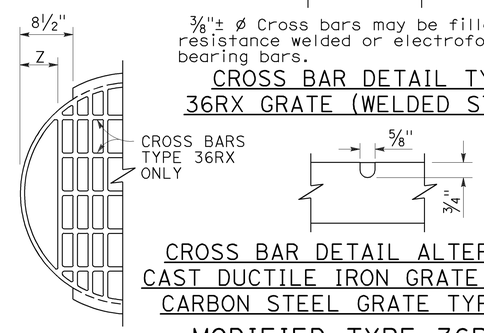

CROSS BAR DETAIL ALTERNATIVE CAST DUCTILE IRON GRATE OR CAST CARBON STEEL GRATE TYPE 36RX

MODIFIED TYPE 36R AND 36RX GRATE FOR ODI INLET

ALTERNATIVE CAST DUCTILE IRON GRATE OR CAST CARBON STEEL GRATE TYPE 36R AND 36RX

BASIS FOR Misc IRON AND STEEL FINAL PAY WEIGHTS FOR DRAINAGE INLETS

INLET TYPE	GRATE TYPE	No. OF GRATES	WEIGHT LB
GDO (SEE NOTE 4)	24-10C	2	391
	24-10S	2	456
	24-12X	2	473
	24-13	2	374
GO,GOL,G1,G2, G3,G4 (TYPE 24)	24-10C	1	202
	24-10S	1	229
	24-12X	1	239
	24-13	1	188
G4 (TYPE 18) G5,G6	18-8S	1	187
	18-9X	1	187
	18-10	1	149
GT1,GT2	18-8S	2	374
	18-9X	2	374
	18-10	2	298
GT3,GT4	24-10C	2	404
	24-10S	2	458
	24-12X	2	478
	24-13	2	376
ODI	36RX (Mod)	1	196
GMP,GCP,GCPI	36RX	1	215
ODI	36R (Mod)	1	220
GMP,GCP,GCPI	36R	1	236
TRASH RACK			22
GRATE CHAIN			3

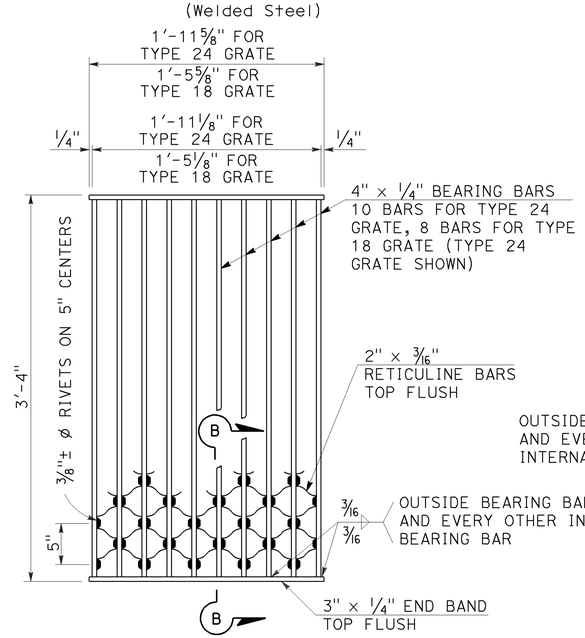

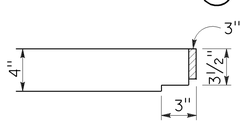

SECTION B-B

NOTES:

Weight of Type 24 grate = 182 LBS.
Weight of Type 18 grate = 145 LBS.

TYPE 18-8S AND 24-10S GRATE

(Welded Steel) Reticuline type

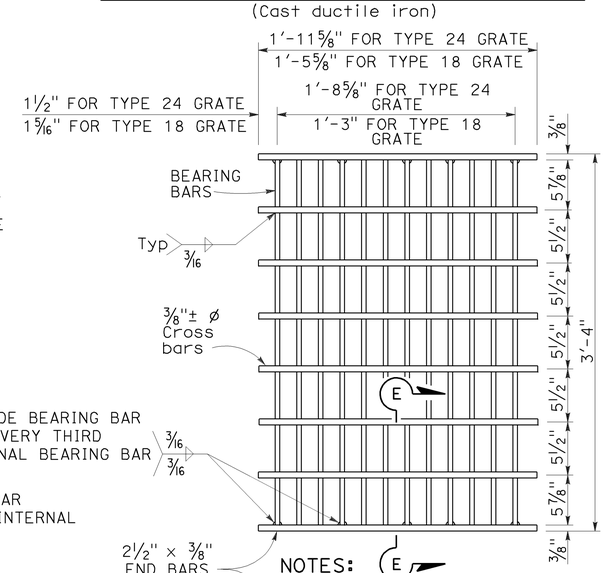

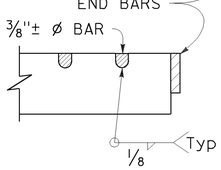

SECTION E-E

NOTES:

Bearing bars to be 3½" × ⅜" bars on 1⅞" centers.

12 Bars for Type 24 grate - 9 bars for Type 18 grates. (Type 24 grate shown).

Weight of Type 24 grate = 192 LBS.

Weight of Type 18 grate = 145 LBS.

⅜"± ø Cross bars may be fillet welded, resistance welded or electroforged to bearing bars.

TYPE 18-9X AND 24-12X GRATE

(Welded Steel)

NOTES:

1. When alternative grates are allowed - Final pay based on alternative with the lesser weight.
2. Use frame shown on Standard Plan D74A, D74B or RSP D77A as appropriate.
3. When Type 24-10S, 24-12X or 24-13 grates are used with GDO Inlets, a ¼" × 3½" × 3'-4⅞" steel bar shall be welded across the center of inlet frame to separate the individual grates.
4. See Revised Standard Plan RSP D77A for connecting chain to welded grate and frame. When chain is required, do not use cast ductile iron grate.

GRATE BAR SPACING TABLE

TYPE	No. OF BARS	CLEAR BAR SPACING	X	Y 4" SPACING	Y 6" SPACING	Z
36R	13	2"	2⅛"	-	-	-
36RX (STEEL)	15	2"	9/16"	3¾"	5¾"	-
36RX (CAST)	13	2"	2⅛"	3¾"	5¾"	-
36R Mod	12	2"	2⅛"	-	-	5"
36RX Mod (STEEL)	13	2"	9/16"	3¾"	5¾"	5 11/16"
36RX Mod (CAST)	12	2"	2⅛"	3¾"	5¾"	5"

STATE OF CALIFORNIA
DEPARTMENT OF TRANSPORTATION

GRATE DETAILS No. 2

NO SCALE

RSP D77B DATED APRIL 19, 2013 SUPERSEDES RSP D77B DATED JULY 20, 2012 AND STANDARD PLAN D77B DATED MAY 20, 2011 - PAGE 165 OF THE STANDARD PLANS BOOK DATED 2010.

REVISED STANDARD PLAN RSP D77B

4-4-13

Dist	COUNTY	ROUTE	POST MILES TOTAL PROJECT	SHEET No.	TOTAL SHEETS
03	Pla	267	0.0/6.8	54	65

REGISTERED CIVIL ENGINEER

July 19, 2013
PLANS APPROVAL DATE

REGISTERED PROFESSIONAL ENGINEER
Gurinderpal Bhullar
No. C48815
Exp. 9-30-14
CIVIL
STATE OF CALIFORNIA

THE STATE OF CALIFORNIA OR ITS OFFICERS OR AGENTS SHALL NOT BE RESPONSIBLE FOR THE ACCURACY OR COMPLETENESS OF SCANNED COPIES OF THIS PLAN SHEET.

TO ACCOMPANY PLANS DATED 5-12-14

TABLE 1

TAPER LENGTH CRITERIA AND CHANNELIZING DEVICE SPACING

SPEED (S)	MINIMUM TAPER LENGTH * FOR WIDTH OF OFFSET 12 FEET (W)				MAXIMUM CHANNELIZING DEVICE SPACING		
					X	Y	Z **
	TANGENT 2L	MERGING L	SHIFTING L/2	SHOULDER L/3	TAPER	TANGENT	CONFLICT
mph	ft	ft	ft	ft	ft	ft	ft
20	160	80	40	27	20	40	10
25	250	125	63	42	25	50	12
30	360	180	90	60	30	60	15
35	490	245	123	82	35	70	17
40	640	320	160	107	40	80	20
45	1080	540	270	180	45	90	22
50	1200	600	300	200	50	100	25
55	1320	660	330	220	55	110	27
60	1440	720	360	240	60	120	30
65	1560	780	390	260	65	130	32
70	1680	840	420	280	70	140	35

* - For other offsets, use the following merging taper length formula for L:
For speed of 40 mph or less, $L = WS^2/60$
For speed of 45 mph or more, $L = WS$

Where: L = Taper length in feet
W = Width of offset in feet
S = Posted speed limit, off-peak 85th-percentile speed prior to work starting, or the anticipated operating speed in mph

** - Use for taper and tangent sections where there are no pavement markings or where there is a conflict between existing pavement markings and channelizers (CA).

TABLE 2

LONGITUDINAL BUFFER SPACE AND FLAGGER STATION SPACING

SPEED *	Min D **	DOWNGRADE Min D ***		
		-3%	-6%	-9%
mph	ft	ft	ft	ft
20	115	116	120	126
25	155	158	165	173
30	200	205	215	227
35	250	257	271	287
40	305	315	333	354
45	360	378	400	427
50	425	446	474	507
55	495	520	553	593
60	570	598	638	686
65	645	682	728	785
70	730	771	825	891

* - Speed is posted speed limit, off-peak 85th-percentile speed prior to work starting, or the anticipated operating speed in mph

** - Longitudinal buffer space or flagger station spacing

*** - Use on sustained downgrade steeper than -3 percent and longer than 1 mile.

TABLE 3

ADVANCE WARNING SIGN SPACING

ROAD TYPE	DISTANCE BETWEEN SIGNS *		
	A	B	C
	ft	ft	ft
URBAN - 25 mph OR LESS	100	100	100
URBAN - MORE THAN 25 mph TO 40 mph	250	250	250
URBAN - MORE THAN 40 mph	350	350	350
RURAL	500	500	500
EXPRESSWAY / FREEWAY	1000	1500	2640

* - The distances are approximate, are intended for guidance purposes only, and should be applied with engineering judgment. These distances should be adjusted by the Engineer for field conditions, if necessary, by increasing or decreasing the recommmended distances.

STATE OF CALIFORNIA
DEPARTMENT OF TRANSPORTATION

TRAFFIC CONTROL SYSTEM TABLES FOR LANE AND RAMP CLOSURES

NO SCALE

RSP T9 DATED JULY 19, 2013 SUPERSEDES RSP T9 DATED APRIL 19, 2013 THAT SUPPLEMENTS THE STANDARD PLANS BOOK DATED 2010.

REVISED STANDARD PLAN RSP T9

2010 REVISED STANDARD PLAN RSP T9

4-30-13

Dist	COUNTY	ROUTE	POST MILES TOTAL PROJECT	SHEET No.	TOTAL SHEETS
03	Pla	267	0.0/6.8	55	65

REGISTERED CIVIL ENGINEER

April 19, 2013
PLANS APPROVAL DATE

REGISTERED PROFESSIONAL ENGINEER Gurinderpal Bhullar No. C48815 Exp. 9-30-14 CIVIL STATE OF CALIFORNIA

THE STATE OF CALIFORNIA OR ITS OFFICERS OR AGENTS SHALL NOT BE RESPONSIBLE FOR THE ACCURACY OR COMPLETENESS OF SCANNED COPIES OF THIS PLAN SHEET.

TO ACCOMPANY PLANS DATED 5-12-14

NOTES:

See Revised Standard Plan RSP T9 for tables.

Use cone spacing X for taper segment, Y for tangent segment or Z for conflict situations, as approriate, per Table 1, unless X, Y, or Z cone spacing is shown on this sheet.

Unless otherwise specified in the special provisions, all temporary warning signs shall have black legend on fluorescent orange background.

California codes are designated by (CA). Otherwise, Federal (MUTCD) codes are shown.

TYPICAL LANE CLOSURE WITH REVERSIBLE CONTROL

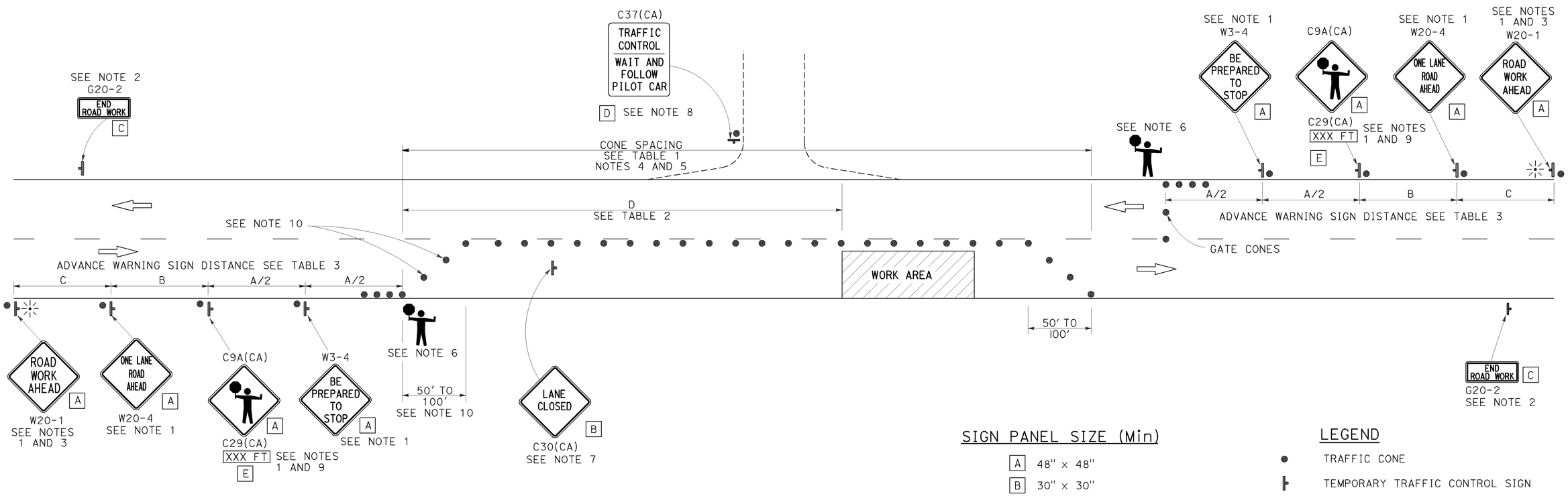

SIGN PANEL SIZE (Min)

A	48" × 48"
B	30" × 30"
C	36" × 18"
D	36" × 42"
E	20" × 7"

LEGEND

- TRAFFIC CONE
- TEMPORARY TRAFFIC CONTROL SIGN
- PORTABLE FLASHING BEACON
- FLAGGER

NOTES:

1. Each advance warning sign in each direction of travel shall be equipped with at least two flags for daytime closure. Each flag shall be at least 16" x 16" in size and shall be orange or fluorescent red-orange in color. Flashing beacons shall be placed at the locations indicated for lane closure during hours of darkness.
2. A G20-2 "END ROAD WORK" sign, as appropriate, shall be placed at the end of the lane control unless the end of work area is obvious, or ends within a larger project's limits.
3. If the W20-1 sign would follow within 2000' of a stationary W20-1 or G20-1 "ROAD WORK NEXT _____ MILES", use a W20-4 sign for the first advance warning sign.
4. All cones used for lane closures during the hours of darkness shall be fitted with retroreflective bands (or sleeves) as specified in the specifications.
5. Portable delineators, placed at one-half the spacing indicated for traffic cones, may be used instead of cones for daytime closures only.
6. Additional advance flaggers may be required. Flagger should stand in a conspicuous place, be visible to approaching traffic as well as approaching vehicles after the first vehicle has stopped. During the hours of darkness, the flagging-station and flagger shall be illuminated and clearly visible to approaching traffic. The illumination footprint of the lighting on the ground shall be at least 20' in diameter. Place a minimum of four cones at 50' intervals in advance of flagger station as shown.
7. Place C30(CA) "LANE CLOSED" sign at 500' to 1000' intervals throughout extended work areas. They are optional if the work area is visible from the flagger station.
8. When a pilot car is used, place a C37(CA) "TRAFFIC CONTROL-WAIT AND FOLLOW PILOT CAR" sign with black legend on white background at all intersections, driveways and alleys without a flagger within traffic control area. Signs shall be clean and visible at all times. Where traffic can not be effectively self-regulated, at least one flagger shall be used at each intersection within traffic control area.
9. An optional C29(CA) sign may be placed below the C9A(CA) sign.
10. Either traffic cones or barricades shall be placed on the taper. Barricades shall be Type I, II, or III.

STATE OF CALIFORNIA
DEPARTMENT OF TRANSPORTATION

TRAFFIC CONTROL SYSTEM FOR LANE CLOSURE ON TWO LANE CONVENTIONAL HIGHWAYS

NO SCALE

RSP T13 DATED APRIL 19, 2013 SUPERSEDES STANDARD PLAN T13 DATED MAY 20, 2011 - PAGE 241 OF THE STANDARD PLANS BOOK DATED 2010.

REVISED STANDARD PLAN RSP T13

2010 REVISED STANDARD PLAN RSP T13

4-2-13

Dist	COUNTY	ROUTE	POST MILES TOTAL PROJECT	SHEET No.	TOTAL SHEETS
03	Pla	267	0.0/6.8	56	65

REGISTERED CIVIL ENGINEER

April 19, 2013
PLANS APPROVAL DATE

REGISTERED PROFESSIONAL ENGINEER Gurinderpal Bhullar No. C48815 Exp. 9-30-14 CIVIL STATE OF CALIFORNIA

THE STATE OF CALIFORNIA OR ITS OFFICERS OR AGENTS SHALL NOT BE RESPONSIBLE FOR THE ACCURACY OR COMPLETENESS OF SCANNED COPIES OF THIS PLAN SHEET.

TO ACCOMPANY PLANS DATED 5-12-14

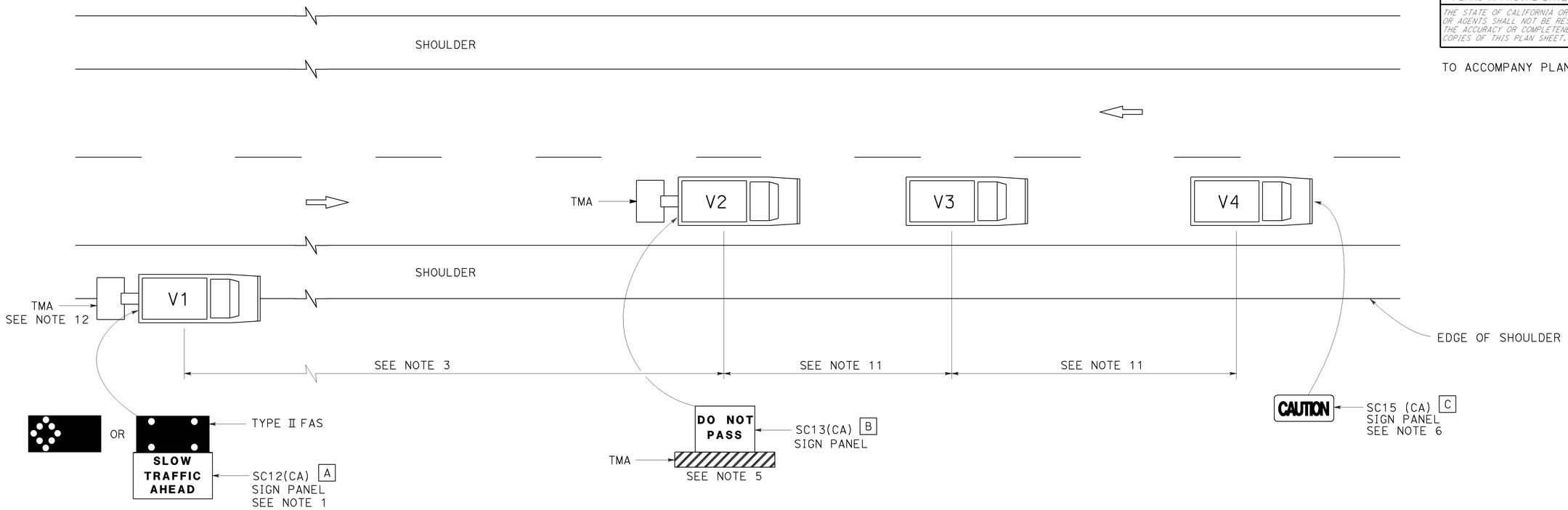

LEGEND

V1	SIGN VEHICLE
V2	SHADOW VEHICLE
V3	WORK/APPLICATION VEHICLE
V4	SIGN VEHICLE
TMA	TRUCK-MOUNTED ATTENUATOR
	FLASHING ARROW SIGN (FAS) IN FLASHING CAUTION MODE
	FLASHING ARROW SIGN (FAS) IN ALTERNATING DIAMOND CAUTION

SIGN PANEL SIZE (Min)

A	72" x 42"
B	54" x 42"
C	54" x 24"

NOTES:

1. Either a changeable message sign or a SC12(CA) "SLOW TRAFFIC AHEAD" sign shall be mounted on the rear of sign vehicle V1. The changeable message sign shall be sequenced to show the "CAUTION" message first, follow by the "SLOW TRAFFIC AHEAD" message. A Type II flashing arrow sign may be used with the SC12(CA) sign panel.
2. Sign vehicle V1 should be positioned where highly visible when shoulders are not available.
3. If traffic queues develop, sign vehicle V1 should be positioned upstream from the end of queue.
4. Vehicle-mounted sign panels shall have Type III or above retroreflective sheeting, black on white, or black on fluorescent orange, with 6" minimum series D letters per Caltrans sign specifications.
5. Shadow vehicle shall be equipped with a truck-mounted attenuator. The sign panel shown shall be mounted on the rear of shadow vehicle V2. The message "LANE CLOSED" may be used in place of the "DO NOT PASS" message.
6. The sign panel shown shall be mounted on the front of sign vehicle V4, facing opposing traffic.
7. All vehicles shall be equipped with flashing or rotating amber lights.
8. Sign vehicle V4 will not be required when the work and vehicles V2 and V3 are 2′ or more from the centerline of the highway during the work or application operations.
9. All vehicles used for lane closures shall be equipped with two-way radios and the vehicle operators shall maintain communication during the work or application operation.
10. This plan shall not be used where workers would be on foot in the work area. Use a stationary type lane closure (Revised Standard Plan T13) for this condition.
11. Minimize spacing between vehicles V2 and V3 and vehicles V3 and V4 to deter road users from driving in between them.
12. If sign vehicle V1 encroaches into the traffic lane due to insufficient shoulder width, sign vehicle V1 shall be equipped with a truck-mounted attenuator. Sign vehicle V1 shall stay as close to the edge of shoulder as practicable.

STATE OF CALIFORNIA
DEPARTMENT OF TRANSPORTATION

TRAFFIC CONTROL SYSTEM FOR MOVING LANE CLOSURE ON TWO LANE HIGHWAYS

NO SCALE

RSP T17 DATED APRIL 19, 2013 SUPERSEDES STANDARD PLAN T17
DATED MAY 20, 2011 - PAGE 245 OF THE STANDARD PLANS BOOK DATED 2010.

REVISED STANDARD PLAN RSP T17

2010 REVISED STANDARD PLAN RSP T17

12-18-12

Dist	COUNTY	ROUTE	POST MILES TOTAL PROJECT	SHEET No.	TOTAL SHEETS
03	Pla	267	0.0/6.8	57	65

Theresa Gabriel
REGISTERED ELECTRICAL ENGINEER

July 19, 2013
PLANS APPROVAL DATE

REGISTERED PROFESSIONAL ENGINEER
Theresa Aziz Gabriel
No. E15129
Exp. 6-30-14
ELECTRICAL
STATE OF CALIFORNIA

THE STATE OF CALIFORNIA OR ITS OFFICERS OR AGENTS SHALL NOT BE RESPONSIBLE FOR THE ACCURACY OR COMPLETENESS OF SCANNED COPIES OF THIS PLAN SHEET.

TO ACCOMPANY PLANS DATED 5-12-14

LEGEND:

AB	ABANDON. IF APPLIED TO CONDUIT, REMOVE CONDUCTORS
BC	INSTALL PULL BOX IN EXISTING CONDUIT RUN
BP	PEDESTRIAN BARRICADE, TYPE AS INDICATED ON PLAN
CB	INSTALL CONDUIT INTO EXISTING PULL BOX
CC	CONNECT NEW AND EXISTING CONDUIT. REMOVE EXISTING CONDUCTORS AND INSTALL CONDUCTORS AS INDICATED
CF	CONDUIT TO REMAIN FOR FUTURE USE. REMOVE CONDUCTORS. INSTALL PULL TAPE
DH	DETECTOR HANDHOLE
FA	FOUNDATION TO BE ABANDONED
IS	INSTALL SIGN ON SIGNAL MAST ARM
NS	NO SLIP BASE ON STANDARD
PEC	PHOTOELECTRIC CONTROL
PEU	PHOTOELECTRIC UNIT
RC	EQUIPMENT OR MATERIAL TO BE REMOVED AND BECOME THE PROPERTY OF THE CONTRACTOR
RE	REMOVE ELECTROLIER, FUSES AND BALLAST. TAPE ENDS OF CONDUCTORS
RL	RELOCATE EQUIPMENT
RR	REMOVE AND REUSE EQUIPMENT
RS	REMOVE AND SALVAGE EQUIPMENT
SC	SPLICE NEW TO EXISTING CONDUCTORS
SD	SERVICE DISCONNECT
TSP	TELEPHONE SERVICE POINT

ABBREVIATIONS

APS	ACCESSIBLE PEDESTRIAN SIGNAL
BBS	BATTERY BACKUP SYSTEM
BC	BOLT CIRCLE
BPB	BICYCLE PUSH BUTTON
C	CONDUIT
CB	CIRCUIT BREAKER
CCTV	CLOSED CIRCUIT TELEVISION
Ckt	CIRCUIT
CMS	CHANGEABLE MESSAGE SIGN
Ctid	CALTRANS IDENTIFICATION
Comm	COMMUNICATION
DLC	LOOP DETECTOR LEAD-IN CABLE
EMS	EXTINGUISHABLE MESSAGE SIGN
EVUC	EMERGENCY VEHICLE UNIT CABLE
EVUD	EMERGENCY VEHICLE UNIT DETECTOR
FB	FLASHING BEACON
FBCA	FLASHING BEACON CONTROL ASSEMBLY
FBS	FLASHING BEACON WITH SLIP BASE
FO	FIBER OPTIC
G	EQUIPMENT GROUNDING CONDUCTOR
GB	GROUND BUS
GFCI	GROUND FAULT CIRCUIT INTERRUPTER
HAR	HIGHWAY ADVISORY RADIO
Hex	HEXAGONAL
HPS	HIGH PRESSURE SODIUM
IISNS	INTERNALLY ILLUMINATED STREET NAME SIGN
ISL	INDUCTION SIGN LIGHTING
LED	LIGHT EMITTING DIODE
LMA	LUMINAIRE MAST ARM
LPS	LOW PRESSURE SODIUM
Ltg	LIGHTING
Lum	LUMINAIRE
M	METERED
MAT	MAST ARM MOUNTING TOP ATTACHMENT
MAS	MAST ARM MOUNTING SIDE ATTACHMENT
M/M	MULTIPLE TO MULTIPLE TRANSFORMER
Mtg	MOUNTING
MV	MERCURY VAPOR LIGHTING FIXTURE
MVDS	MICROWAVE VEHICLE DETECTION SYSTEM
N	NEUTRAL (GROUNDED CONDUCTOR)
NB	NEUTRAL BUS
NC	NORMALLY CLOSE
NO	NORMALLY OPEN
P	CIRCUIT BREAKER'S POLE
PB	PULL BOX
PBA	PUSH BUTTON ASSEMBLY
PEC	PHOTOELECTRIC CONTROL
Ped	PEDESTRIAN
PEU	PHOTOELECTRIC UNIT
PT	CONDUIT WITH PULL TAPE
RE	RELOCATED EQUIPMENT
RM	RAMP METERING
RWIS	ROADSIDE WEATHER INFORMATION SYSTEM
SB	SLIP BASE
SIC	SIGNAL INTERCONNECT CABLE
Sig	SIGNAL
SMA	SIGNAL MAST ARM
SNS	STREET NAME SIGN
SP	SERVICE POINT
TDC	TELEPHONE DEMARCATION CABINET
TMS	TRAFFIC MONITORING STATION
TOS	TRAFFIC OPERATIONS SYSTEM
Veh	VEHICLE
VIVDS	VIDEO IMAGE VEHICLE DETECTION SYSTEM
WIM	WEIGH-IN-MOTION
Xfmr	TRANSFORMER

SOFFIT AND WALL MOUNTED LUMINAIRES

PENDANT, 70 W HPS UNLESS OTHERWISE SPECIFIED

FLUSH, 70 W HPS UNLESS OTHERWISE SPECIFIED

WALL SURFACE, 70 W HPS UNLESS OTHERWISE SPECIFIED

EXISTING SOFFIT OR WALL LUMINAIRE TO REMAIN UNMODIFIED

EXISTING SOFFIT OR WALL LUMINAIRE TO BE MODIFIED AS SPECIFIED

NOTE:

Arrow indicates "street side" of luminaire.

COMMONLY USED SYMBOLS FOR UNITED STATES CUSTOMARY UNITS OF MEASUREMENT:

SYMBOL USED	DEFINITIONS
Ω	OHMS
min	MINUTE
s	SECOND
bps	BITS PER SECOND
Bps	BYTES PER SECOND
A	AMPERE
V	VOLT
V(dc)	VOLT (DIRECT CURRENT)
V(ac)	VOLT (ALTERNATING CURRENT)
FC	FOOT - CANDLE
W	WATTS
VA	VOLT-AMPERE
M	MEGA
k	KILO
m	MILLI
μ	MICRO
P	PICO
Hz	HERTZ

MISCELLANEOUS ELECTROLIERS

NEW	EXISTING	
		LUMINAIRE ON WOOD POLE
		NON-STANDARD ELECTROLIER (SEE PROJECT NOTES OR PROJECT PLANS)
		CITY ELECTROLIER
		ELECTROLIER FOUNDATION (FUTURE INSTALLATION)

NOTES:

1. HPS luminaires shall be 310 W HPS when installed on Type 21, 21D, 30, 31 and 32 Standards, unless otherwise specified. HPS luminaires shall be 200 W when installed on other type standards or poles, unless otherwise specified.
2. LED luminaires shall be 235 W when installed on Type 21, 21D, 30, 31 and 32 Standards, unless otherwise specified. LED luminaires shall be 165 W when installed on other type standards or poles, unless otherwise specified.
3. Luminaires shall be the cutoff type, ANSI Type III medium cutoff lighting distribution, unless otherwise specified.

STANDARD ELECTROLIER

NEW	EXISTING	STANDARD TYPE
		15
		15D
		15 STRUCTURE
		15D STRUCTURE
		21
		21D
		21 STRUCTURE
		21D STRUCTURE
		30
		31
		32

STATE OF CALIFORNIA
DEPARTMENT OF TRANSPORTATION

ELECTRICAL SYSTEMS (LEGEND AND ABBREVIATIONS)

NO SCALE

RSP ES-1A DATED JULY 19, 2013 SUPERSEDES STANDARD PLAN ES-1A DATED MAY 20, 2011 - PAGE 425 OF THE STANDARD PLANS BOOK DATED 2010.

REVISED STANDARD PLAN RSP ES-1A

2010 REVISED STANDARD PLAN RSP ES-1A

Dist	COUNTY	ROUTE	POST MILES TOTAL PROJECT	SHEET No.	TOTAL SHEETS
03	Pla	267	0.0/6.8	58	65

Theresa Gabriel
REGISTERED ELECTRICAL ENGINEER

July 19, 2013
PLANS APPROVAL DATE

REGISTERED PROFESSIONAL ENGINEER
Theresa Aziz Gabriel
No. E15129
Exp. 6-30-14
ELECTRICAL
STATE OF CALIFORNIA

THE STATE OF CALIFORNIA OR ITS OFFICERS OR AGENTS SHALL NOT BE RESPONSIBLE FOR THE ACCURACY OR COMPLETENESS OF SCANNED COPIES OF THIS PLAN SHEET.

TO ACCOMPANY PLANS DATED 5-12-14

CONDUIT

NEW	EXISTING	
		LIGHTING CONDUIT, UNLESS OTHERWISE INDICATED OR NOTED
		TRAFFIC SIGNAL CONDUIT
C	c	COMMUNICATION CONDUIT
T	t	TELEPHONE CONDUIT
F	f	FIRE ALARM CONDUIT
FO	fo	FIBER OPTIC CONDUIT
		CONDUIT TERMINATION
R	r	CONDUIT RISER ATTACHED TO THE STRUCTURE OR SERVICE POLE

SERVICE EQUIPMENT

NEW	EXISTING	
OH	oh	OVERHEAD LINES
U	U	WOOD POLE, "U" INDICATES UTILITY OWNED
		POLE GUY WITH ANCHOR
		UTILITY TRANSFORMER - GROUND MOUNTED
III	III	SERVICE EQUIPMENT ENCLOSURE TYPE. DOOR INDICATES FRONT OF ENCLOSURE
T	t	TELEPHONE DEMARCATION CABINET

POLE-MOUNTED SERVICE DESIGNATION

TYPE H SERVICE, 28'-10" — TYPE OF INSTALLATION AND POLE HEIGHT ABOVE GRADE

FLASHING BEACON

NEW	EXISTING	
R	R	FLASHING BEACON (ONE VEHICLE SIGNAL HEAD WITH BACKPLATE AND VISOR) "R" INDICATES RED INDICATION, "Y" INDICATES YELLOW INDICATION
Y Y	Y Y	FLASHING BEACON WITH TYPE 15-FBS STANDARD AND A SIGN.
R R	R R	FLASHING BEACON WITH TYPES 9, 9A OR 9B SIGN UNLESS OTHERWISE SPECIFIED OR INDICATED

SIGNAL EQUIPMENT

NEW	EXISTING	
C	C	PEDESTRIAN SIGNAL HEAD "C" INDICATES COUNTDOWN PEDESTRIAN HEAD
		PUSH BUTTON ASSEMBLY POST
		PEDESTRIAN BARRICADE
		VEHICLE SIGNAL HEAD (WITH BACKPLATE AND 3-SECTIONS: RED, YELLOW AND GREEN)
		VEHICLE SIGNAL HEAD WITH ANGLE VISOR
PV	PV	MODIFICATIONS OF BASIC SYMBOL: "L" INDICATES ALL NON-ARROW SECTIONS LOUVERED "LG" INDICATES LOUVERED GREEN SECTION ONLY "PV" INDICATES ALL 12" SECTIONS PROGRAMMED VISIBILITY "8" INDICATES ALL 8" SECTIONS (ONLY WHEN SPECIFIED)
		VEHICLE SIGNAL HEAD CONSISTING OF RED, YELLOW AND GREEN LEFT ARROW SECTIONS
		VEHICLE SIGNAL HEAD CONSISTING OF RED AND YELLOW SECTIONS WITH AN UP GREEN ARROW SECTION
		VEHICLE SIGNAL HEAD (5 SECTION) CONSISTING OF RED, YELLOW AND GREEN SECTIONS WITH YELLOW AND GREEN RIGHT ARROW SECTIONS
		TYPE 15TS STANDARD WITH VEHICLE SIGNAL HEAD AND LUMINAIRE
		TYPE 21TS STANDARD WITH VEHICLE SIGNAL HEAD AND LUMINAIRE
		STANDARD WITH LUMINAIRE AND SIGNAL MAST ARMS AND ATTACHED VEHICLE SIGNAL HEADS
		TYPE 1 STANDARD WITH ATTACHED VEHICLE SIGNAL HEADS
		STANDARD WITH A SIGNAL MAST ARM, ATTACHED VEHICLE SIGNAL HEADS AND INTERNALLY ILLUMINATED STREET NAME SIGN
		CONTROLLER ASSEMBLY. DOOR INDICATES FRONT OF CABINET

SIGNAL EQUIPMENT Cont

NEW	EXISTING	
		GUARD POST
		TYPE 1 STANDARD WITH RAMP METERING SIGN
		OPTICAL DETECTOR FOR THE EMERGENCY VEHICLE DETECTION SYSTEM

NOTES:

1. All signal sections shall be 12" unless shown otherwise.
2. Signal heads shall be provided with backplates unless shown otherwise.

ILLUMINATED OVERHEAD SIGN

NEW	EXISTING	
		SINGLE POST, SINGLE ILLUMINATED SIGN, BALANCED BUTTERFLY
		SINGLE POST, DOUBLE ILLUMINATED SIGN, BALANCED BUTTERFLY
		SINGLE POST, SINGLE ILLUMINATED SIGN, FULL CANTILEVER
		DOUBLE POST, SINGLE ILLUMINATED SIGN
		SINGLE ILLUMINATED SIGN MOUNTED ON STRUCTURE
		DOUBLE POST, SINGLE ILLUMINATED SIGN WITH ELECTROLIER

STATE OF CALIFORNIA
DEPARTMENT OF TRANSPORTATION

ELECTRICAL SYSTEMS (LEGEND AND ABBREVIATIONS)

NO SCALE

RSP ES-1B DATED JULY 19, 2013 SUPERSEDES STANDARD PLAN ES-1B DATED MAY 20, 2011 - PAGE 426 OF THE STANDARD PLANS BOOK DATED 2010.

REVISED STANDARD PLAN RSP ES-1B

2010 REVISED STANDARD PLAN RSP ES-1B

7-15-13

Dist	COUNTY	ROUTE	POST MILES TOTAL PROJECT	SHEET No.	TOTAL SHEETS
03	Pla	267	0.0/6.8	59	65

Theresa Gabriel
REGISTERED ELECTRICAL ENGINEER

July 19, 2013
PLANS APPROVAL DATE

REGISTERED PROFESSIONAL ENGINEER
Theresa Aziz Gabriel
No. E15129
Exp. 6-30-14
ELECTRICAL
STATE OF CALIFORNIA

THE STATE OF CALIFORNIA OR ITS OFFICERS OR AGENTS SHALL NOT BE RESPONSIBLE FOR THE ACCURACY OR COMPLETENESS OF SCANNED COPIES OF THIS PLAN SHEET.

TO ACCOMPANY PLANS DATED 5-12-14

EQUIPMENT IDENTIFICATION

ILLUMINATED SIGN IDENTIFICATION NUMBER:

SIGN No. 12345
10 ISL SCI 1.0

- SIGN NUMBER - PLACE ON POST OR STRUCTURE
- TRANSFORMER RATING (kVA)
- LIGHTING CONTROL TYPE
- NUMBER AND TYPE OF FIXTURES

DO NOT PLACE ON STANDARD OR STRUCTURE

ELECTROLIER OR EQUIPMENT IDENTIFICATION NUMBER:

12345 - 15'-0"

- MAST ARM LENGTH, IF SHOWN. DO NOT PLACE ON STANDARD OR STRUCTURE
- EQUIPMENT NUMBER - PLACE ON STANDARD OR STRUCTURE. EXISTING EQUIPMENT NUMBERS ARE SHOWN IN PARENTHESIS

CONDUIT AND CONDUCTOR IDENTIFICATION:

1½"C, 2#10, 15#14, 2 DLC, 12P#18

- PAIR
- NUMBER AND SIZE OF CONDUCTORS AND CABLES
- SIZE OF CONDUIT IN INCHES

ø1, ø2, ø2P, etc.	TRAFFIC PHASE IDENTIFICATION FOR SIGNAL FACES, DETECTORS AND PHASE DIAGRAMS
1 2 3	LEGEND NUMBERS
A B C	EQUIPMENT, SIGNAL POLES, INSTALLATION OR ITEMS
1 2 3	CONDUIT RUN NUMBERS

SIGNAL AND LIGHTING STANDARD (TYPICAL DESIGNATION):

19A - 3 - 100

- WIND VELOCITY = 100 mph
- CASE 3 ARM LOADING
- STANDARD TYPE
- STANDARD PLAN SHEET NUMBER
- DETAIL, NUMBER, SECTION, TYPE OR ELEVATION

MISCELLANEOUS EQUIPMENT

NEW	EXISTING	
CMS	cms	CHANGEABLE MESSAGE SIGN
		CLOSED CIRCUIT TELEVISION CAMERA
		HIGHWAY ADVISORY RADIO POLE AND ANTENNA
EMS	ems	EXTINGUISHABLE MESSAGE SIGN
M V	m v	DETECTION DEVICE M = MICROWAVE SENSOR V = VIDEO IMAGE SENSOR

WIRING DIAGRAM LEGEND

- EXTERNAL CONDUCTOR
- CONDUCTOR OR BUS
- TIE POINT
- CONTACTOR COIL
- CONTACTOR, NO CONTACT
- TERMINAL BLOCKS
- CONTACTOR, NC CONTACT
- ENCLOSURE BOND
- GROUNDING ELECTRODE
- CIRCUIT BREAKER
- RECEPTACLE

PULL BOXES

NEW	EXISTING	
		PULL BOX, No. 5 UNLESS OTHERWISE INDICATED OR NOTED
3	9A(21)	PULL BOX, ADDITIONAL DESIGNATIONS OR DESCRIPTIONS

3 No. 3½ PULL BOX
5 No. 5 PULL BOX
6 No. 6 PULL BOX
7 No. 7 (CEILING PULL BOX)
8 No. 8 (PENDANT SOFFIT PULL BOX)
9 No. 9 PULL BOX
9A No. 9A PULL BOX

(C) COMMUNICATIONS PULL BOX
(E) PULL BOX WITH EXTENSION
(S) SPRINKLER CONTROL PULL BOX
(21) ANCHOR BOLTS AND CONDUIT FOR FUTURE INSTALLATION OF TYPE 21 STANDARD
(T) TRAFFIC PULL BOX

VEHICLE DETECTORS

5 J 9 U

- VEHICLE DETECTOR DESIGNATION
- U = UPPER
  L = LOWER
- SLOT NUMBER IN INPUT FILE
- INPUT FILE (I OR J)
- PHASE

NEW	EXISTING	
		TYPE A DETECTOR LOOP. OUTLINE OF SAWCUT SHOWN
		TYPE B DETECTOR LOOP. OUTLINE OF SAWCUT SHOWN
		TYPE C DETECTOR LOOP. OUTLINE OF SAWCUT SHOWN
		TYPE D DETECTOR LOOP. OUTLINE OF SAWCUT SHOWN
		TYPE E DETECTOR LOOP. OUTLINE OF SAWCUT SHOWN
		TYPE Q DETECTOR LOOP. OUTLINE OF SAWCUT SHOWN
		MAGNETIC DETECTOR
DH	dh	DETECTOR HANDHOLE
		MICROWAVE OR VIDEO DETECTION ZONE

STATE OF CALIFORNIA
DEPARTMENT OF TRANSPORTATION

ELECTRICAL SYSTEMS (LEGEND AND ABBREVIATIONS)

NO SCALE

RSP ES-1C DATED JULY 19, 2013 SUPERSEDES STANDARD PLAN ES-1C DATED MAY 20, 2011 - PAGE 427 OF THE STANDARD PLANS BOOK DATED 2010.

REVISED STANDARD PLAN RSP ES-1C

2010 REVISED STANDARD PLAN RSP ES-1C

7-11-13

Dist	COUNTY	ROUTE	POST MILES TOTAL PROJECT	SHEET No.	TOTAL SHEETS
03	Pla	267	0.0/6.8	60	65

Theresa Gabriel
REGISTERED ELECTRICAL ENGINEER

July 19, 2013
PLANS APPROVAL DATE

REGISTERED PROFESSIONAL ENGINEER
Theresa Aziz Gabriel
No. E15129
Exp. 6-30-14
ELECTRICAL
STATE OF CALIFORNIA

THE STATE OF CALIFORNIA OR ITS OFFICERS OR AGENTS SHALL NOT BE RESPONSIBLE FOR THE ACCURACY OR COMPLETENESS OF SCANNED COPIES OF THIS PLAN SHEET.

TO ACCOMPANY PLANS DATED 5-12-14

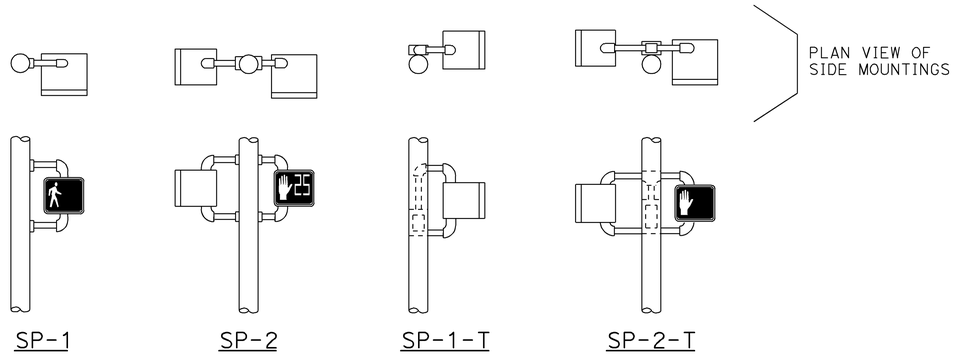

SIDE MOUNTINGS

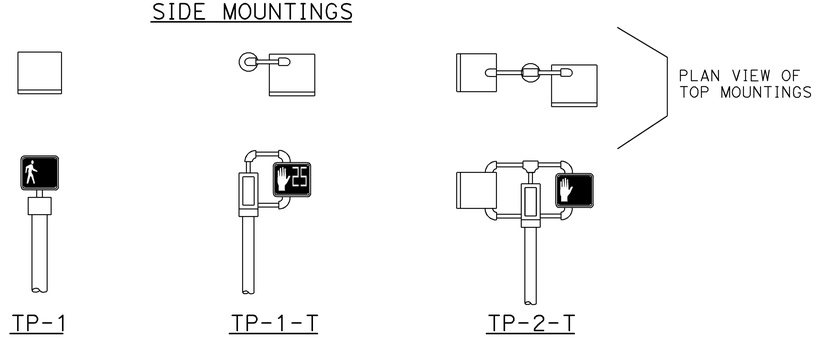

TOP MOUNTINGS

PEDESTRIAN SIGNALS AND MOUNTINGS

DETAIL A

PERSON WALKING INTERVAL FLASHING UPRAISED HAND INTERVAL STEADY UPRAISED HAND INTERVAL

PEDESTRIAN SIGNAL MODULE WITH COUNTDOWN

DETAIL B

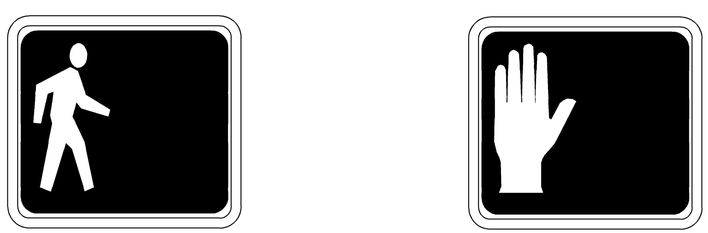

PERSON WALKING INTERVAL STEADY UPRAISED HAND INTERVAL

PEDESTRIAN SIGNAL MODULE WITHOUT COUNTDOWN

DETAIL C

NOTES:

1. Mounting shall be oriented to provide maximum horizontal clearance to adjacent roadway.
2. Bracket arms shall be long enough to permit proper alignment of signals.
3. See Standard Plan ES-4D for attachment fittings details.

ABBREVIATIONS:

1, 2	NUMBER OF SIGNAL FACES
SP	SIDE MOUNTED PEDESTRIAN SIGNAL
T	TERMINAL COMPARTMENT
TP	TOP MOUNTED PEDESTRIAN SIGNAL

RAMP METERING SIGN

DETAIL D

STATE OF CALIFORNIA
DEPARTMENT OF TRANSPORTATION

ELECTRICAL SYSTEMS (PEDESTRIAN SIGNAL AND RAMP METERING SIGN)

NO SCALE

RSP ES-4B DATED JULY 19, 2013 SUPERSEDES STANDARD PLAN ES-4B DATED MAY 20, 2011 - PAGE 444 OF THE STANDARD PLANS BOOK DATED 2010.

REVISED STANDARD PLAN RSP ES-4B

2010 REVISED STANDARD PLAN RSP ES-4B

7-9-13

Dist	COUNTY	ROUTE	POST MILES TOTAL PROJECT	SHEET No.	TOTAL SHEETS
03	Pla	267	0.0/6.8	61	65

Theresa Gabriel
REGISTERED ELECTRICAL ENGINEER

July 19, 2013
PLANS APPROVAL DATE

REGISTERED PROFESSIONAL ENGINEER
Theresa Aziz Gabriel
No. E15129
Exp. 6-30-14
ELECTRICAL
STATE OF CALIFORNIA

THE STATE OF CALIFORNIA OR ITS OFFICERS OR AGENTS SHALL NOT BE RESPONSIBLE FOR THE ACCURACY OR COMPLETENESS OF SCANNED COPIES OF THIS PLAN SHEET.

TO ACCOMPANY PLANS DATED 5-12-14

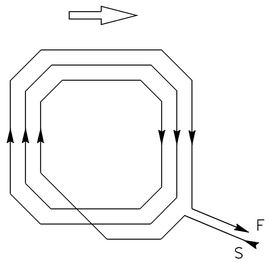

WINDING DETAIL

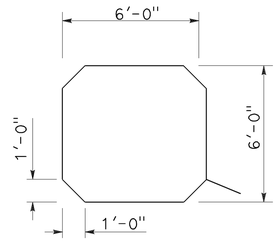

SAWCUT DETAIL

TYPE A LOOP DETECTOR CONFIGURATION

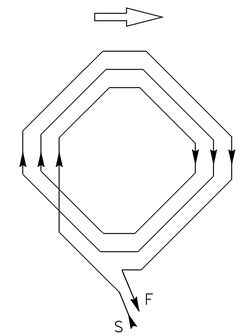

WINDING DETAIL

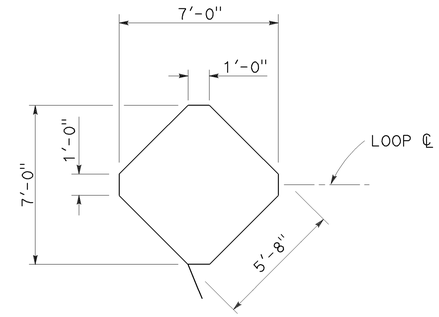

SAWCUT DETAIL

TYPE B LOOP DETECTOR CONFIGURATION

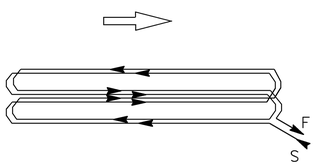

WINDING DETAIL

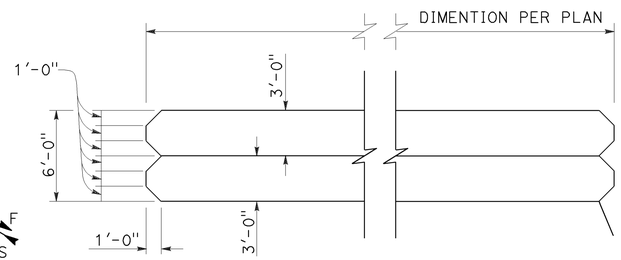

SAWCUT DETAIL

TYPE C LOOP DETECTOR CONFIGURATION

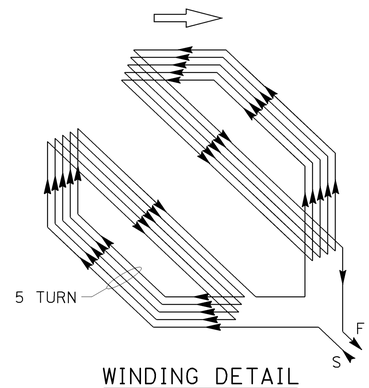

WINDING DETAIL

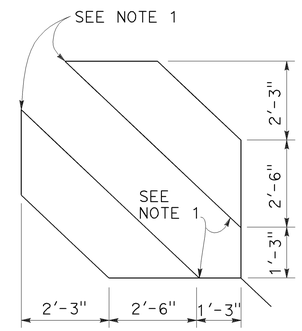

SAWCUT DETAIL

TYPE D LOOP DETECTOR CONFIGURATION

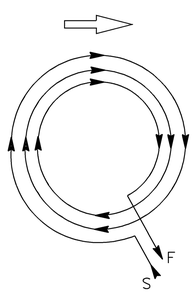

WINDING DETAIL

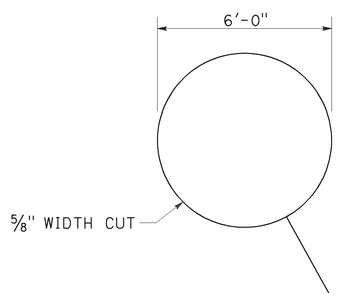

SAWCUT DETAIL

TYPE E LOOP DETECTOR CONFIGURATION

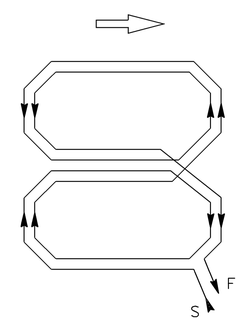

WINDING DETAIL

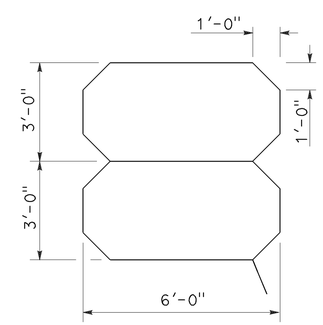

SAWCUT DETAIL

TYPE Q LOOP DETECTOR CONFIGURATION

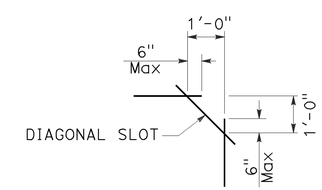

PLAN VIEW OF DIAGONAL SLOT AT CORNERS

NOTES:

1. Round corners of acute angle sawcuts to prevent damage to conductors.
2. Typical distance separating loops from edge to edge is 10' for Type A, B, D and E installation in single lane.

STATE OF CALIFORNIA
DEPARTMENT OF TRANSPORTATION

ELECTRICAL SYSTEMS (DETECTORS)

NO SCALE

RSP ES-5B DATED JULY 19, 2013 SUPERSEDES STANDARD PLAN ES-5B DATED MAY 20, 2011 - PAGE 449 OF THE STANDARD PLANS BOOK DATED 2010.

REVISED STANDARD PLAN RSP ES-5B

2010 REVISED STANDARD PLAN RSP ES-5B

7-9-13

Dist	COUNTY	ROUTE	POST MILES TOTAL PROJECT	SHEET No.	TOTAL SHEETS
03	Pla	267	0.0/6.8	62	65

Theresa Gabriel
REGISTERED ELECTRICAL ENGINEER

July 19, 2013
PLANS APPROVAL DATE

REGISTERED PROFESSIONAL ENGINEER
Theresa Aziz Gabriel
No. E15129
Exp. 6-30-14
ELECTRICAL
STATE OF CALIFORNIA

THE STATE OF CALIFORNIA OR ITS OFFICERS OR AGENTS SHALL NOT BE RESPONSIBLE FOR THE ACCURACY OR COMPLETENESS OF SCANNED COPIES OF THIS PLAN SHEET.

TO ACCOMPANY PLANS DATED 5-12-14

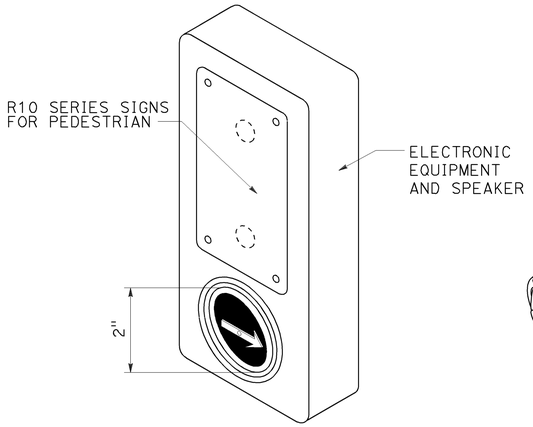

ACCESSIBLE PEDESTRIAN SIGNAL

DETAIL A
(See note 1 to 4)

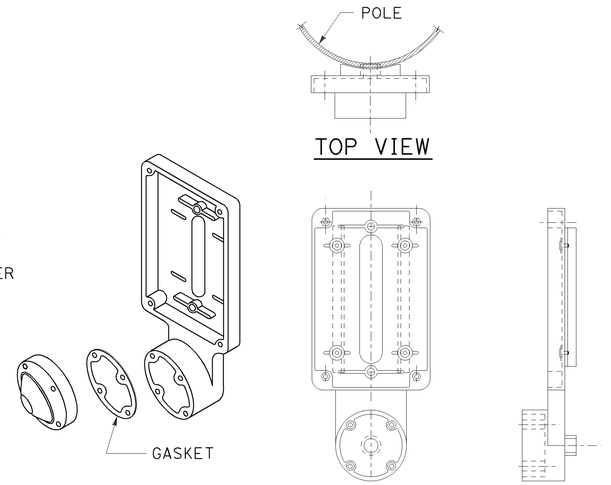

TYPE B PUSH BUTTON ASSEMBLY

DETAIL B
(See note 1 to 4)

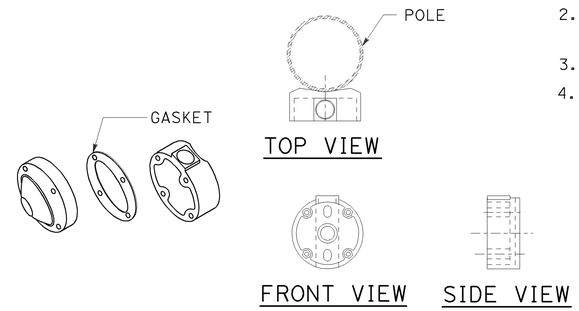

TYPE C PUSH BUTTON ASSEMBLY

DETAIL C
(See note 1 to 4)

NOTES:

1. Back casting shape to fit curvature of pole.
2. Provide cover fitting for top of post, when PBA is mounted on push button assembly post.
3. Install push button on crosswalk side of standard.
4. Use R10 series regulatory signs and plaques for pedestrian and bicycle facilities.

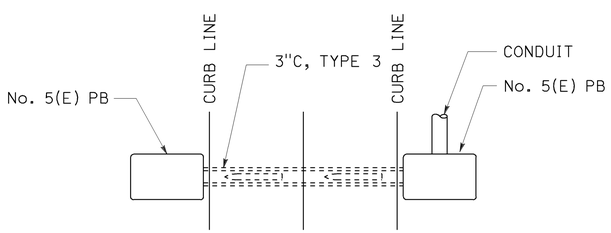

PLAN

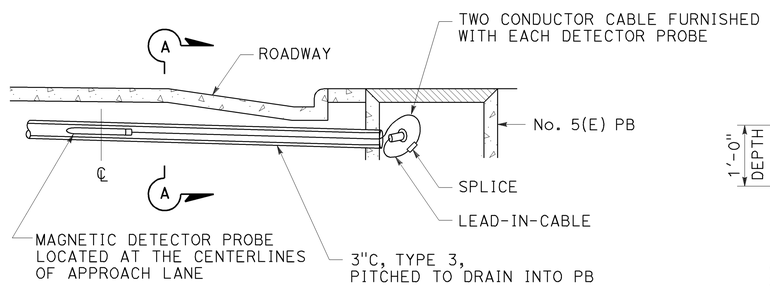

ELEVATION

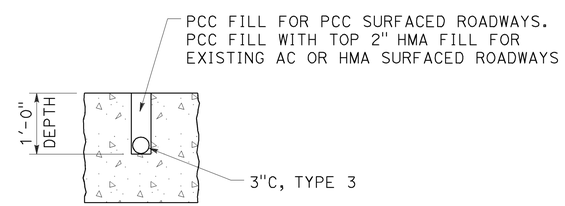

SECTION A-A

MAGNETIC VEHICLE DETECTOR
INSTALLATION DETAILS
DETAIL D

STATE OF CALIFORNIA
DEPARTMENT OF TRANSPORTATION

ELECTRICAL SYSTEMS (ACCESSIBLE PEDESTRIAN SIGNAL, PUSH BUTTON ASSEMBLIES AND MAGNETIC VEHICLE DETECTOR)

NO SCALE

RSP ES-5C DATED JULY 19, 2013 SUPERSEDES STANDARD PLAN ES-5C
DATED MAY 20, 2011 - PAGE 450 OF THE STANDARD PLANS BOOK DATED 2010.

REVISED STANDARD PLAN RSP ES-5C

2010 REVISED STANDARD PLAN RSP ES-5C

7-9-13

Dist	COUNTY	ROUTE	POST MILES TOTAL PROJECT	SHEET No.	TOTAL SHEETS
03	Pla	267	0.0/6.8	63	65

Theresa Gabriel
REGISTERED ELECTRICAL ENGINEER

July 19, 2013
PLANS APPROVAL DATE

REGISTERED PROFESSIONAL ENGINEER
Theresa Aziz Gabriel
No. E15129
Exp. 6-30-14
ELECTRICAL
STATE OF CALIFORNIA

THE STATE OF CALIFORNIA OR ITS OFFICERS OR AGENTS SHALL NOT BE RESPONSIBLE FOR THE ACCURACY OR COMPLETENESS OF SCANNED COPIES OF THIS PLAN SHEET.

TO ACCOMPANY PLANS DATED 5-12-14

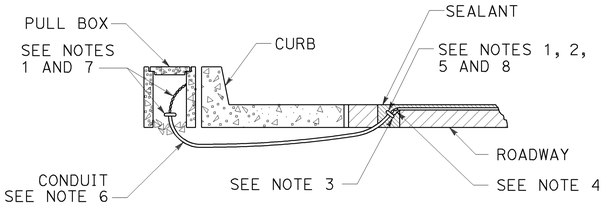

TYPE A
CURB TERMINATION DETAIL

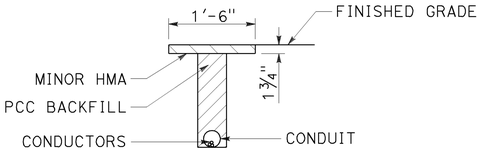

"T" TRENCH
DETAIL T

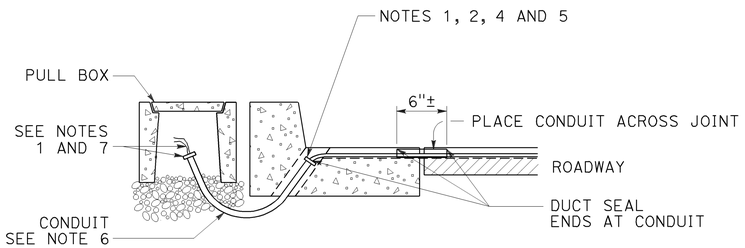

CROSS SECTION

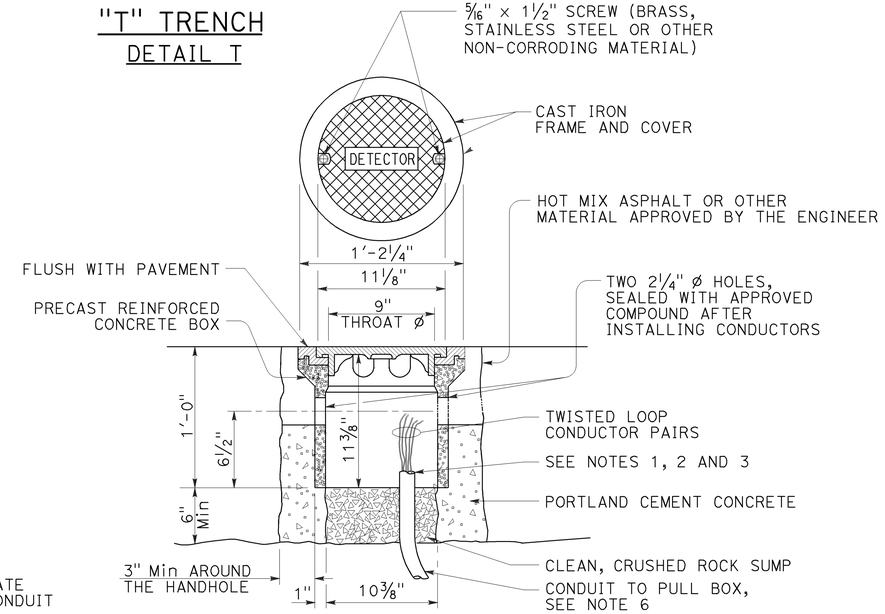

DETECTOR HANDHOLE DETAIL

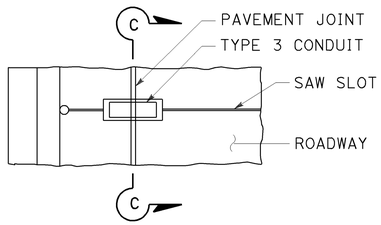

PLAN VIEW

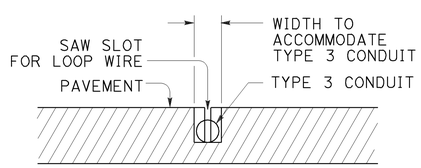

SECTION C-C

TYPE B
CURB TERMINATION DETAIL

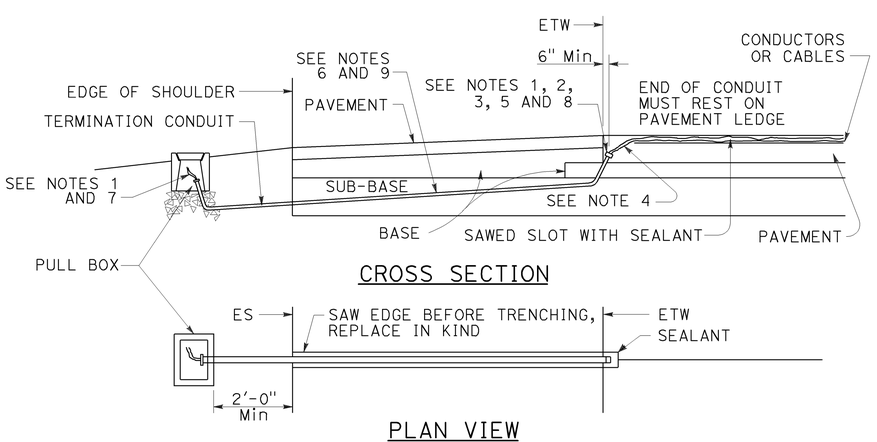

CROSS SECTION

PLAN VIEW

SHOULDER TERMINATION DETAILS

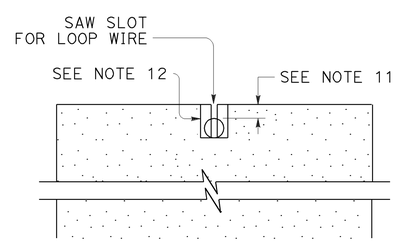

SECTION A-A

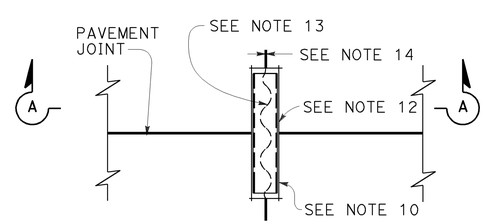

PLAN VIEW

TYPICAL LOOP LEAD-IN DETAIL
AT PAVEMENT JOINT

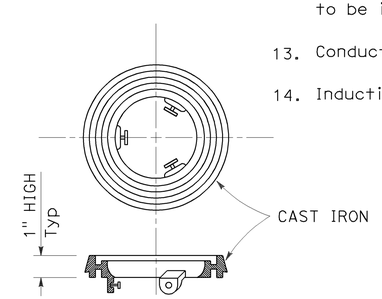

LOCKING GRADE RING

NOTES:

1. Bushing shall be used at end of conduit.
2. Tape detector conductors or cables 3" each side of bushings.
3. Install duct seal compound to each end of termination conduit before installing sealant.
4. Round all sharp edges where detector conductors or cables have to pass.
5. End of conduit shall be 3⅛" below roadway surface.
6. Conduit size / Loop conductors
   - 1"C minimum — 1 to 2 pairs
   - 1½"C minimum — 3 to 4 pairs
   - 2"C minimum — 5 or more pairs
7. Splice detector conductors or cables to detector lead-in-cable.
8. Location of detector handhole when shown on plans.
9. When the shoulder and traveled way are paved with the same material and there is no joint between them, the conduit shall extend only 2'-0" into the shoulder pavement.
10. ¾"C, Type 3 conduit 6" long minimum, plug both ends with duct compound to keep out sealant.
11. ½" Minimum between top of conduit and pavement surface.
12. Sawcut shall not exceed 1" in width and ⅛" longer than conduit to be installed.
13. Conductors with ½" minimum slack inside conduit.
14. Inductive loop detector saw slot.

STATE OF CALIFORNIA
DEPARTMENT OF TRANSPORTATION

ELECTRICAL SYSTEMS (CURB TERMINATION AND HANDHOLE)

NO SCALE

RSP ES-5D DATED JULY 19, 2013 SUPERSEDES STANDARD PLAN ES-5D DATED MAY 20, 2011 - PAGE 451 OF THE STANDARD PLANS BOOK DATED 2010.

REVISED STANDARD PLAN RSP ES-5D

2010 REVISED STANDARD PLAN RSP ES-5D

7-9-13

DIST	COUNTY	ROUTE	POST MILES TOTAL PROJECT	SHEET NO.	TOTAL SHEETS
03	Pla	267	0.0/6.8	64	65

Theresa Gabriel
REGISTERED ELECTRICAL ENGINEER

July 19, 2013
PLANS APPROVAL DATE

REGISTERED PROFESSIONAL ENGINEER Theresa Aziz Gabriel No. E15129 Exp. 6-30-14 ELECTRICAL STATE OF CALIFORNIA

THE STATE OF CALIFORNIA OR ITS OFFICERS OR AGENTS SHALL NOT BE RESPONSIBLE FOR THE ACCURACY OR COMPLETENESS OF SCANNED COPIES OF THIS PLAN SHEET.

TO ACCOMPANY PLANS DATED 5-12-14

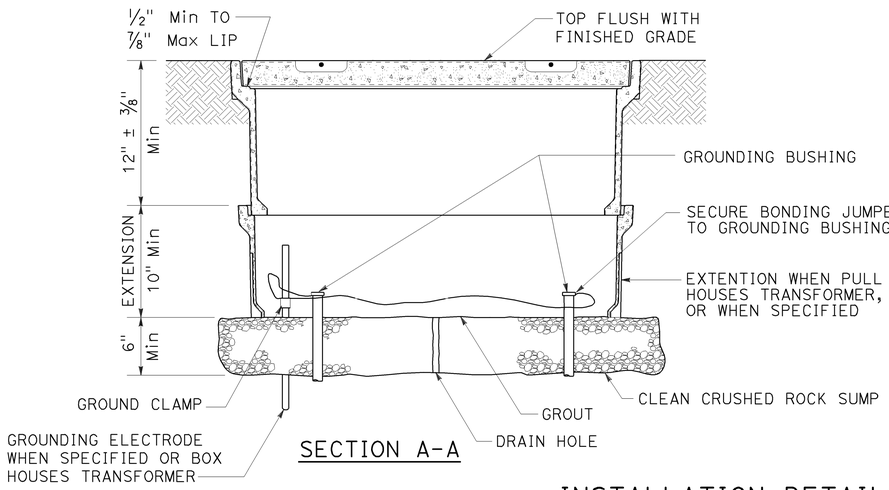

SECTION A-A

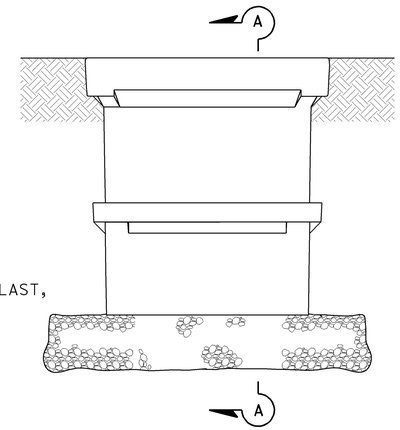

SIDE VIEW

INSTALLATION DETAILS

DETAIL A

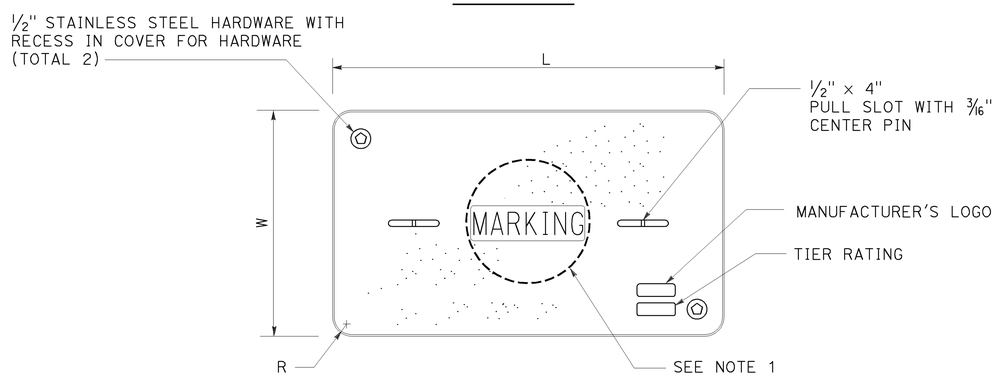

COVER TOP VIEW

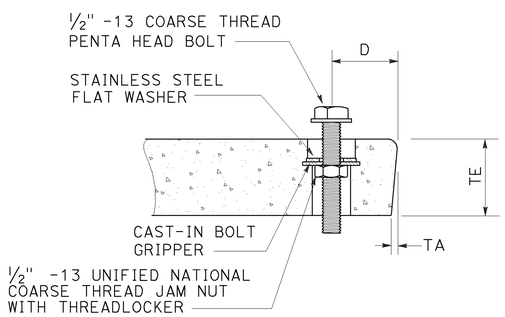

TYPICAL COVER CAPTIVE BOLT

OR SIMILAR

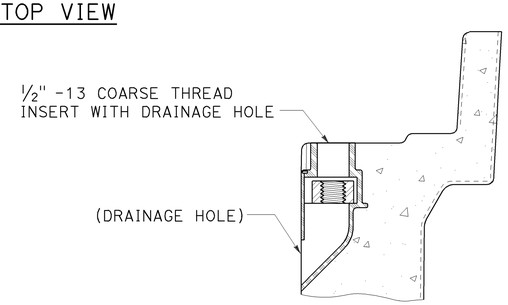

TYPICAL THREADED INSERT

OR SIMILAR

DIMENSION TABLE

PULL BOX	PULL BOX			COVER						
	MINIMUM DEPTH BOX	MINIMUM DEPTH EXTENSION	MAXIMUM WEIGHT	L	W	R	TE	TA	D	MAXIMUM WEIGHT
No. 3½	12"	N/A	40 lb	1′ - 3⅜"	10⅛"	1⅜"	2"	⅛"	1¾"	30 lb
No. 5	12"	10"	55 lb	1′ - 11¼"	1′ - 1¾"	1⅜"	2"	⅛"	1¾"	60 lb
No. 6	12"	10"	70 lb	2′ - 6½"	1′ - 5½"	1⅜"	2"	⅛"	2"	85 lb

NOTES:

1. Pull box covers shall be marked as follows: "SERVICE" Service circuits between service point and service disconnect; "SPRINKLER-CONTROL" sprinkler control circuits, 50 V or less; "CALTRANS" on all pull boxes, except pull boxes marked "SPRINKLER-CONTROL"; and "TELEPHONE" Telephone service;
   - A) No. 3½ pull box.
     - 1) "SIGNAL" - Traffic signal circuits with or without lighting or sign lighting circuits.
     - 2) "LIGHTING" - Lighting or sign lighting circuits where voltage is under 600 V.
   - B) No. 5, 6, 9 or 9A pull box.
     - 1) "TRAFFIC SIGNAL" - Traffic signal circuits with or without lighting or sign lighting circuits.
     - 2) "LIGHTING" - Lighting or sign lighting circuits where voltage is under 600 V.
     - 3) "LIGHTING-HIGH VOLTAGE" - Lighting or sign lighting circuits where voltage is above 600 V.
     - 4) "IRRIGATION" - Circuits to irrigation controller 120 V or more.
     - 5) "RAMP METER" - Ramp meter circuits.
     - 6) "COUNT STATION" - Count or speed monitor circuits.
     - 7) "COMMUNICATIONS" - Communication circuits.
     - 8) "TOS COMMUNICATIONS" - TOS communication line.
     - 9) "TOS POWER" - TOS power.
     - 10) "TDC POWER" - Telephone demarcation cabinet power.
     - 11) "CCTV" - Closed circuit television circuits.
     - 12) "TMS" - Traffic monitoring station circuits.
     - 13) "CMS" - Changeable message sign circuits.
     - 14) "HAR" - Highway advisory radio circuits.
     - 15) "BOOSTER PUMP" - Booster pump circuit.
2. The nominal dimensions of the opening in which the cover sets shall be the same as the cover dimensions except the length and width dimensions shall be ⅛" greater.
3. Covers and boxes shall be interchangeable with California standard male and female gages. When interchanged with a standard male or female gage, the top surfaces shall be flush within ⅛". Top outside radius of covers and pull boxes shall have a ⅛" radius.
4. Pull box extension may be another pull box as long as the bottom edge of the pull box can fit into the cover opening.
5. All dimensions for the cover for non-traffic pull box are nominal values.

STATE OF CALIFORNIA
DEPARTMENT OF TRANSPORTATION

ELECTRICAL SYSTEMS (NON-TRAFFIC PULL BOX)

NO SCALE

RSP ES-8A DATED JULY 19, 2013 SUPERSEDES RSP ES-8A DATED JANUARY 20, 2012 THAT SUPPLEMENTS THE STANDARD PLANS BOOK DATED 2010.

REVISED STANDARD PLAN RSP ES-8A

2010 REVISED STANDARD PLAN RSP ES-8A

7-15-13

DIST	COUNTY	ROUTE	POST MILES TOTAL PROJECT	SHEET NO.	TOTAL SHEETS
03	Pla	267	0.0/6.8	65	65

Theresa Gabriel
REGISTERED ELECTRICAL ENGINEER

July 19, 2013
PLANS APPROVAL DATE

REGISTERED PROFESSIONAL ENGINEER
Theresa Aziz Gabriel
No. E15129
Exp. 6-30-14
ELECTRICAL
STATE OF CALIFORNIA

THE STATE OF CALIFORNIA OR ITS OFFICERS OR AGENTS SHALL NOT BE RESPONSIBLE FOR THE ACCURACY OR COMPLETENESS OF SCANNED COPIES OF THIS PLAN SHEET.

TO ACCOMPANY PLANS DATED 5-12-14

2010 REVISED STANDARD PLAN RSP ES-8B

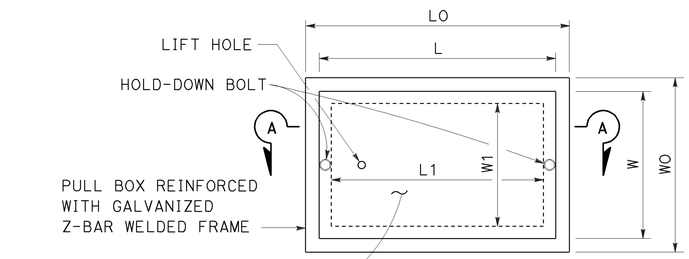

TOP VIEW

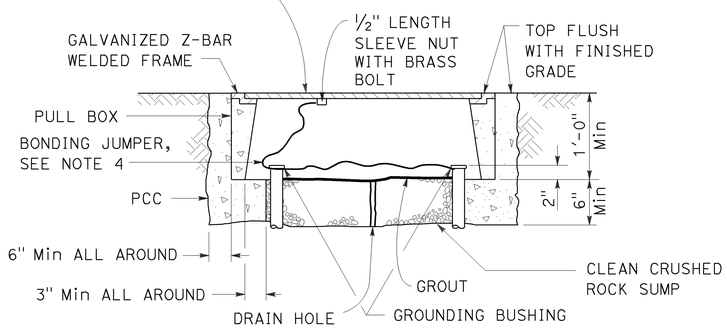

SECTION A-A

No. 3½(T), No. 5(T) AND No. 6(T) TRAFFIC PULL BOX

NOTES:

1. Traffic pull box shall be provided with steel cover and special concrete footing. Steel cover shall have embossed non-skid pattern.
2. Steel reinforcing shall be as regularly used in the standard products of the respective manufacturer.
3. Pull box covers shall be marked as follows: "SERVICE" Service circuits between service point and service disconnect; "SPRINKLER-CONTROL" Sprinkler control circuits, 50 V or less; "CALTRANS" On all pull boxes, except pull boxes marked "SPRINKLER-CONTROL"; and "TELEPHONE" Telephone service.
   - A) No. 3½(T) pull box.
     - 1) "SIGNAL" - Traffic signal circuits with or without lighting or sign lighting circuits.
     - 2) "LIGHTING" - Lighting or sign lighting circuits where voltage is under 600 V.
   - B) No. 5(T) or 6(T) pull box.
     - 1) "TRAFFIC SIGNAL" - Traffic signal circuits with or without lighting or sign lighting circuits.
     - 2) "LIGHTING" - Lighting or sign lighting circuits where voltage is under 600 V.
     - 3) "LIGHTING-HIGH VOLTAGE" - Lighting or sign lighting circuits where voltage is above 600 V.
     - 4) "IRRIGATION" - Circuits to irrigation controller 120 V or more.
     - 5) "RAMP METER" - Ramp meter circuits.
     - 6) "COUNT STATION" - Count or speed monitor circuits.
     - 7) "COMMUNICATION" - Communication circuits.
     - 8) "TOS COMMUNICATIONS" - TOS communications line.
     - 9) "TOS POWER" - TOS power.
     - 10) "TDC POWER" - Telephone demarcation cabinet power.
     - 11) "CCTV" - Closed circuit television circuits.
     - 12) "TMS" - Traffic monitoring station circuits.
     - 13) "CMS" - Changeable message sign circuits.
     - 14) "HAR" - Highway advisory radio circuits.
     - 15) "BOOSTER PUMP" - Booster pump circuit.
4. Bonding jumper for metal covers shall be 3' long, minimum.
5. The nominal dimensions of the opening in which the cover sets shall be the same as the cover dimensions except the length and width dimensions shall be ⅛" greater.
6. Covers and boxes shall be interchangeable with California standard male and female gages. When interchanged with a standard male or female gage, the top surfaces shall be flush within ⅛".

DIMENSION TABLE

PULL BOX	PULL BOX						COVER				
	MINIMUM * THICKNESS	MINIMUM DEPTH BOX AND EXTENSION	WO	LO	L1	W1	L **	W **	R	EDGE THICKNESS	EDGE TAPER
No. 3½(T)	1½"	1'-0"	1'-5"± 1"	1'-8⅞"±	1'-2½"±	10⅝"± 1"	1'-8"±	1'-1¾"±	0"	½"	NONE
No. 5(T)	1¾"	1'-0"	1'-11½"± 1"	2'-5½"±	1'-7"±	1'-1"± 1"	2'-3"±	1'-4"±	0"	½"	NONE
No. 6(T)	2"	1'-0"	2'-6"± 1"	2'-11½"±	1'-11½"±	1'-5"± 1"	2'-9"±	1'-8"±	0"	½"	NONE

* EXCLUDING CONDUIT WEB ** TOP DIMENSION

STATE OF CALIFORNIA
DEPARTMENT OF TRANSPORTATION

ELECTRICAL SYSTEMS (TRAFFIC PULL BOX)

NO SCALE

RSP ES-8B DATED JULY 19, 2013 SUPERSEDES RSP ES-8B DATED JANUARY 20, 2012 THAT SUPPLEMENTS THE STANDARD PLANS BOOK DATED 2010.

REVISED STANDARD PLAN RSP ES-8B

7-15-13