Dist	COUNTY	ROUTE	POST MILES TOTAL PROJECT	SHEET No.	TOTAL SHEETS
03	Pla	80	5.1/14.5	1	59

IM-0803(240)E

STATE OF CALIFORNIA
DEPARTMENT OF TRANSPORTATION

PROJECT PLANS FOR CONSTRUCTION ON
STATE HIGHWAY

IN PLACER COUNTY
1.0 MILE EAST OF ROUTE 65/80 SEPARATION
TO 0.2 MILE EAST OF ROUTE 193/80 SEPARATION

INDEX OF PLANS

SHEET No.	DESCRIPTION
1	TITLE AND LOCATION MAP
2	TYPICAL CROSS SECTIONS
3-16	CONSTRUCTION DETAILS
17	CONSTRUCTION AREA SIGNS
18-19	PAVEMENT DELINEATION QUANTITIES
20-24	SUMMARY OF QUANTITIES
25-26	LANDSCAPE DETAILS
27-30	ELECTRICAL PLANS
31-59	REVISED AND NEW STANDARD PLANS

THE STANDARD PLANS LIST APPLICABLE TO THIS CONTRACT IS INCLUDED IN THE NOTICE TO BIDDERS AND SPECIAL PROVISIONS BOOK.

TO BE SUPPLEMENTED BY STANDARD PLANS DATED MAY 2006

LOCATION MAP

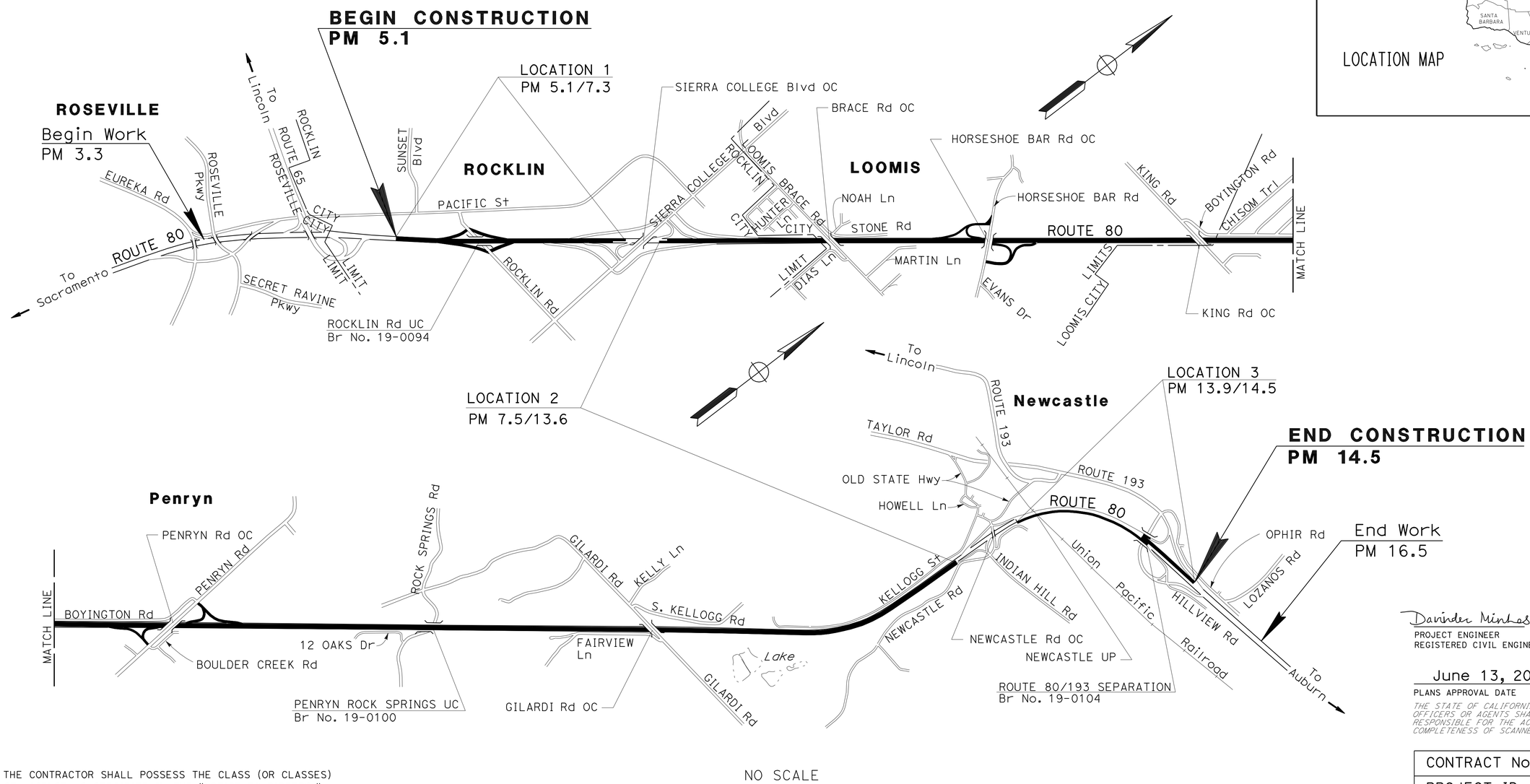

THE CONTRACTOR SHALL POSSESS THE CLASS (OR CLASSES) OF LICENSE AS SPECIFIED IN THE "NOTICE TO BIDDERS."

NO SCALE

Davinder Minhas 6-3-11
PROJECT ENGINEER DATE
REGISTERED CIVIL ENGINEER

June 13, 2011
PLANS APPROVAL DATE

REGISTERED PROFESSIONAL ENGINEER
DAVINDER K MINHAS
No. 70022
Exp. 9-30-12
CIVIL
STATE OF CALIFORNIA

THE STATE OF CALIFORNIA OR ITS OFFICERS OR AGENTS SHALL NOT BE RESPONSIBLE FOR THE ACCURACY OR COMPLETENESS OF SCANNED COPIES OF THIS PLAN SHEET.

CONTRACT No.	03-2F0304
PROJECT ID	0300020444

PROJECT MANAGER SAMUEL JORDAN
DESIGN ENGINEER DEANN SPANGLER

LAST REVISION 6-6-11
DATE PLOTTED => 21-JUN-2011
TIME PLOTTED => 10:55

Dist	COUNTY	ROUTE	POST MILES TOTAL PROJECT	SHEET No.	TOTAL SHEETS
03	Pla	80	5.1/14.5	2	59

Davinder Minhas 6-3-11
REGISTERED CIVIL ENGINEER DATE

6-13-11
PLANS APPROVAL DATE

REGISTERED PROFESSIONAL ENGINEER
DAVINDER K MINHAS
No. 70022
Exp. 9-30-12
CIVIL
STATE OF CALIFORNIA

THE STATE OF CALIFORNIA OR ITS OFFICERS OR AGENTS SHALL NOT BE RESPONSIBLE FOR THE ACCURACY OR COMPLETENESS OF SCANNED COPIES OF THIS PLAN SHEET.

NOTES:

1. DIMENSIONS OF THE PAVEMENT STRUCTURES (STRUCTURAL SECTIONS) ARE SUBJECT TO TOLERANCES SPECIFIED IN THE STANDARD SPECIFICATIONS.
2. FOR METAL BEAM GUARD RAILING, IMPORTED MATERIAL (SHOULDER BACKING), REPLACE AC SURFACING, AND DIKE INFORMATION, SEE SUMMARY OF QUANTITIES SHEETS.
3. EXTEND RHMA-O TO RIGHT EP ON HIGH SIDE OF SUPER.

ABBREVIATIONS:

RHMA-O	RUBBERIZED HOT MIX ASPHALT (OPEN GRADED)
CP	CATCH POINT
ISM	IMPORTED SUBBASE MATERIAL

DESIGN DESIGNATION

ADT (2012)	112,600
ADT (2017)	138,400
DHV	12,000
ESAL	9,925,490
D	62%
T	5%
V	65 mph
TI_5	12

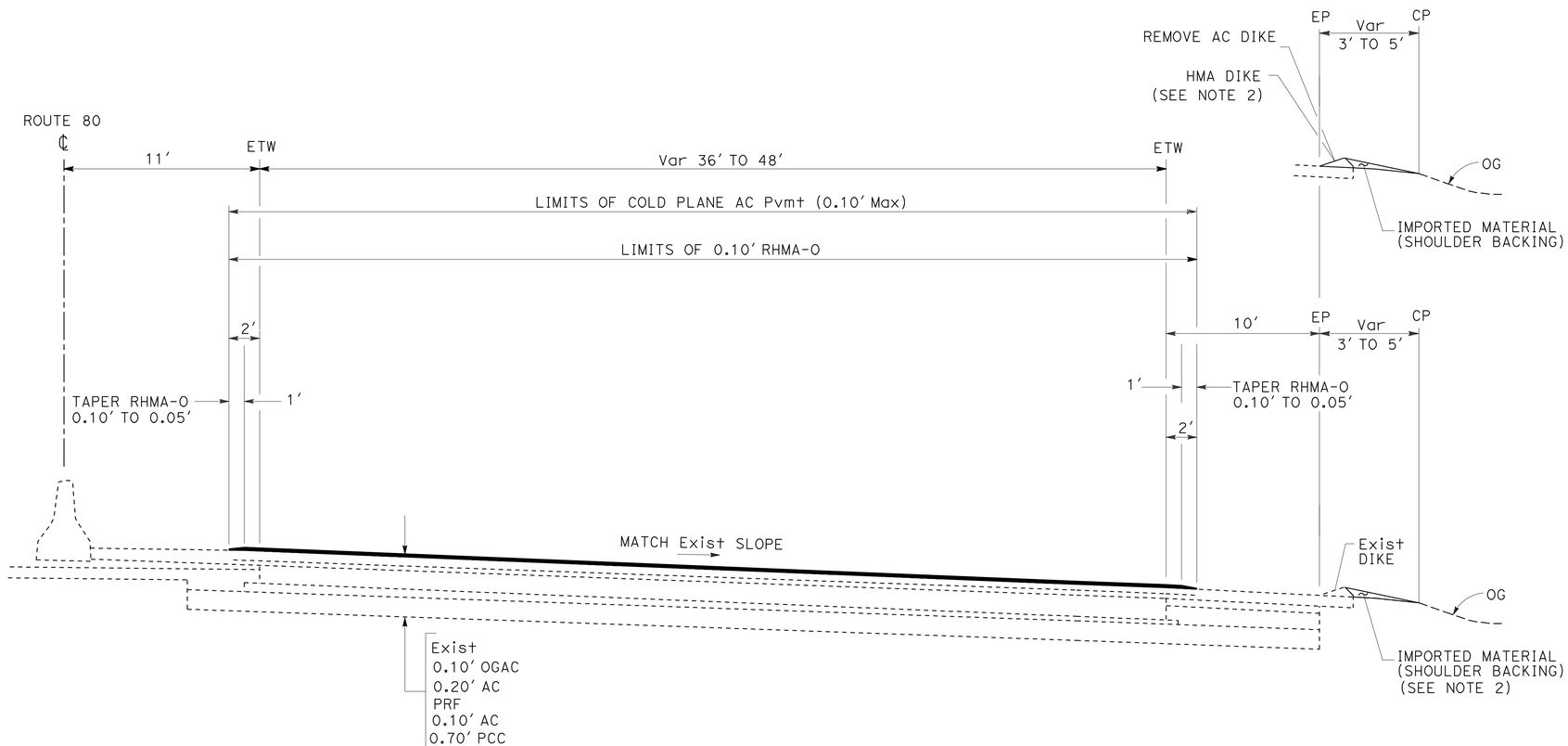

MAINLINE (HALF SECTION)
ROUTE 80

EB PM 5.10 TO 7.23
EB PM 7.52 TO 13.57
EB PM 13.91 TO 14.26
WB PM 5.10 TO 7.32
WB PM 7.61 TO 13.57
WB PM 14.33 TO 14.41

TYPICAL CROSS SECTIONS

NO SCALE

X-1

STATE OF CALIFORNIA - DEPARTMENT OF TRANSPORTATION
Caltrans® DIVISION OF ENGINEERING

FUNCTIONAL SUPERVISOR: DEANN SPANGLER
CALCULATED-DESIGNED BY: DAVINDER MINHAS
CHECKED BY: DAVID MERRIMAN
REVISED BY
DATE REVISED

LAST REVISION 00-00-00
DATE PLOTTED => 14-JUN-2011
TIME PLOTTED => 06:37

Dist	COUNTY	ROUTE	POST MILES TOTAL PROJECT	SHEET No.	TOTAL SHEETS
03	Pla	80	5.1/14.5	3	59

Davinder Minhas 6-3-11
REGISTERED CIVIL ENGINEER DATE

6-13-11
PLANS APPROVAL DATE

REGISTERED PROFESSIONAL ENGINEER
DAVINDER K MINHAS
No. 70022
Exp 9-30-12
CIVIL
STATE OF CALIFORNIA

THE STATE OF CALIFORNIA OR ITS OFFICERS OR AGENTS SHALL NOT BE RESPONSIBLE FOR THE ACCURACY OR COMPLETENESS OF SCANNED COPIES OF THIS PLAN SHEET.

NOTES:

1. EXISTING UTILITY FACILITIES ARE NOT SHOWN ON THESE PLANS.
2. FOR ADDITIONAL COLD PLANE AC Pvmt AND RHMA-O QUANTITIES ALONG THE MAINLINE AND GORE AREAS SEE SHEET Q-1.
3. CONFORM RHMA-O TO CONCRETE GUTTERS AT RAMP TERMINI.
4. THE NOTES, LEGEND, AND ABBREVIATIONS APPLY TO SHEETS C-1 THROUGH C-6.

LEGEND:

- REPLACE AC SURFACING (RAMPS)
- LIMITS OF 0.10' RHMA-O (RAMPS)
- REPLACE AC SURFACING (MAINLINE)
- DIRECTION OF TRAVEL

ABBREVIATIONS:

RHMA-O - RUBBERIZED HOT MIX ASPHALT (OPEN GRADED)
ISM - IMPORTED SUBBASE MATERIAL
ASB - AGGREGATE SUBBASE

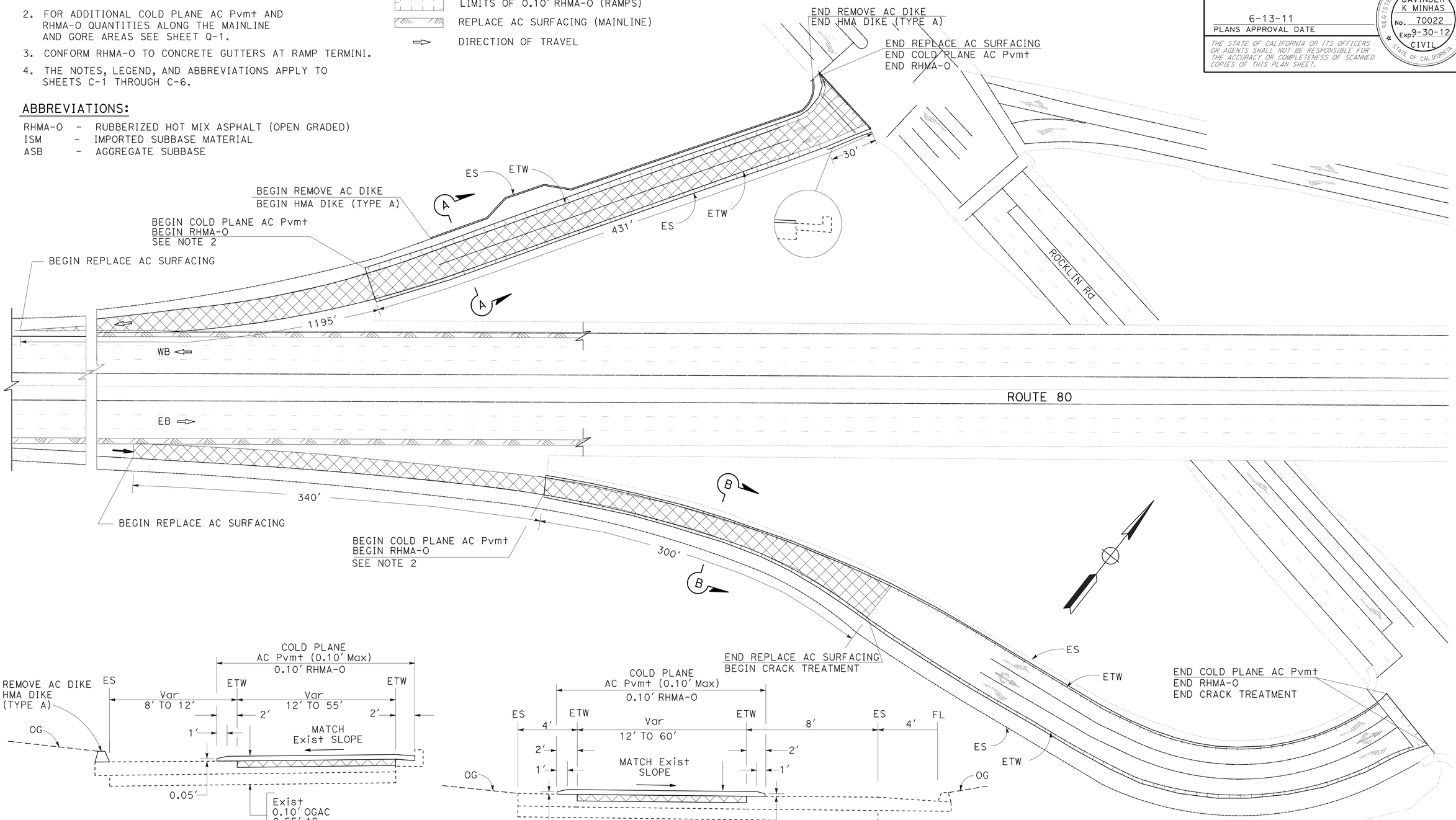

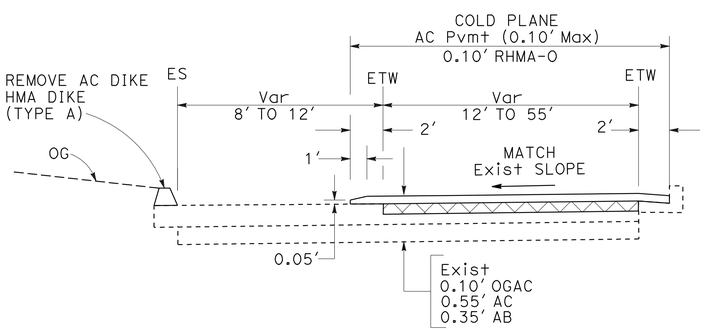

SECTION A-A

SECTION B-B

ROCKLIN Rd
EASTBOUND EXIT RAMP
WESTBOUND ENTRANCE RAMP

CONSTRUCTION DETAILS
NO SCALE

C-1

STATE OF CALIFORNIA - DEPARTMENT OF TRANSPORTATION
Caltrans DIVISION OF ENGINEERING

FUNCTIONAL SUPERVISOR: DEANN SPANGLER
CALCULATED-DESIGNED BY: DAVINDER MINHAS
CHECKED BY: DAVID MERRIMAN
REVISED BY
DATE REVISED

LAST REVISION 6-6-11
DATE PLOTTED => 14-JUN-2011
TIME PLOTTED => 06:37

Dist	COUNTY	ROUTE	POST MILES TOTAL PROJECT	SHEET No.	TOTAL SHEETS
03	Pla	80	5.1/14.5	4	59

Davinder Minhas 6-3-11
REGISTERED CIVIL ENGINEER DATE

6-13-11
PLANS APPROVAL DATE

REGISTERED PROFESSIONAL ENGINEER
DAVINDER K MINHAS
No. 70022
Exp 9-30-12
CIVIL
STATE OF CALIFORNIA

THE STATE OF CALIFORNIA OR ITS OFFICERS OR AGENTS SHALL NOT BE RESPONSIBLE FOR THE ACCURACY OR COMPLETENESS OF SCANNED COPIES OF THIS PLAN SHEET.

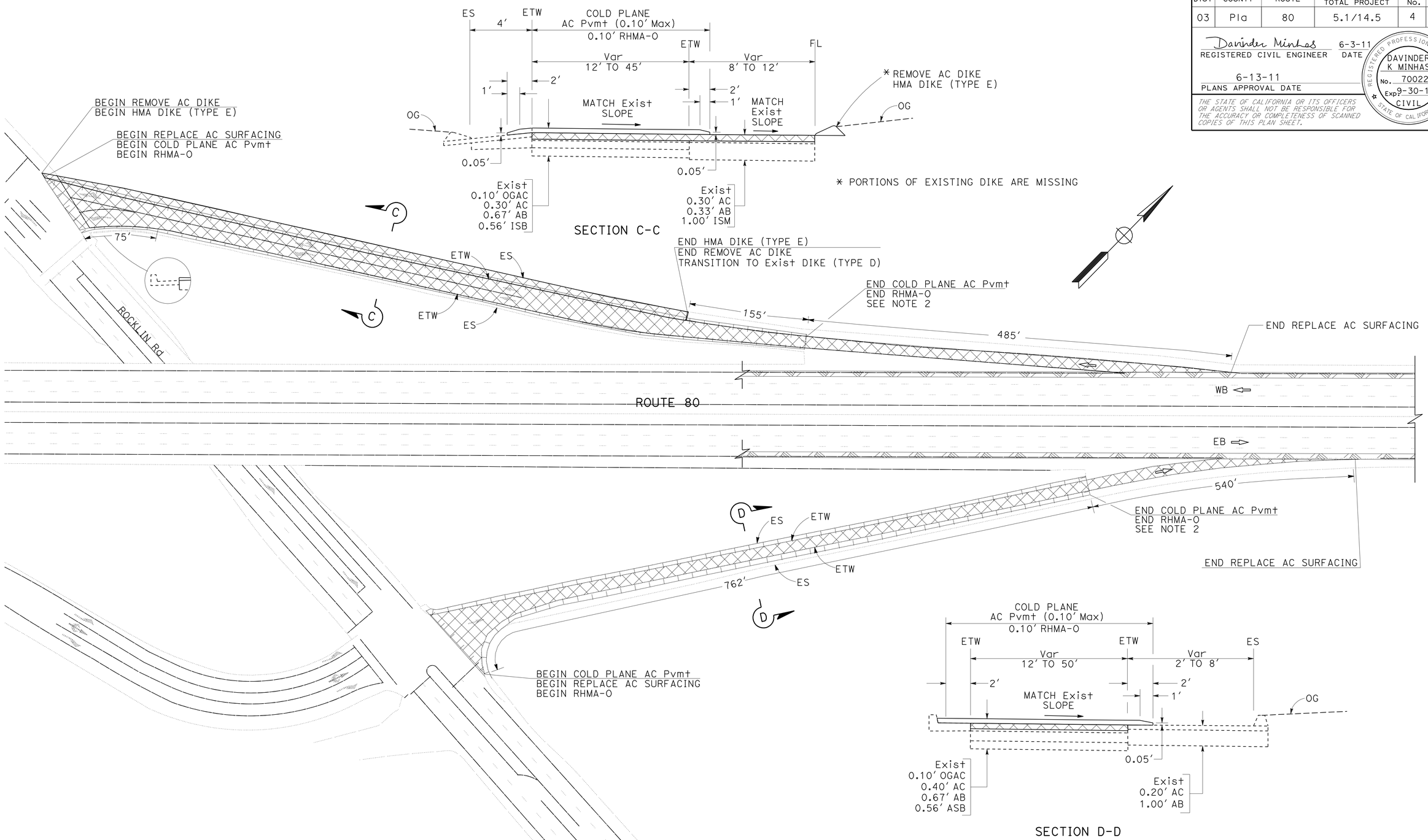

ROCKLIN Rd
EASTBOUND ENTRANCE RAMP
WESTBOUND EXIT RAMP

CONSTRUCTION DETAILS
NO SCALE

C-2

REVISED BY | DATE REVISED
DAVINDER MINHAS | DAVID MERRIMAN
CALCULATED-DESIGNED BY | CHECKED BY
FUNCTIONAL SUPERVISOR
DEANN SPANGLER

STATE OF CALIFORNIA - DEPARTMENT OF TRANSPORTATION
Caltrans® DIVISION OF ENGINEERING

LAST REVISION 6-6-11
DATE PLOTTED => 14-JUN-2011
TIME PLOTTED => 06:37

Dist	COUNTY	ROUTE	POST MILES TOTAL PROJECT	SHEET No.	TOTAL SHEETS
03	Pla	80	5.1/14.5	5	59

Davinder Minhas 6-3-11
REGISTERED CIVIL ENGINEER DATE

6-13-11
PLANS APPROVAL DATE

REGISTERED PROFESSIONAL ENGINEER
DAVINDER K MINHAS
No. 70022
Exp 9-30-12
CIVIL
STATE OF CALIFORNIA

THE STATE OF CALIFORNIA OR ITS OFFICERS OR AGENTS SHALL NOT BE RESPONSIBLE FOR THE ACCURACY OR COMPLETENESS OF SCANNED COPIES OF THIS PLAN SHEET.

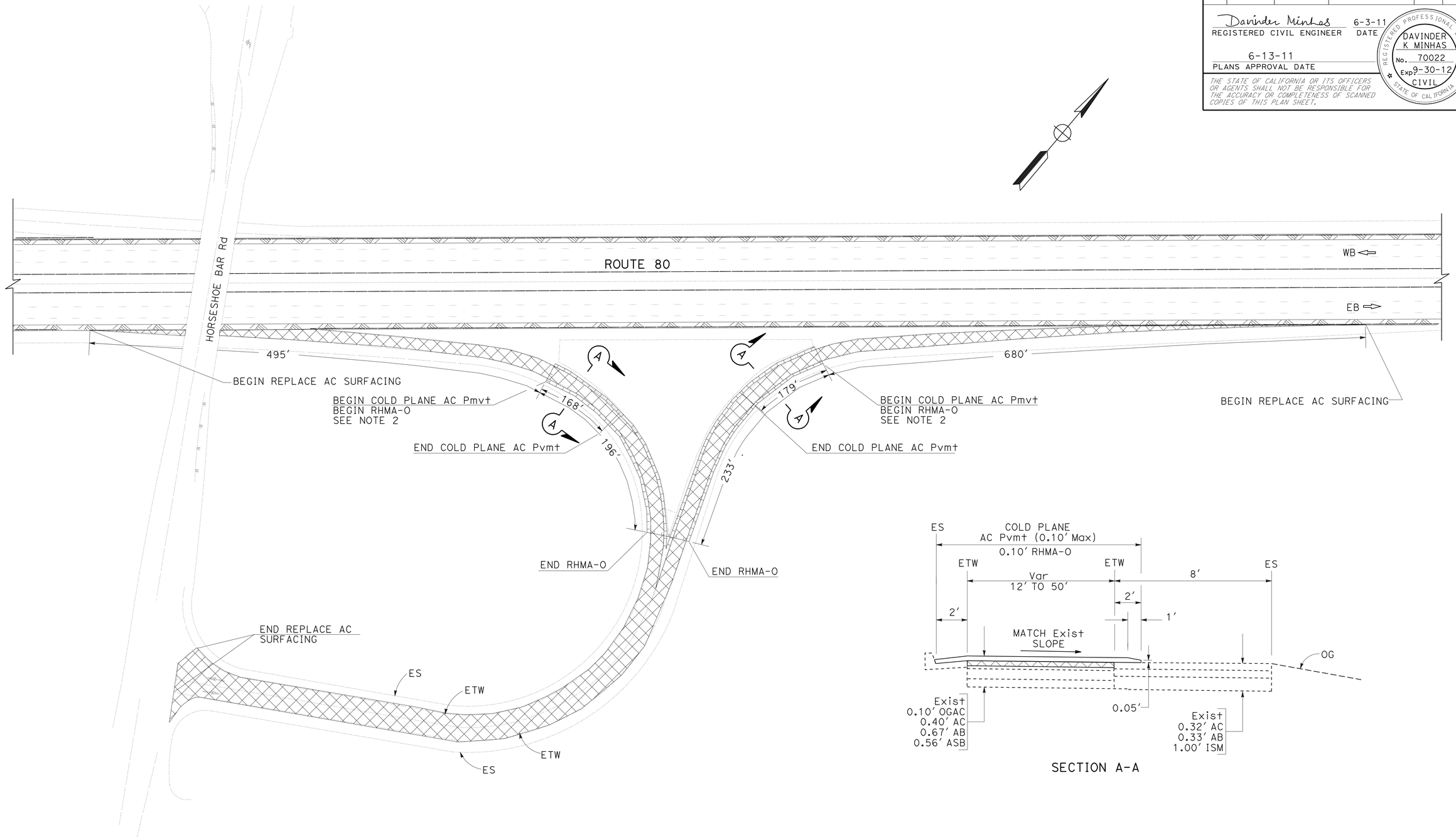

HORSESHOE BAR Rd
EASTBOUND EXIT RAMP
EASTBOUND ENTRANCE RAMP

CONSTRUCTION DETAILS

NO SCALE

C-3

STATE OF CALIFORNIA - DEPARTMENT OF TRANSPORTATION
Caltrans® DIVISION OF ENGINEERING

FUNCTIONAL SUPERVISOR: DEANN SPANGLER
CALCULATED-DESIGNED BY: DAVINDER MINHAS
CHECKED BY: DAVID MERRIMAN
REVISED BY
DATE REVISED

LAST REVISION 6-6-11
DATE PLOTTED => 14-JUN-2011
TIME PLOTTED => 06:37

Dist	COUNTY	ROUTE	POST MILES TOTAL PROJECT	SHEET No.	TOTAL SHEETS
03	Pla	80	5.1/14.5	6	59

Davinder Minhas 6-3-11
REGISTERED CIVIL ENGINEER DATE

6-13-11
PLANS APPROVAL DATE

REGISTERED PROFESSIONAL ENGINEER
DAVINDER K MINHAS
No. 70022
Exp 9-30-12
CIVIL
STATE OF CALIFORNIA

THE STATE OF CALIFORNIA OR ITS OFFICERS OR AGENTS SHALL NOT BE RESPONSIBLE FOR THE ACCURACY OR COMPLETENESS OF SCANNED COPIES OF THIS PLAN SHEET.

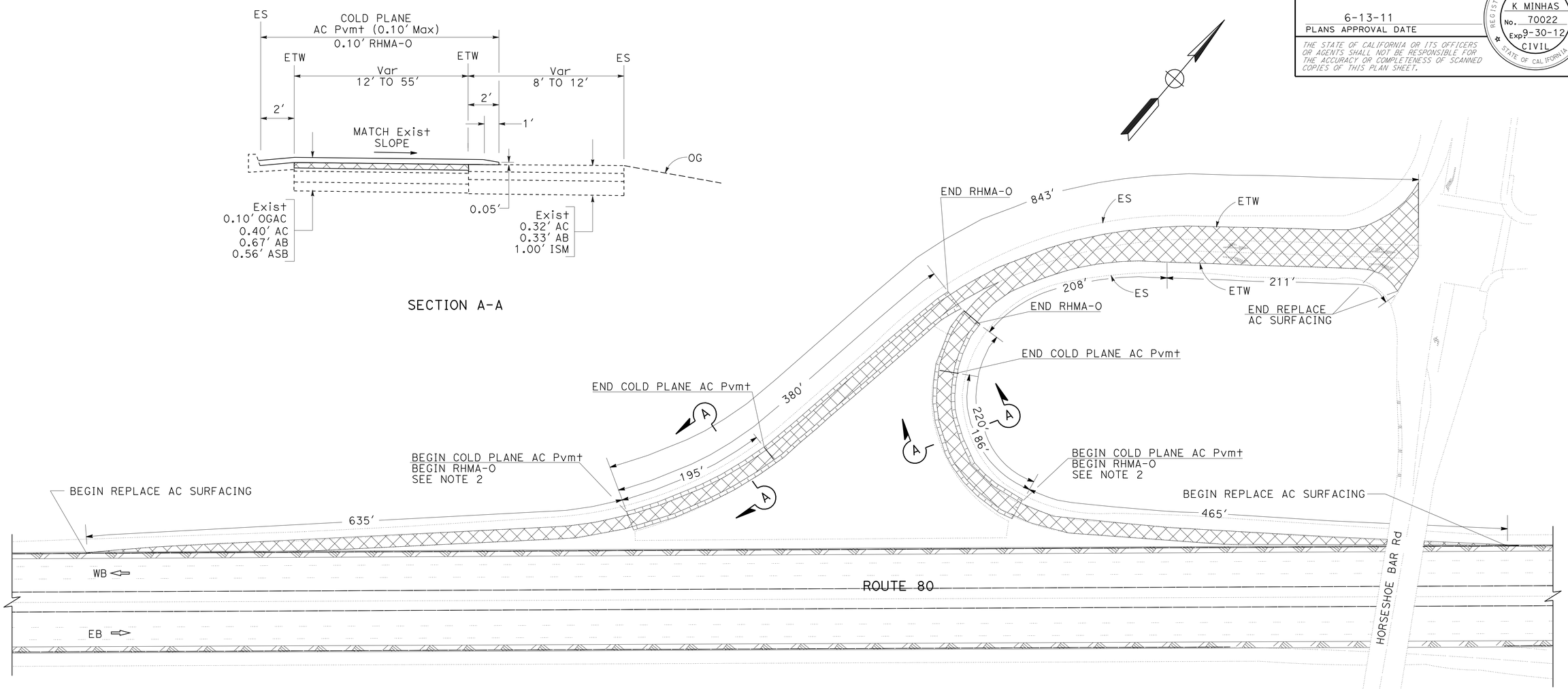

HORSESHOE BAR Rd
WESTBOUND EXIT RAMP
WESTBOUND ENTRANCE RAMP

CONSTRUCTION DETAILS
NO SCALE

C-4

STATE OF CALIFORNIA - DEPARTMENT OF TRANSPORTATION
Caltrans® DIVISION OF ENGINEERING

FUNCTIONAL SUPERVISOR: DEANN SPANGLER
CALCULATED-DESIGNED BY: DAVINDER MINHAS
CHECKED BY: DAVID MERRIMAN
REVISED BY
DATE REVISED

LAST REVISION 6-6-11
DATE PLOTTED => 14-JUN-2011
TIME PLOTTED => 06:37

Dist	COUNTY	ROUTE	POST MILES TOTAL PROJECT	SHEET No.	TOTAL SHEETS
03	Pla	80	5.1/14.5	7	59

Davinder Minhas 6-3-11
REGISTERED CIVIL ENGINEER DATE

6-13-11
PLANS APPROVAL DATE

REGISTERED PROFESSIONAL ENGINEER
DAVINDER K MINHAS
No. 70022
Exp 9-30-12
CIVIL
STATE OF CALIFORNIA

THE STATE OF CALIFORNIA OR ITS OFFICERS OR AGENTS SHALL NOT BE RESPONSIBLE FOR THE ACCURACY OR COMPLETENESS OF SCANNED COPIES OF THIS PLAN SHEET.

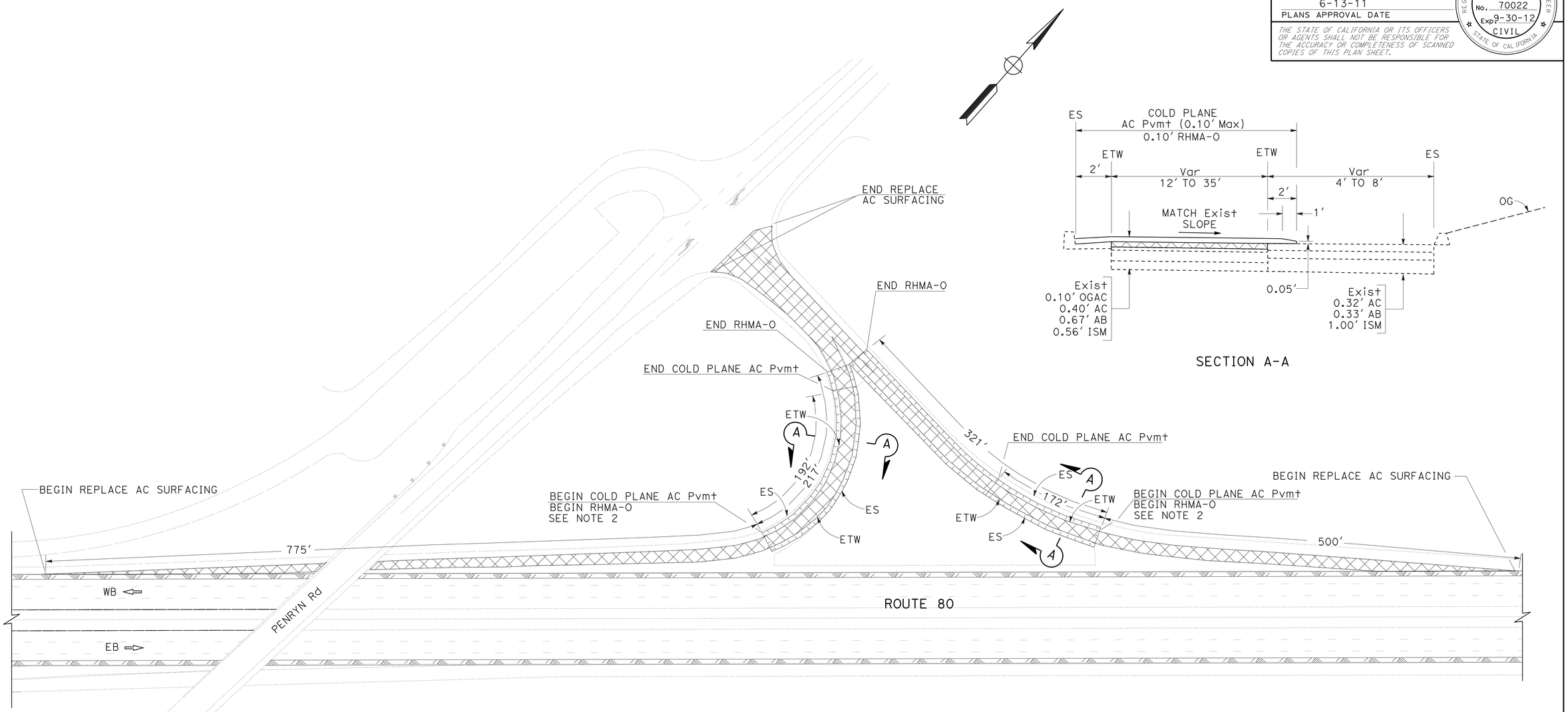

PENRYN Rd
WESTBOUND EXIT RAMP
WESTBOUND ENTRANCE RAMP

CONSTRUCTION DETAILS
NO SCALE

C-5

STATE OF CALIFORNIA - DEPARTMENT OF TRANSPORTATION
Caltrans® DIVISION OF ENGINEERING

FUNCTIONAL SUPERVISOR: DEANN SPANGLER
CALCULATED-DESIGNED BY: DAVINDER MINHAS
CHECKED BY: DAVID MERRIMAN
REVISED BY
DATE REVISED

LAST REVISION 6-6-11
DATE PLOTTED => 14-JUN-2011
TIME PLOTTED => 06:37

Dist	COUNTY	ROUTE	POST MILES TOTAL PROJECT	SHEET No.	TOTAL SHEETS
03	Pla	80	5.1/14.5	8	59

Davinder Minhas 6-3-11
REGISTERED CIVIL ENGINEER DATE

6-13-11
PLANS APPROVAL DATE

REGISTERED PROFESSIONAL ENGINEER
DAVINDER K MINHAS
No. 70022
Exp 9-30-12
CIVIL
STATE OF CALIFORNIA

THE STATE OF CALIFORNIA OR ITS OFFICERS OR AGENTS SHALL NOT BE RESPONSIBLE FOR THE ACCURACY OR COMPLETENESS OF SCANNED COPIES OF THIS PLAN SHEET.

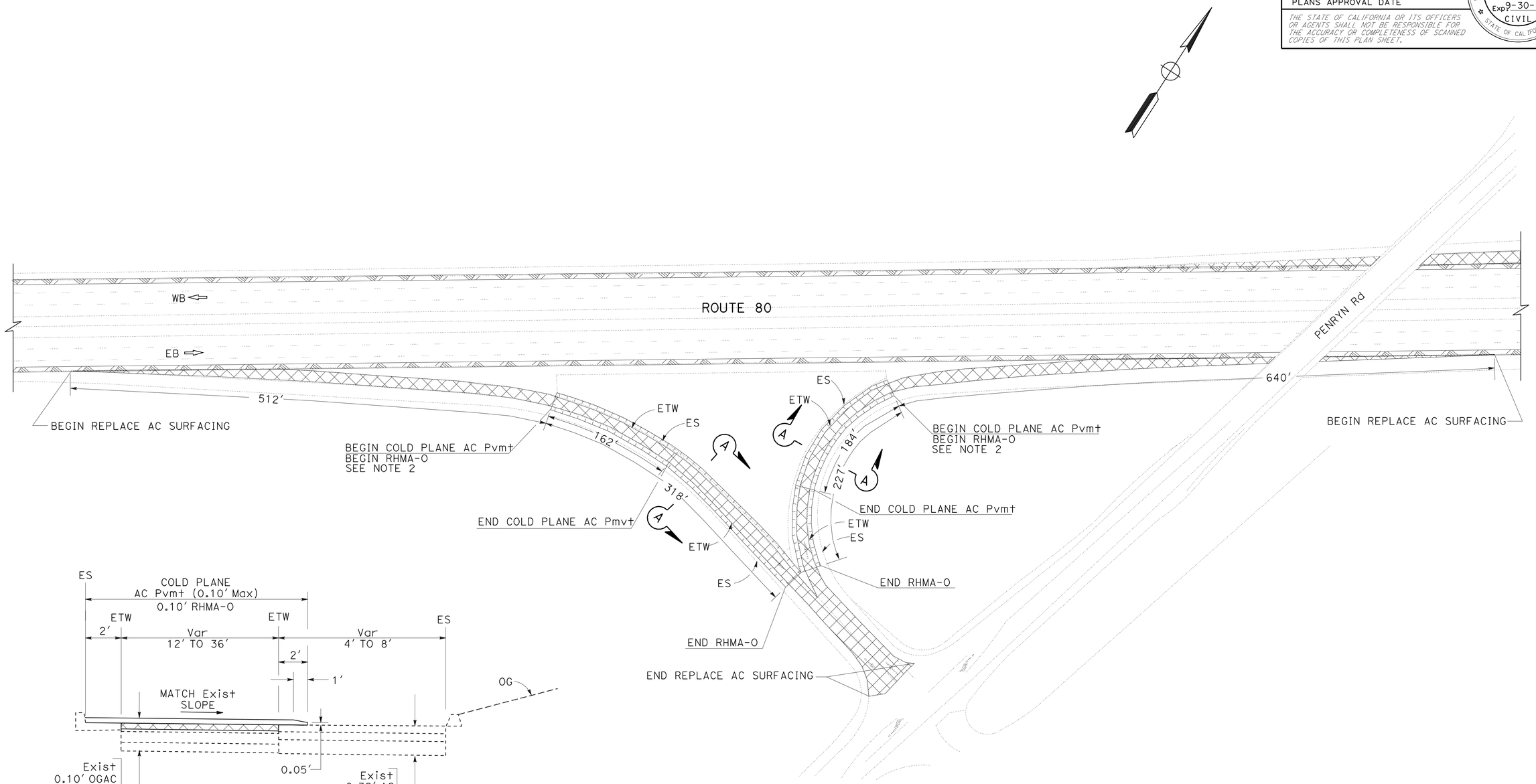

SECTION A-A

PENRYN Rd
EASTBOUND EXIT RAMP
EASTBOUND ENTRANCE RAMP

CONSTRUCTION DETAILS
NO SCALE

C-6

STATE OF CALIFORNIA - DEPARTMENT OF TRANSPORTATION
Caltrans DIVISION OF ENGINEERING

FUNCTIONAL SUPERVISOR: DEANN SPANGLER
CALCULATED-DESIGNED BY: DAVINDER MINHAS
CHECKED BY: DAVID MERRIMAN
REVISED BY
DATE REVISED

LAST REVISION 6-6-11
DATE PLOTTED => 14-JUN-2011
TIME PLOTTED => 06:37

Dist	COUNTY	ROUTE	POST MILES TOTAL PROJECT	SHEET No.	TOTAL SHEETS
03	Pla	80	5.1/14.5	9	59

Davinder Minhas 6-3-11
REGISTERED CIVIL ENGINEER DATE

6-13-11
PLANS APPROVAL DATE

REGISTERED PROFESSIONAL ENGINEER
DAVINDER K MINHAS
No. 70022
Exp 9-30-12
CIVIL
STATE OF CALIFORNIA

THE STATE OF CALIFORNIA OR ITS OFFICERS OR AGENTS SHALL NOT BE RESPONSIBLE FOR THE ACCURACY OR COMPLETENESS OF SCANNED COPIES OF THIS PLAN SHEET.

NOTES:

1. EXISTING UTILITY FACILITIES ARE NOT SHOWN ON THESE PLANS.
2. EXISTING BARRIER DIMENSIONS SHALL BE VERIFIED BY THE CONTRACTOR IN THE FIELD BEFORE FABRICATING ANY END CONNECTION TO CONFORM WITH EXISTING CONDITIONS.
3. FOR MODIFIED TRANSITION RAILING (TYPE WB), SEE CONSTRUCTION DETAILS SHEET C-10.
4. FOR MODIFIED METAL BEAM GUARD RAILING, SEE CONSTRUCTION DETAILS SHEET C-8.

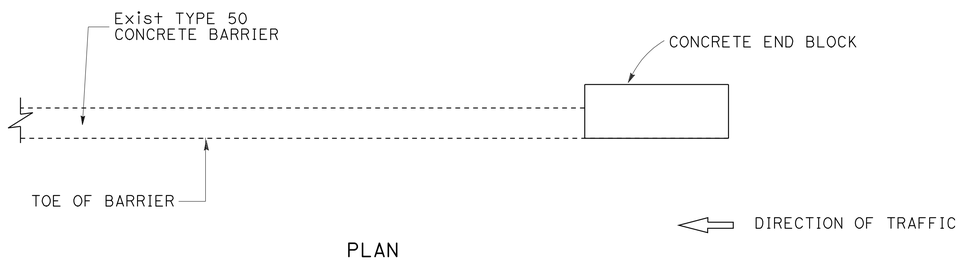

PLAN

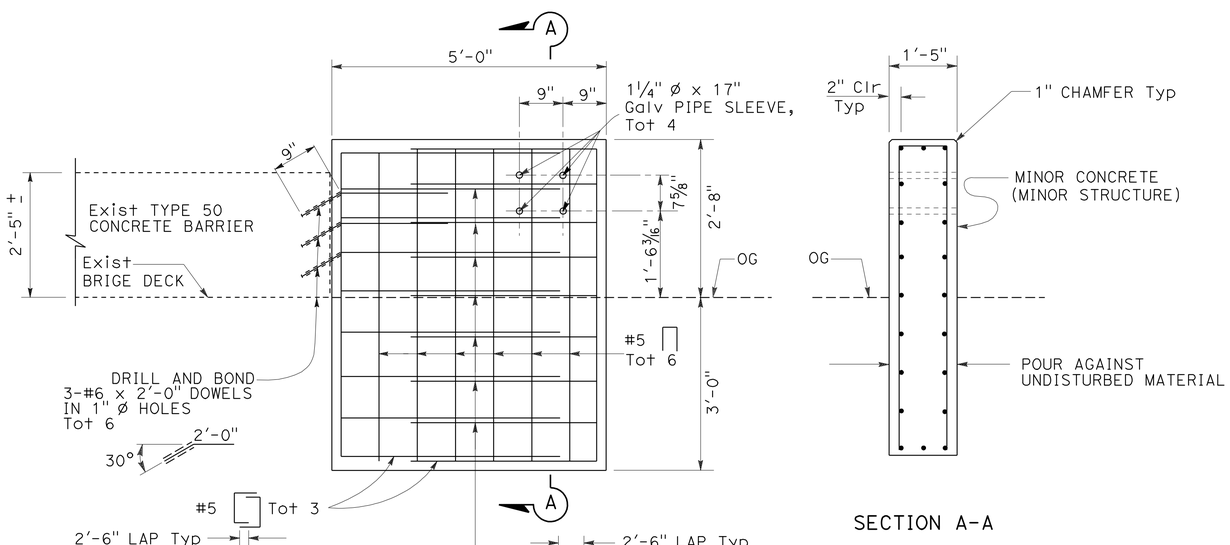

SECTION A-A

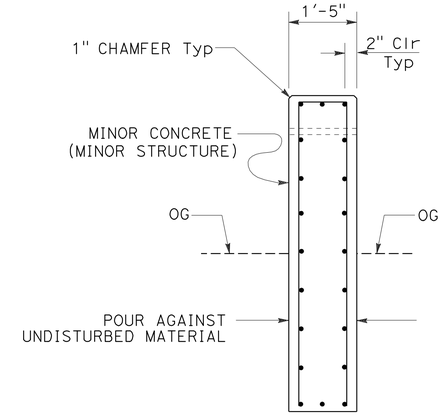

SECTION B-B

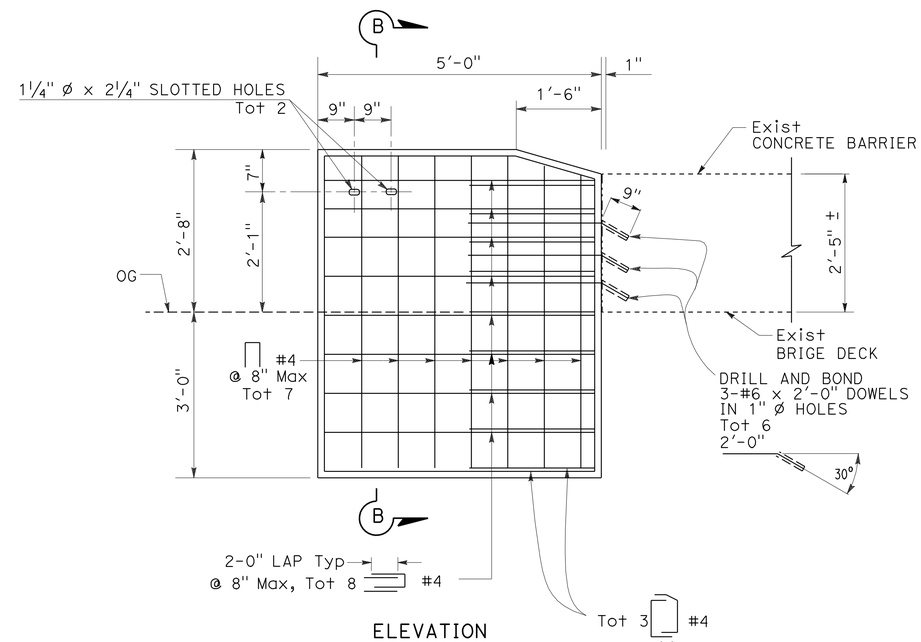

ELEVATION

CONCRETE END BLOCK DETAIL (BRIDGE APPROACH)

ROCKLIN Rd UC STRUCTURE APPROACH (EB & WB)
PENRYN ROCK SPRINGS UC STRUCTURE APPROACH (EB & WB)
ROUTE 80/193 SEPARATION UC STRUCTURE APPROACH (EB & WB)

CONCRETE END BLOCK DETAIL (BRIDGE DEPARTURE)

ROCKLIN Rd UC STRUCTURE DEPARTURE (EB)

CONCRETE END BLOCK DETAIL

CONSTRUCTION DETAILS

NO SCALE

C-7

STATE OF CALIFORNIA - DEPARTMENT OF TRANSPORTATION
Caltrans® DIVISION OF ENGINEERING

FUNCTIONAL SUPERVISOR: DEANN SPANGLER

CALCULATED-DESIGNED BY: DAVINDER MINHAS
CHECKED BY: DAVID MERRIMAN

REVISED BY
DATE REVISED

LAST REVISION 6-6-11
DATE PLOTTED => 14-JUN-2011
TIME PLOTTED => 06:38

Dist	COUNTY	ROUTE	POST MILES TOTAL PROJECT	SHEET No.	TOTAL SHEETS
03	Pla	80	5.1/14.5	10	59

Davinder Minhas 6-3-11
REGISTERED CIVIL ENGINEER DATE

6-13-11
PLANS APPROVAL DATE

REGISTERED PROFESSIONAL ENGINEER
DAVINDER K MINHAS
No. 70022
Exp 9-30-12
CIVIL
STATE OF CALIFORNIA

THE STATE OF CALIFORNIA OR ITS OFFICERS OR AGENTS SHALL NOT BE RESPONSIBLE FOR THE ACCURACY OR COMPLETENESS OF SCANNED COPIES OF THIS PLAN SHEET.

NOTES:

1. EXISTING UTILITY FACILITIES ARE NOT SHOWN ON THESE PLANS.
2. USE A SINGLE OR COMBINATION OF BLOCKS TO ACHIEVE THE ACTUAL 12" OFFSET. WOOD OR PLASTIC BLOCKS SHALL BE TOE-NAILED TO POST (AND BLOCKS, IF BLOCK COMBINATIONS ARE UTILIZED) WITH A 16D GALVANIZED NAIL TO PREVENT BLOCK ROTATION.
3. USE A 5/8" x 22" BUTTON HEAD BOLT WITH A 7/32" OVAL GRIP (Typ) FOR WOOD POSTS.
4. FOR ADDITIONAL DETAILS, SEE REVISED STANDARD PLAN A77A1.

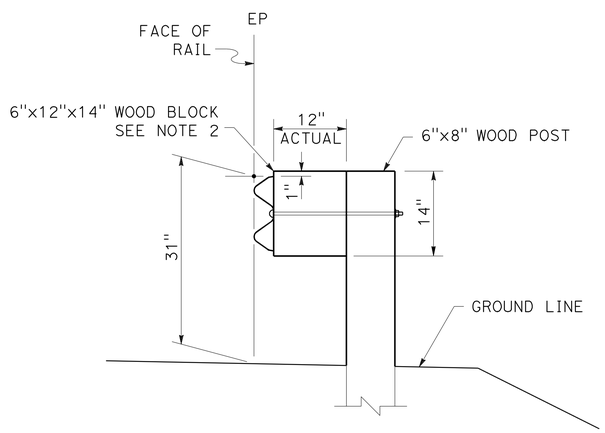

TYPICAL SECTION WITHOUT DIKE OR CURB

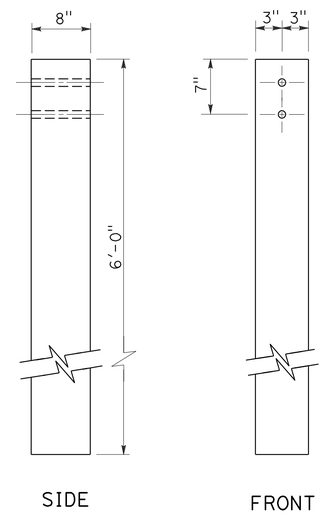

6" x 8" WOOD POST
SEE NOTE 4

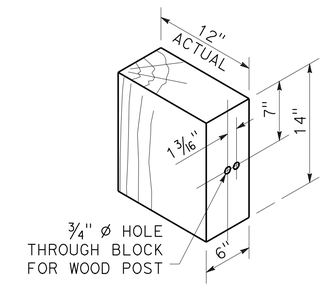

WOOD BLOCK

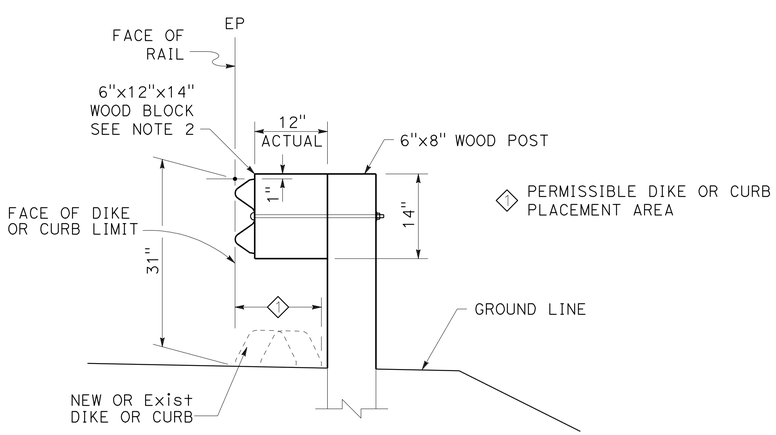

TYPICAL SECTION WITH DIKE OR CURB

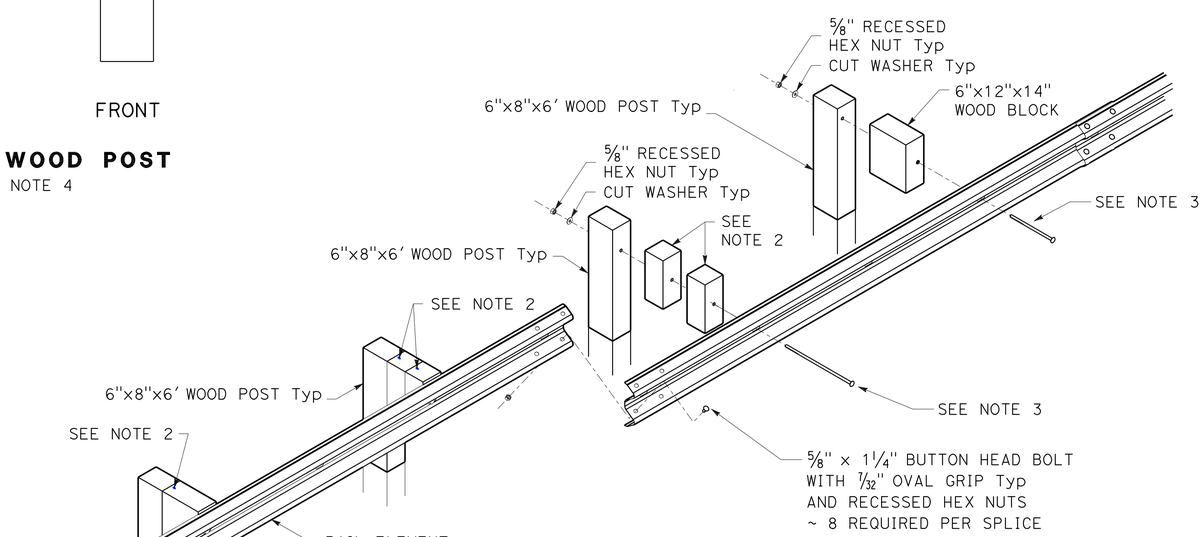

ISOMETRIC VIEW

MODIFIED METAL BEAM GUARD RAILING

CONSTRUCTION DETAILS
NO SCALE

C-8

STATE OF CALIFORNIA - DEPARTMENT OF TRANSPORTATION
Caltrans® DIVISION OF ENGINEERING

FUNCTIONAL SUPERVISOR: DEANN SPANGLER
CALCULATED-DESIGNED BY: DAVINDER MINHAS
CHECKED BY: DAVID MERRIMAN
REVISED BY
DATE REVISED

LAST REVISION 6-6-11
DATE PLOTTED => 14-JUN-2011
TIME PLOTTED => 06:38

Dist	COUNTY	ROUTE	POST MILES TOTAL PROJECT	SHEET No.	TOTAL SHEETS
03	Pla	80	5.1/14.5	11	59

Davinder Minhas 6-3-11
REGISTERED CIVIL ENGINEER DATE

6-13-11
PLANS APPROVAL DATE

REGISTERED PROFESSIONAL ENGINEER
DAVINDER K MINHAS
No. 70022
Exp 9-30-12
CIVIL
STATE OF CALIFORNIA

THE STATE OF CALIFORNIA OR ITS OFFICERS OR AGENTS SHALL NOT BE RESPONSIBLE FOR THE ACCURACY OR COMPLETENESS OF SCANNED COPIES OF THIS PLAN SHEET.

NOTES:

1. EXISTING UTILITY FACILITIES ARE NOT SHOWN ON THESE PLANS.
2. FOR ADDITIONAL DETAILS, SEE REVISED STANDARD PLAN A77H1.
3. APPLICATION OF NESTED RAIL TO BE DETERMINED BY THE ENGINEER.

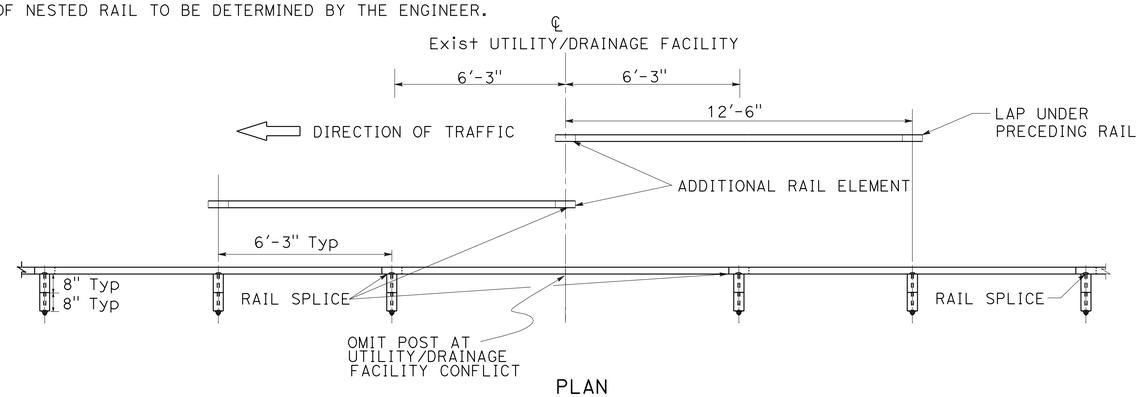

PLAN

2-RAIL NESTED MBGR ELEMENT FOR MODIFIED MBGR (SPLICE IN CENTER)

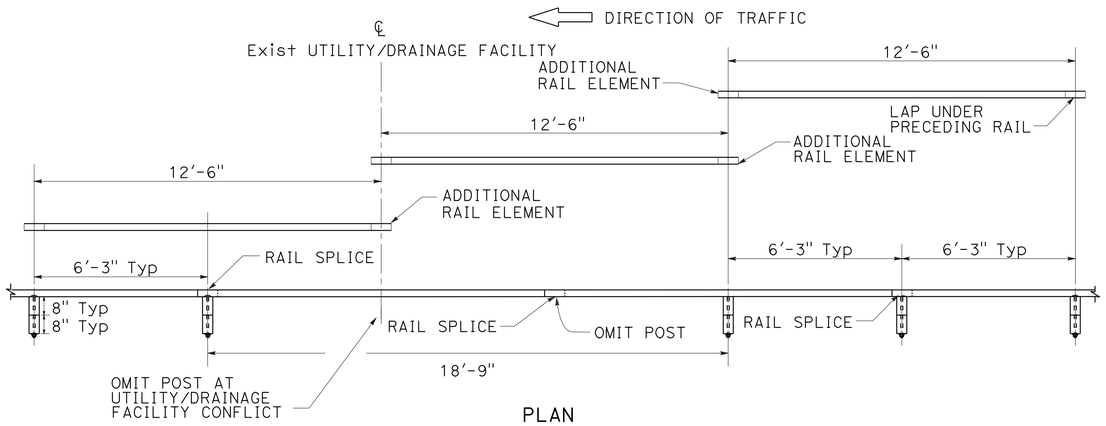

PLAN

3-RAIL NESTED MBGR ELEMENT FOR MODIFIED MBGR (TWO POSTS OMITTED)

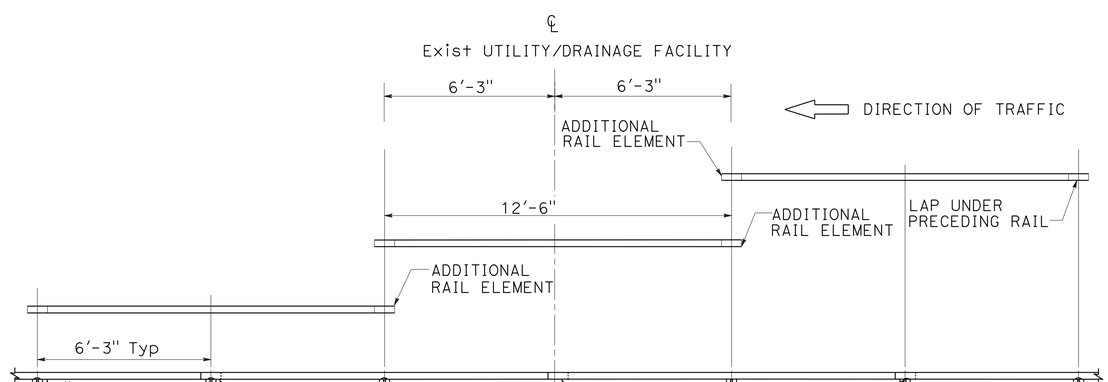

PLAN

3-RAIL NESTED MBGR ELEMENT FOR MODIFIED MBGR (SPLICE AT POSTS)

SEE NOTE 3

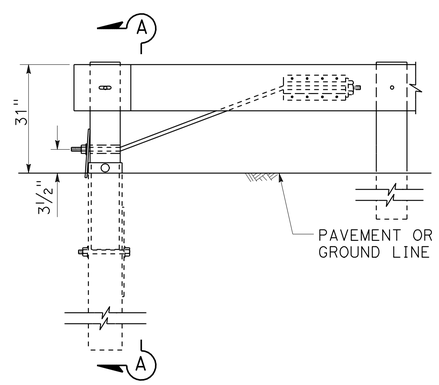

ELEVATION

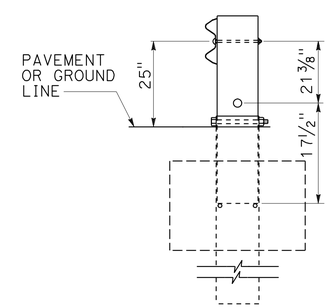

SECTION A-A

MODIFIED END ANCHOR ASSEMBLY (TYPE SFT)

SEE NOTE 2

CONSTRUCTION DETAILS

NO SCALE

C-9

STATE OF CALIFORNIA - DEPARTMENT OF TRANSPORTATION
Caltrans® DIVISION OF ENGINEERING

FUNCTIONAL SUPERVISOR: DEANN SPANGLER

CALCULATED-DESIGNED BY: DAVINDER MINHAS
CHECKED BY: DAVID MERRIMAN

REVISED BY
DATE REVISED

LAST REVISION 6-6-11
DATE PLOTTED => 14-JUN-2011
TIME PLOTTED => 06:38

Dist	COUNTY	ROUTE	POST MILES TOTAL PROJECT	SHEET No.	TOTAL SHEETS
03	Pla	80	5.1/14.5	12	59

Davinder Minhas 6-3-11
REGISTERED CIVIL ENGINEER DATE

6-13-11
PLANS APPROVAL DATE

REGISTERED PROFESSIONAL ENGINEER DAVINDER K MINHAS No. 70022 Exp 9-30-12 CIVIL STATE OF CALIFORNIA

THE STATE OF CALIFORNIA OR ITS OFFICERS OR AGENTS SHALL NOT BE RESPONSIBLE FOR THE ACCURACY OR COMPLETENESS OF SCANNED COPIES OF THIS PLAN SHEET.

NOTES:

1. EXISTING UTILITY FACILITIES ARE NOT SHOWN ON THESE PLANS.
2. FOR ADDITIONAL DETAILS, SEE REVISED STANDARD PLAN A77J4.

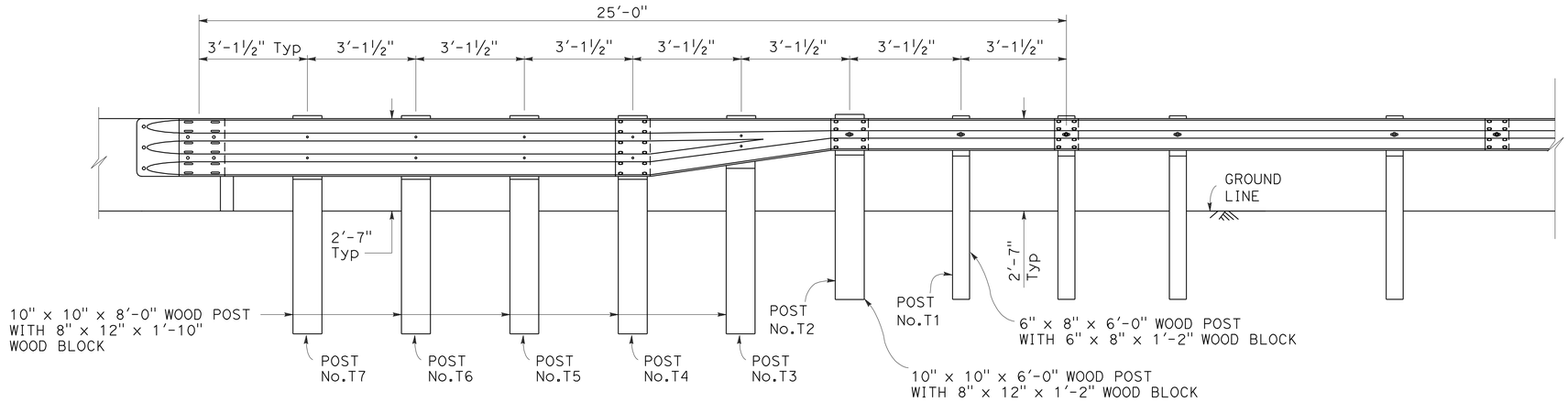

ELEVATION

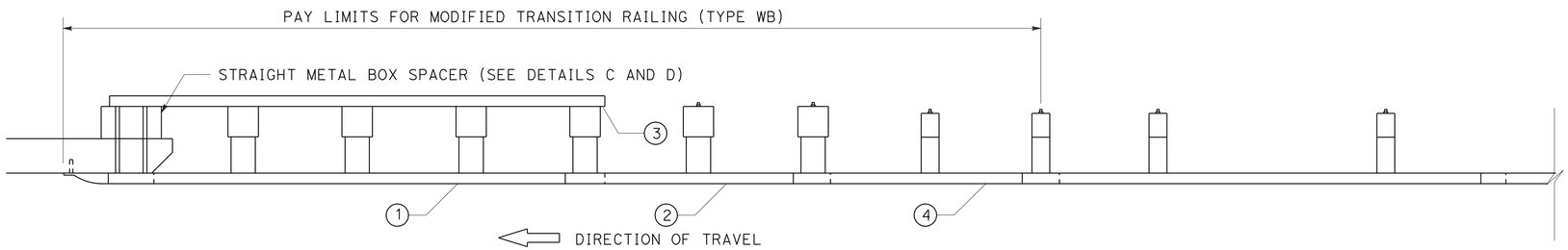

PLAN

MODIFIED TRANSITION RAILING (TYPE WB)
(BLOCKOUT ATTACHMENT)

LEGEND

1. NESTED THRIE BEAM ELEMENTS (ONE 12 GAGE ELEMENT NESTED OVER ONE 10 GAGE ELEMENT).
2. ONE 10 GAGE REDUCER ELEMENT TYPE C.
3. ONE 12 GAGE THRIE BEAM ELEMENT.
4. ONE 10 GAGE "W" BEAM RAIL ELEMENT (7'-3½" LENGTH)

10 GAGE = 0.135" THICK
12 GAGE = 0.108" THICK

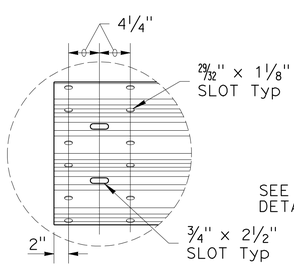

DETAIL A

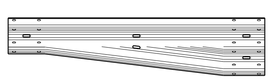

LEFT
(MIRROR OF RIGHT)

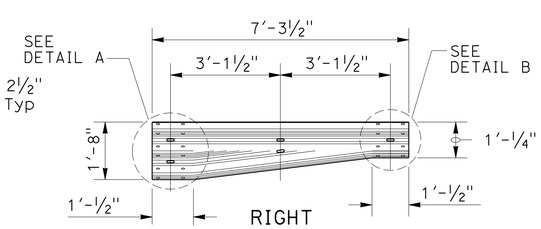

RIGHT

REDUCER ELEMENT TYPE C

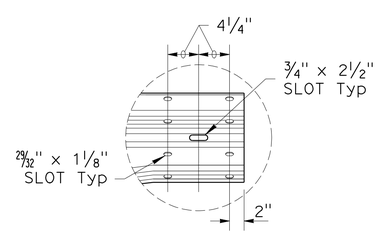

DETAIL B

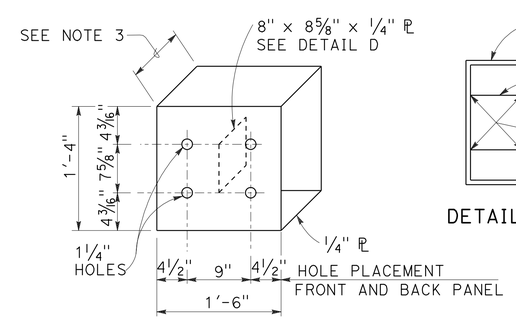

DETAIL C

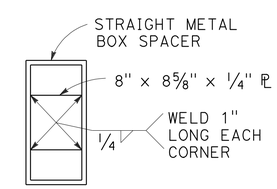

DETAIL D

STRAIGHT METAL BOX SPACER

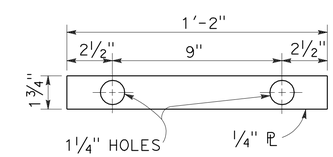

DETAIL E

PLATE 'A'

MODIFIED TRANSITION RAILING (TYPE WB)

CONSTRUCTION DETAILS
NO SCALE

C-10

STATE OF CALIFORNIA - DEPARTMENT OF TRANSPORTATION
Caltrans® DIVISION OF ENGINEERING

FUNCTIONAL SUPERVISOR: DEANN SPANGLER
CALCULATED-DESIGNED BY: DAVINDER MINHAS
CHECKED BY: DAVID MERRIMAN
REVISED BY
DATE REVISED

LAST REVISION 6-6-11
DATE PLOTTED => 14-JUN-2011
TIME PLOTTED => 06:38

Dist	COUNTY	ROUTE	POST MILES TOTAL PROJECT	SHEET No.	TOTAL SHEETS
03	Pla	80	5.1/14.5	13	59

Davinder Minhas 6-3-11
REGISTERED CIVIL ENGINEER DATE

6-13-11
PLANS APPROVAL DATE

REGISTERED PROFESSIONAL ENGINEER
DAVINDER K MINHAS
No. 70022
Exp 9-30-12
CIVIL
STATE OF CALIFORNIA

THE STATE OF CALIFORNIA OR ITS OFFICERS OR AGENTS SHALL NOT BE RESPONSIBLE FOR THE ACCURACY OR COMPLETENESS OF SCANNED COPIES OF THIS PLAN SHEET.

NOTES:

1. EXISTING UTILITY FACILITIES ARE NOT SHOWN ON THESE PLANS.
2. FOR ADDITIONAL DETAILS, SEE STANDARD PLANS A77L1 AND A77L5.

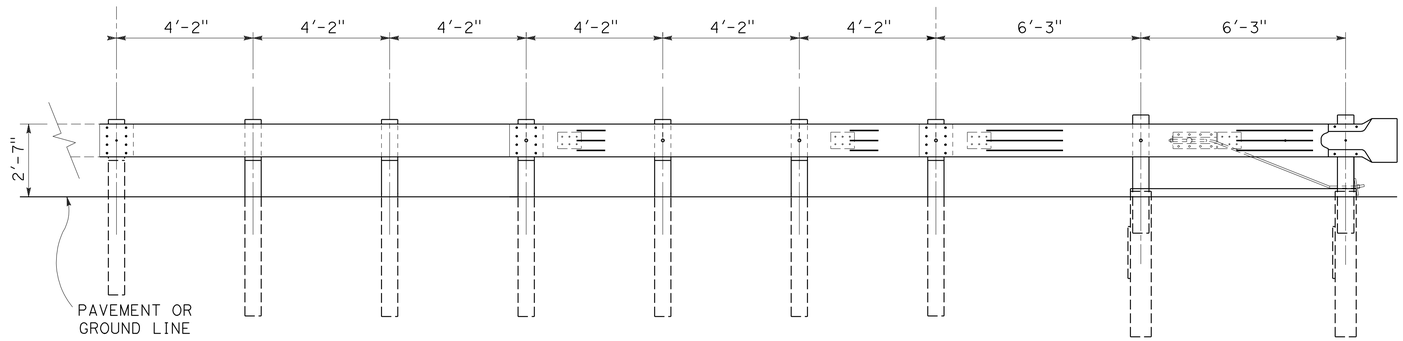

ELEVATION

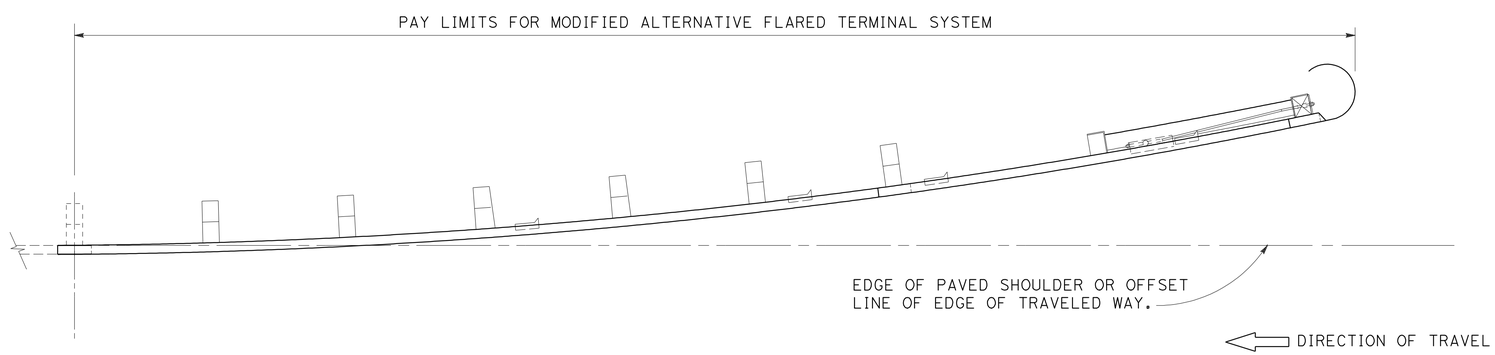

PLAN

MODIFIED ALTERNATIVE FLARED TERMINAL SYSTEM

CONSTRUCTION DETAILS

NO SCALE

C-11

STATE OF CALIFORNIA - DEPARTMENT OF TRANSPORTATION
Caltrans® DIVISION OF ENGINEERING

FUNCTIONAL SUPERVISOR: DEANN SPANGLER

CALCULATED-DESIGNED BY: DAVINDER MINHAS
CHECKED BY: DAVID MERRIMAN

REVISED BY
DATE REVISED

LAST REVISION 6-6-11
DATE PLOTTED => 14-JUN-2011
TIME PLOTTED => 06:38

Dist	COUNTY	ROUTE	POST MILES TOTAL PROJECT	SHEET No.	TOTAL SHEETS
03	Pla	80	5.1/14.5	14	59

Davinder Minhas 6-3-11
REGISTERED CIVIL ENGINEER DATE

6-13-11
PLANS APPROVAL DATE

REGISTERED PROFESSIONAL ENGINEER
DAVINDER K MINHAS
No. 70022
Exp 9-30-12
CIVIL
STATE OF CALIFORNIA

THE STATE OF CALIFORNIA OR ITS OFFICERS OR AGENTS SHALL NOT BE RESPONSIBLE FOR THE ACCURACY OR COMPLETENESS OF SCANNED COPIES OF THIS PLAN SHEET.

NOTES:

1. CONFORM LOCATION PM IS APPROXIMATE. EXACT LOCATION WILL BE DETERMINED BY THE ENGINEER.
2. CONFORM AT BEGINNING OF APPROACH/DEPARTURE/SLEEPER SLAB.

LEGEND:

- COLD PLANE AC PAVEMENT (0'-0.10' Max)
- REPLACE AC SURFACING
- LIMITS OF RHMA-O (0.10')
- DIRECTION OF TRAVEL

ABBREVIATION:

RHMA-O - RUBBERIZED HOT MIX ASPHALT (OPEN GRADED)

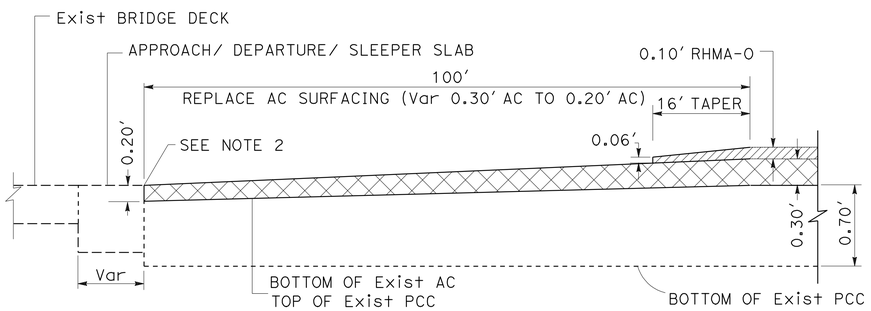

DETAIL AT UNDERCROSSINGS
ROCKLIN Rd UC - PM 6.02 TO 6.11
PENYRN ROCK SPRINGS Rd UC - PM 11.35 TO 11.44
80 / 193 SEPARATION - PM 14.25 TO 14.33
ELEVATION

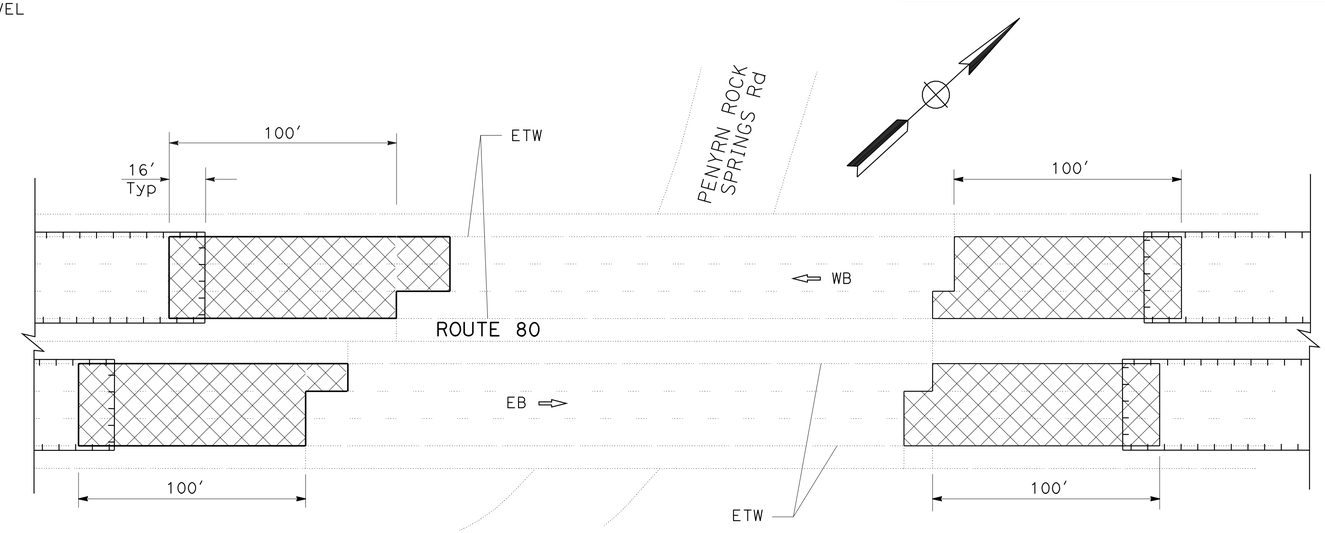

PENYRN ROCK SPRINGS Rd UC - PM 11.35 TO 11.44
PLAN

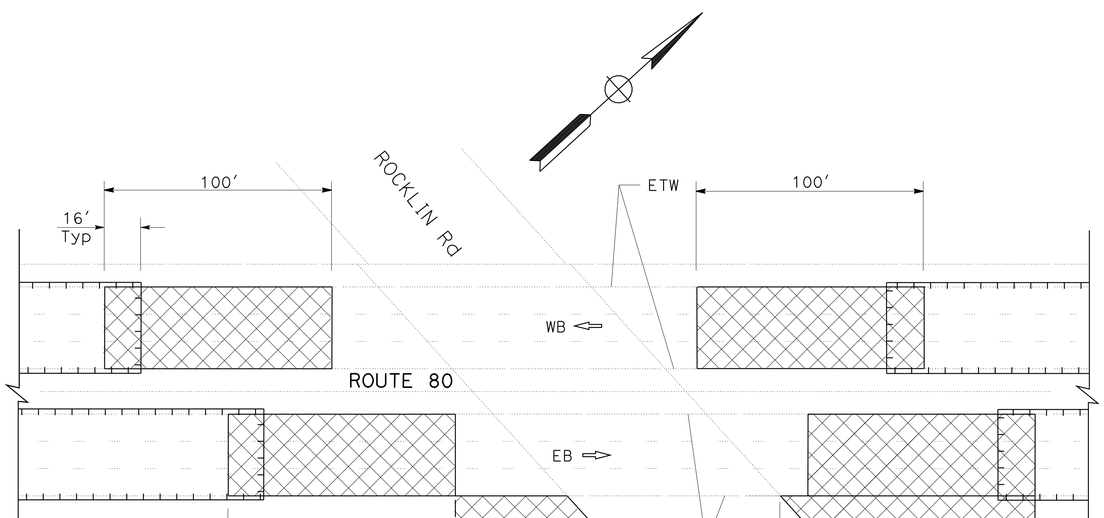

ROCKLIN Rd UC - PM 6.02 TO 6.11
PLAN

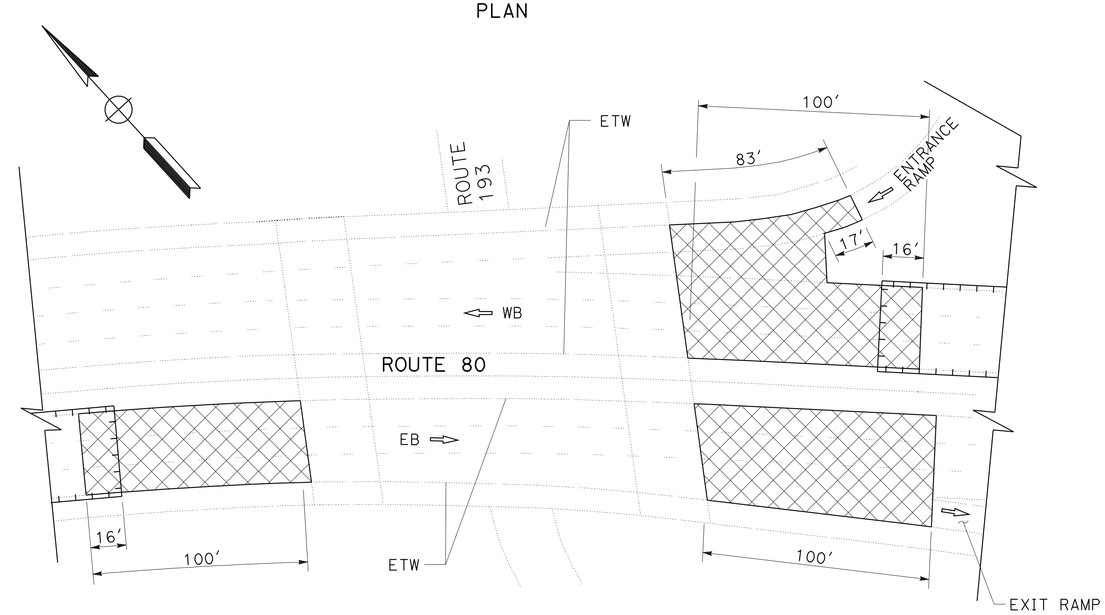

80 / 193 SEPARATION - PM 14.25 TO 14.33
PLAN

CONSTRUCTION DETAILS

NO SCALE

C-12

STATE OF CALIFORNIA - DEPARTMENT OF TRANSPORTATION
Caltrans DIVISION OF ENGINEERING

FUNCTIONAL SUPERVISOR: DEANN SPANGLER
CALCULATED-DESIGNED BY: DAVINDER MINHAS
CHECKED BY: DAVID MERRIMAN
REVISED BY
DATE REVISED

LAST REVISION 6-6-11
DATE PLOTTED => 14-JUN-2011
TIME PLOTTED => 06:38

Dist	COUNTY	ROUTE	POST MILES TOTAL PROJECT	SHEET No.	TOTAL SHEETS
03	Pla	80	5.1/14.5	15	59

Davinder Minhas 6-3-11
REGISTERED CIVIL ENGINEER DATE

6-13-11
PLANS APPROVAL DATE

REGISTERED PROFESSIONAL ENGINEER DAVINDER K MINHAS No. 70022 Exp 9-30-12 CIVIL STATE OF CALIFORNIA

THE STATE OF CALIFORNIA OR ITS OFFICERS OR AGENTS SHALL NOT BE RESPONSIBLE FOR THE ACCURACY OR COMPLETENESS OF SCANNED COPIES OF THIS PLAN SHEET.

NOTES:

1. EXACT LOCATION OF REPLACE AC SURFACING WILL BE DETERMINED BY THE ENGINEER.
2. SEE SUMMARY OF QUANTITIES SHEET FOR LOCATIONS.
3. FOR LOCATIONS AND QUANTITIES OF REPLACE AC SURFACING AT RAMPS, SEE SHEET C-1 TO C-6, AND SUMMARY OF QUANTITIES SHEET Q-2.
4. SEE CONSTRUCTION DETAILS SHEET C-12 FOR REPLACE AC SURFACING DETAIL AT STRUCTURE APPROACHES.
5. FOR DIKE DIMENSIONS NOT SHOWN, SEE STANDARD PLAN A87B.

ABBREVIATIONS:

RETW	RIGHT EDGE OF TRAVELED WAY
LL	LANE LINE
HMA-A	HOT MIX ASPHALT (TYPE A)

LEGEND:

REPLACE AC SURFACING

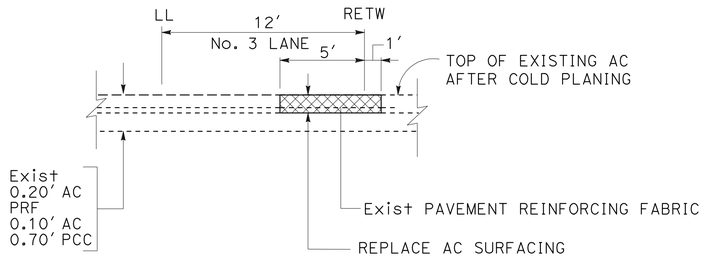

REPLACE AC SURFACING (6' WIDTH)
MAINLINE (EB & WB)
(SEE NOTE 2)

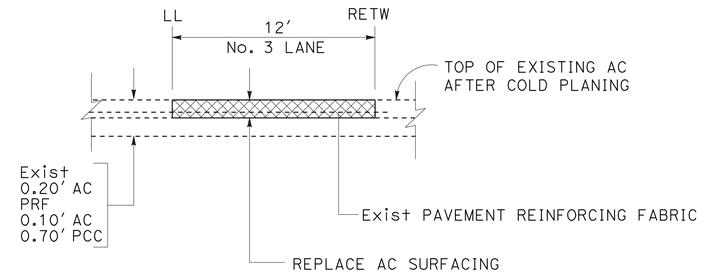

REPLACE AC SURFACING (12' WIDTH)
MAINLINE (EB & WB)
(SEE NOTE 2)

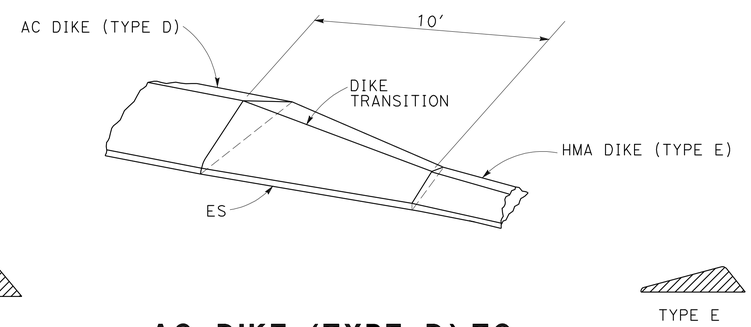

AC DIKE (TYPE D) TO HMA DIKE (TYPE E)

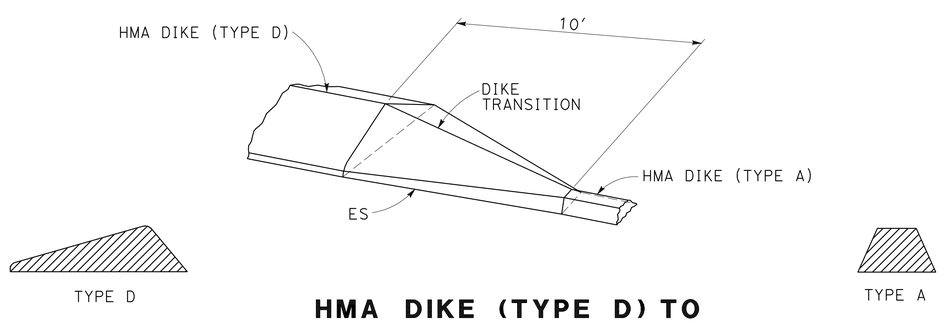

HMA DIKE (TYPE D) TO HMA DIKE (TYPE A)

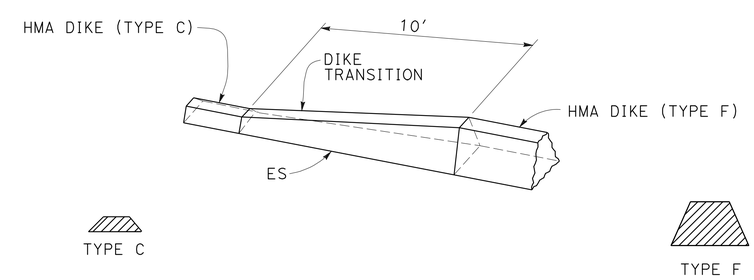

HMA DIKE (TYPE C) TO HMA DIKE (TYPE F)

CONSTRUCTION DETAILS
NO SCALE

C-13

STATE OF CALIFORNIA - DEPARTMENT OF TRANSPORTATION
Caltrans® DIVISION OF ENGINEERING
FUNCTIONAL SUPERVISOR: DEANN SPANGLER
CALCULATED-DESIGNED BY: DAVINDER MINHAS
CHECKED BY: DAVID MERRIMAN
REVISED BY
DATE REVISED

LAST REVISION 6-6-11
DATE PLOTTED => 14-JUN-2011
TIME PLOTTED => 06:39

Dist	COUNTY	ROUTE	POST MILES TOTAL PROJECT	SHEET No.	TOTAL SHEETS
03	Pla	80	5.1/14.5	16	59

Davinder Minhas 6-3-11
REGISTERED CIVIL ENGINEER DATE

6-13-11
PLANS APPROVAL DATE

REGISTERED PROFESSIONAL ENGINEER DAVINDER K MINHAS No. 70022 Exp 9-30-12 CIVIL STATE OF CALIFORNIA

THE STATE OF CALIFORNIA OR ITS OFFICERS OR AGENTS SHALL NOT BE RESPONSIBLE FOR THE ACCURACY OR COMPLETENESS OF SCANNED COPIES OF THIS PLAN SHEET.

NOTES:

1. MODIFY THE DIMENSIONS SHOWN IN THE CROSS SECTION TO MATCH THE CROSS SECTION OF EXISTING OVERSIDE DRAIN. EXACT DIMENSIONS TO BE DETERMINED IN THE FIELD.
2. SEE SUMMARY OF QUANTITIES SHEET Q-5 FOR LENGTH OF OVERSIDE DRAIN TO BE RECONSTRUCTED.

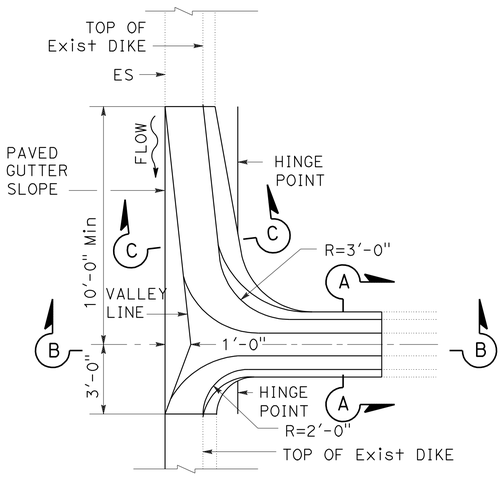

PLAN

OVERSIDE DRAIN (CASE 1)

RECONSTRUCT OVERSIDE DRAIN

SEE NOTE 1

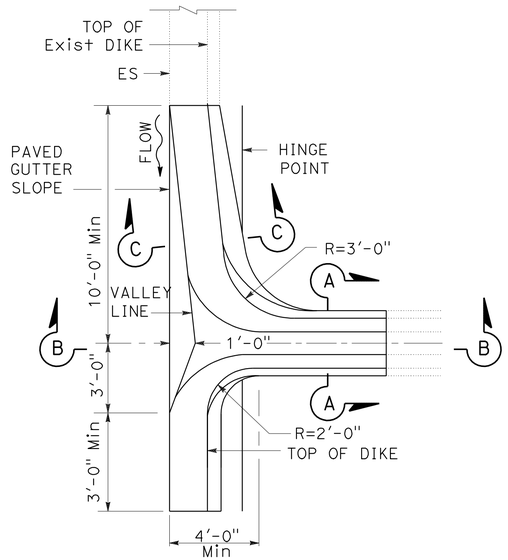

PLAN

OVERSIDE DRAIN (CASE 2)

RECONSTRUCT OVERSIDE DRAIN

SEE NOTE 1

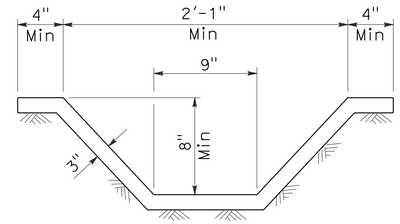

SECTION A-A

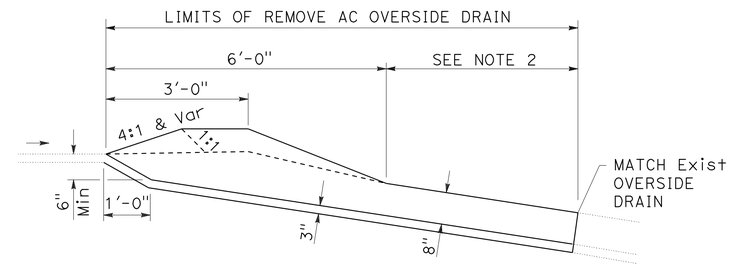

SECTION B-B

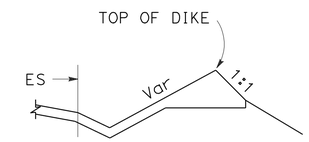

SECTION C-C

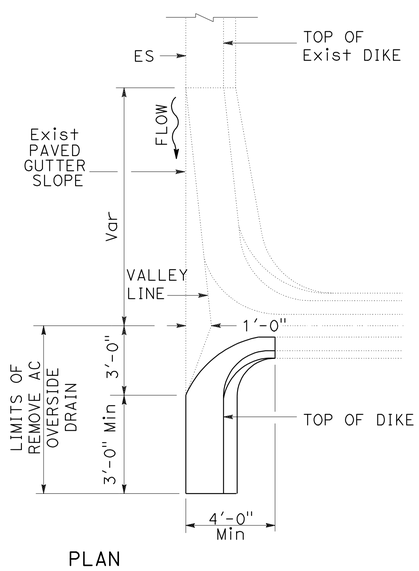

PLAN

OVERSIDE DRAIN (CASE 3)

RECONSTRUCT ONE SIDE OF OVERSIDE DRAIN

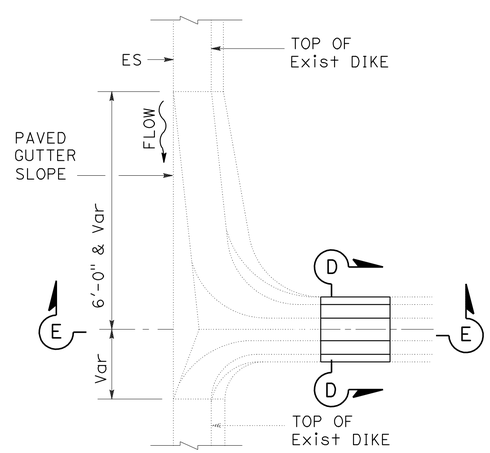

PLAN

OVERSIDE DRAIN (CASE 4)

PARTIAL RECONSTRUCTION OF OVERSIDE DRAIN

SEE NOTE 1

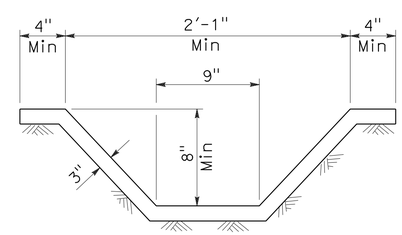

SECTION D-D

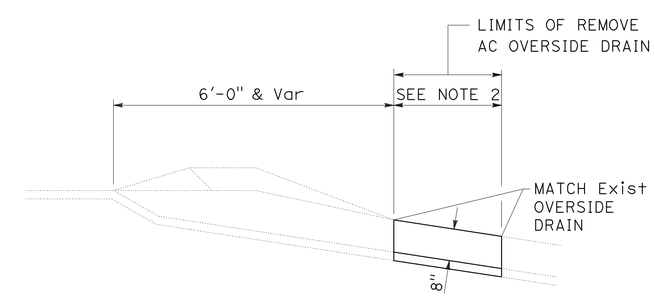

SECTION E-E

CONSTRUCTION DETAILS

NO SCALE

C-14

STATE OF CALIFORNIA - DEPARTMENT OF TRANSPORTATION
Caltrans DIVISION OF ENGINEERING

FUNCTIONAL SUPERVISOR: DEANN SPANGLER
CALCULATED-DESIGNED BY: DAVINDER MINHAS
CHECKED BY: DAVID MERRIMAN
REVISED BY
DATE REVISED

LAST REVISION 6-6-11
DATE PLOTTED => 14-JUN-2011
TIME PLOTTED => 06:39

Dist	COUNTY	ROUTE	POST MILES TOTAL PROJECT	SHEET No.	TOTAL SHEETS
03	Pla	80	5.1/14.5	17	59

REGISTERED CIVIL ENGINEER 6-3-11 DATE

6-13-11
PLANS APPROVAL DATE

REGISTERED PROFESSIONAL ENGINEER Joyce K. Loftus No. 38426 Exp. 3-31-13 CIVIL STATE OF CALIFORNIA

THE STATE OF CALIFORNIA OR ITS OFFICERS OR AGENTS SHALL NOT BE RESPONSIBLE FOR THE ACCURACY OR COMPLETENESS OF SCANNED COPIES OF THIS PLAN SHEET.

STATIONARY MOUNTED CONSTRUCTION AREA SIGNS

SIGN LETTER	SIGN CODE FEDERAL	SIGN CODE CALIFORNIA	PANEL SIZE	SIGN MESSAGE	NUMBER OF POST AND SIZE	NUMBER OF SIGNS
A	G20-1[Spec](10)		84" x 42"	ROAD WORK NEXT 10 MILES	2 - 4" x 6"	4
B		C14	48" x 24"	END ROAD WORK	1 - 4" x 6"	2
C	W20-1	C23	48" x 48"	ROAD WORK AHEAD	1 - 6" x 6"	12
D	G20-2	C14	36" x 18"	END ROAD WORK	1 - 4" x 4"	12
E		C40(Mod)	96" x 60"	TRAFFIC FINES DOUBLED IN WORK ZONES	2 - 6" x 6"	2

NOTE: EXACT SIGN LOCATIONS TO BE DETERMINED BY THE ENGINEER.

SIGN DETAILS

(A) G20-1[Spec](10)

ROAD WORK
NEXT 10 MILES

8" C SERIES LETTERS

84"X42"

RETROREFLECTIVE ORANGE BACKGROUND WITH BLACK LEGEND AND BORDERS.

(E) C40(Mod)<CA>

TRAFFIC FINES
DOUBLED IN
WORK ZONES

8" D SERIES LETTERS

96"X60"

RETROREFLECTIVE WHITE BACKGROUND WITH BLACK LEGEND AND BORDERS.

LEGEND

(X)	CONSTRUCTION AREA SIGN LETTER
	SIGN - SINGLE POST
	SIGN - TWO POST
<CA>	CALIFORNIA SIGN CODE

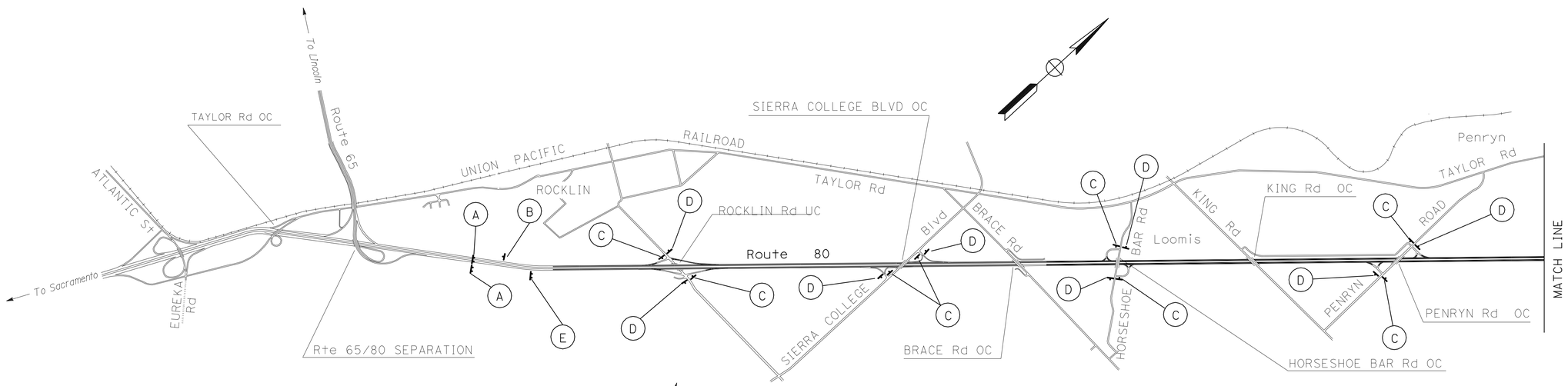

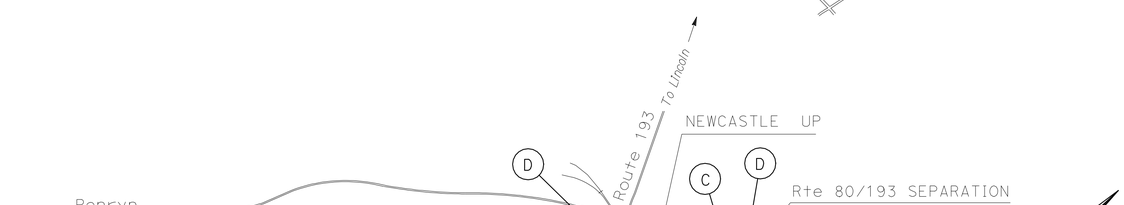

CONSTRUCTION AREA SIGNS

NO SCALE

CS-1

STATE OF CALIFORNIA - DEPARTMENT OF TRANSPORTATION
Caltrans
TRAFFIC

FUNCTIONAL SUPERVISOR: LAURIE LAMMERT

CALCULATED-DESIGNED BY: JOYCE LOFTUS
CHECKED BY: JOYCE LOFTUS

REVISED BY
DATE REVISED

LAST REVISION 05-31-11
DATE PLOTTED => 19-JUL-2011
TIME PLOTTED => 10:29

Dist	COUNTY	ROUTE	POST MILES TOTAL PROJECT	SHEET No.	TOTAL SHEETS
03	Pla	80	5.1/14.5	18	59

REGISTERED CIVIL ENGINEER 6-3-11 DATE

6-13-11
PLANS APPROVAL DATE

REGISTERED PROFESSIONAL ENGINEER Joyce K. Loftus No. 38426 Exp. 3-31-13 CIVIL STATE OF CALIFORNIA

THE STATE OF CALIFORNIA OR ITS OFFICERS OR AGENTS SHALL NOT BE RESPONSIBLE FOR THE ACCURACY OR COMPLETENESS OF SCANNED COPIES OF THIS PLAN SHEET.

PAVEMENT DELINEATION QUANTITIES

DESCRIPTION	4" THERMOPLASTIC TRAFFIC STRIPE				4" THERMOPLASTIC TRAFFIC STRIPE (BROKEN 17-7)	4" THERMOPLASTIC TRAFFIC STRIPE (BROKEN 36-12)		8" THERMOPLASTIC TRAFFIC STRIPE					8" THERMOPLASTIC TRAFFIC STRIPE (BROKEN 12-3)	PAVEMENT MARKER (RETROREFLECTIVE)				PAVEMENT MARKER (NON-REFLECTIVE)
	DETAIL NUMBER				DETAIL NUMBER	DETAIL NUMBER		DETAIL NUMBER					DETAIL NUMBER	TYPE C (EA)	TYPE D (EA)	TYPE G (EA)	TYPE H (EA)	TYPE AY (EA)
	21/23 (LF)	25 (LF)	25A (LF)	27B (LF)	9 (LF)	12 (LF)	14A (LF)	36 (LF)	36A (LF)	36B (LF)	38 (LF)	38B (LF)	37 (LF)					
WB MAINLINE ROUTE 80		45,462		45,853	301	87,756	3,168	2,300	391			236	560	88		2,009	949	
EB MAINLINE ROUTE 80		44,668		45,195	526	87,032	2,304	1,830	527	189		136		64		1,951	932	
RAMPS FOR ROCKLIN ROAD			2,866	2,866	383						1,383					68	121	
RAMPS FOR HORSESHOE BAR ROAD	1,006		1,417	3,429							215				84	10	60	420
RAMPS FOR PENRYN ROAD	238		1,309	1,785											22		56	110
RAMPS AT 80/193 SEPARATION			190	190													9	
SHEET TOTAL	1,244	90,130	5,782	99,318	1,210	174,788	5,472	4,130	918	189	1,598	372	560	152	106	4,038	2,127	530
TOTAL	196,474				1,210	180,260		7,207					560	6,423				530

NOTE: DETAIL 23 SHALL BE PLACED ON DETAIL 21.

THERMOPLASTIC PAVEMENT MARKING

DESCRIPTION	TYPE I (24') ARROW (SQFT)	TYPE II ARROW (SQFT)	TYPE II (B) ARROW (SQFT)	TYPE III ARROW (SQFT)	TYPE V ARROW (SQFT)	SIGNAL (SQFT)	STOP (SQFT)	AHEAD (SQFT)	LIMIT LINE (SQFT)	CROSSWALK (SQFT)	12" DIAGONAL (SQFT)	SUBTOTAL (SQFT)
RAMPS FOR ROCKLIN ROAD	93	90	118	252	132	64		62	36	289		1,136
RAMPS FOR HORSESHOE BAR ROAD	124	90		84	132	32	66	62	65		64	719
RAMPS FOR PENRYN ROAD	93	45		42	132	32	66	62	122	500		1,094
TOTAL												2,949

PAVEMENT DELINEATION QUANTITIES

PDQ-1

REVISED BY | DATE REVISED
JOYCE LOFTUS | JOYCE LOFTUS
CALCULATED-DESIGNED BY | CHECKED BY
FUNCTIONAL SUPERVISOR
LAURIE LAMMERT

STATE OF CALIFORNIA - DEPARTMENT OF TRANSPORTATION
Caltrans
TRAFFIC

P:\proj5\03\2f030\drafting\sheets\0300020444nc001.dgn

LAST REVISION 05-31-11 | DATE PLOTTED => 19-JUL-2011 | TIME PLOTTED => 10:29

Dist	COUNTY	ROUTE	POST MILES TOTAL PROJECT	SHEET No.	TOTAL SHEETS
03	Pla	80	5.1/14.5	19	59

REGISTERED CIVIL ENGINEER 6-3-11 DATE

6-13-11
PLANS APPROVAL DATE

REGISTERED PROFESSIONAL ENGINEER
Joyce K. Loftus
No. 38426
Exp. 3-31-13
CIVIL
STATE OF CALIFORNIA

THE STATE OF CALIFORNIA OR ITS OFFICERS OR AGENTS SHALL NOT BE RESPONSIBLE FOR THE ACCURACY OR COMPLETENESS OF SCANNED COPIES OF THIS PLAN SHEET.

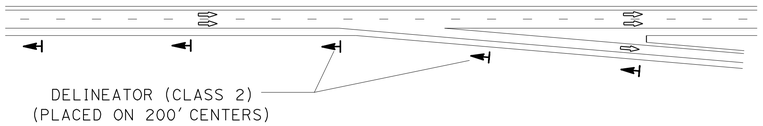

EXIT RAMP DELINEATOR PLACEMENT (TYPICAL)

NO SCALE

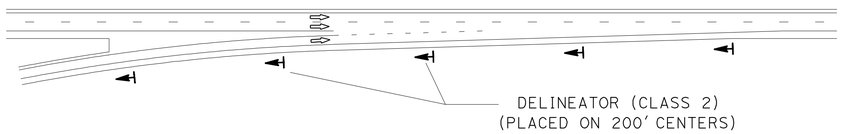

ENTRANCE RAMP DELINEATOR PLACEMENT (TYPICAL)

NO SCALE

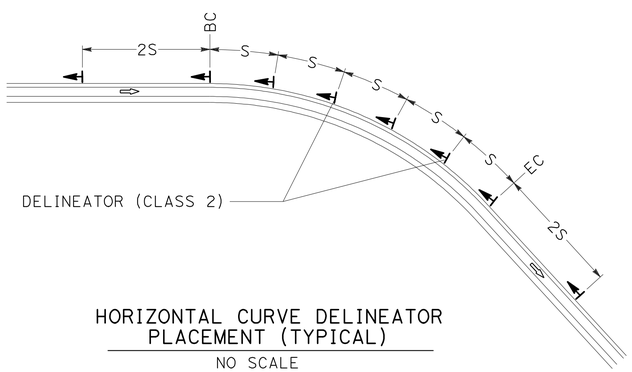

HORIZONTAL CURVE DELINEATOR PLACEMENT (TYPICAL)

NO SCALE

LEGEND

S DELINEATOR SPACING (TO BE PROVIDED BY THE ENGINEER)

⇨ DIRECTION OF TRAVEL

DELINEATOR - OBJECT MARKER

DESCRIPTION	DELINEATOR (CLASS 1) TYPE F (EACH)	OBJECT MARKER TYPE L-1 (EACH)
WB MAINLINE ROUTE 80		12
EB MAINLINE ROUTE 80		7
EB EXIT RAMP TO ROCKLIN RD	5	
WB ENTRANCE RAMP FROM ROCKLIN RD	5	
EB ENTRANCE RAMP FROM ROCKLIN RD	8	
WB EXIT RAMP TO ROCKLIN RD	5	
WB EXIT RAMP TO SIERRA COLLEGE Blvd	5	
EB ENTRANCE RAMP FROM SIERRA COLLEGE Blvd	5	
EB EXIT RAMP TO SIERRA COLLEGE Blvd	5	
WB ENTRANCE RAMP FROM SIERRA COLLEGE Blvd	5	
EB ENTRANCE RAMP FROM HORSESHOE BAR RD	5	
WB EXIT RAMP TO HORSESHOE BAR RD	5	
EB EXIT RAMP TO HORSESHOE BAR RD	5	
EB ENTRANCE RAMP FROM HORSESHOE BAR RD	5	
WB EXIT RAMP TO PENRYN RD	5	
EB ENTRANCE RAMP FROM PENRYN RD	5	
WB ENTRANCE RAMP FROM PENRYN RD	5	
EB EXIT RAMP TO PENRYN RD	5	
WB ENTRANCE RAMP FROM ROUTE 193	5	
MAINLINE CURVE BC=PM 12.93, S=160 ft	14	
TOTAL	102	19

NOTE:

1. EXACT LOCATION OF DELINEATORS AND OBJECT MARKERS TO BE DETERMINED BY THE ENGINEER.

PAVEMENT DELINEATION QUANTITIES

PDQ-2

STATE OF CALIFORNIA - DEPARTMENT OF TRANSPORTATION
Caltrans
TRAFFIC

FUNCTIONAL SUPERVISOR: LAURIE LAMMERT
CALCULATED-DESIGNED BY: JOYCE LOFTUS
CHECKED BY:
REVISED BY:
DATE REVISED:

LAST REVISION 06-09-11
DATE PLOTTED => 19-JUL-2011
TIME PLOTTED => 10:29

Dist	COUNTY	ROUTE	POST MILES TOTAL PROJECT	SHEET No.	TOTAL SHEETS
03	Pla	80	5.1/14.5	20	59

Davinder Minhas 6-3-11
REGISTERED CIVIL ENGINEER DATE

6-13-11
PLANS APPROVAL DATE

REGISTERED PROFESSIONAL ENGINEER
DAVINDER K MINHAS
No. 70022
Exp 9-30-12
CIVIL
STATE OF CALIFORNIA

THE STATE OF CALIFORNIA OR ITS OFFICERS OR AGENTS SHALL NOT BE RESPONSIBLE FOR THE ACCURACY OR COMPLETENESS OF SCANNED COPIES OF THIS PLAN SHEET.

ROADWAY QUANTITIES

DIRECTION EB/WB	APPROXIMATE PM FROM	TO	COLD PLANE AC PAVEMENT (0.10' Max) SQYD	RUBBERIZED HOT MIX ASPHALT (OPEN GRADED) TON	TACK COAT TON	ASPHALTIC EMULSION (FOG SEAL COAT) TON	CRACK TREATMENT LNMI	NOTES
EB	5.10	5.69	13,678	684	3.83	2.03	1.46	BEGIN PROJECT TO BEGIN ROCKLIN Rd EXIT RAMP WIDENING
	5.69	5.90	6,091	305	1.71	0.60	0.73	BEGIN EXIT RAMP WIDENING
	5.90	6.04	4,181	209	1.17	0.42	0.35	ROCKLIN Rd EXIT RAMP TO UC
	6.04	6.10	0	0	0.00	0.10	0.00	* FOG SEAL ASPHALT CONCRETE SHOULDERS
	6.10	6.37	6,687	334	1.87	0.89	0.66	UC TO ROCKLIN Rd ENTRANCE RAMP MERGE POINT
	6.37	7.04	15,837	792	4.43	1.98	1.69	SIERRA COLLEGE Blvd - BEGIN EXIT RAMP
	7.04	7.23	4,279	214	1.20	0.28	0.48	** COLD PLANE AND OVERLAY UP TO OUTSIDE ETW
	7.23	7.52	0	0	0.00	0.00	0.00	SKIP
	7.52	7.84	6,923	346	1.94	0.46	0.80	** COLD PLANE AND OVERLAY UP TO OUTSIDE ETW
	7.84	8.70	20,311	1,016	5.69	2.54	2.14	SIERRA COLLEGE Blvd ENTRANCE RAMP TO HORSESHOE BAR Rd EXIT RAMP
	8.70	8.98	8,373	420	2.35	0.90	0.80	HORSESHOE BAR Rd EXIT RAMP TO ENTRANCE RAMP
	8.98	10.09	25,973	1,299	7.27	3.25	2.78	HORSESHOE BAR Rd ENTRANCE RAMP TO PENRYN Rd EXIT RAMP
	10.09	10.40	9,507	475	2.67	0.95	0.88	PENRYN Rd EXIT RAMP TO ENTRANCE RAMP
	10.40	11.36	22,399	1,120	6.27	2.80	2.30	PENRYN Rd ENTRANCE RAMP TO PENRYN ROCK SPRINGS UC
	11.36	11.45	0	0	0.00	0.14	0.00	* FOG SEAL ASPHALT CONCRETE SHOULDERS
	11.45	13.57	49,872	2,494	13.96	6.35	5.30	
	13.57	13.91	0	0	0.00	0.00	0.00	SKIP
	13.91	14.26	8,189	410	2.29	1.02	0.88	APPROACHING 80/193 SEPARATION UC
	14.26	14.33	0	0	0.00	0.14	0.00	* FOG SEAL ASPHALT CONCRETE SHOULDERS
SUBTOTAL (EB)			202,300	10,118	56.65	24.85	21.25	
WB	5.10	5.71	14,064	703	3.94	1.76	1.52	BEGIN PROJECT TO ROCKLIN Rd ENTRANCE RAMP MERGE
	5.71	6.02	9,201	460	2.58	0.92	0.79	ROCKLIN Rd ENTRANCE RAMP - MERGE POINT TO UC
	6.02	6.09	0	0	0.00	0.14	0.00	* FOG SEAL ASPHALT CONCRETE SHOULDERS
	6.09	6.98	21,926	1,096	6.14	2.60	2.22	ROCKLIN Rd UC TO SIERRA COLLEGE Blvd ENTRANCE RAMP MERGE
	6.98	7.32	7,617	381	2.13	0.50	0.85	** COLD PLANE AND OVERLAY UP TO OUTSIDE ETW
	7.32	7.61	0	0	0.00	0.00	0.00	SKIP
	7.61	7.77	3,579	179	1.00	0.24	0.39	** COLD PLANE AND OVERLAY UP TO OUTSIDE ETW
	7.77	7.90	3,952	198	1.11	0.39	0.44	SIERRA COLLEGE Blvd EXIT RAMP TO BEGINNING OF WIDENING
	7.90	8.47	13,326	666	3.73	1.67	1.44	BEGINNING OF RAMP WIDENING TO HORSESHOE BAR Rd ENTRANCE RAMP MERGE
	8.47	10.30	44,912	2,246	12.58	5.37	4.59	HORSESHOE BAR Rd ENTRANCE RAMP MERGE TO PENRYN Rd ENTRANCE RAMP MERGE
	10.30	10.61	9,601	480	2.69	0.91	0.78	PENRYN Rd ENTRANCE RAMP MERGE TO PENRYN Rd EXIT RAMP
	10.61	11.37	17,747	888	4.97	2.22	1.89	PENRYN Rd EXIT RAMP TO PENRYN ROCK SPRINGS UC
	11.37	11.45	0	0	0.00	0.14	0.00	*
	11.45	13.57	49,831	2,492	13.95	6.23	5.31	
	13.57	14.31	0	0	0.00	0.00	0.00	SKIP - APPROACHING 80/193 SEPARATION
	14.31	14.33	0	0	0.00	0.05	0.00	* FOG SEAL ASPHALT CONCRETE SHOULDERS
	14.33	14.41	1,981	99	0.56	0.25	0.21	80/193 SEPARATION UC TO END OF PROJECT
SUBTOTAL (WB)			197,737	9,888	55.38	23.39	20.43	
RAMPS (TABLE)			10,910	611	3.41	1.98	0.30	
TOTAL			410,947	20,617	115.44	50.22	41.98	

* SEE REPLACE AC SURFACING TABLE, NO RHMA-O AT THIS LOCATION
** FOG SEAL MEDIAN SHOULDERS ONLY

ABBREVIATION:

LNMI LANE MILE

SUMMARY OF QUANTITIES

Q-1

STATE OF CALIFORNIA - DEPARTMENT OF TRANSPORTATION
Caltrans® DIVISION OF ENGINEERING
FUNCTIONAL SUPERVISOR: DEANN SPANGLER
CALCULATED-DESIGNED BY: DAVINDER MINHAS
CHECKED BY: DAVID MERRIMAN
REVISED BY
DATE REVISED

LAST REVISION 6-6-11
DATE PLOTTED => 14-JUN-2011
TIME PLOTTED => 06:39

Dist	COUNTY	ROUTE	POST MILES TOTAL PROJECT	SHEET No.	TOTAL SHEETS
03	Pla	80	5.1/14.5	21	59

Davinder Minhas 6-3-11
REGISTERED CIVIL ENGINEER DATE

6-13-11
PLANS APPROVAL DATE

REGISTERED PROFESSIONAL ENGINEER
DAVINDER K MINHAS
No. 70022
Exp 9-30-12
CIVIL
STATE OF CALIFORNIA

THE STATE OF CALIFORNIA OR ITS OFFICERS OR AGENTS SHALL NOT BE RESPONSIBLE FOR THE ACCURACY OR COMPLETENESS OF SCANNED COPIES OF THIS PLAN SHEET.

ABBREVIATION:

LNMI LANE MILE

REPLACE AC SURFACING

DIRECTION EB/WB	APPROXIMATE PM FROM	TO	LANE No.	(N) WIDTH LF	(N) DEPTH LF	REPLACE AC SURFACING CY	NOTES
EB	5.10	5.49	3	6	0.30	134	
	5.49	5.59	3	12	0.30	69	
	5.59	5.66	3	6	0.30	25	
	5.66	5.84	3	12	0.30	129	
	5.84	6.00	3	6	0.30	56	
	6.00	6.04	3	12	0.30	24	
	6.04	6.05	1,2,3	36	0.22	29	APPROACHING ROCKLIN Rd UC
	6.06	6.06		10	0.25	5	OUTSIDE AC SHOULDER - ADJACENT TO APPROACH SLAB
	6.08	6.10	1,2,3	36	0.22	29	DEPARTING ROCKLIN Rd UC
	6.10	6.10		10	0.25	7	OUTSIDE AC SHOULDER - ADJACENT TO DEPARTURE SLAB
	6.10	6.16	3	12	0.30	44	
	6.16	7.23	3	6	0.30	376	
	7.23	7.52					SKIP
	7.52	11.36	3	6	0.30	1,350	
	11.36	11.38	1,2,3	36	0.22	29	APPROACHING PENRYN ROCK SPRINGS UC
	11.43	11.45	1,2,3	36	0.22	29	DEPARTING PENRYN ROCK SPRINGS UC
	11.45	12.72	3	6	0.30	448	
	12.72	12.73	3	12	0.30	6	
	12.73	12.82	3	6	0.30	31	
	12.82	12.83	3	12	0.30	10	
	12.83	13.20	3	6	0.30	130	
	13.20	13.45	3	12	0.30	176	
	13.45	13.57	3	6	0.30	44	
	13.57	13.91					SKIP
	13.91	14.26	3	6	0.30	123	
	14.26	14.28	1,2.3	36	0.22	29	APPROACHING 80/193 SEPARATION UC
	14.31	14.33	1,2,3	41-48	0.22	30	DEPARTING 80/193 SEPARATION UC
SUBTOTAL (EB)						3,362	
WB	5.10	6.02	3	6	0.30	322	
	6.02	6.04	1,2,3	36	0.22	29	DEPARTING ROCKLIN Rd UC
	6.07	6.09	1,2,3	36	0.22	29	APPROACHING ROCKLIN Rd UC
	6.09	7.32	3	6	0.30	432	
	7.32	7.61					SKIP
	7.61	7.77	3	6	0.30	57	REPLACE AC SURFACING FROM CENTER LINE OF No. 3 LANE TO OUTSIDE ETW
	7.77	11.37	3	6	0.30	1,268	
	11.37	11.39	1,2,3	36	0.22	29	DEPARTING PENRYN ROCK SPRINGS UC
	11.43	11.45	1,2,3	36	0.22	29	APPROACHING PENRYN ROCK SPRINGS UC
	11.45	13.57	3	6	0.30	748	
	13.57	14.30					SKIP
	14.31	14.33	1,2,3	36-71	0.22	45	REPLACE AC SURFACING FROM INSIDE ETW TO OUTSIDE ETW @ THE RAMP
	14.33	14.41	3	6	0.30	31	
SUBTOTAL (WB)						3,019	
RAMPS (TABLE)						1,825	
TOTAL						8,206	

(N) - NOT A SEPARATE PAY ITEM, FOR INFORMATION ONLY

RAMP QUANTITIES

DIRECTION EB/WB	LOCATION		(N) AREA SF	(N) DEPTH LF	REPLACE AC SURFACING CY	COLD PLANE AC PAVEMENT (0.10' Max) SQYD	RUBBERIZED HOT MIX ASPHALT (OPEN GRADED) TON	TACK COAT TON	ASPHALTIC EMULSION (FOG SEAL COAT) TON	CRACK TREATMENT LNMI
EB	ROCKLIN ROAD	EXIT	9,132	0.25	85	2,847	143	0.80	0.29	0.30
		ENTRANCE	15,783	0.25	146	1,575	79	0.44	0.16	
	HORSESHOE BAR ROAD	EXIT	15,304	0.25	142	299	18	0.10	0.17	
		ENTRANCE	17,737	0.25	164	319	21	0.12	0.19	
	PENRYN ROAD	EXIT	10,588	0.25	98	288	29	0.16	0.10	
		ENTRANCE	11,604	0.25	107	327	21	0.11	0.08	
WB	ROCKLIN ROAD	EXIT	33,220	0.25	308	2,538	127	0.71	0.36	
		ENTRANCE	23,858	0.25	221	1,391	70	0.40	0.11	
	HORSESHOE BAR ROAD	EXIT	17,146	0.25	159	331	20	0.11	0.13	
		ENTRANCE	17,497	0.25	162	347	34	0.19	0.18	
	PENRYN ROAD	EXIT	11,288	0.25	105	306	29	0.16	0.10	
		ENTRANCE	13,476	0.25	125	342	20	0.11	0.08	
	80/193 SEPARATION	ENTRANCE	204	0.25	2				0.03	
	SUBTOTAL				1,825	10,910	611	3.41	1.98	0.30
	TOTAL				*	**	**	**	**	**

* SEE REPLACE AC SURFACING TABLE (ON THIS SHEET) FOR TOTAL QUANTITY
** SEE SUMMARY OF QUANTITIES SHEET Q-1 FOR TOTAL QUANTITY

SUMMARY OF QUANTITIES

Q-2

STATE OF CALIFORNIA - DEPARTMENT OF TRANSPORTATION
Caltrans DIVISION OF ENGINEERING

FUNCTIONAL SUPERVISOR: DEANN SPANGLER
CALCULATED-DESIGNED BY: DAVINDER MINHAS
CHECKED BY: DAVID MERRIMAN
REVISED BY
DATE REVISED

LAST REVISION 6-6-11
DATE PLOTTED => 14-JUN-2011
TIME PLOTTED => 06:39

Dist	COUNTY	ROUTE	POST MILES TOTAL PROJECT	SHEET No.	TOTAL SHEETS
03	Pla	80	5.1/14.5	22	59

Davinder Minhas 6-3-11
REGISTERED CIVIL ENGINEER DATE

6-13-11
PLANS APPROVAL DATE

REGISTERED PROFESSIONAL ENGINEER DAVINDER K MINHAS No. 70022 Exp 9-30-12 CIVIL STATE OF CALIFORNIA

THE STATE OF CALIFORNIA OR ITS OFFICERS OR AGENTS SHALL NOT BE RESPONSIBLE FOR THE ACCURACY OR COMPLETENESS OF SCANNED COPIES OF THIS PLAN SHEET.

METAL BEAM GUARD RAILING

DIRECTION	APPROXIMATE PM		LOCATION DESCRIPTION	EXISTING MBGR OR BARRIER				MBGR OR BARRIER														(N)
								LEADING END				RAILING OR BARRIER				TRAILING END						
				REMOVE MBGR	REMOVE TERMINAL SECTION	(N) REMOVE END ANCHOR ASSEMBLY	(N) REMOVE BURIED POST END ANCHOR	MODIFIED ALTERNATIVE FLARED TERMINAL SYSTEM	(N) CONNECTIONS TO BRIDGE RAILINGS	MODIFIED TRANSITION RAILING (TYPE WB)	(N) **CONCRETE END BLOCK	(N) BURIED POST END ANCHOR	MODIFIED METAL BEAM GUARD RAILING	(N) RECONSTRUCT METAL BEAM GUARD RAILING HEIGHT	RECONSTRUCT METAL BEAM GUARD RAILING	(N) CONNECTIONS TO BRIDGE RAILINGS	MODIFIED END ANCHOR ASSEMBLY (TYPE SFT)	(N) ** CONCRETE END BLOCK (MODIFIED)	** MINOR CONCRETE (MINOR STRUCTURE)	VEGETATION CONTROL (MINOR CONCRETE)	END CAP (TYPE A)	GUARD RAILING LAYOUT TYPE
EB/WB	FROM	TO		LF	EA	EA	EA	EA	EA	EA	EA	EA	LF	IN	LF	EA	EA	EA	CY	SQYD	EA	
EB	5.72	5.72	"ROCKLIN ROAD EXIT ONLY" SIGN		1	1		1						31	37.5		1			58		16B
EB	5.88	5.88	"ROCKLIN ROAD EXIT ONLY" SIGN		1	1		1						31	50.0		1			62		16B
EB	6.00	6.06	ROCKLIN ROAD UC (APPROACH)	25.0	1			1	1	1	1			31	200.0				1.51	141		12B
EB	6.09	6.18	ROCKLIN ROAD UC (DEPARTURE)			1								31	475.0	1	1	1	1.49	217	1	12DD
EB	10.59	10.74			1	1		1						31	762.5		1			386		11B
EB	11.33	11.39	ROCK SPRINGS ROAD UC (APPROACH)	25.0	1			1	1	1	1			31	125.0				1.51	108		12B
EB	11.60	11.85			1	1		1						31	1,287.5		1			626		11B
EB	12.03	12.03	CHANGEABLE MESSAGE SIGN			1	1					1		31	75.0		1			40		16C
EB	12.70	12.81			1	1		1						31	562.5		1			296		11B
EB	13.03	13.27		250.0		1	1					1	250.0	31	1,012.5		1			576		11C
EB	13.39	13.47				1	1					1		31	425.0		1			194		11C
EB	13.53	13.58	"NEWCASTLE ROAD" EXIT SIGN		1	1		1						31	200.0		1			136		16B
EB	14.21	14.30	ROUTE 193 UC (APPROACH)	225.0			1		1	1	1	1	200.0	31	137.5				1.51	165		12C
WB	6.06	6.10	ROCKLIN ROAD UC (APPROACH)	25.0	1			1	1	1	1								1.51	51		12B
WB	9.74	9.74	"HORSESHOE BAR RD 1 MILE" SIGN	12.5	1	1		1					12.5	31	25.0		1			62		16B
WB	10.65	10.65	"PENRYN ROAD" EXIT SIGN	12.5	1	1		1					12.5	31	25.0		1			62		16B
WB	11.43	11.44	PENRYN ROCK SPRINGS UC (APPROACH)	25.0	1			1	1	1	1								1.51	51		12B
WB	11.66	11.87		100.0	1	1		1					100.0	31	962.5		1			524		11B
WB	12.60	12.74	"SACRAMENTO 29 SAN FRANCISCO 115" SIGN		1	1		1						31	712.5		1			364		11B
WB	14.34	ON-RAMP	ROUTE 193 UC (APPROACH)	25.0	1			1	1	1	1			31	37.5				1.51	68		12B
SUBTOTAL				725.0	15	14	4	15	6	6	6	4	575.0		7,112.5	1	14	1	10.55	4,187	1	
TOTAL				725.0	15			15		6			575.0		7,112.5		14		10.55	4,187	1	

(N) - NOT A SEPARATE PAY ITEM, FOR INFORMATION ONLY

SUMMARY OF QUANTITIES

Q-3

STATE OF CALIFORNIA - DEPARTMENT OF TRANSPORTATION
Caltrans® DIVISION OF ENGINEERING

FUNCTIONAL SUPERVISOR: DEANN SPANGLER
CALCULATED-DESIGNED BY: DAVINDER MINHAS
CHECKED BY: DAVID MERRIMAN
REVISED BY
DATE REVISED

LAST REVISION 6-6-11
DATE PLOTTED => 14-JUN-2011
TIME PLOTTED => 06:40

Dist	COUNTY	ROUTE	POST MILES TOTAL PROJECT	SHEET No.	TOTAL SHEETS
03	Pla	80	5.1/14.5	23	59

Davinder Minhas 6-3-11
REGISTERED CIVIL ENGINEER DATE

6-13-11
PLANS APPROVAL DATE

REGISTERED PROFESSIONAL ENGINEER
DAVINDER K MINHAS
No. 70022
Exp. 9-30-12
CIVIL
STATE OF CALIFORNIA

THE STATE OF CALIFORNIA OR ITS OFFICERS OR AGENTS SHALL NOT BE RESPONSIBLE FOR THE ACCURACY OR COMPLETENESS OF SCANNED COPIES OF THIS PLAN SHEET.

TEMPORARY EROSION CONTROL

TEMPORARY FIBER ROLL	TEMPORARY DRAINAGE INLET PROTECTION	TEMPORARY CONCRETE WASHOUT (PORTABLE)
LF	EA	LS
4800	22	1

DIKE

DIRECTION	APPROXIMATE PM		REMOVE AC DIKE	PLACE HMA DIKE					MINOR HMA	NOTES
				TYPE A	TYPE C	TYPE D	TYPE E	TYPE F		
EB/WB	FROM	TO	LF	LF	LF	LF	LF	LF	TON	
	AT MBGR LOCATIONS									
EB	6.09	6.18	475.0					475.0	7.0	
EB	10.59	10.74	835.0		72.0			763.0	11.7	
EB	12.70	12.81	626.0		46.0			580.0	8.8	17′ OF ALTERNATIVE FLARED TERMINAL SYSTEM TO HAVE DIKE (TYPE F) IN FRONT OF IT.
EB	13.39	13.47	405.0					405.0	5.9	ONLY REMOVE AND REPLACE Exist DIKE (TYPE F).
EB	14.21	14.30	300.0					300.0	4.4	ONLY REMOVE AND REPLACE Exist DIKE (TYPE F).
WB	6.06	6.10	62.5					62.5	1.0	ONLY REMOVE AND REPLACE Exist DIKE (TYPE F).
WB	11.43	11.44	52.0		38.0			14.0	0.5	REPLACE 52′ DIKE (TYPE C) WITH 14′ DIKE (TYPE F) AND 38′ DIKE (TYPE C).
WB	11.66	11.87	1,120.0		42.0			1078.0	16.0	REPLACE 25′ OF DIKE (TYPE C) BEFORE THE OVERSIDE DRAIN WITH A DIKE (TYPE F).
WB	12.60	12.74	702.0					702.0	10.2	
	ALONG MAINLINE									
EB	11.41	11.47	284.0			284.0			18.3	
EB	12.65	12.68	180.0				180.0		5.2	
EB	12.82	13.02	1,141.0	995.0		146.0			39.0	
EB	13.27	13.39	594.0	594.0					17.7	
EB	14.08	14.21	640.0	478.0		162.0			24.7	
WB	11.22	11.29	370.0	370.0					11.0	
	AT RAMPS									
WB	ROCKLIN ROAD EXIT		719.0				719.0		20.6	
WB	ROCKLIN ROAD ENTRANCE		395.0	395.0					11.7	
SUBTOTAL			8,900.5	2,832.0	198.0	592.0	899.0	4,379.5	213.7	
ASPHALT CONCRETE OVERSIDE DRAIN TABLE									74.9	
TOTAL			8,900.5	2,832.0	198.0	592.0	899.0	4,379.5	288.6	

SUMMARY OF QUANTITIES

Q-4

STATE OF CALIFORNIA - DEPARTMENT OF TRANSPORTATION
Caltrans® DIVISION OF ENGINEERING

FUNCTIONAL SUPERVISOR: DEANN SPANGLER
CALCULATED-DESIGNED BY: DAVINDER MINHAS
CHECKED BY: DAVID MERRIMAN
REVISED BY
DATE REVISED

LAST REVISION 6-6-11
DATE PLOTTED => 14-JUN-2011
TIME PLOTTED => 06:40

Dist	COUNTY	ROUTE	POST MILES TOTAL PROJECT	SHEET No.	TOTAL SHEETS
03	Pla	80	5.1/14.5	24	59

Davinder Minhas 6-3-11
REGISTERED CIVIL ENGINEER DATE

6-13-11
PLANS APPROVAL DATE

REGISTERED PROFESSIONAL ENGINEER
DAVINDER K MINHAS
No. 70022
Exp 9-30-12
CIVIL
STATE OF CALIFORNIA

THE STATE OF CALIFORNIA OR ITS OFFICERS OR AGENTS SHALL NOT BE RESPONSIBLE FOR THE ACCURACY OR COMPLETENESS OF SCANNED COPIES OF THIS PLAN SHEET.

IMPORTED MATERIAL (SHOULDER BACKING)

DIRECTION	APPROXIMATE PM		IMPORTED MATERIAL (SHOULDER BACKING)	NOTES
EB/WB	FROM	TO	TON	
EB	5.42	5.47	74.3	Exist DIKE (TYPE D)
	5.79	5.82	16.7	Exist DIKE (TYPE A)
	5.97	6.00	19.5	Exist DIKE (TYPE D)
	6.19	6.21	17.7	Exist DIKE (TYPE E)
	6.25	6.30	37.2	Exist DIKE (TYPE A)
	6.42	6.50	94.8	Exist DIKE (TYPE D)
	6.59	6.61	21.1	Exist DIKE (TYPE D)
	6.77	6.83	91.5	Exist DIKE (TYPE D)
	6.83	6.94	40.0	Exist DIKE (TYPE D)
	7.98	7.99	9.6	Exist DIKE (TYPE D)
	8.49	8.61	40.8	Exist DIKE (TYPE E)
	9.19	9.30	125.4	Exist DIKE (TYPE E)
	10.36	10.39	13.0	Exist DIKE (TYPE D)
	10.53	10.59	24.2	Exist DIKE (TYPE D)
	10.85	10.88	12.7	Exist DIKE (TYPE E)
	10.92	11.00	44.9	Exist DIKE (TYPE A)
	11.00	11.10	109.4	Exist DIKE (TYPE D)
	11.10	11.16	24.1	Exist DIKE (TYPE A)
	11.16	11.32	178.4	Exist DIKE (TYPE E)
	11.41	11.47	79.9	Exist DIKE (TYPE D)
	12.85	13.04	70.0	Exist DIKE (TYPE A)
SUBTOTAL EB			1,145.2	
WB				
	8.47	8.52	27.9	Exist DIKE (TYPE D)
	9.96	10.00	7.9	Exist DIKE (TYPE D)
	10.00	10.05	7.1	Exist DIKE (TYPE E)
	10.63	10.64	1.7	Exist DIKE (TYPE F)
	10.65	10.71	15.6	Exist DIKE (TYPE A)
	10.71	10.76	27.9	Exist DIKE (TYPE D)
	11.04	11.06	4.5	Exist DIKE (TYPE A)
	11.54	11.62	11.9	Exist DIKE (TYPE A)
	11.88	11.95	26.0	Exist DIKE (TYPE A)
	12.20	12.21	3.7	Exist DIKE (TYPE A)
	12.21	12.24	23.8	Exist DIKE (TYPE D)
	12.53	12.57	5.8	Exist DIKE (TYPE D)
	12.57	12.60	15.8	Exist DIKE (TYPE D)
	12.93	13.13	221.0	Exist DIKE (TYPE A)
	13.13	13.19	33.7	Exist DIKE (TYPE D)
	13.19	13.26	10.4	Exist DIKE (TYPE A)
	13.26	13.35	14.1	Exist DIKE (TYPE A)
	13.43	13.51	14.9	Exist DIKE (TYPE A)
SUBTOTAL WB			473.7	
TOTAL			1,618.9	

OVERSIDE DRAIN

DIRECTION	APPROXIMATE PM	REMOVE AC OVERSIDE DRAIN	(N) OVERSIDE DRAIN (CASE #) **	(N) LENGTH	PLACE HMA (MISCELLANEOUS AREA)	MINOR HMA
EB/WB		EA		LF	SQYD	TON
EB	5.78	1	2	4	6.6	2.2
	6.27	1	1	4	5.7	1.9
	6.40	1	2	6	6.6	2.2
	6.51	1	1	4	5.7	1.9
	6.59	1	4	6	1.8	0.4
	6.68	1	2	4	6.6	2.2
	6.77	1	2	4	6.6	2.2
	6.83	1	1	4	5.7	1.9
	7.99	1	1	6	5.7	1.9
	8.27	1	1	4	5.7	1.9
	8.97	1	4	6	1.8	0.4
	9.19	1	4	6	1.8	0.4
	10.51	1	4	6	1.8	0.4
	10.92	1	4	6	1.8	0.4
	11.85	1	1	4	5.7	1.9
	11.89	1	4	6	1.8	0.4
	12.64	1	2	4	6.6	2.2
	12.67	1	1	4	5.7	1.9
	12.84	1	4	6	1.8	0.4
	13.27	1	2	4	6.6	2.2
	13.48	1	2	4	6.6	2.2
	14.09	1	1	4	5.7	1.9
SUBTOTAL EB		22			104.4	33.4
WB	5.22	1	2	4	6.6	2.2
	5.35	1	2	4	6.6	2.2
	5.54	1	4	6	1.8	0.4
	6.47	1	2	6	6.6	2.2
	6.54	1	2	25	6.6	2.2
	6.72	1	2	4	6.6	2.2
	6.88	1	2	4	6.6	2.2
	8.00	1	2	4	6.6	2.2
	8.11	1	1	4	5.7	1.9
	8.32	1	2	6	6.6	2.2
	9.04	1	2	4	6.6	2.2
	9.22	1	2	4	6.6	2.2
	9.80	1	2	1	6.6	2.2
	9.96	1	4	6	1.8	0.4
	10.71	1	1	6	5.7	1.9
	10.76	1	4	6	1.8	0.4
	11.17	1	2	6	6.6	2.2
	12.91	1	4	6	1.8	0.4
	13.08	1	4	6	1.8	0.4
	13.17	1	1	4	5.7	1.9
	13.37	1	2	4	6.6	2.2
	13.44	1	2	4	6.6	2.2
SUBTOTAL WB		22			118.5	38.5
SUBTOTAL EB & WB		44			222.9	71.9
TOTAL		44			222.9	*

* SEE SUMMARY OF QUANTITIES SHEET Q-4 FOR TOTAL QUANTITY OF MINOR HMA
** SEE CONSTRUCTION DETAIL SHEET C-14 FOR DIFFERENT OVERSIDE DRAIN CASES
(N) - NOT A SEPARATE PAY ITEM, FOR INFORMATION ONLY

SUMMARY OF QUANTITIES
Q-5

STATE OF CALIFORNIA - DEPARTMENT OF TRANSPORTATION
Caltrans® DIVISION OF ENGINEERING
FUNCTIONAL SUPERVISOR: DEANN SPANGLER
CALCULATED-DESIGNED BY: DAVINDER MINHAS
CHECKED BY: DAVID MERRIMAN
REVISED BY
DATE REVISED

LAST REVISION 6-6-11
DATE PLOTTED => 14-JUN-2011
TIME PLOTTED => 06:40

Dist	COUNTY	ROUTE	POST MILES TOTAL PROJECT	SHEET No.	TOTAL SHEETS
03	Pla	80	5.1/14.5	25	59

LICENSED LANDSCAPE ARCHITECT

6-13-11
PLANS APPROVAL DATE

LICENSED LANDSCAPE ARCHITECT
JEFFREY PIETRZAK
No. 4457
SIGNATURE
12-31-11
Renewal Date
6-13-11
Date
STATE OF CALIFORNIA

THE STATE OF CALIFORNIA OR ITS OFFICERS OR AGENTS SHALL NOT BE RESPONSIBLE FOR THE ACCURACY OR COMPLETENESS OF SCANNED COPIES OF THIS PLAN SHEET.

EROSION CONTROL (COMPOST BLANKET)

ASSOCIATED WITH	DIRECTION	LOCATION (OUTSIDE/ MEDIAN)	PM FROM	PM TO	LOCATION DESCRIPTION	(N) AREA SQYD	EROSION CONTROL (COMPOST BLANKET) CY
OVERSIDE DRAIN	WB	OUTSIDE	5.22	-	BEGIN DIKE (TYPE A)	7	0.4
OVERSIDE DRAIN	WB	OUTSIDE	5.35	-	BEGIN DIKE (TYPE A)	7	0.4
OVERSIDE DRAIN	WB	OUTSIDE	5.54	-	BEGIN DIKE (TYPE A)	4	0.2
METAL BEAM GUARD RAIL	EB	-	5.72	5.72	"ROCKLIN ROAD EXIT ONLY" SIGN	34	2.0
OVERSIDE DRAIN	EB	OUTSIDE	5.78	-	BEGINNING OF DIKE (TYPE A)	7	0.4
METAL BEAM GUARD RAIL	EB	-	5.88	5.88	"ROCKLIN ROAD EXIT ONLY" SIGN	38	2.3
METAL BEAM GUARD RAIL	EB	-	6.00	6.06	ROCKLIN ROAD UC (APPROACH)	97	5.8
METAL BEAM GUARD RAIL	EB	-	6.09	6.18	ROCKLIN ROAD UC (DEPARTURE)	159	9.5
OVERSIDE DRAIN	EB	OUTSIDE	6.27	-	AT THE END OF EB 80 ROCKLIN Rd ON-RAMP	7	0.4
OVERSIDE DRAIN	EB	OUTSIDE	6.40	-	BEGINNING OF DIKE (TYPE D)	8	0.5
OVERSIDE DRAIN	WB	OUTSIDE	6.47	-	END OF DIKE (TYPE A)	8	0.5
OVERSIDE DRAIN	EB	OUTSIDE	6.51	-	AT THE END OF DIKE (TYPE D) AND BEGIN OF DIKE (TYPE A)	7	0.4
OVERSIDE DRAIN	WB	OUTSIDE	6.54	-	BEGIN DIKE (TYPE A)	21	1.3
OVERSIDE DRAIN	EB	OUTSIDE	6.59	-	END OF DIKE (TYPE A) AND BEGIN OF DIKE (TYPE D)	4	0.2
OVERSIDE DRAIN	EB	OUTSIDE	6.68	-	END DIKE (TYPE A)	7	0.4
OVERSIDE DRAIN	WB	OUTSIDE	6.72	-	END OF DIKE (TYPE A)	7	0.4
OVERSIDE DRAIN	EB	OUTSIDE	6.77	-	BEGIN DIKE (TYPE D)	7	0.4
OVERSIDE DRAIN	EB	OUTSIDE	6.83	-	END OF DIKE (TYPE D) AND BEGIN OF DIKE (TYPE D)	7	0.4
OVERSIDE DRAIN	WB	OUTSIDE	6.88	-	BEGIN DIKE (TYPE E)	7	0.4
OVERSIDE DRAIN	EB	OUTSIDE	7.99	-	END OF DIKE (TYPE D) AND BEGIN OF DIKE (TYPE A)	8	0.5
OVERSIDE DRAIN	WB	OUTSIDE	8.00	-	BEGIN DIKE (TYPE D)	7	0.4
OVERSIDE DRAIN	WB	OUTSIDE	8.11	-	END OF DIKE (TYPE D) AND BEGIN OF DIKE (TYPE A)	7	0.4
OVERSIDE DRAIN	EB	OUTSIDE	8.27	-	DIKE (TYPE D) BEFORE AND AFTER THE OVERSIDE DRAIN	7	0.4
OVERSIDE DRAIN	WB	OUTSIDE	8.32	-	BEGIN DIKE (TYPE A)	8	0.5
OVERSIDE DRAIN	EB	OUTSIDE	8.97	-	BEGINNING OF DIKE (TYPE A)	4	0.2
OVERSIDE DRAIN	WB	OUTSIDE	9.04	-	BEGIN DIKE (TYPE A)	7	0.4
OVERSIDE DRAIN	EB	OUTSIDE	9.19	-	END OF DIKE (TYPE A) AND BEGIN OF DIKE (TYPE E)	4	0.2
OVERSIDE DRAIN	WB	OUTSIDE	9.22	-	END OF DIKE (TYPE A)	7	0.4
OVERSIDE DRAIN	WB	OUTSIDE	9.80	-	END OF DIKE (TYPE A)	4	0.2
OVERSIDE DRAIN	WB	OUTSIDE	9.96	-	BEGIN DIKE (TYPE D)	4	0.2
OVERSIDE DRAIN	EB	OUTSIDE	10.51	-	BEGIN OF DIKE (TYPE E)	4	0.2
METAL BEAM GUARD RAIL	EB	-	10.59	10.74	EMBANKMENT	275	16.5

(N) - NOT A SEPARATE PAY ITEM, FOR INFORMATION ONLY

LANDSCAPE DETAILS
LD-1

STATE OF CALIFORNIA - DEPARTMENT OF TRANSPORTATION
Caltrans
LANDSCAPE ARCHITECTURE

SENIOR LANDSCAPE ARCHITECT: T. CHRIS JOHNSON

CALCULATED-DESIGNED BY: JEFFREY L. PIETRZAK
CHECKED BY: T. CHRIS JOHNSON

REVISED BY
DATE REVISED

LAST REVISION 00-00-00
DATE PLOTTED => 14-JUN-2011
TIME PLOTTED => 06:41

Dist	COUNTY	ROUTE	POST MILES TOTAL PROJECT	SHEET No.	TOTAL SHEETS
03	Pla	80	5.1/14.5	26	59

LICENSED LANDSCAPE ARCHITECT

6-13-11
PLANS APPROVAL DATE

LICENSED LANDSCAPE ARCHITECT
JEFFREY PIETRZAK
No. 4457
Signature
12-31-11
Renewal Date
6-13-11
Date
STATE OF CALIFORNIA

THE STATE OF CALIFORNIA OR ITS OFFICERS OR AGENTS SHALL NOT BE RESPONSIBLE FOR THE ACCURACY OR COMPLETENESS OF SCANNED COPIES OF THIS PLAN SHEET.

EROSION CONTROL (COMPOST BLANKET)

ASSOCIATED WITH	DIRECTION	LOCATION (OUTSIDE/ MEDIAN)	PM FROM	PM TO	LOCATION DESCRIPTION	(N) AREA SQYD	EROSION CONTROL (COMPOST BLANKET) CY
OVERSIDE DRAIN	WB	OUTSIDE	10.71	-	END OF DIKE (TYPE A) AND BEGIN OF DIKE (TYPE D)	8	0.5
OVERSIDE DRAIN	WB	OUTSIDE	10.76	-	END OF DIKE (TYPE E)	4	0.2
OVERSIDE DRAIN	EB	OUTSIDE	10.92	-	BEGIN OF DIKE (TYPE A)	4	0.2
OVERSIDE DRAIN	WB	OUTSIDE	11.17	-	BEGIN OF DIKE (TYPE A)	8	0.5
METAL BEAM GUARD RAIL	EB	-	11.33	11.39	ROCK SPRINGS ROAD UC (APPROACH)	72	4.3
METAL BEAM GUARD RAIL	EB	-	11.60	11.85	EMBANKMENT	451	27.1
OVERSIDE DRAIN	EB	OUTSIDE	11.85	-	OVERSIDE DRAIN BEFORE THE END OF MBGR	7	0.4
OVERSIDE DRAIN	EB	OUTSIDE	11.89	-	END OF DIKE (TYPE A) AND BEGIN OF DIKE (TYPE A)	4	0.2
METAL BEAM GUARD RAIL	EB	-	12.03	12.04	CHANGEABLE MESSAGE SIGN	26	1.6
METAL BEAM GUARD RAIL	EB	-	12.70	12.81	EMBANKMENT	209	12.5
OVERSIDE DRAIN	WB	OUTSIDE	12.91	-	BEGIN OF DIKE (TYPE A)	4	0.2
METAL BEAM GUARD RAIL	EB	-	13.03	13.27	EMBANKMENT	405	24.3
OVERSIDE DRAIN	WB	OUTSIDE	13.08	-	END OF DIKE (TYPE A) AND BEGIN OF DIKE (TYPE A)	4	0.2
OVERSIDE DRAIN	WB	OUTSIDE	13.17	-	END OF DIKE (TYPE D) AND BEGIN OF DIKE (TYPE D)	7	0.4
OVERSIDE DRAIN	WB	OUTSIDE	13.37	-	END OF DIKE A	7	0.4
METAL BEAM GUARD RAIL	EB	-	13.39	13.47	EMBANKMENT	142	8.5
OVERSIDE DRAIN	WB	OUTSIDE	13.44	-	BEGIN OF DIKE (TYPE A)	7	0.4
METAL BEAM GUARD RAIL	EB	-	13.53	13.58	"NEWCASTLE ROAD" EXIT SIGN	88	5.3
METAL BEAM GUARD RAIL	EB	-	14.21	14.30	ROUTE 193 UC (APPROACH)	122	7.3
METAL BEAM GUARD RAIL	WB	-	6.06	6.10	ROCKLIN ROAD UC (APPROACH)	30	1.8
METAL BEAM GUARD RAIL	WB	-	9.74	9.74	"HORSESHOE BAR RD 1 MILE" SIGN	30	1.8
METAL BEAM GUARD RAIL	WB	-	10.65	10.65	"PENRYN ROAD" EXIT SIGN	34	2.0
METAL BEAM GUARD RAIL	WB	-	11.43	11.44	ROCK SPRINGS UC (APPROACH)	30	1.8
METAL BEAM GUARD RAIL	WB	-	11.66	11.87	EMBANKMENT	376	22.6
METAL BEAM GUARD RAIL	WB	-	12.60	12.74	EMBANKMENT	259	15.5
OVERSIDE DRAIN	EB	OUTSIDE	12.64	-	BEGIN OF DIKE (TYPE E)	7	0.4
OVERSIDE DRAIN	EB	OUTSIDE	12.67	-	END OF DIKE (TYPE E) AND BEGIN OF DIKE (TYPE D)	7	0.4
OVERSIDE DRAIN	EB	OUTSIDE	12.84	-	END OF DIKE (TYPE D) AND BEGIN OF DIKE (TYPE A)	4	0.2
OVERSIDE DRAIN	EB	OUTSIDE	13.27	-	BEGIN DIKE (TYPE A) APPROXIMATELY 30′ EAST OF END MBGR	7	0.4
OVERSIDE DRAIN	EB	OUTSIDE	13.48	-	BEGIN OF DIKE (TYPE E)	7	0.4
OVERSIDE DRAIN	EB	OUTSIDE	14.09	-	END OF DIKE (TYPE A) AND BEGIN OF DIKE (TYPE D)	7	0.4
METAL BEAM GUARD RAIL	WB	-	14.34	ON-RAMP	ROUTE 193 UC (APPROACH)	43	2.6
					TOTAL	3209	193.0

(N) - NOT A SEPARATE PAY ITEM, FOR INFORMATION ONLY

STATE OF CALIFORNIA - DEPARTMENT OF TRANSPORTATION
Caltrans® LANDSCAPE ARCHITECTURE

SENIOR LANDSCAPE ARCHITECT: T. CHRIS JOHNSON
CALCULATED-DESIGNED BY: JEFFREY L. PIETRZAK
CHECKED BY: T. CHRIS JOHNSON
REVISED BY
DATE REVISED

LANDSCAPE DETAILS
LD-2

LAST REVISION 00-00-00
DATE PLOTTED => 14-JUN-2011
TIME PLOTTED => 06:41

Dist	COUNTY	ROUTE	POST MILES TOTAL PROJECT	SHEET No.	TOTAL SHEETS
03	Pla	80	5.1/14.5	27	59

R. P. Gill 6-13-11
REGISTERED ELECTRICAL ENGINEER DATE

6-13-11
PLANS APPROVAL DATE

REGISTERED PROFESSIONAL ENGINEER RUPINDER PAL GILL No. 16642 Exp. 06-30-12 ELECTRICAL STATE OF CALIFORNIA

THE STATE OF CALIFORNIA OR ITS OFFICERS OR AGENTS SHALL NOT BE RESPONSIBLE FOR THE ACCURACY OR COMPLETENESS OF SCANNED COPIES OF THIS PLAN SHEET.

PROJECT NOTES (THIS SHEET ONLY):

1. RC pb. INSTALL NEW PB. INSTALL 2"C BETWEEN DETECTOR HANDHOLE AND PULL BOX.
2. INSTALL TYPE D DETECTOR LOOP WITH 5 TURNS PER ES-5B, NOTE 2.

ABBREVIATIONS:

WVDS WIRELESS VEHICLE DETECTION SYSTEM
VSN VEHICLE SENSOR NODE

LEGEND:

Exist WVDS VEHICLE SENSOR NODE
WVDS VEHICLE SENSOR NODE

GENERAL NOTES:

1. FOR ACCURATE RIGHT OF WAY DATA, CONTACT RIGHT OF WAY ENGINEERING AT THE DISTRICT OFFICE.
2. EXACT LOCATION AND ORIENTATION OF ELECTRICAL EQUIPMENT SHALL BE APPROVED BY THE ENGINEER IN THE FIELD.
3. CONTRACTOR SHALL FIELD VERIFY EXACT LOCATION AND PROTECT EXISTING UTILITIES DURING CONSTRUCTION.
4. INSTALL DETECTOR LOOPS CENTERED IN EACH LANE.

QUANTITY TABLE

ELEMENT	LOCATION	APPROXIMATE POST MILE	MAINLINE		SIGNAL LOOPS		NOTES
			TYPE A LOOPS	WVDS VSN	TYPE D	TYPE A	
WVDS	JCT 65 SEPARATION	5.30		12			SEE SHEET E-2
RAMP METER	ROCKLIN RD	5.93	17				
WVDS	ROCKLIN RD	6.60		12			SEE SHEET E-2
TRAFFIC SIGNAL	ROCKLIN RD	6.05			6	23	
WVDS	SIERRA COLLEGE BLVD	7.90		12			SEE SHEET E-2
WVDS	HORSESHOE BAR RD	8.80		12			SEE SHEET E-2
TRAFFIC SIGNAL	HORSESHOE BAR RD	8.72			2	8	
WVDS	KING RD	9.80		12			SEE SHEET E-2
TRAFFIC SIGNAL	PENRYN RD	10.53			1	7	
WVDS	ROCK SPRINGS RD	10.80		12			SEE SHEET E-2
WVDS	GILARDI RD	12.10		12			SEE SHEET E-2

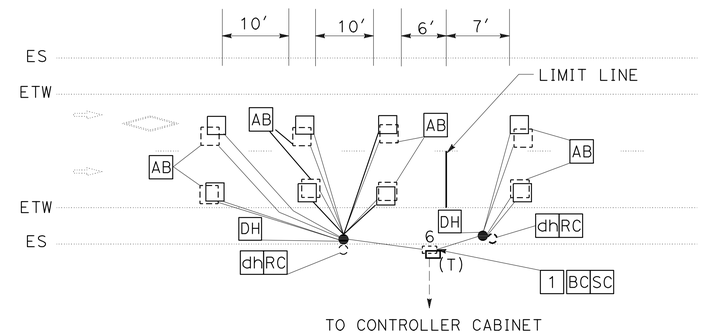

TYPICAL RAMP METER LIMIT LINE DETECTOR LOOP INSTALLATION DETAIL

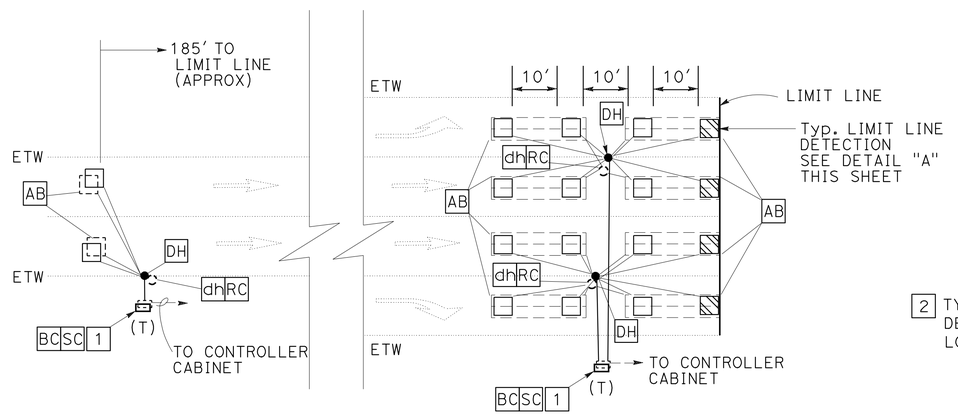

TYPICAL TRAFFIC SIGNAL DETECTOR LOOP INSTALLATION DETAIL

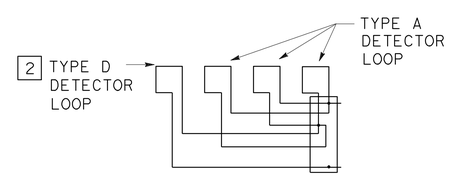

DETAIL "A"

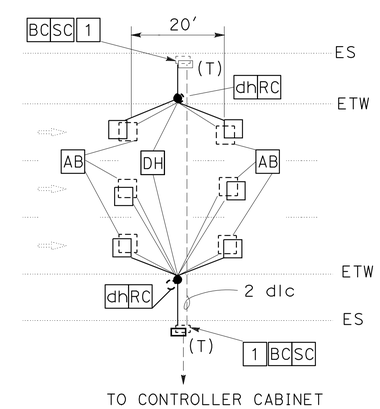

TYPICAL RAMP METER MAINLINE DETECTOR LOOP INSTALLATION DETAIL

N1-2
- 1 = ENTERING
- 2 = LEAVING
- LANE NUMBER
- E = EASTBOUND
- W = WESTBOUND
- N = NORTHBOUND
- S = SOUTHBOUND

MAINLINE DETECTOR LOOP IDENTIFICATION

D-1
- LOOP NUMBER
- D = DEMAND
- P = PASSAGE
- Q = QUEUE
- F = OFFRAMP

RAMP METER DETECTOR LOOP IDENTIFICATION

THIS PLAN IS ACCURATE FOR ELECTRICAL WORK ONLY.

MODIFY WIRELESS VEHICLE DETECTION SYSTEM
MODIFY RAMP METERING SYSTEM
MODIFY TRAFFIC SIGNAL

NO SCALE

E-1

STATE OF CALIFORNIA - DEPARTMENT OF TRANSPORTATION
Caltrans® ELECTRICAL DESIGN
FUNCTIONAL SUPERVISOR: STEVEN BLOCK
CALCULATED-DESIGNED BY: TOM McEWAN
CHECKED BY: RUPINDER PAL GILL
REVISED BY
DATE REVISED

LAST REVISION 00-00-00
DATE PLOTTED => 14-JUN-2011
TIME PLOTTED => 09:11

Dist	COUNTY	ROUTE	POST MILES TOTAL PROJECT	SHEET No.	TOTAL SHEETS
03	Pla	80	5.1/14.5	28	59

R. P. Gill
REGISTERED ELECTRICAL ENGINEER — 6-13-11 DATE

6-13-11
PLANS APPROVAL DATE

REGISTERED PROFESSIONAL ENGINEER — RUPINDER PAL GILL — No. 16642 — Exp. 06-30-12 — ELECTRICAL — STATE OF CALIFORNIA

THE STATE OF CALIFORNIA OR ITS OFFICERS OR AGENTS SHALL NOT BE RESPONSIBLE FOR THE ACCURACY OR COMPLETENESS OF SCANNED COPIES OF THIS PLAN SHEET.

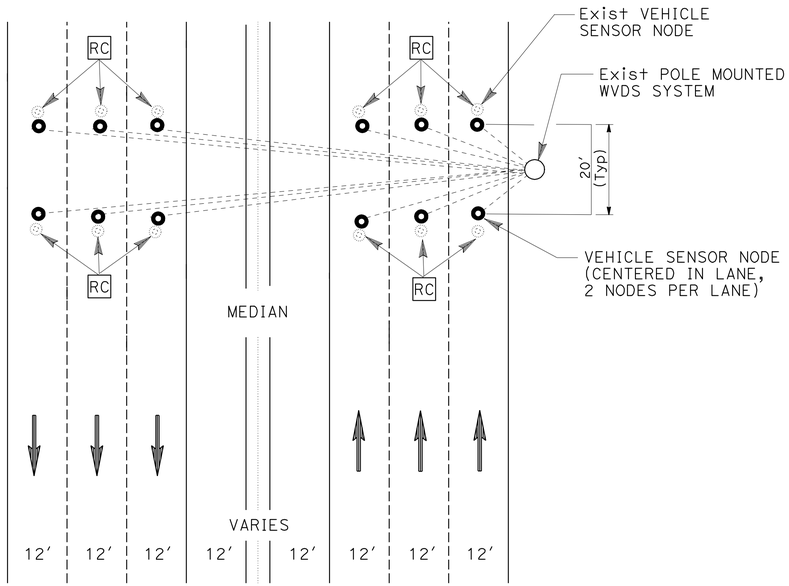

DETAIL 'A'

TYPICAL VEHICLE SENSOR NODE PLACEMENT DETAIL
(NUMBER OF LANES VARIES - SEE E-1)

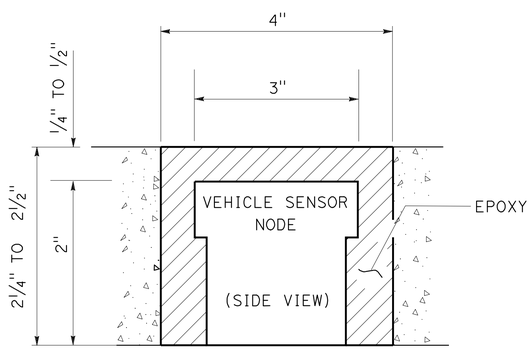

DETAIL 'B'

VEHICLE SENSOR NODE
INSTALLED IN ROADWAY

WIRELESS VEHICLE DETECTOR SENSOR NODE INSTALLATION PROCEDURE

1. PRIOR TO INSTALLATION, IDENTIFY SENSOR'S ID, LANE NUMBER, AND LOCATION IN LANE.
2. CORE A HOLE 2¼" TO 2½" DEEP SO THAT WHEN INSTALLED THE TOP OF THE SENSOR IS AT ¼" TO ½" BELOW THE SURFACE.
3. MAKE SURE THE SENSOR INSTALLS FLAT IN THE CORED HOLE AND IS NOT TILTED.
4. USE THE HEAT-GUN OR HOT COMPRESSED AIR TO DRY THE INSIDE OF THE CORED HOLE. THERE MUST BE ABSOLUTELY NO MOISTURE ON THE APPLIED SURFACE.
5. FILL THE HOLE ABOUT 2/3 FULL OF THE SENSOR EPOXY/ADHESIVE.
6. PLACE SENSOR IN THE HOLE WITH ARROW POINTING IN THE DIRECTION OF TRAFFIC. THE EPOXY SHOULD STILL HAVE WORK TIME, SO THE SENSOR CAN BE ROTATED TO THE RIGHT POSITION. PUSH SENSOR DOWN SO IT LAYS FLAT ON THE BOTTOM OF THE HOLE. THIS ASSURES THAT THERE IS A BOND UNDERNEATH THE SENSOR WITH THE EPOXY.
7. FILL THE HOLE WITH THE REMAINING EPOXY TO COVER THE SENSOR. LEVEL EPOXY WITH THE SURFACE OF THE ROAD.
8. AFTER THE FIRST APPLICATION, DO NOT LET THE EPOXY SIT FOR MORE THAN 30 SECONDS BEFORE THE NEXT APPLICATION.
9. THE INSTALLATION PAVEMENT TEMPERATURE SHOULD BE GREATER THAN 20°F.
10. DEPENDING ON AMBIENT TEMPERATURE AND HUMIDITY, ADHESIVE DRYING TIME WILL VARY FROM 5 MINUTES TO 15 MINUTES. VERIFY HARDNESS OF EPOXY BEFORE REOPENING THE LANE FOR TRAFFIC.
11. RECORD DISTANCES BETWEEN EACH SENSOR PAIR.

MODIFY WIRELESS VEHICLE DETECTION SYSTEM
(DETAILS)

NO SCALE

THIS PLAN IS ACCURATE FOR ELECTRICAL WORK ONLY

E-2

STATE OF CALIFORNIA - DEPARTMENT OF TRANSPORTATION
Caltrans® ELECTRICAL DESIGN

FUNCTIONAL SUPERVISOR: STEVEN BLOCK
CALCULATED-DESIGNED BY: TOM McEWAN
CHECKED BY: RUPINDER PAL GILL
REVISED BY
DATE REVISED

LAST REVISION 12-17-10
DATE PLOTTED => 14-JUN-2011
TIME PLOTTED => 06:41

Dist	COUNTY	ROUTE	POST MILES TOTAL PROJECT	SHEET No.	TOTAL SHEETS
03	Pla	80	5.1/14.5	29	59

R. P. Gill
REGISTERED ELECTRICAL ENGINEER — 6-13-11 DATE

6-13-11
PLANS APPROVAL DATE

REGISTERED PROFESSIONAL ENGINEER — RUPINDER PAL GILL No. 16642 Exp. 06-30-12 ELECTRICAL — STATE OF CALIFORNIA

THE STATE OF CALIFORNIA OR ITS OFFICERS OR AGENTS SHALL NOT BE RESPONSIBLE FOR THE ACCURACY OR COMPLETENESS OF SCANNED COPIES OF THIS PLAN SHEET.

PROJECT NOTES (THIS SHEET ONLY):

1 Exist 2"C, RC 12 dlc.
INSTALL 6 DLC AND 12 STC.
COIL 30' OF DLC AND STC AT BOTTOM OF Exist CONTROLLER CABINET. FINAL CONNECTIONS BY OTHERS.

2 AB Exist LOOP CONDUCTORS. RC dh.
RC CONDUIT TO pb.

GENERAL NOTES:

1. FOR ACCURATE RIGHT OF WAY DATA, CONTACT RIGHT OF WAY ENGINEERING AT THE DISTRICT OFFICE.
2. THE ENGINEER SHALL VERIFY THE FINAL LOCATION OF THE PIEZOELECTRIC AXLE SENSOR PRIOR TO CONTRACTOR PERFORMING ANY WORK IN THE TRAVELED WAY OR SHOULDERS.
3. EXACT CONFIGURATION AND INSTALLATION PROCEDURES OF PIEZOELECTRIC AXLE SENSOR AND LOOP DETECTORS SHALL CONFORM TO THE REQUIREMENTS OF THE PIEZOELECTRIC AXLE SENSOR MANUFACTURER.

ABBREVIATIONS:

AVC - AUTOMATIC VEHICLE CLASSIFICATION
STC - SCREENED TRANSMISSION CABLE

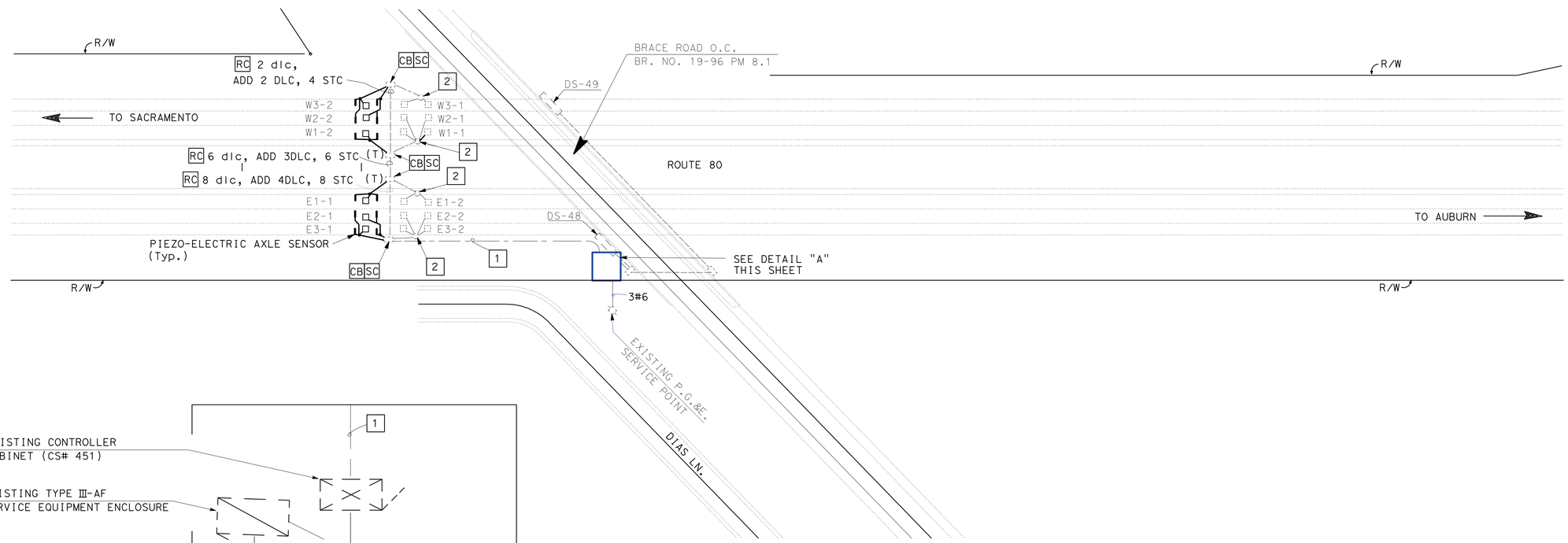

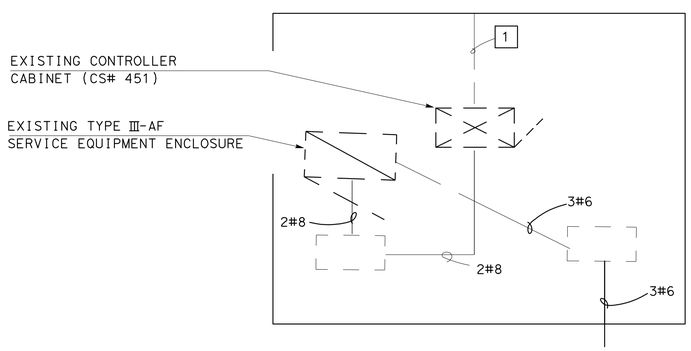

DETAIL A
NO SCALE

THIS PLAN IS ACCURATE FOR ELECTRICAL WORK ONLY.

MODIFY TRAFFIC MONITORING STATION
MODIFY AUTOMATIC VEHICLE CLASSIFICATION SYSTEM

NO SCALE

E-3

STATE OF CALIFORNIA - DEPARTMENT OF TRANSPORTATION
Caltrans®
ELECTRICAL DESIGN

FUNCTIONAL SUPERVISOR: STEVEN BLOCK
CALCULATED-DESIGNED BY: TOM McEWAN
CHECKED BY: RUPINDER PAL GILL
REVISED BY
DATE REVISED

LAST REVISION 12-17-10
DATE PLOTTED => 14-JUN-2011
TIME PLOTTED => 11:23

Dist	COUNTY	ROUTE	POST MILES TOTAL PROJECT	SHEET No.	TOTAL SHEETS
03	Pla	80	5.1/14.5	30	59

R. P. Gill 6-13-11
REGISTERED ELECTRICAL ENGINEER DATE

6-13-11
PLANS APPROVAL DATE

REGISTERED PROFESSIONAL ENGINEER RUPINDER PAL GILL No. 16642 Exp. 06-30-12 ELECTRICAL STATE OF CALIFORNIA

THE STATE OF CALIFORNIA OR ITS OFFICERS OR AGENTS SHALL NOT BE RESPONSIBLE FOR THE ACCURACY OR COMPLETENESS OF SCANNED COPIES OF THIS PLAN SHEET.

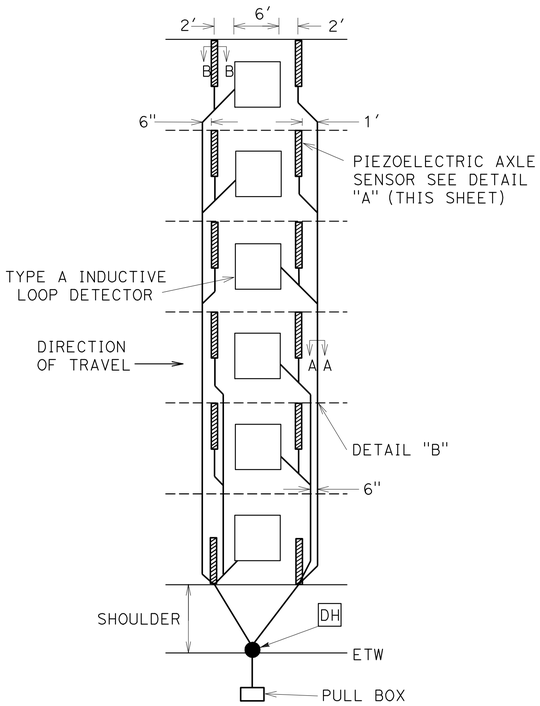

TYPICAL PIEZOELECTRIC AXLE SENSOR INSTALLATION

(SEE PLAN SHEET FOR NUMBER OF LANES)

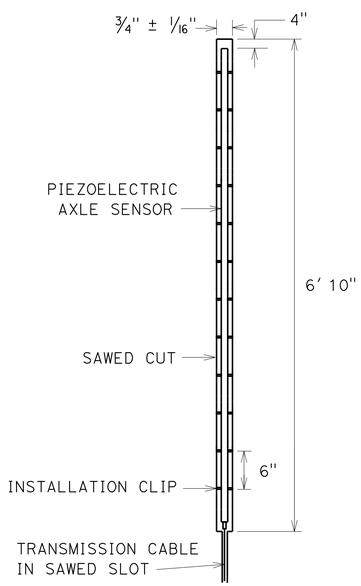

DETAIL "A"

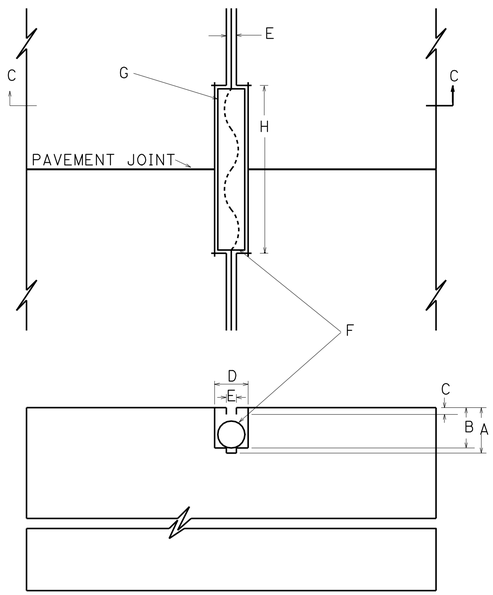

SECTION C-C

DETAIL "B"

(TYPICAL LEAD-IN AT PAVEMENT JOINT)

A. SAW CUT DEPTH TO ACCOMMODATE SPECIFIED NUMBER OF CONDUCTORS WITH A MINIMUM OF 1" FROM TOP OF WIRE TO PAVEMENT SURFACE (3-1/4" Max).
B. SLOT SAW-CUT DEPTH TO ACCOMMODATE 1" TYPE 3 CONDUIT WITH ½" MINIMUM FROM TOP OF CONDUIT TO PAVEMENT SURFACE.
C. ½" MINIMUM BETWEEN TOP OF CONDUIT AND PAVEMENT SURFACE.
D. SAW-CUT WIDTH TO ACCOMMODATE 1" TYPE 3 CONDUIT WITH ⅛" CLEARANCE.
E. SAW-CUT ½" WIDE.
F. 1" TYPE 3 CONDUIT, 6" LONG. PLUG BOTH ENDS WITH CAULKING COMPOUND TO KEEP OUT EPOXY.
G. CONDUCTORS WITH ½" MINIMUM SLACK INSIDE CONDUIT.
H. SAW-CUT LENGTH OF SLOT ⅛" LONGER THAN CONDUIT.

I. NO SPLICING FOR PIEZO CABLE.

J. CONTRACTOR SHALL INSTALL PIEZOELECTRIC ACCORDING TO MANUFACTURER INSTRUCTIONS UNLESS OTHERWISE NOTED ON THIS PLAN SHEET.

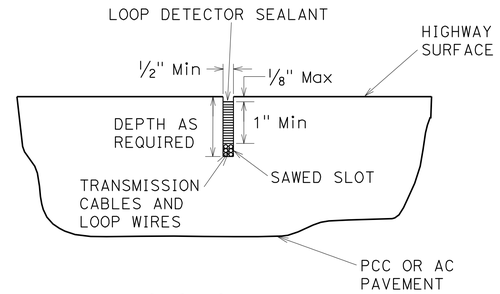

SECTION A-A

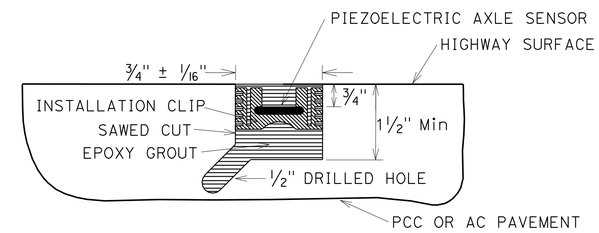

SECTION B-B

PIEZOELECTRIC AXLE SENSOR INSTALLATION PROCEDURE:

1. MARK THE POSITION OF THE AXLE SENSORS AS DIRECTED BY THE ENGINEER. AXLE SENSOR CHANNELS MUST BE PERPENDICULAR TO TRAFFIC.
2. MARK THE POSITION OF THE LOOP DETECTORS. THE DETECTORS SHALL BE CENTERED IN THE LANE AND BETWEEN THE AXLE SENSORS.
3. MARK THE HOME RUN CUTS AS SHOWN IN THE AXLE SENSOR INSTALLATION DETAIL.
4. USING A CONCRETE SAW, CUT THE AXLE SENSOR CHANNELS ¾" WIDE BY 1" DEEP IN A SINGLE PASS. CUTS SHALL BE STRAIGHT AND TRUE.
5. CUT THE LOOP DETECTORS AND HOME RUNS IN ACCORDANCE WITH CALTRANS SPECIFICATIONS.
6. DRILL ½" Dia HOLES, 1" DEEP AT A 45 DEGREE ANGLE AT THE BOTTOM CORNERS OF EACH AXLE SENSOR CHANNEL. HOLES SHALL BE 1′ APART AND ON ALTERNATING SIDES OF THE CHANNEL.
7. WASH OUT THE CHANNELS AND ALL SAW CUTS THOROUGHLY WITH HIGH PRESSURE WATER. DRY COMPLETELY WITH AN AIR COMPRESSOR. IN PCC PAVEMENT ONLY, WIPE OUT THE CHANNELS WITH LACQUER THINNER AND CLEAN COTTON RAGS.
8. PLACE 4" DUCT TAPE STRIPS ON THE PAVEMENT AROUND THE CHANNELS.
9. ENSURE THAT EACH SENSOR IS STRAIGHT AND FLAT. BEND EACH END DOWN SLIGHTLY AND PLACE THE INSTALLATION CLIPS ON THE SENSOR.
10. BLOCK OFF THE CABLE END OF THE CHANNEL WITH DUCT SEAL TO PREVENT THE GROUT FLOWING OUT OF THE CHANNEL.
11. INSERT SENSOR EPOXY CARTRIDGE INTO CAULKING GUN. ATTACH STATIC MIXING TUBE ONTO CARTRIDGE.
12. WHILE WEARING PROTECTIVE GLOVES, HALF FILL THE CHANNEL WITH SENSOR EPOXY. ENSURE THAT THE BOTTOM OF THE CHANNEL IS COMPLETELY COVERED, AND THAT THE HOLES DRILLED IN STEP 6 ARE FILLED.
13. PLACE THE SENSOR IN THE CHANNEL WITH THE BRASS ELEMENT ½" BELOW THE ROAD SURFACE WITH NO VOIDS BENEATH THE SENSOR.
14. COMPLETELY FILL THE CHANNEL WITH SENSOR EPOXY. SMOOTH OUT THE EPOXY ON TOP OF THE SENSOR TO ROAD LEVEL WITH NO TROUGH ON TOP.
15. WHEN SENSOR EPOXY HAS BEGUN TO SET, REMOVE THE DUCT TAPE FROM THE PAVEMENT. REMOVE THE DUCT SEAL FROM THE END OF THE CHANNEL.
16. INSTALL THE LOOP DETECTORS AS PER CALTRANS SPECIFICATIONS.
17. INSTALL ALL LEAD-IN CABLES IN THE HOME RUN SLOTS, INSTALLING TYPE 3 CONDUIT AT THE EXPANSION JOINT CROSSINGS. PULL CABLES THROUGH STUB-OUT CONDUIT AND COIL IN PULL BOX.
18. SEAL ALL SAW CUTS. ELASTOMERIC SEALANT ONLY SHALL BE USED IN ALL CUTS CONTAINING SCREENED TRANSMISSION CABLES.
19. REMOVE ANY HIGH SPOTS IN THE SENSOR EPOXY WITH A HAND GRINDER.
20. CLEAN UP THE SITE. WHEN ALL SEALANTS ARE COMPLETELY CURED, LANES MAY BE OPENED TO TRAFFIC.

MODIFY AUTOMATIC VEHICLE CLASSIFICATION SYSTEM

NO SCALE

THIS PLAN IS ACCURATE FOR ELECTRICAL WORK ONLY.

E-4

STATE OF CALIFORNIA - DEPARTMENT OF TRANSPORTATION
Caltrans® ELECTRICAL DESIGN

FUNCTIONAL SUPERVISOR: STEVEN BLOCK
CALCULATED-DESIGNED BY: RUPINDER PAL GILL
CHECKED BY: TOM McEWAN
REVISED BY
DATE REVISED

LAST REVISION 12-17-10
DATE PLOTTED => 14-JUN-2011
TIME PLOTTED => 06:42

Dist	COUNTY	ROUTE	POST MILES TOTAL PROJECT	SHEET No.	TOTAL SHEETS
03	Pla	80	5.1/14.5	31	59

Randell D. Hiatt
REGISTERED CIVIL ENGINEER

May 20, 2011
PLANS APPROVAL DATE

REGISTERED PROFESSIONAL ENGINEER
Randell D. Hiatt
No. C50200
Exp. 6-30-11
CIVIL
STATE OF CALIFORNIA

The State of California or its officers or agents shall not be responsible for the accuracy or completeness of electronic copies of this plan sheet.

To accompany plans dated 6-13-11

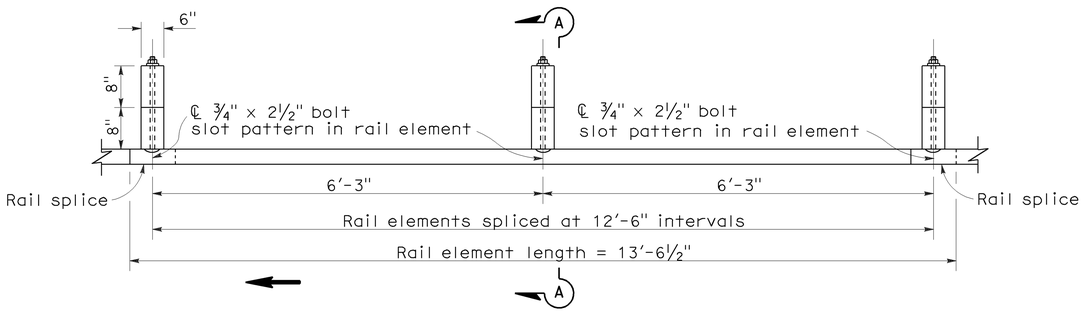

PLAN

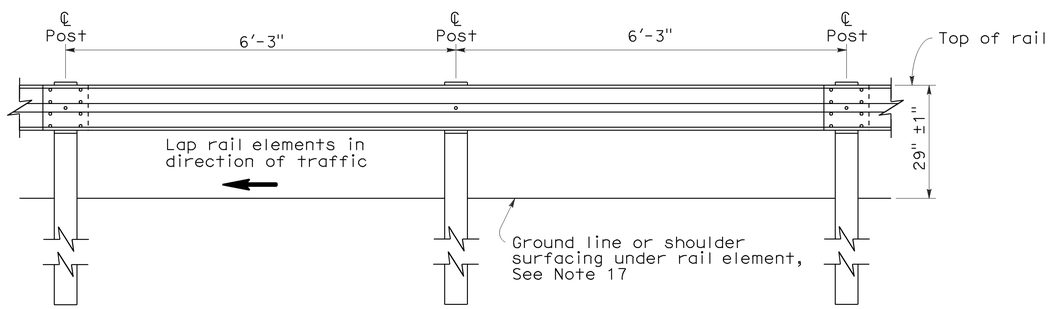

ELEVATION

METAL BEAM GUARD RAILING WITH WOOD POST AND BLOCKS

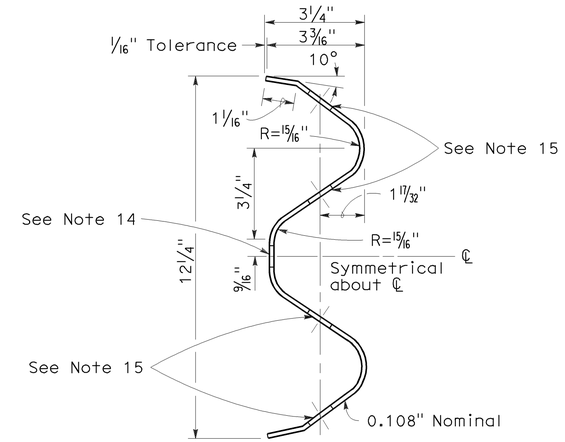

SECTION THRU RAIL ELEMENT

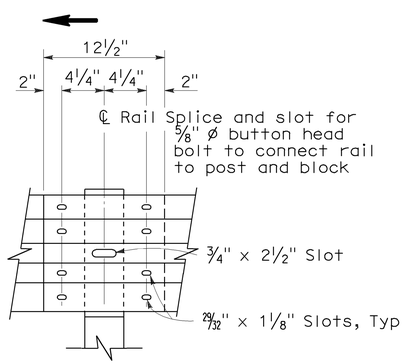

ELEVATION

RAIL ELEMENT SPLICE DETAIL

a) Connect the over lapped end of the rail elements with ⅝" ø x 1⅜" button head oval shoulder splice bolts inserted into the 29⁄32" x 1⅛" slots and bolted together with ⅝" ø recessed hex nuts. Recess of hex nut points toward rail element. A total of 8 bolts and nuts are to be used at each rail splice connection.

b) The ends of the rail elements are to be overlapped in the direction of traffic (see details).

c) Where end cap is to be attached to the end of a rail element, a total of 4 of the above described splice bolts and nuts are to be used.

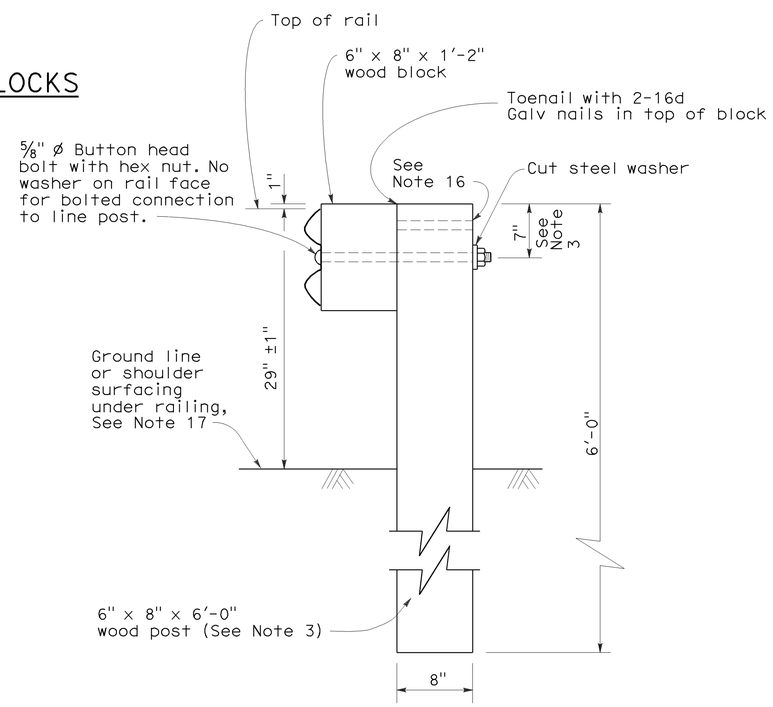

SECTION A-A

TYPICAL WOOD LINE POST INSTALLATION

See Note 4

NOTES:

1. For details of steel post installations, see Standard Plan A77A2.
2. For details of standard hardware used to construct guard railing, see Standard Plan A77B1.
3. For details of wood posts and wood blocks used to construct guard railing, see Standard Plan A77C1.
4. For additional installation details, see Standard Plan A77C3.
5. Guard railing post spacing to be 6'-3" center to center, except as otherwise noted.
6. For guard railing typical layouts, see the A77E, A77F and A77G Series of Standard Plans.
7. For terminal system end treatment details, see the A77L Series of Standard Plans. To connect railing to terminal system end treatment, transition the top of railing height at a ratio of 120:1 to terminal system end treatment height plus one 12'-6" standard railing section at the transitioned height for a horizontal connection to the end treatment.
8. For guard railing end anchor details, see Standard Plans A77H1 and A77I2.
9. For details of guard railing transition to bridge railing, see Standard Plan A77J4.
10. For additional details of guard railing connection to bridge railings, see Standard Plans A77J1, A77J2 and A77K1.
11. For guard railing connection details to abutments and walls, see Standard Plan A77J3.
12. Direction of adjacent traffic indicated by ➡.
13. For typical guard railing delineation and dike positioning details, see Standard Plan A77C4.
14. Slotted hole for bolted connection of rail element to block and post. See "Section Thru Rail Element".
15. Slotted holes for splice bolts to overlap ends of rail element. See "Section Thru Rail Element".
16. Additional hole in uppermost portion of line post is for potential future adjustments of railing height. See Standard Plan A77C1.
17. Install posts in soil.

STATE OF CALIFORNIA
DEPARTMENT OF TRANSPORTATION

METAL BEAM GUARD RAILING STANDARD RAILING SECTION (WOOD POST WITH WOOD BLOCK)

NO SCALE

RSP A77A1 DATED MAY 20, 2011 SUPERSEDES STANDARD PLAN A77A1 DATED MAY 1, 2006 - PAGE 41 OF THE STANDARD PLANS BOOK DATED MAY 2006.

REVISED STANDARD PLAN RSP A77A1

2006 REVISED STANDARD PLAN RSP A77A1

3-10-11

To accompany plans dated 6-13-11

Dist	COUNTY	ROUTE	POST MILES TOTAL PROJECT	SHEET No.	TOTAL SHEETS
03	Pla	80	5.1/14.5	32	59

Randell D. Hiatt
REGISTERED CIVIL ENGINEER

May 20, 2011
PLANS APPROVAL DATE

REGISTERED PROFESSIONAL ENGINEER
Randell D. Hiatt
No. C50200
Exp. 6-30-11
CIVIL
STATE OF CALIFORNIA

The State of California or its officers or agents shall not be responsible for the accuracy or completeness of electronic copies of this plan sheet.

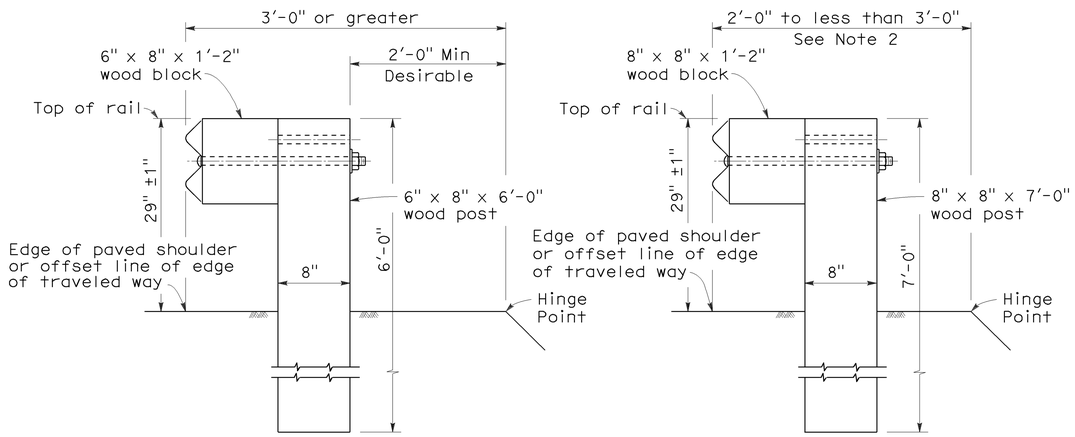

DETAIL A
TYPICAL ROADWAY INSTALLATION
See Note 1

DETAIL B
NARROW ROADWAY INSTALLATION
See Note 1

POST EMBEDMENT

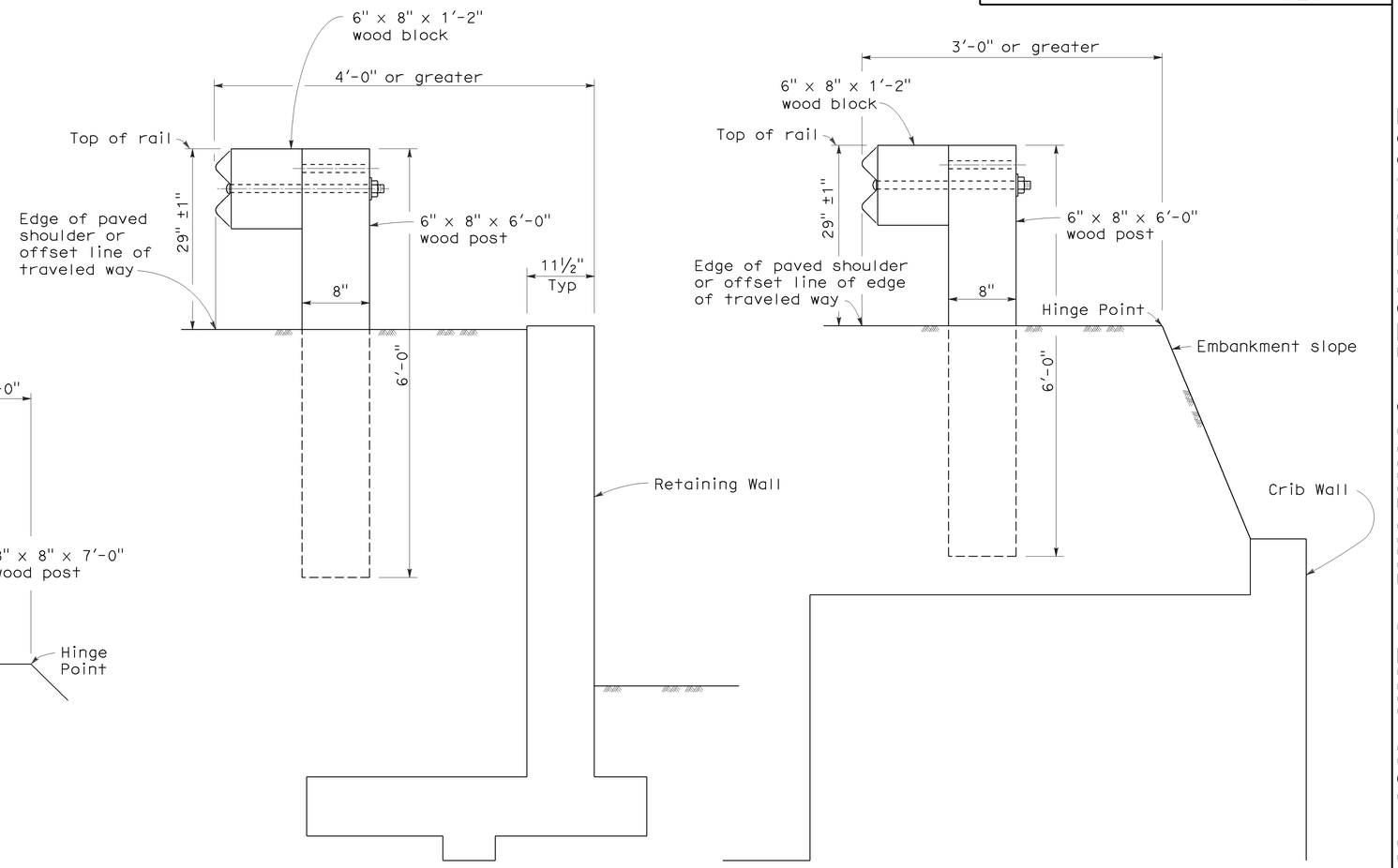

DETAIL C

DETAIL D

INSTALLATION AT EARTH RETAINING WALLS

NOTES:

1. These installation details also applicable to steel line post installations. For Detail A, C, and D, where steel line post installations are constructed, W6 x 9 steel post, 6'-0" in length, with 6" x 8" x 1'-2" notched wood blocks or notched recycled plastic blocks are to be used in place of the size of wood post and wood block shown. For Detail B, where steel line post installations are constructed, W6 x 9 steel post, 7'-0" in length, with 6" x 8" x 1'-2" notched wood blocks or notched recycled plastic blocks are to be used in place of the size of wood post and wood block shown. For additional installation details, see Standard Plans A77A1 and A77A2.
2. Where the distance between the face of the rail and the hinge point is less than 2'-0", see the Project Plans for special details.
3. For dike positioning with guard railing installations, see Standard Plan A77C4.

STATE OF CALIFORNIA
DEPARTMENT OF TRANSPORTATION

METAL BEAM GUARD RAILING TYPICAL LINE POST EMBEDMENT AND HINGE POINT OFFSET DETAILS

NO SCALE

RSP A77C3 DATED MAY 20, 2011 SUPERSEDES STANDARD PLAN A77C3
DATED MAY 1, 2006 - PAGE 46 OF THE STANDARD PLANS BOOK DATED MAY 2006.

REVISED STANDARD PLAN RSP A77C3

2006 REVISED STANDARD PLAN RSP A77C3

3-10-11

Dist	COUNTY	ROUTE	POST MILES TOTAL PROJECT	SHEET No.	TOTAL SHEETS
03	Pla	80	5.1/14.5	33	59

Randell D. Hiatt
REGISTERED CIVIL ENGINEER

May 20, 2011
PLANS APPROVAL DATE

REGISTERED PROFESSIONAL ENGINEER
Randell D. Hiatt
No. C50200
Exp. 6-30-11
CIVIL
STATE OF CALIFORNIA

The State of California or its officers or agents shall not be responsible for the accuracy or completeness of electronic copies of this plan sheet.

To accompany plans dated 6-13-11

NOTES:

1. When necessary to place dike in front of face of guard railing, only Type C dike may be used. For dike details, see Standard Plan A87B.
2. For standard railing post embedment, see Standard Plans A77C3.
3. Guard railing delineation to be used where shown on the Project Plans.
4. When dike or curb is placed under guard railing, the maximum height of the dike or curb shall be 4". Mountable dike should not be used. For dike and curb details, see Standard Plans A87A and A87B.
5. For details of typical distance between the face of rail and hinge point, see Standard Plan A77C3.
6. For steel line posts, use ¼ - 20 self-tapping screws in 0.22" diameter holes or ¼" bolts in 9/32" diameter holes.

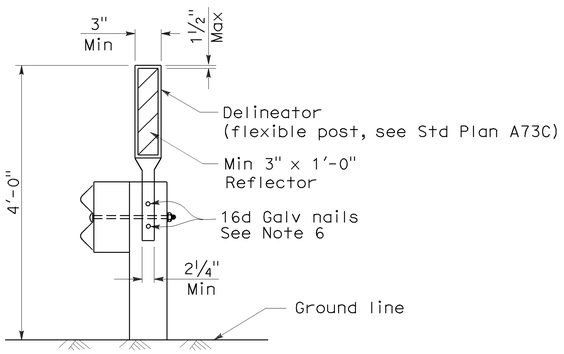

GUARD RAILING DELINEATION

See Note 3

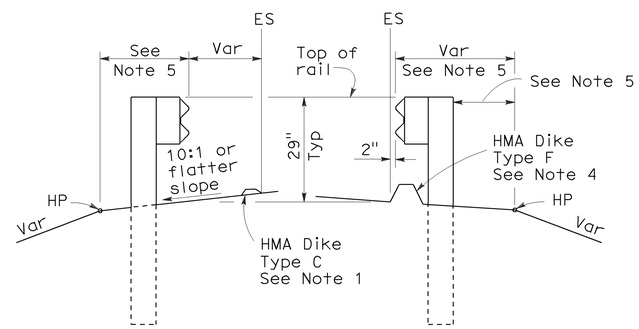

DIKE POSITIONING

See Note 1

STATE OF CALIFORNIA
DEPARTMENT OF TRANSPORTATION

METAL BEAM GUARD RAILING TYPICAL RAILING DELINEATION AND DIKE POSITIONING DETAILS

NO SCALE

RSP A77C4 DATED MAY 20, 2011 SUPERSEDES RSP A77C4 DATED JUNE 6, 2008 AND STANDARD PLAN A77C4 DATED MAY 1, 2006 - PAGE 47 OF THE STANDARD PLANS BOOK DATED MAY 2006.

REVISED STANDARD PLAN RSP A77C4

2006 REVISED STANDARD PLAN RSP A77C4

3-10-11

DIST	COUNTY	ROUTE	POST MILES TOTAL PROJECT	SHEET NO.	TOTAL SHEETS
03	Pla	80	5.1/14.5	34	59

Randell D. Hiatt
REGISTERED CIVIL ENGINEER

October 20, 2006
PLANS APPROVAL DATE

REGISTERED PROFESSIONAL ENGINEER
Randell D. Hiatt
No. C50200
Exp. 6-30-07
CIVIL
STATE OF CALIFORNIA

The State of California or its officers or agents shall not be responsible for the accuracy or completeness of electronic copies of this plan sheet.

To accompany plans dated 6-13-11

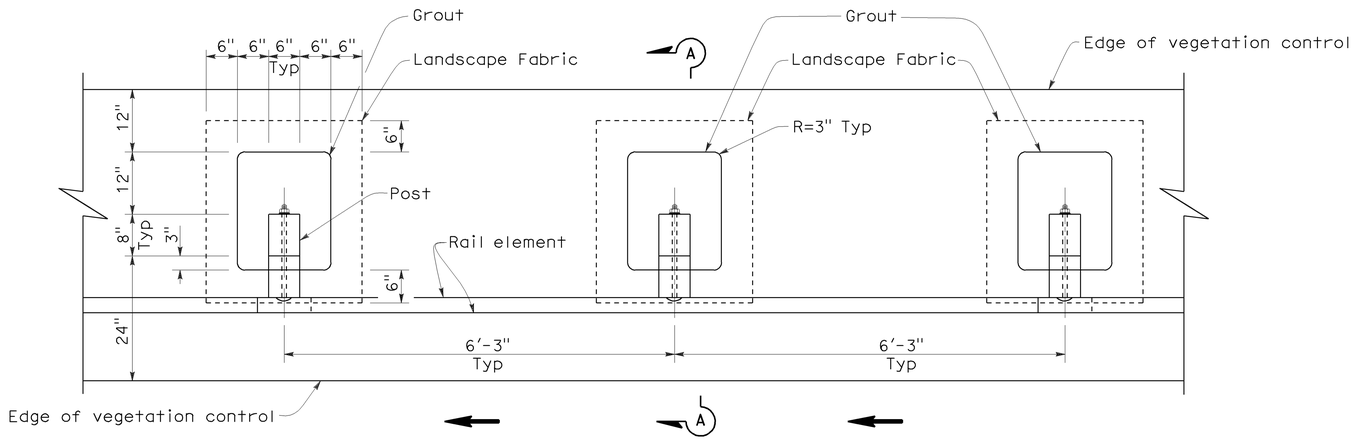

PLAN

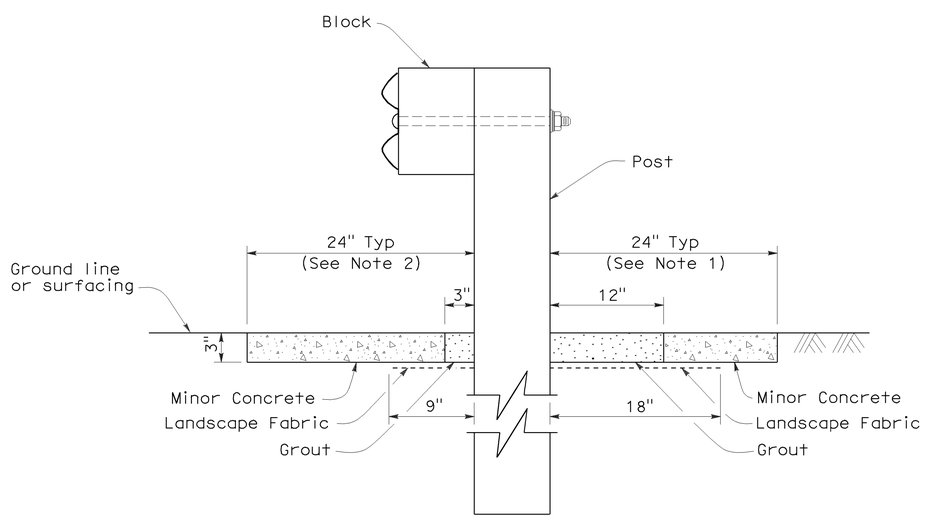

SECTION A-A

NOTES:

1. Where the distance between back of post and hinge point is less than 24", vegetation control to be constructed flush with the back edge of the post.
2. Where dike is constructed under railing, construct vegetation control to back edge of dike. Where paved shoulder is constructed within 24" in front of the post, construct vegetation control to the edge of paved shoulder.
3. Direction of adjacent traffic indicated by ← .

STATE OF CALIFORNIA
DEPARTMENT OF TRANSPORTATION

METAL BEAM GUARD RAILING TYPICAL VEGETATION CONTROL STANDARD RAILING SECTION

NO SCALE

NSP A77C5 DATED OCTOBER 20, 2006 SUPPLEMENTS THE STANDARD PLANS BOOK DATED MAY 2006.

NEW STANDARD PLAN NSP A77C5

2006 NEW STANDARD PLAN NSP A77C5

7-17-06

DIST	COUNTY	ROUTE	POST MILES TOTAL PROJECT	SHEET NO.	TOTAL SHEETS
03	Pla	80	5.1/14.5	35	59

Randell D. Hiatt
REGISTERED CIVIL ENGINEER

October 20, 2006
PLANS APPROVAL DATE

REGISTERED PROFESSIONAL ENGINEER
Randell D. Hiatt
No. C50200
Exp. 6-30-07
CIVIL
STATE OF CALIFORNIA

The State of California or its officers or agents shall not be responsible for the accuracy or completeness of electronic copies of this plan sheet.

To accompany plans dated 6-13-11

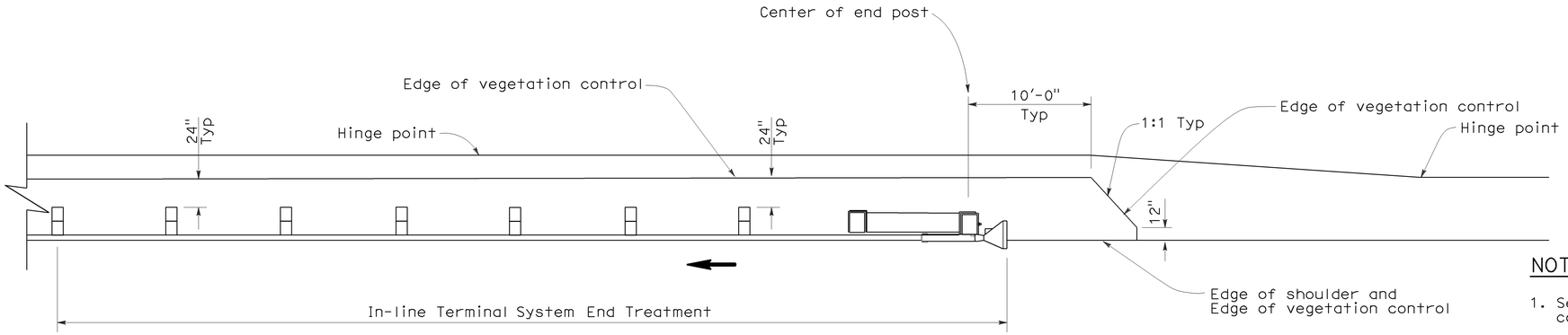

PLAN

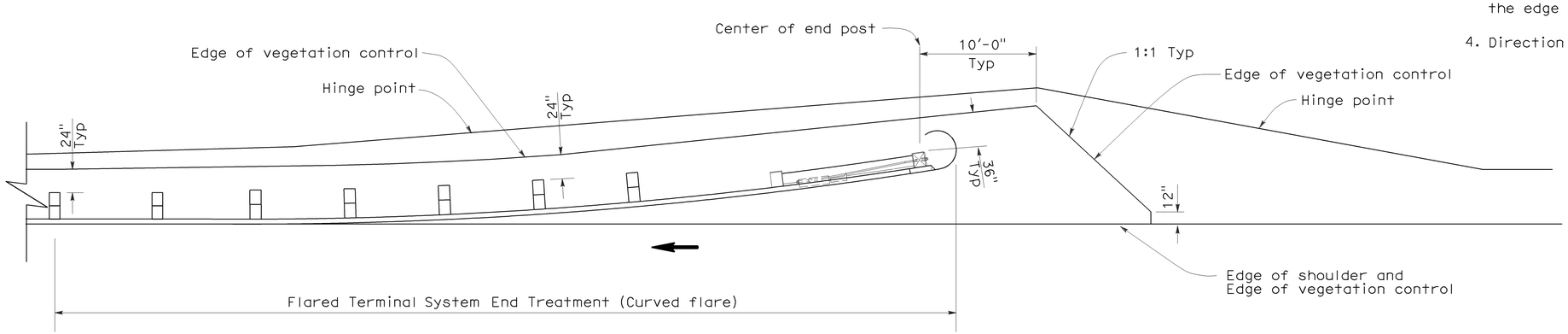

PLAN

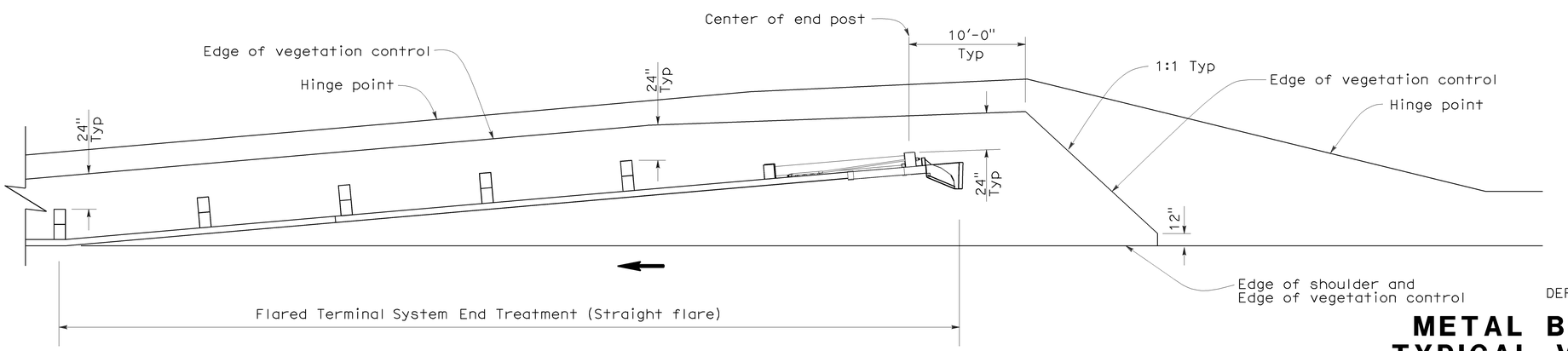

PLAN

NOTES:

1. See New Standard Plan NSP A77C5 for additional vegetation control details.
2. Where the distance between back of post and hinge point is less than 24", vegetation control to be constructed flush with the back edge of the post.
3. Where dike is constructed under railing, construct vegetation control to back edge of dike. Where paved shoulder is constructed within 24" in front of the post, construct vegetation control to the edge of paved shoulder.
4. Direction of adjacent traffic indicated by ←.

STATE OF CALIFORNIA
DEPARTMENT OF TRANSPORTATION

METAL BEAM GUARD RAILING TYPICAL VEGETATION CONTROL FOR TERMINAL SYSTEM END TREATMENTS

NO SCALE

NSP A77C6 DATED OCTOBER 20, 2006 SUPPLEMENTS THE STANDARD PLANS BOOK DATED MAY 2006.

NEW STANDARD PLAN NSP A77C6

2006 NEW STANDARD PLAN NSP A77C6

7-17-06

DIST	COUNTY	ROUTE	POST MILES TOTAL PROJECT	SHEET NO.	TOTAL SHEETS
03	Pla	80	5.1/14.5	36	59

Randell D. Hiatt
REGISTERED CIVIL ENGINEER

October 20, 2006
PLANS APPROVAL DATE

REGISTERED PROFESSIONAL ENGINEER
Randell D. Hiatt
No. C50200
Exp. 6-30-07
CIVIL
STATE OF CALIFORNIA

The State of California or its officers or agents shall not be responsible for the accuracy or completeness of electronic copies of this plan sheet.

To accompany plans dated 6-13-11

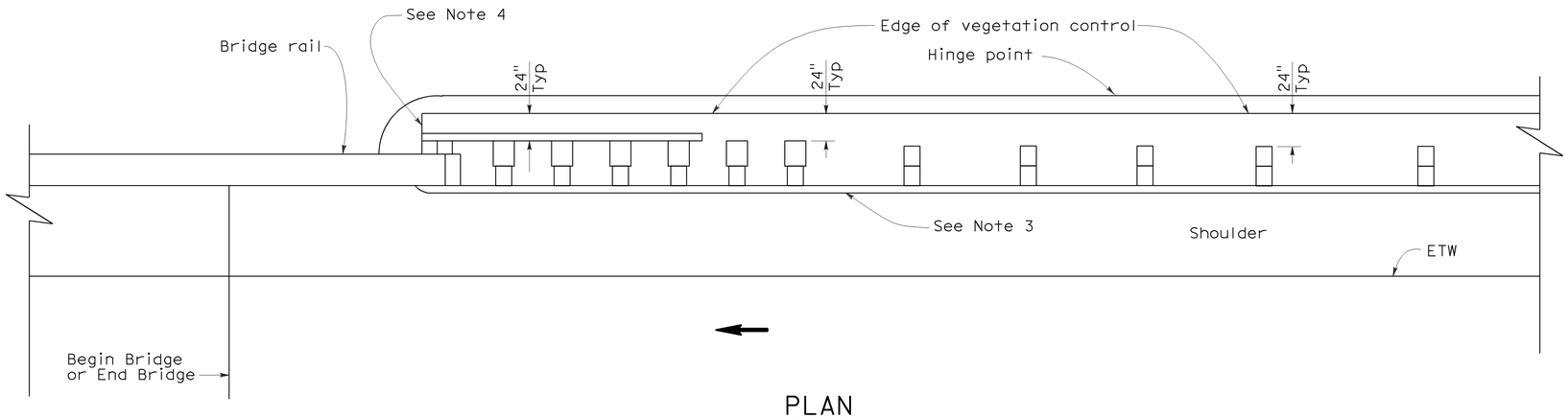

PLAN

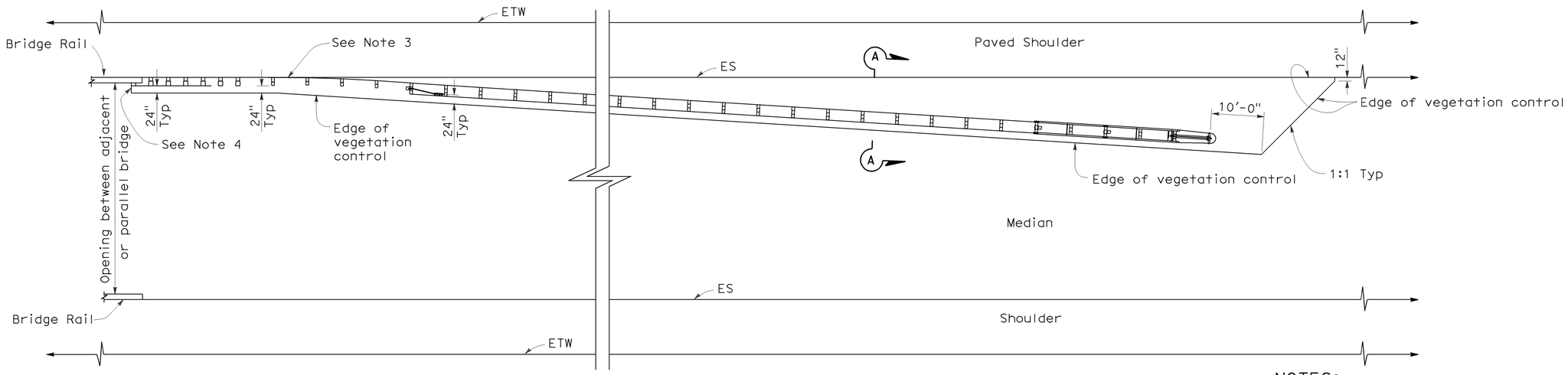

PLAN

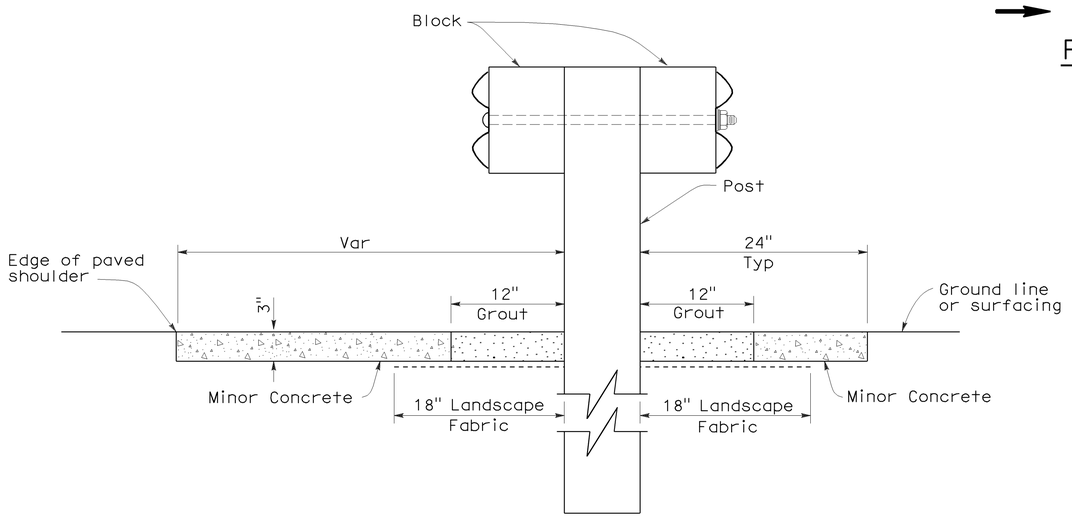

SECTION A-A

NOTES:

1. See New Standard Plan NSP A77C5 for additional vegetation control details.
2. Where the distance between back of post and hinge point is less than 24", vegetation control to be constructed flush with the back edge of the post.
3. Where dike is constructed under railing, construct vegetation control to back edge of dike. Where paved shoulder is constructed within 24" in front of the post, construct vegetation control to the edge of paved shoulder.
4. End vegetation control at end of backside rail element.
5. Direction of adjacent traffic indicated by ←.

STATE OF CALIFORNIA
DEPARTMENT OF TRANSPORTATION

METAL BEAM GUARD RAILING TYPICAL VEGETATION CONTROL AT STRUCTURE APPROACH AND DEPARTURE

NO SCALE

NSP A77C7 DATED OCTOBER 20, 2006 SUPPLEMENTS THE STANDARD PLANS BOOK DATED MAY 2006.

NEW STANDARD PLAN NSP A77C7

2006 NEW STANDARD PLAN NSP A77C7

7-17-06

DIST	COUNTY	ROUTE	POST MILES TOTAL PROJECT	SHEET NO.	TOTAL SHEETS
03	Pla	80	5.1/14.5	37	59

Randell D. Hiatt
REGISTERED CIVIL ENGINEER

October 20, 2006
PLANS APPROVAL DATE

REGISTERED PROFESSIONAL ENGINEER
Randell D. Hiatt
No. C50200
Exp. 6-30-07
CIVIL
STATE OF CALIFORNIA

The State of California or its officers or agents shall not be responsible for the accuracy or completeness of electronic copies of this plan sheet.

To accompany plans dated 6-13-11

NOTES:

1. See New Standard Plan NSP A77C5 for additional vegetation control details.
2. Where the distance between back of post and hinge point is less than 24", vegetation control to be constructed flush with the back edge of the post.
3. Where dike is constructed under railing, construct vegetation control to back edge of dike. Where paved shoulder is constructed within 24" in front of the post, construct vegetation control to the edge of paved shoulder.
4. Direction of adjacent traffic indicated by ←.

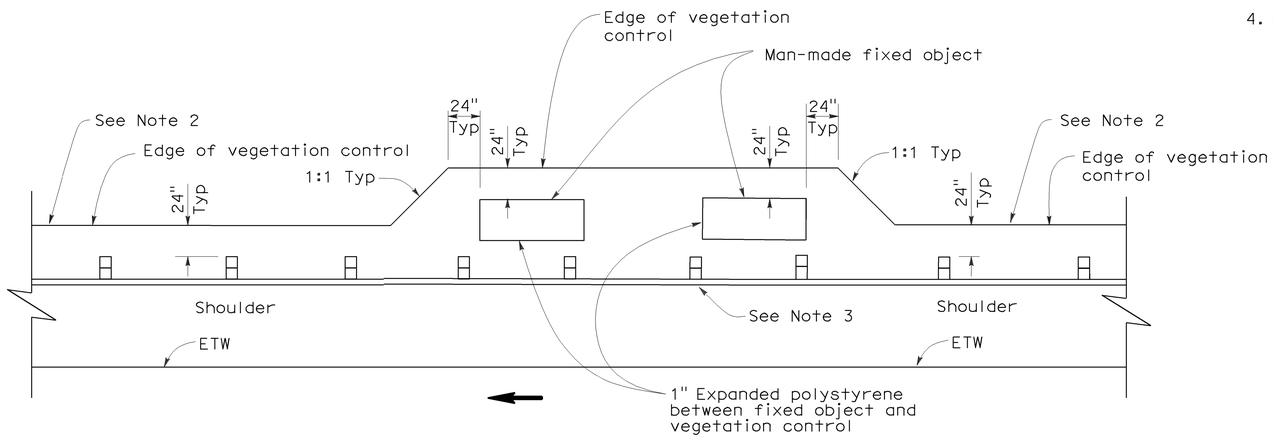

PLAN

FIXED OBJECT(S) ON SHOULDER

STATE OF CALIFORNIA
DEPARTMENT OF TRANSPORTATION

METAL BEAM GUARD RAILING TYPICAL VEGETATION CONTROL AT FIXED OBJECT

NO SCALE

NSP A77C8 DATED OCTOBER 20, 2006 SUPPLEMENTS THE STANDARD PLANS BOOK DATED MAY 2006.

NEW STANDARD PLAN NSP A77C8

2006 NEW STANDARD PLAN NSP A77C8

7-17-06

DIST	COUNTY	ROUTE	POST MILES TOTAL PROJECT	SHEET NO.	TOTAL SHEETS
03	Pla	80	5.1/14.5	38	59

Randell D. Hiatt
REGISTERED CIVIL ENGINEER

October 20, 2006
PLANS APPROVAL DATE

REGISTERED PROFESSIONAL ENGINEER
Randell D. Hiatt
No. C50200
Exp. 6-30-07
CIVIL
STATE OF CALIFORNIA

The State of California or its officers or agents shall not be responsible for the accuracy or completeness of electronic copies of this plan sheet.

To accompany plans dated 6-13-11

NOTES:

1. See New Standard Plan NSP A77C5 for additional vegetation control details.
2. Where dike is constructed under railing, construct vegetation control to back edge of dike. Where paved shoulder is constructed within 24" in front of the post, construct vegetation control to the edge of paved shoulder.
3. Direction of adjacent traffic indicated by ← .

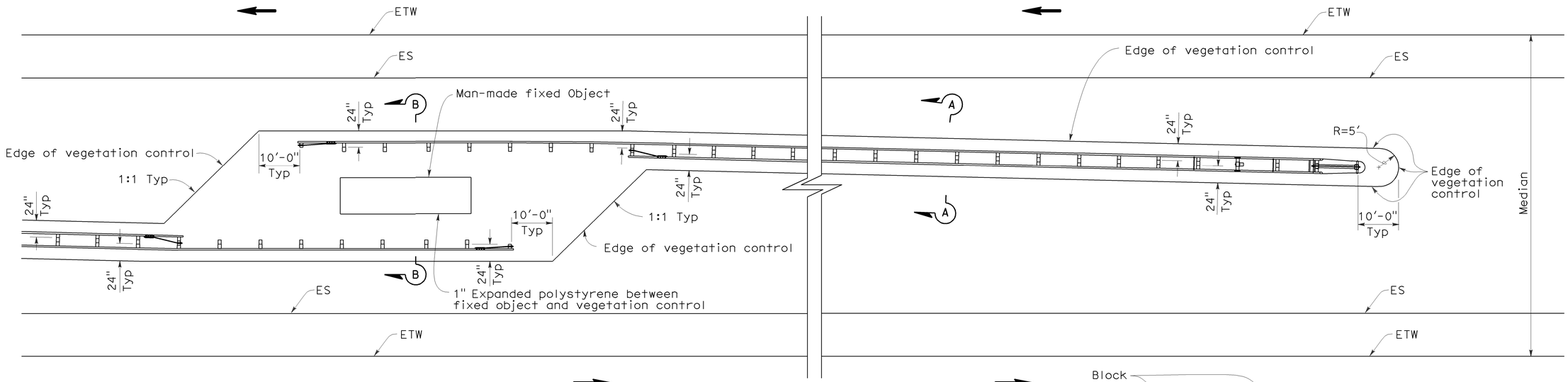

PLAN

FIXED OBJECT(S) IN MEDIAN

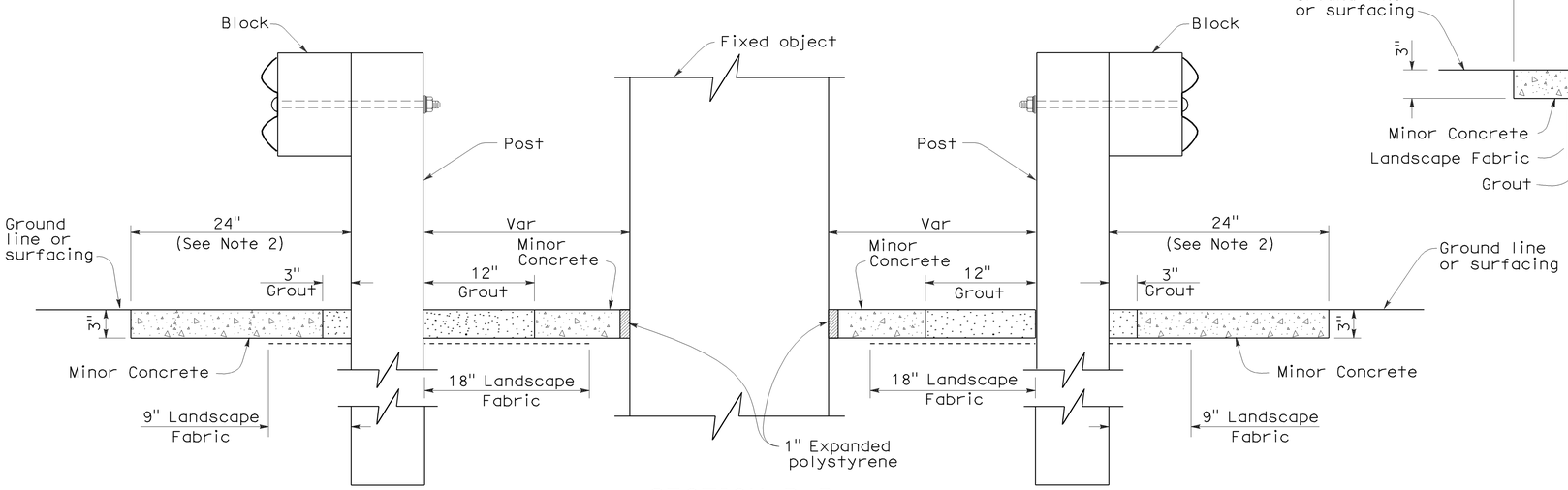

SECTION B-B

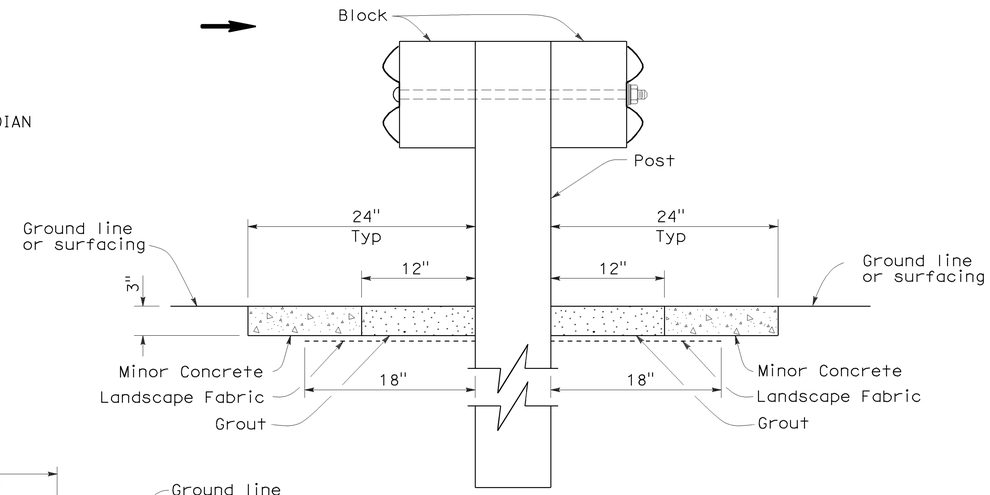

SECTION A-A

STATE OF CALIFORNIA
DEPARTMENT OF TRANSPORTATION

METAL BEAM GUARD RAILING TYPICAL VEGETATION CONTROL AT FIXED OBJECT

NO SCALE

NSP A77C9 DATED OCTOBER 20, 2006 SUPPLEMENTS THE STANDARD PLANS BOOK DATED MAY 2006.

NEW STANDARD PLAN NSP A77C9

2006 NEW STANDARD PLAN NSP A77C9

7-17-06

DIST	COUNTY	ROUTE	POST MILES TOTAL PROJECT	SHEET NO.	TOTAL SHEETS
03	Pla	80	5.1/14.5	39	59

Randell D. Hiatt
REGISTERED CIVIL ENGINEER

October 20, 2006
PLANS APPROVAL DATE

REGISTERED PROFESSIONAL ENGINEER
Randell D. Hiatt
No. C50200
Exp. 6-30-07
CIVIL
STATE OF CALIFORNIA

The State of California or its officers or agents shall not be responsible for the accuracy or completeness of electronic copies of this plan sheet.

To accompany plans dated 6-13-11

NOTES:

1. See New Standard Plan NSP A77C5 for additional vegetation control details.
2. Where dike is constructed under railing, construct vegetation control to back edge of dike. Where paved shoulder is constructed within 24" in front of the post, construct vegetation control to the edge of paved shoulder.
3. Direction of adjacent traffic indicated by ←.

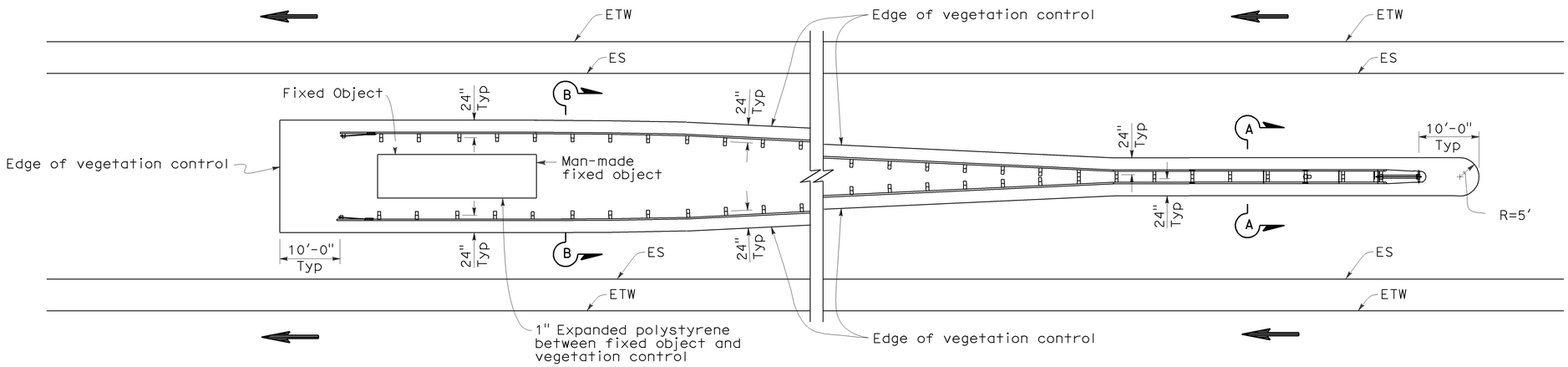

PLAN

FIXED OBJECT(S) BETWEEN SEPARATE ROADBEDS
(ONE-WAY TRAFFIC)

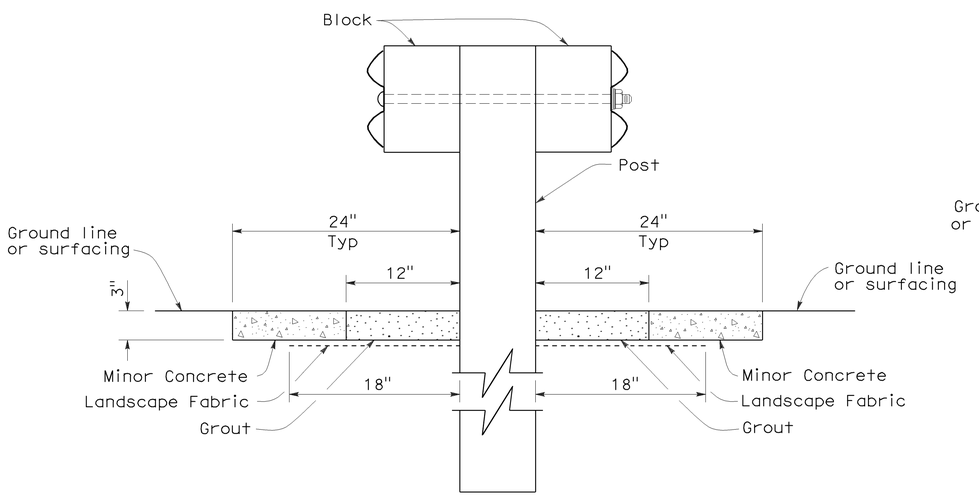

SECTION A-A

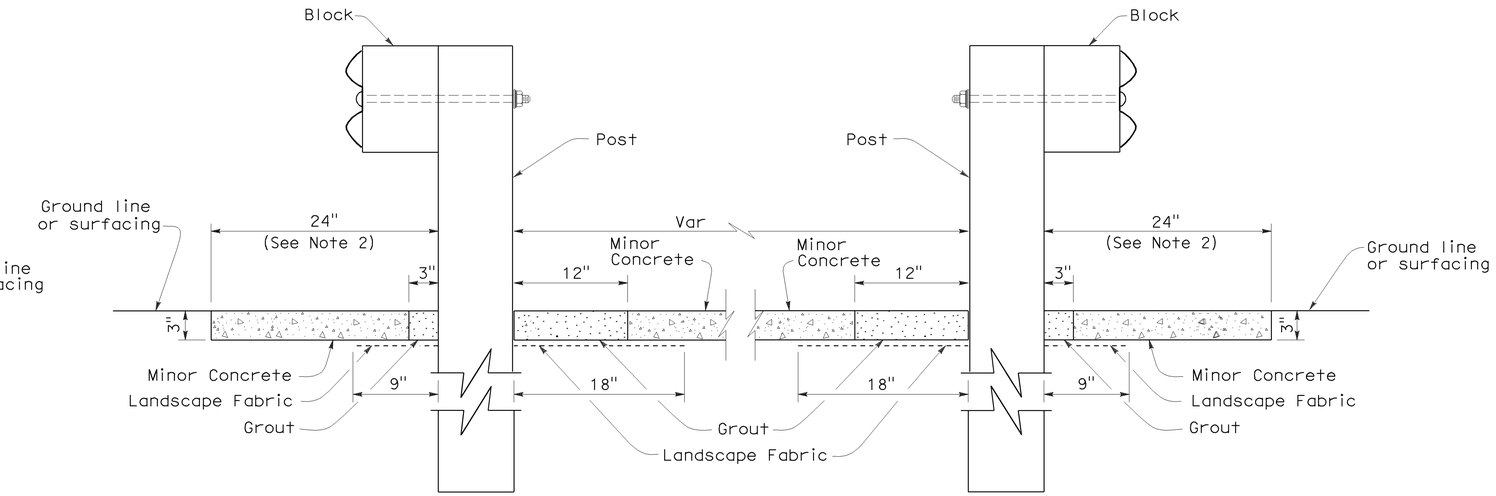

SECTION B-B

STATE OF CALIFORNIA
DEPARTMENT OF TRANSPORTATION

METAL BEAM GUARD RAILING TYPICAL VEGETATION CONTROL AT FIXED OBJECT

NO SCALE

NSP A77C10 DATED OCTOBER 20, 2006 SUPPLEMENTS THE STANDARD PLANS BOOK DATED MAY 2006.

NEW STANDARD PLAN NSP A77C10

2006 NEW STANDARD PLAN NSP A77C10

7-17-06

DIST	COUNTY	ROUTE	POST MILES TOTAL PROJECT	SHEET NO.	TOTAL SHEETS
03	Pla	80	5.1/14.5	40	59

Randell D. Hiatt
REGISTERED CIVIL ENGINEER

June 6, 2008
PLANS APPROVAL DATE

REGISTERED PROFESSIONAL ENGINEER
Randell D. Hiatt
No. C50200
Exp. 6-30-09
CIVIL
STATE OF CALIFORNIA

The State of California or its officers or agents shall not be responsible for the accuracy or completeness of electronic copies of this plan sheet.

To accompany plans dated 6-13-11

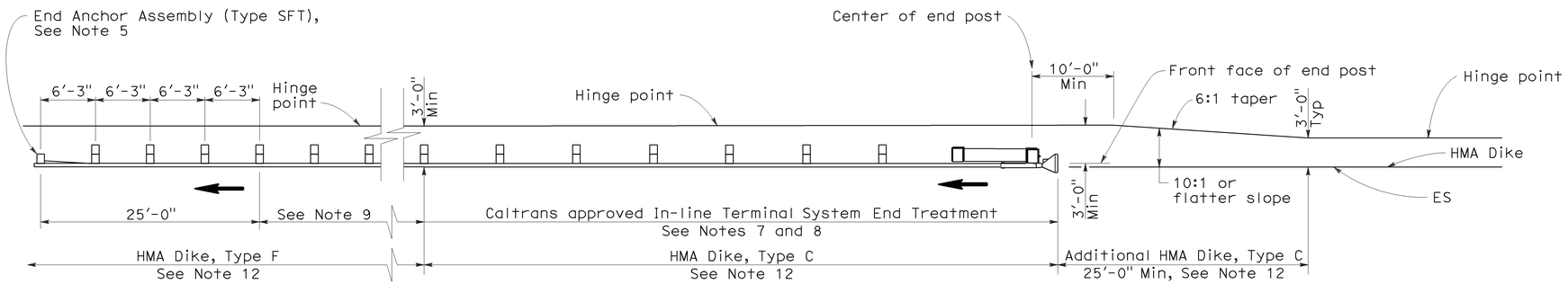

TYPE 11A LAYOUT

(EMBANKMENT GUARD INSTALLATION WITH IN-LINE END TREATMENT AT TRAFFIC APPROACH END OF RAILING)
See Note 6

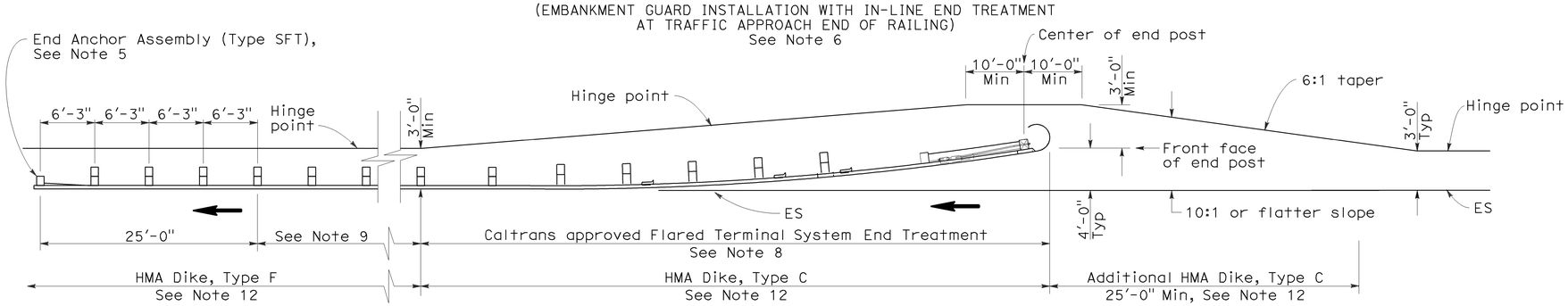

TYPE 11B LAYOUT

(EMBANKMENT GUARD RAILING INSTALLATION WITH FLARED END TREATMENT AT TRAFFIC APPROACH END OF RAILING)
See Note 6

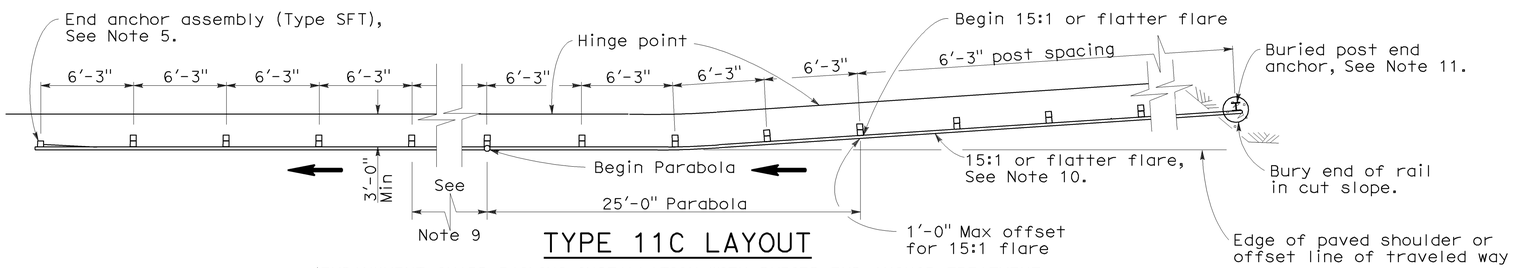

TYPE 11C LAYOUT

(EMBANKMENT GUARD RAILING INSTALLATION WITH BURIED END ANCHOR TREATMENT AT TRAFFIC APPROACH END OF RAILING)
See Notes 6 and 12

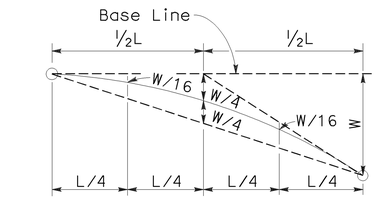

TYPICAL PARABOLIC LAYOUT

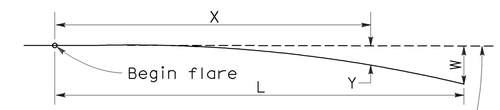

Base Line (Edge of paved shoulder or offset line of edge of traveled way)

$$Y = \frac{WX^2}{L^2}$$

Y = Offset from base line
W = Maximum offset
X = Distance along base line
L = Length of flare

PARABOLIC FLARE OFFSETS

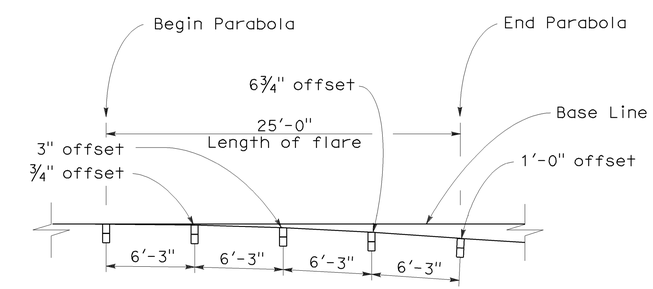

TYPICAL FLARE OFFSETS FOR 1 FOOT MAX END OFFSET

NOTES:

1. Line post, blocks and hardware to be used are shown on Standard Plans A77A1, A77A2, A77B1, A77C1, and A77C2.
2. Guard rail post spacing to be 6'-3" center to center, except as otherwise noted.
3. Except as noted, line posts are 6" x 8" x 6'-0" wood with 6" x 8" x 1'-2" wood blocks. W6 x 9 steel posts, 6'-0" in length, with 6" x 8" x 1'-2" notched wood blocks or recycled plastic blocks may be used for 6" x 8" x 6'-0" wood post with 6" x 8" x 1'-2" wood blocks where applicable and when specified.
4. Direction of adjacent traffic indicated by ➡.
5. For End Anchor Assembly (Type SFT) details, see Standard Plan A77H1.
6. Layout Types 11A, 11B or 11C are typically used where guard railing is recommended to shield embankment slopes and a crashworthy end treatment is required for only one direction of traffic.
7. In-line Terminal System End Treatments are used where site conditions will not accommodate a flared end treatment.
8. The type of terminal system end treatment to be used will be shown on the Project Plans.
9. Dependent on site conditions (embankment height and side slope), construction of additional guard railing (length equal to multiples of 12'-6" with 6'-3" post spacing) may be advisable.
10. The 15:1 or flatter flare used with buried end anchors is based on the edge of the paved shoulder or offset line of edge of the traveled way. The length of guard railing within the 15:1 or flatter flare is based on site conditions and should be a length equal to multiples of 12'-6".
11. For details of the buried post end anchor used with Type 11C Layout, see Standard Plan A77I2.
12. Where placement of dike is required with guard railing installations, see Revised Standard Plan RSP A77C4 for dike positioning details.

STATE OF CALIFORNIA
DEPARTMENT OF TRANSPORTATION

METAL BEAM GUARD RAILING TYPICAL LAYOUTS FOR EMBANKMENTS

NO SCALE

RSP A77E1 DATED JUNE 6, 2008 SUPERSEDES STANDARD PLAN A77E1 DATED MAY 1, 2006 - PAGE 48 OF THE STANDARD PLANS BOOK DATED MAY 2006.

REVISED STANDARD PLAN RSP A77E1

2006 REVISED STANDARD PLAN RSP A77E1

12-10-07

DIST	COUNTY	ROUTE	POST MILES TOTAL PROJECT	SHEET NO.	TOTAL SHEETS
03	Pla	80	5.1/14.5	41	59

Randell D. Hiatt
REGISTERED CIVIL ENGINEER

June 6, 2008
PLANS APPROVAL DATE

REGISTERED PROFESSIONAL ENGINEER
Randell D. Hiatt
No. C50200
Exp. 6-30-09
CIVIL
STATE OF CALIFORNIA

The State of California or its officers or agents shall not be responsible for the accuracy or completeness of electronic copies of this plan sheet.

To accompany plans dated 6-13-11

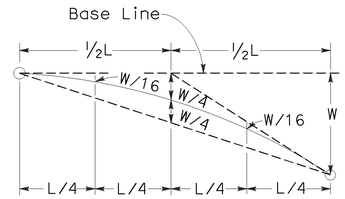

TYPICAL PARABOLIC LAYOUT

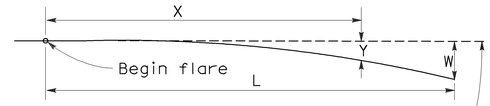

Base Line (Edge of paved shoulder or offset line of edge of traveled way)

$$Y = \frac{WX^2}{L^2}$$

Y = Offset from base line
W = Maximum offset
X = Distance along base line
L = Length of flare

PARABOLIC FLARE OFFSETS

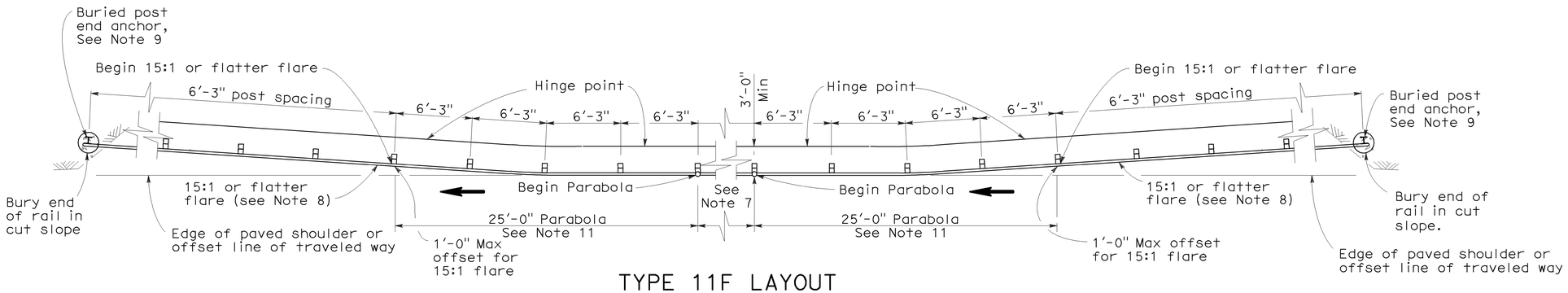

TYPE 11F LAYOUT

(EMBANKMENT GUARD RAILING INSTALLATION WITH A BURIED END ANCHOR TREATMENT AT EACH END OF RAILING)
See Notes 5 and 10

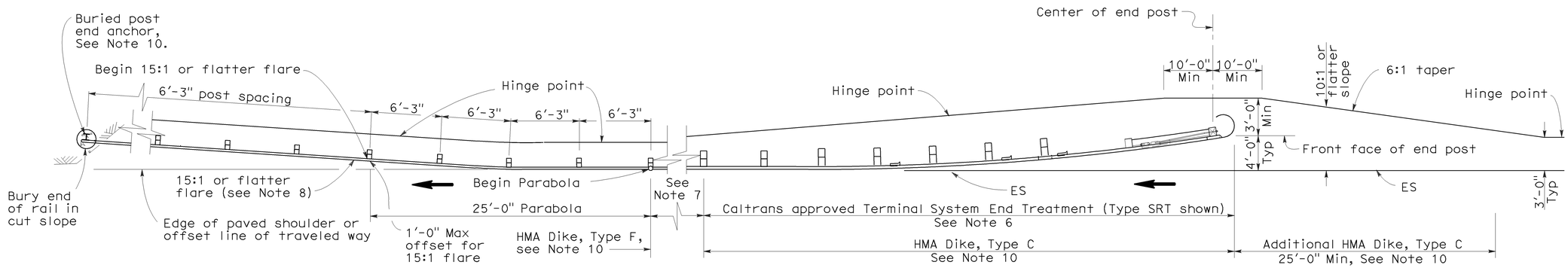

TYPE 11G LAYOUT

(EMBANKMENT GUARD RAILING INSTALLATION WITH FLARED END TREATMENT AND A BURIED END ANCHOR TREATMENT AT THE ENDS OF RAILING)
See Notes 5 and 10

NOTES:

1. Line post, blocks and hardware to be used are shown on Standard Plans A77A1, A77A2, A77B1, A77C1 and A77C2.
2. Guard rail post spacing to be 6'-3" center to center, except as otherwise noted.
3. Except as noted, line posts are 6" x 8" x 6'-0" wood with 6" x 8" x 1'-2" wood blocks. W6 x 9 steel posts, 6'-0" in length, with 6" x 8" x 1'-2" notched wood blocks or plastic blocks may be used for 6" x 8" x 6'-0" wood post with 6" x 8" x 1'-2" wood blocks where applicable and when specified.
4. Direction of adjacent traffic indicated by ⟶.
5. Layout Types 11D through 11L, shown on the A77E Series of Revised Standard Plans, are typically used where guard railing is recommended to shield embankment slopes and a crashworthy end treatment is required for both directions of traffic.
6. The type of terminal system end treatment to be used will be shown on the Project Plans.
7. Dependent on site conditions (embankment height and side slope), construction of additional guard railing (length equal to multiples of 12'-6" with 6'-3" post spacing) may be advisable.
8. The 15:1 or flatter flare used with buried end anchors is based on the edge of the paved shoulder or offset line of edge of the traveled way. The length of guard railing within the 15:1 or flatter flare is based on site conditions and should be a length equal to multiples of 12'-6".
9. For details of the buried post end anchor used with Type 11F and 11G Layouts, see Standard Plan A77I2.
10. Where placement of dike is required with guard railing installations, see Revised Standard Plan RSP A77C4 for dike positioning details.
11. For typical flare offsets for 25'-0" length parabola with maximum offset of 1'-0", see Revised Standard Plan RSP A77E1.

STATE OF CALIFORNIA
DEPARTMENT OF TRANSPORTATION

METAL BEAM GUARD RAILING TYPICAL LAYOUTS FOR EMBANKMENTS

NO SCALE

RSP A77E3 DATED JUNE 6, 2008 SUPERSEDES STANDARD PLAN A77E3 DATED MAY 1, 2006 - PAGE 50 OF THE STANDARD PLANS BOOK DATED MAY 2006.

REVISED STANDARD PLAN RSP A77E3

2006 REVISED STANDARD PLAN RSP A77E3

12-10-07

DIST	COUNTY	ROUTE	POST MILES TOTAL PROJECT	SHEET NO.	TOTAL SHEETS
03	Pla	80	5.1/14.5	42	59

Randell D. Hiatt
REGISTERED CIVIL ENGINEER

June 6, 2008
PLANS APPROVAL DATE

REGISTERED PROFESSIONAL ENGINEER
Randell D. Hiatt
No. C50200
Exp. 6-30-09
CIVIL
STATE OF CALIFORNIA

The State of California or its officers or agents shall not be responsible for the accuracy or completeness of electronic copies of this plan sheet.

To accompany plans dated 6-13-11

2006 REVISED STANDARD PLAN RSP A77F1

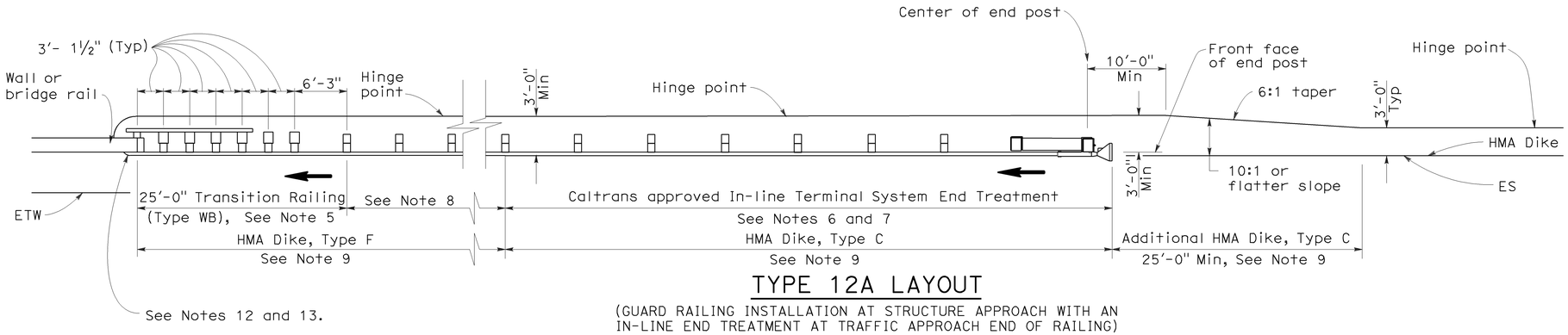

TYPE 12A LAYOUT

(GUARD RAILING INSTALLATION AT STRUCTURE APPROACH WITH AN IN-LINE END TREATMENT AT TRAFFIC APPROACH END OF RAILING)
See Notes 10

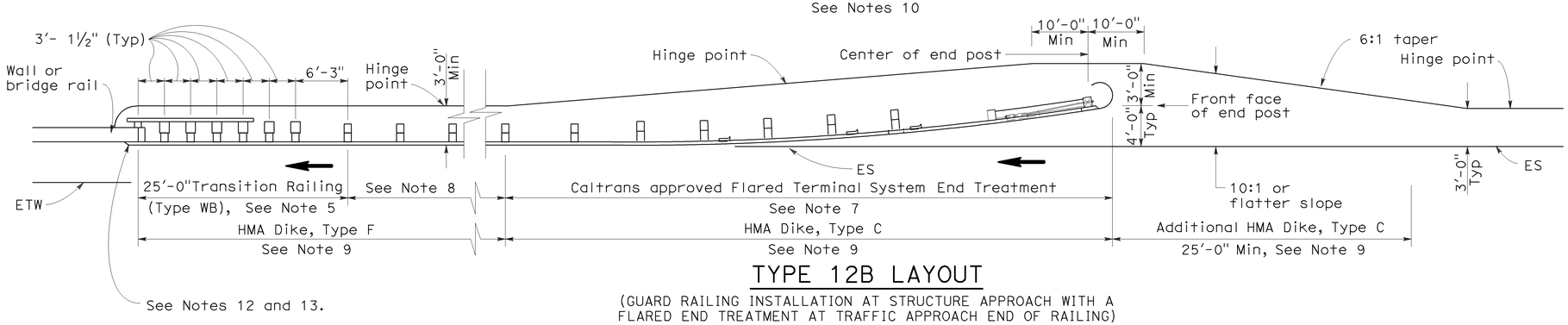

TYPE 12B LAYOUT

(GUARD RAILING INSTALLATION AT STRUCTURE APPROACH WITH A FLARED END TREATMENT AT TRAFFIC APPROACH END OF RAILING)
See Notes 10

NOTES:

1. Line post, blocks and hardware to be used are shown on Standard Plans A77A1, A77A2, A77B1, A77C1 and A77C2.
2. Guard rail post spacing to be 6'-3" center to center, except as otherwise noted.
3. Except as noted, line posts are 6" x 8" x 6'-0" wood with 6" x 8" x 1'-2" wood blocks. W6 x 9 steel posts, 6'-0" in length, with 6" x 8" x 1'-2" notched wood blocks or plastic blocks may be used for 6" x 8" x 6'-0" wood posts with 6" x 8" x 1'-2" wood blocks where applicable and when specified.
4. Direction of adjacent traffic indicated by ➡.
5. For Transition Railing (Type WB) details for Types 12A and 12B Layouts, see Standard Plan A77J4.
6. In-line Terminal System End Treatments are used where site conditions will not accommodate a flared end treatment.
7. The type of terminal system end treatment to be used will be shown on the Project Plans.
8. Dependent on site conditions (embankment height, side slopes, or other fixed objects), it may be advisable to construct additional guard railing (a length equal to multiples of 12'-6" with 6'-3" post spacing) between the transition railing and end treatment.
9. Where placement of dike is required with guard railing installations, see Revised Standard Plan RSP A77C4 for dike positioning details.
10. Type 12A or Type 12B Layouts are typically used:
    a. To the right of approaching traffic, at the end of a structure, on two-lane conventional highway where the roadbed width across the structure is less than 40 feet.
    b. To the left of approaching traffic, at the end of a structure, on two-lane conventional highway where the roadbed width across the structure is less than 40 feet.
    c. To the right of approaching traffic at the end of each structure on multilane freeways or expressways with separate adjacent or parallel bridges.
    d. To the right of approaching traffic at the end of the structure on multilane freeways or expressways with decked median on the bridge.
11. See Revised Standard Plan RSP A77F3 for typical layout used left of approaching traffic at the ends of each structure on multilane freeways or expressways with separate adjacent or parallel bridges.
12. For additional details of typical connections to bridge rail, see Connection Detail AA on Revised Standard Plans RSP A77J1 and RSP A77J2 and Connection Detail FF on Standard Plans A77K1 and A77K2.
13. For additional details of a typical connection to walls or abutments, see Standard Plan A77J3.

STATE OF CALIFORNIA
DEPARTMENT OF TRANSPORTATION

METAL BEAM GUARD RAILING TYPICAL LAYOUTS FOR STRUCTURE APPROACH

NO SCALE

RSP A77F1 DATED JUNE 6, 2008 SUPERSEDES STANDARD PLAN A77F1
DATED MAY 1, 2006 - PAGE 54 OF THE STANDARD PLANS BOOK DATED MAY 2006.

REVISED STANDARD PLAN RSP A77F1

12-10-07

DIST	COUNTY	ROUTE	POST MILES TOTAL PROJECT	SHEET NO.	TOTAL SHEETS
03	Pla	80	5.1/14.5	43	59

Randell D. Hiatt
REGISTERED CIVIL ENGINEER

June 6, 2008
PLANS APPROVAL DATE

REGISTERED PROFESSIONAL ENGINEER
Randell D. Hiatt
No. C50200
Exp. 6-30-09
CIVIL
STATE OF CALIFORNIA

The State of California or its officers or agents shall not be responsible for the accuracy or completeness of electronic copies of this plan sheet.

To accompany plans dated 6-13-11

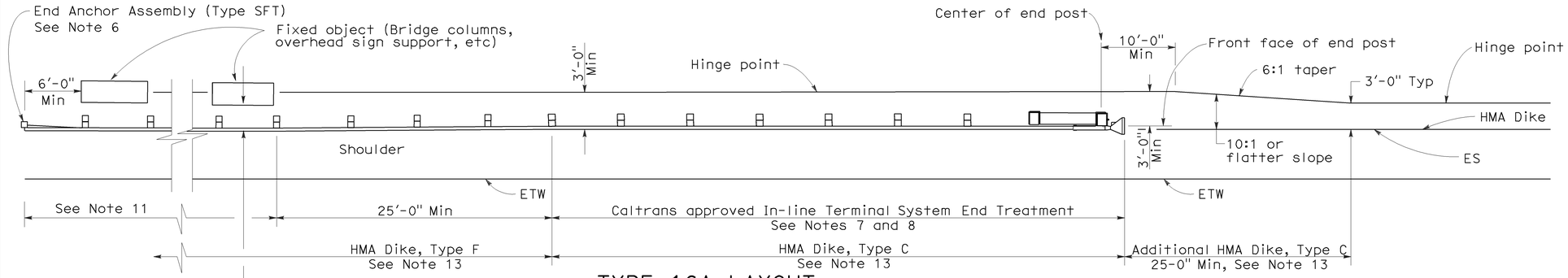

TYPE 16A LAYOUT

(GUARD RAILING INSTALLATION AT ROADSIDE FIXED OBJECT OR OBJECTS WITH AN IN-LINE END TREATMENT AT TRAFFIC APPROACH END OF RAILING)
See Notes 12 and 13

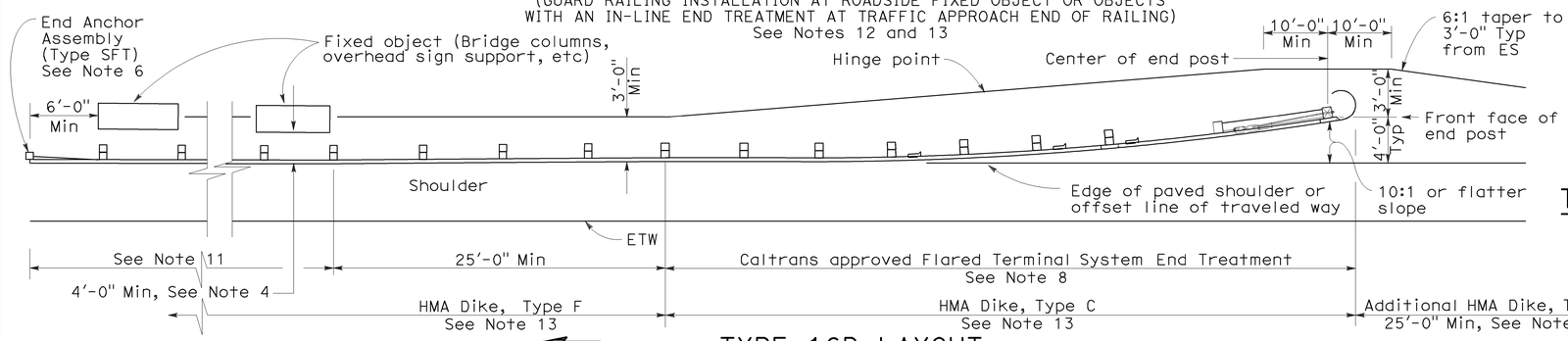

TYPE 16B LAYOUT

(GUARD RAILING INSTALLATION AT ROADSIDE FIXED OBJECT OR OBJECTS WITH A FLARED END TREATMENT AT TRAFFIC APPROACH END OF RAILING)
See Notes 12 and 13

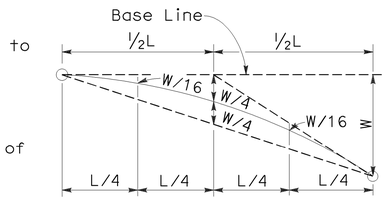

TYPICAL PARABOLIC LAYOUT

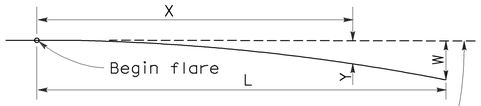

Base Line (Edge of paved shoulder or offset line of edge of traveled way)

$$Y = \frac{WX^2}{L^2}$$

Y = Offset from base line
W = Maximum offset
X = Distance along base line
L = Length of flare

PARABOLIC FLARE OFFSETS

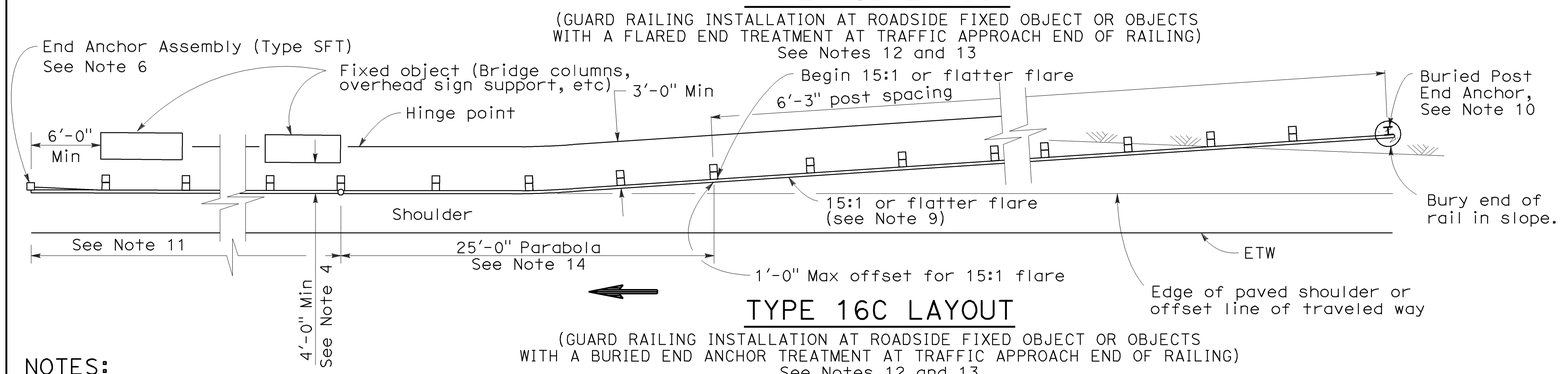

TYPE 16C LAYOUT

(GUARD RAILING INSTALLATION AT ROADSIDE FIXED OBJECT OR OBJECTS WITH A BURIED END ANCHOR TREATMENT AT TRAFFIC APPROACH END OF RAILING)
See Notes 12 and 13

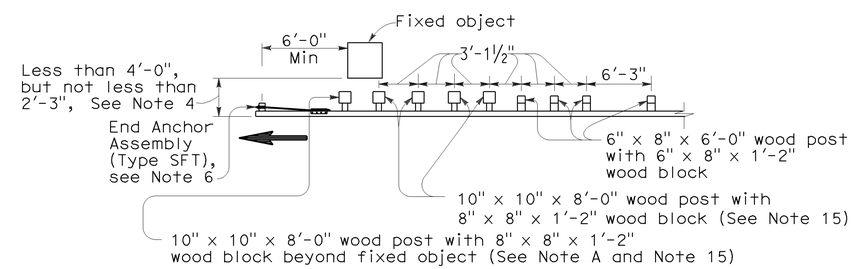

NOTE A: For a series of fixed objects (bridge columns, overhead sign supports, etc.) additional 10" x 10" x 8'-0" wood post with 8" x 8" x 1'-2" wood blocks at 3'-1½" center to center spacing are to be used between fixed objects.

STRENGTHENED RAILING SECTIONS FOR FIXED OBJECT

Use strengthened railing sections with Types 16A, 16B or 16C Layouts where minimum clearance between the face of the guard railing and fixed object(s) is less than 4'-0", but not less than 2'-3". See Note 4

NOTES:

1. Line post, blocks and hardware to be used are shown on Revised Standard Plans A77A1, A77A2, A77B1, A77C1 and A77C2.
2. Guard railing post spacing to be 6'-3" center to center, except as otherwise noted.
3. Except as noted, line posts are 6" x 8" x 6'-0" wood with 6" x 8" x 1'-2" wood blocks. W6 x 9 steel posts, 6'-0" in length, with 6" x 8" x 1'-2" notched wood blocks or notched recycled plastic blocks may be used for 6" x 8" x 6'-0" wood line posts with 6" x 8" x 1'-2" wood blocks where applicable and when specified.
4. A 4'-0" minimum clearance is required between the face of the railing and the face of a fixed object located directly behind standard guard railing sections with post spacing of 6'-3". Construct guard railing as shown in the detail "Strengthened Railing Sections for Fixed Objects" on this plan, where the clearance between the face of the railing and the face of a fixed object is less than 4'-0", but not less than 2'-3". Where the clearance is less than 2'-3", a concrete wall or barrier should be constructed to shield the fixed object(s).
5. Direction of adjacent traffic indicated by ⟶.
6. For End Anchor Assembly (Type SFT) details, see Standard Plan A77H1.
7. In-line Terminal System End Treatments are used where site conditions will not accommodate a flared end treatment.
8. The type of terminal system to be used will be shown on the Project Plans.
9. The 15:1 or flatter flare used with Type 16C Layout is based on the edge of the paved shoulder or offset line of edge of the traveled way. The length of guard railing within the 15:1 or flatter flare is based on site conditions and should be a length equal to multiples of 12'-6".
10. For details of the Buried Post End Anchor used with Type 16C Layout, see Standard Plan A77I2.
11. As site conditions dictate, construct additional guard railing to shield fixed object(s). Additional guard railing length equal to multiples of 12'-6". Post spacing at 6'-3" except as specified in Note 4.
12. Layout Types 16A, 16B or 16C are typically used where guard railing is recommended to shield roadside fixed object(s) and a crashworthy end treatment is required for only one direction of traffic.
13. Where placement of dike is required with guard railing, see Revised Standard Plan RSP A77C4 for dike positioning details.
14. For typical flare offsets for 25'-0" length parabola with maximum offset of 1'-0", see Revised Standard Plan RSP A77E1.
15. W6 x 15 steel post, 8'-0" in length, with 8" x 8" x 1'-2" notched wood block or notched recycled plastic blocks may be used in place of the 10" x 10" x 8'-0" wood post with 8" x 8" x 1'-2" wood block shown in the "Strengthened Railing Sections Detail".

STATE OF CALIFORNIA
DEPARTMENT OF TRANSPORTATION

METAL BEAM GUARD RAILING TYPICAL LAYOUTS FOR ROADSIDE FIXED OBJECTS

NO SCALE

RSP A77G3 DATED JUNE 6, 2008 SUPERSEDES STANDARD PLAN A77G3 DATED MAY 1, 2006 - PAGE 61 OF THE STANDARD PLANS BOOK DATED MAY 2006.

REVISED STANDARD PLAN RSP A77G3

2006 REVISED STANDARD PLAN RSP A77G3

12-10-07

Dist	COUNTY	ROUTE	POST MILES TOTAL PROJECT	SHEET No.	TOTAL SHEETS
03	Pla	80	5.1/14.5	44	59

Randell D. Hiatt
REGISTERED CIVIL ENGINEER

May 20, 2011
PLANS APPROVAL DATE

REGISTERED PROFESSIONAL ENGINEER
Randell D. Hiatt
No. C50200
Exp. 6-30-11
CIVIL
STATE OF CALIFORNIA

The State of California or its officers or agents shall not be responsible for the accuracy or completeness of electronic copies of this plan sheet.

To accompany plans dated 6-13-11

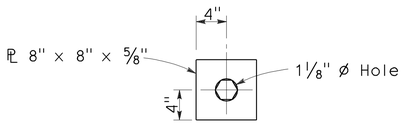

DETAIL A
CABLE CONNECTION
END PLATE

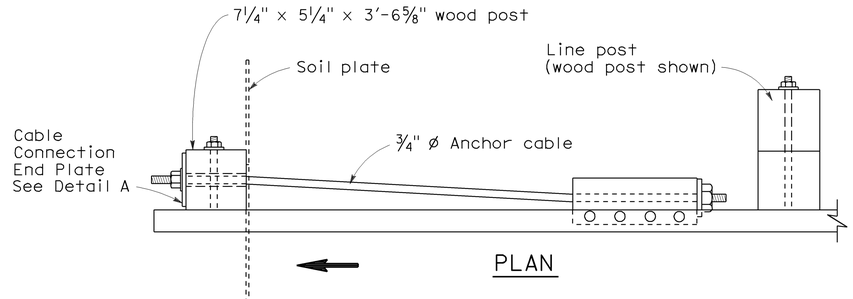

PLAN

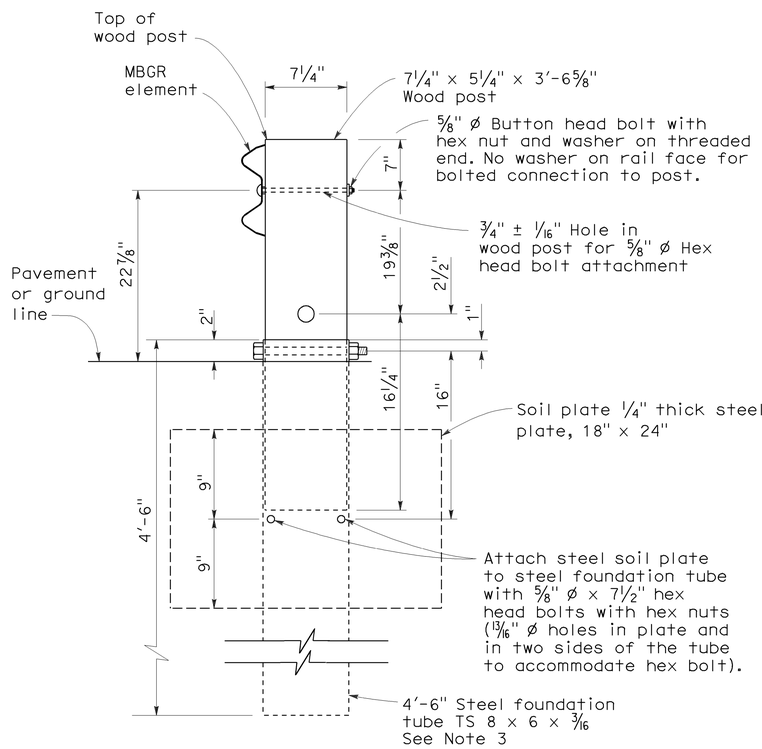

SECTION A-A

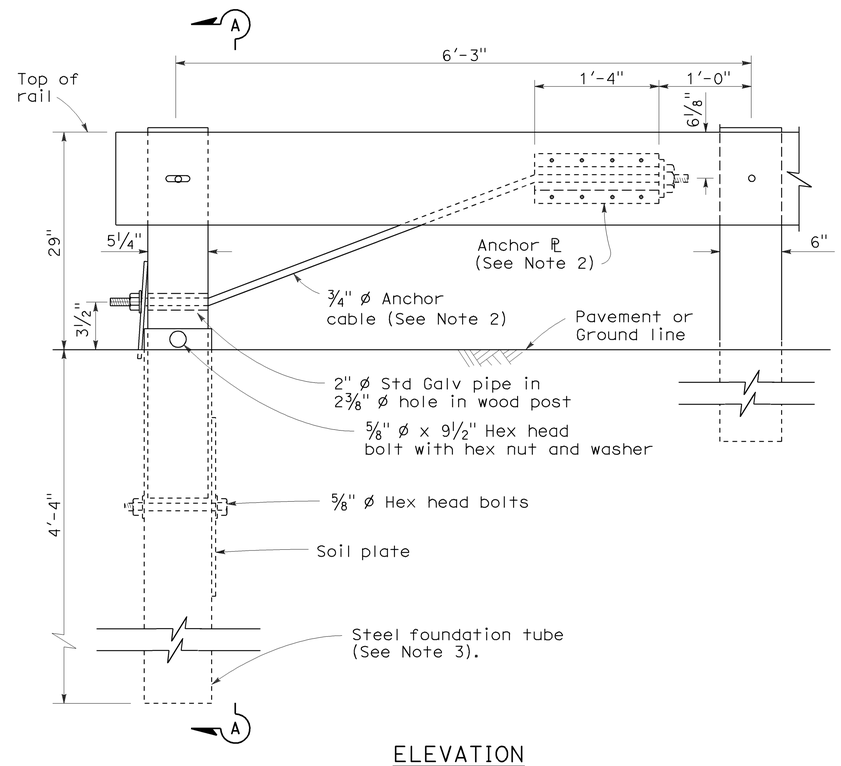

ELEVATION
END ANCHOR
ASSEMBLY (TYPE SFT)
See Note 1

NOTES:

1. See the A77E, A77F and A77G series of Standard Plans for typical use of End Anchor Assembly (Type SFT).
2. For details of the anchor plate and 3/4" cable, see Standard Plan A77H3.
3. A 6'-0" length steel foundation tube, TS 8 x 6 x 3/16, without a soil plate, may be furnished and installed in place of the 4'-6" length steel foundation tube and soil plate shown. Minimum embedment of the 6'-0" length tube shall be 5'-9". A 5/8" ø hex head bolt and nut shall be installed in the hole in the 6'-0" length tube to keep the wood post from dropping into the tube.
4. Direction of traffic indicated by ⟹.
5. Install line post, steel foundation tube and soil plate in soil.

STATE OF CALIFORNIA
DEPARTMENT OF TRANSPORTATION

METAL RAILING END ANCHOR ASSEMBLY (TYPE SFT)

NO SCALE

RSP A77H1 DATED MAY 20, 2011 SUPERSEDES STANDARD PLAN A77H1
DATED MAY 1, 2006 - PAGE 67 OF THE STANDARD PLANS BOOK DATED MAY 2006.

REVISED STANDARD PLAN RSP A77H1

2006 REVISED STANDARD PLAN RSP A77H1

2-10-07

Dist	COUNTY	ROUTE	POST MILES TOTAL PROJECT	SHEET No.	TOTAL SHEETS
03	Pla	80	5.1/14.5	45	59

Randell D. Hiatt
REGISTERED CIVIL ENGINEER

May 20, 2011
PLANS APPROVAL DATE

REGISTERED PROFESSIONAL ENGINEER
Randell D. Hiatt
No. C50200
Exp. 6-30-11
CIVIL
STATE OF CALIFORNIA

The State of California or its officers or agents shall not be responsible for the accuracy or completeness of electronic copies of this plan sheet.

To accompany plans dated 6-13-11

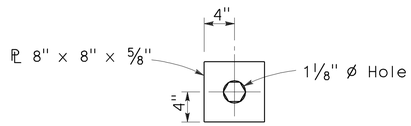

DETAIL A
CABLE CONNECTION
END PLATE

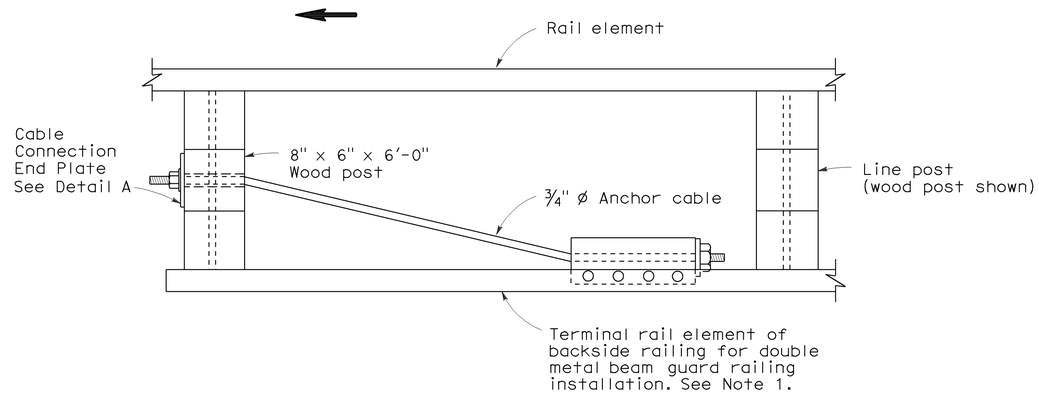

PLAN

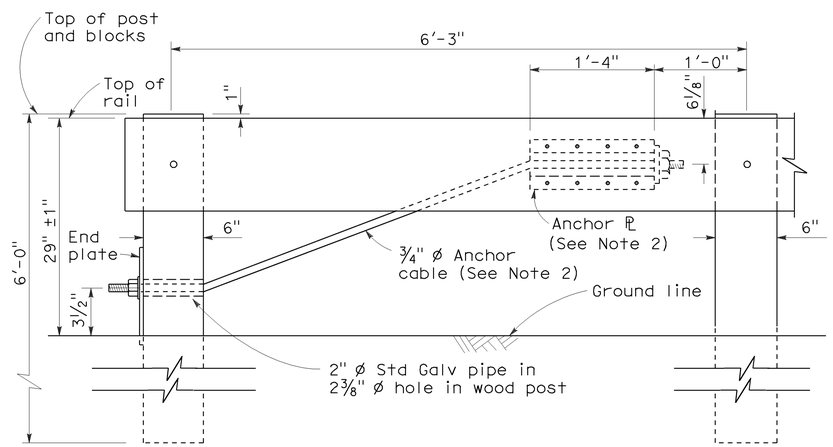

ELEVATION
RAIL TENSIONING
ASSEMBLY
See Note 1

NOTES:

1. See Standard Plan A77F3 and Standard Plan A77G1 for typical use of rail tensioning assembly.
2. For details of the anchor plate and 3/4" cable, see Standard Plan A77H3.
3. Direction of traffic indicated by ➡.

STATE OF CALIFORNIA
DEPARTMENT OF TRANSPORTATION

METAL RAILING
RAIL TENSIONING ASSEMBLY

NO SCALE

RSP A77H2 DATED MAY 20, 2011 SUPERSEDES STANDARD PLAN A77H2
DATED MAY 1, 2006 - PAGE 68 OF THE STANDARD PLANS BOOK DATED MAY 2006.

REVISED STANDARD PLAN RSP A77H2

2006 REVISED STANDARD PLAN RSP A77H2

3-10-11

Dist	COUNTY	ROUTE	POST MILES TOTAL PROJECT	SHEET No.	TOTAL SHEETS
03	Pla	80	5.1/14.5	46	59

Randell D. Hiatt
REGISTERED CIVIL ENGINEER

May 20, 2011
PLANS APPROVAL DATE

REGISTERED PROFESSIONAL ENGINEER
Randell D. Hiatt
No. C50200
Exp. 6-30-11
CIVIL
STATE OF CALIFORNIA

To accompany plans dated 6-13-11

The State of California or its officers or agents shall not be responsible for the accuracy or completeness of electronic copies of this plan sheet.

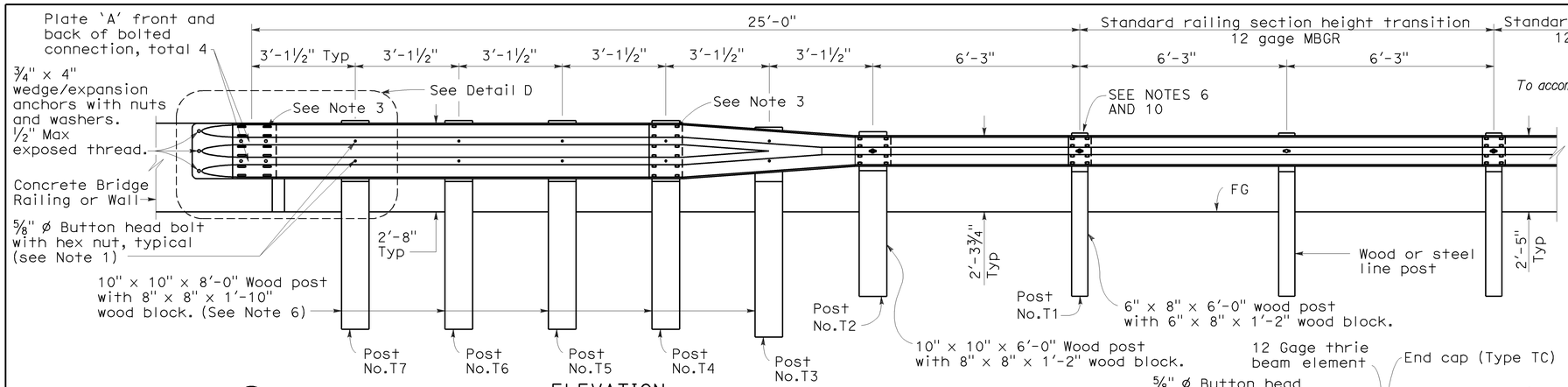

ELEVATION

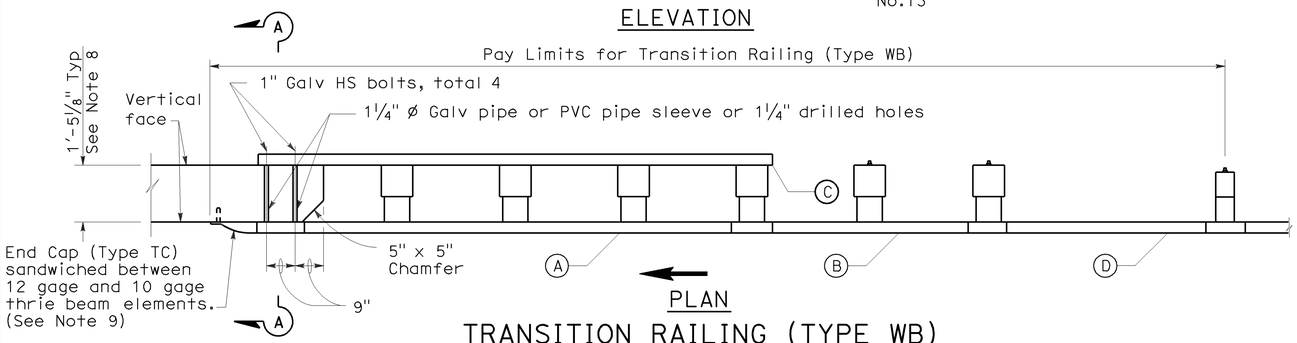

PLAN

TRANSITION RAILING (TYPE WB)

(No Blockout Attachment)

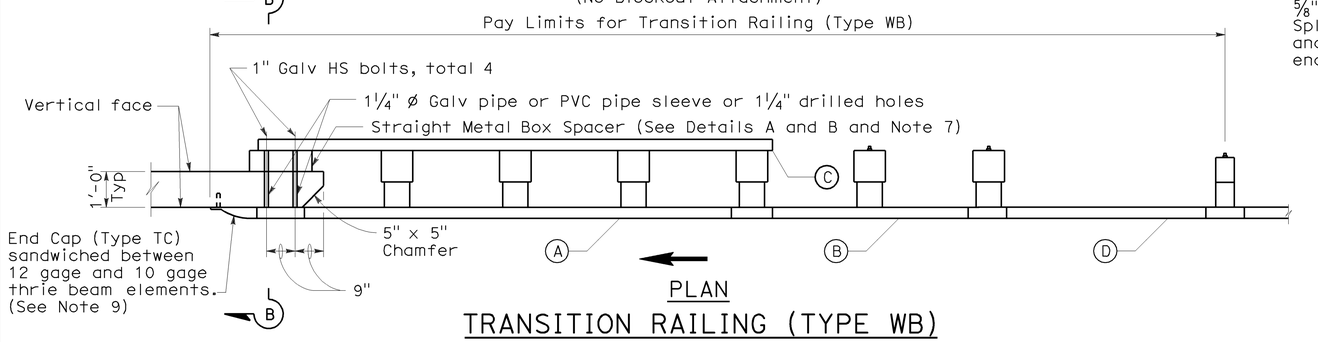

PLAN

TRANSITION RAILING (TYPE WB)

(Blockout Attachment)

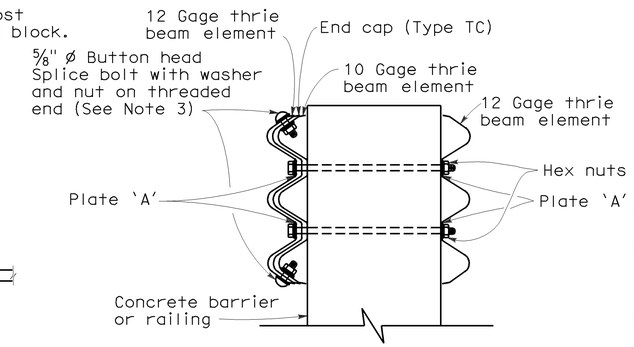

SECTION A-A

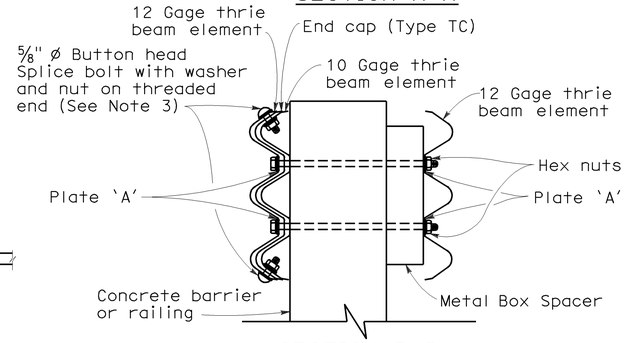

SECTION B-B

NOTES:

1. Use ⅝" ø Button head bolts and hex nuts for connections to posts. No washer on rail face for bolted connections to post.
2. The nested rail elements, end cap, and 'W' beam to thrie beam element may be spliced together prior to bolting the elements to the wood post and concrete barrier or railing.
3. Exterior splice bolt holes for rail element splices at Post No. T4 and the connection to the concrete barrier or railing shall be the standard 29/32" x 1⅛" slot size. Interior splice bolt holes at these locations may be increased up to 1¼" ø. Only the top 2 and the bottom 2 splice bolts with washers and nuts are required for rail splices at Post No. T4 and the connection to the concrete barrier or railing.
4. Direction of adjacent traffic indicated by ➡.
5. The top elevation of Posts No. T2 through No. T7 shall not project more than 1" above the top elevation of the rail element.
6. Typically, the railing connected to Transition Railing (Type WB) will be either standard railing section of metal beam guard railing with height transition ratio of 120:1 or an approved Caltrans end treatment attached to Post No. T1.
7. The depth of the metal box spacer varies from the 5⅛" to 1½" and is dependent on the width of the concrete railing or wall. The combined dimension for the depth of the metal box spacer plus the width of railing or wall is typically 17⅛". Where the space between the backside of the concrete railing or wall and the rear thrie beam element is less than 1½", metal plates similar to Plate 'A' are to be used as spacers.
8. Where the width of the concrete railing or wall is greater than 17⅛", wood blocks are to be used to fill the space created between the backside of Posts No. T4 through No. T7 and the rear thrie beam element. These wood blocks shall be 8" in width and 1'-2" in length. The dimension between the front thrie beam element and the rear thrie beam element is to match the width of the concrete railing or wall.
9. End cap may be installed over 12 gage and 10 gage thrie beam elements where transition railing is installed on the departure end of bridge railing.
10. Conform standard railing section height to 2'-3¾" at Post No. T1 using height transition ratio of 120:1.

LEGEND

- (A) Nested thrie beam elements (one 12 gage element nested over one 10 gage element).
- (B) One 10 gage "W" beam to thrie beam element.
- (C) One 12 gage thrie beam element.
- (D) One 10 gage "W" beam rail element (7'-3½" length)

10 gage = 0.135" thick

12 gage = 0.108" thick

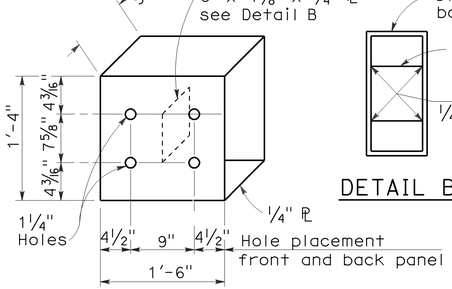

DETAIL A

STRAIGHT METAL BOX SPACER

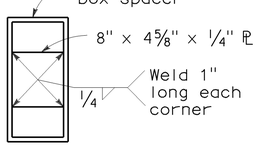

DETAIL B

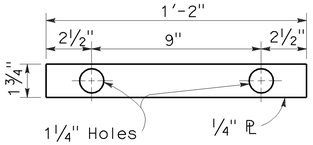

DETAIL C

PLATE 'A'

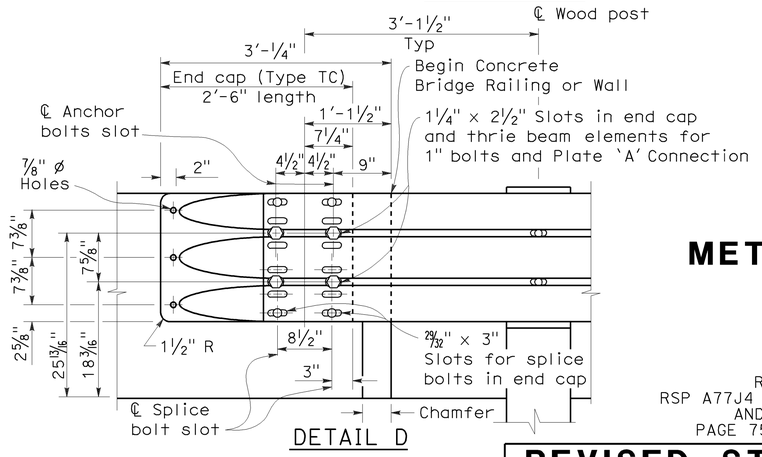

DETAIL D

STATE OF CALIFORNIA
DEPARTMENT OF TRANSPORTATION

METAL BEAM GUARD RAILING TRANSITION RAILING (TYPE WB)

NO SCALE

RSP A77J4 DATED MAY 20, 2011 SUPERSEDES
RSP A77J4 DATED JUNE 5, 2009, RSP A77J4 DATED JUNE 6, 2008
AND STANDARD PLAN A77J4 DATED MAY 1, 2006 -
PAGE 75 OF THE STANDARD PLANS BOOK DATED MAY 2006.

REVISED STANDARD PLAN RSP A77J4

2006 REVISED STANDARD PLAN RSP A77J4

DIST	COUNTY	ROUTE	POST MILES TOTAL PROJECT	SHEET NO.	TOTAL SHEETS
03	Pla	80	5.1/14.5	47	59

Randell D. Hiatt
REGISTERED CIVIL ENGINEER

June 6, 2008
PLANS APPROVAL DATE

REGISTERED PROFESSIONAL ENGINEER
Randell D. Hiatt
No. C50200
Exp. 6-30-09
CIVIL
STATE OF CALIFORNIA

The State of California or its officers or agents shall not be responsible for the accuracy or completeness of electronic copies of this plan sheet.

To accompany plans dated 6-13-11

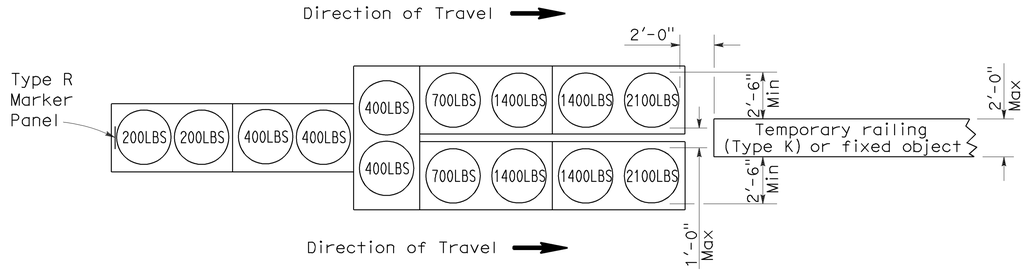

ARRAY 'TU14'

Approach speed 45 mph or more

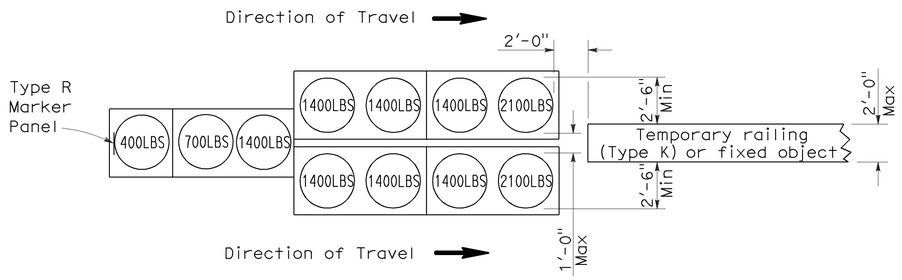

ARRAY 'TU11'

Approach speed less than 45 mph

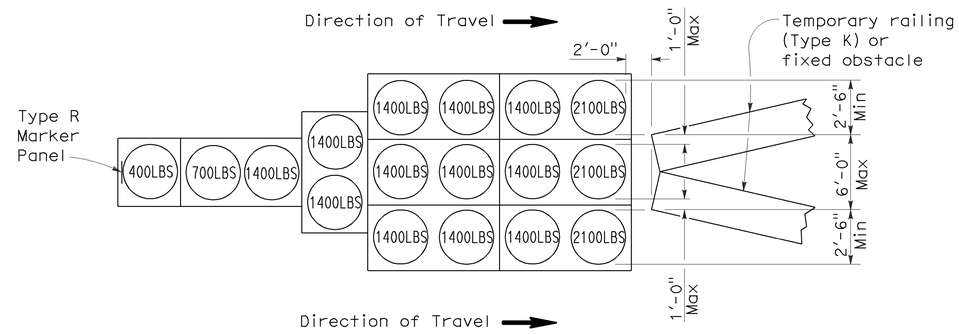

ARRAY 'TU17'

Approach speed less than 45 mph

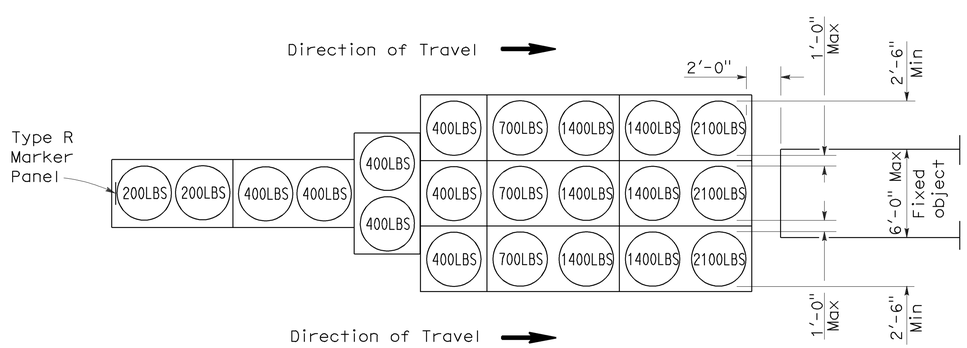

ARRAY 'TU21'

Approach speed 45 mph or more

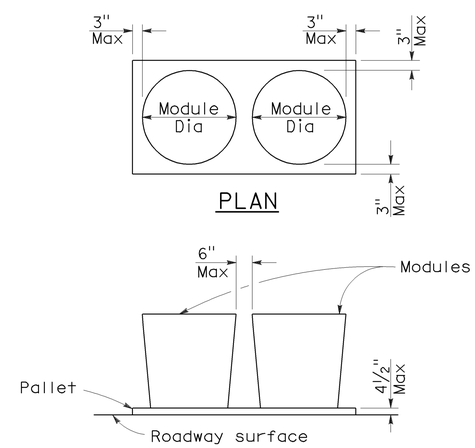

CRASH CUSHION PALLET DETAIL

See Note 7

NOTES:

1. (XXX) Indicates sand filled module location and weight of sand in pounds for each module. Module spacing is based on the greater diameter of the module.
2. All sand weights are nominal.
3. Temporary crash cushion arrays shall not encroach on the traveled way.
4. Place the top of Type R marker panel 1" below the module lid.
5. Refer to Standard Plan A73B for marker details.
6. Approach speeds indicated conform to NCHRP 350 Report criteria.
7. Use of pallets is optional.

STATE OF CALIFORNIA
DEPARTMENT OF TRANSPORTATION

TEMPORARY CRASH CUSHION, SAND FILLED (UNIDIRECTIONAL)

NO SCALE

RSP T1A DATED JUNE 6, 2008 SUPERSEDES STANDARD PLAN T1A
DATED MAY 1, 2006 - PAGE 211 OF THE STANDARD PLANS BOOK DATED MAY 2006.

REVISED STANDARD PLAN RSP T1A

2006 REVISED STANDARD PLAN RSP T1A

DIST	COUNTY	ROUTE	POST MILES TOTAL PROJECT	SHEET NO.	TOTAL SHEETS
03	Pla	80	5.1/14.5	48	59

Randell D. Hiatt
REGISTERED CIVIL ENGINEER

June 6, 2008
PLANS APPROVAL DATE

REGISTERED PROFESSIONAL ENGINEER
Randell D. Hiatt
No. C50200
Exp. 6-30-09
CIVIL
STATE OF CALIFORNIA

The State of California or its officers or agents shall not be responsible for the accuracy or completeness of electronic copies of this plan sheet.

To accompany plans dated 6-13-11

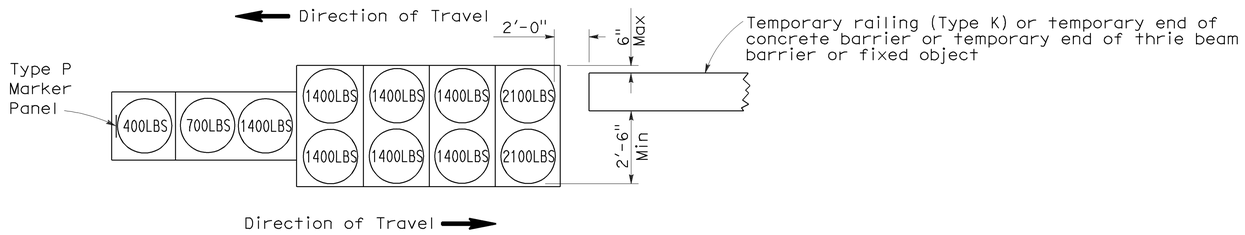

ARRAY 'TB11'

Approach speed less than 45 mph

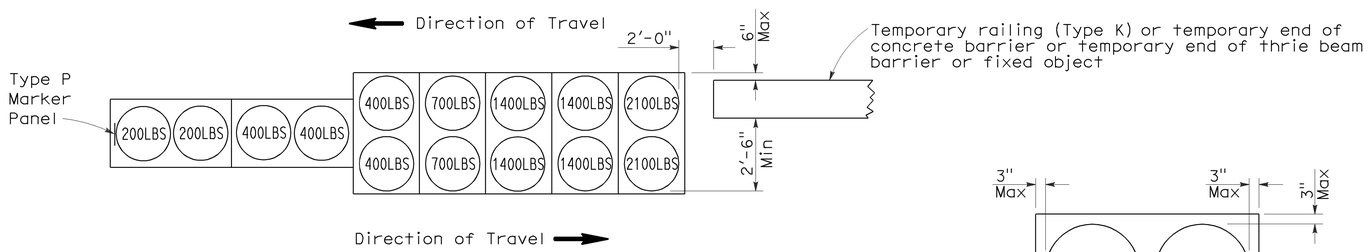

ARRAY 'TB14'

Approach speed 45 mph or more

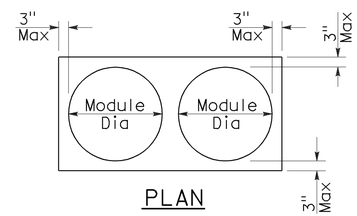

PLAN

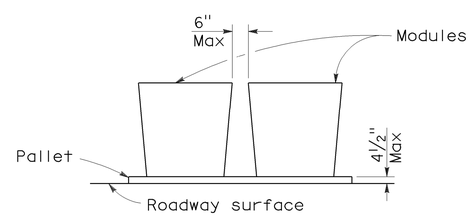

ELEVATION

CRASH CUSHION PALLET DETAIL

See Note 7

NOTES:

1. (XXX) Indicates sand filled module location and weight of sand in pounds for each module. Module spacing is based on the greater diameter of the module.
2. All sand weights are nominal.
3. Temporary crash cushion arrays shall not encroach on the traveled way.
4. Place the Type P marker panel so that the bottom of the panel rests upon the pallet.
5. Refer to Standard Plan A73B for marker details.
6. Approach speeds indicated conform to NCHRP 350 Report criteria.
7. Use of pallets is optional.

STATE OF CALIFORNIA
DEPARTMENT OF TRANSPORTATION

TEMPORARY CRASH CUSHION, SAND FILLED (BIDIRECTIONAL)

NO SCALE

RSP T1B DATED JUNE 6, 2008 SUPERSEDES STANDARD PLAN T1B
DATED MAY 1, 2006 - PAGE 212 OF THE STANDARD PLANS BOOK DATED MAY 2006.

REVISED STANDARD PLAN RSP T1B

2006 REVISED STANDARD PLAN RSP T1B

5-15-08

DIST	COUNTY	ROUTE	POST MILES TOTAL PROJECT	SHEET NO.	TOTAL SHEETS
03	Pla	80	5.1/14.5	49	59

Randell D. Hiatt
REGISTERED CIVIL ENGINEER

June 6, 2008
PLANS APPROVAL DATE

REGISTERED PROFESSIONAL ENGINEER
Randell D. Hiatt
No. C50200
Exp. 6-30-09
CIVIL
STATE OF CALIFORNIA

The State of California or its officers or agents shall not be responsible for the accuracy or completeness of electronic copies of this plan sheet.

To accompany plans dated 6-13-11

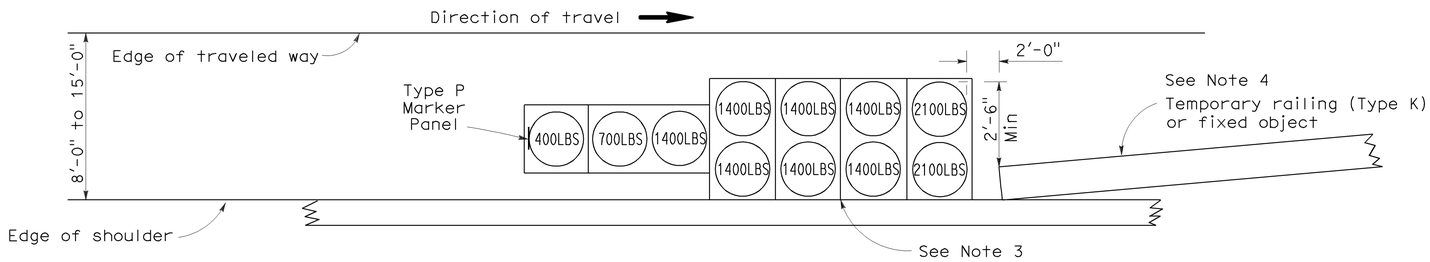

ARRAY 'TS11'

Approach speed less than 45 mph
See Note 9

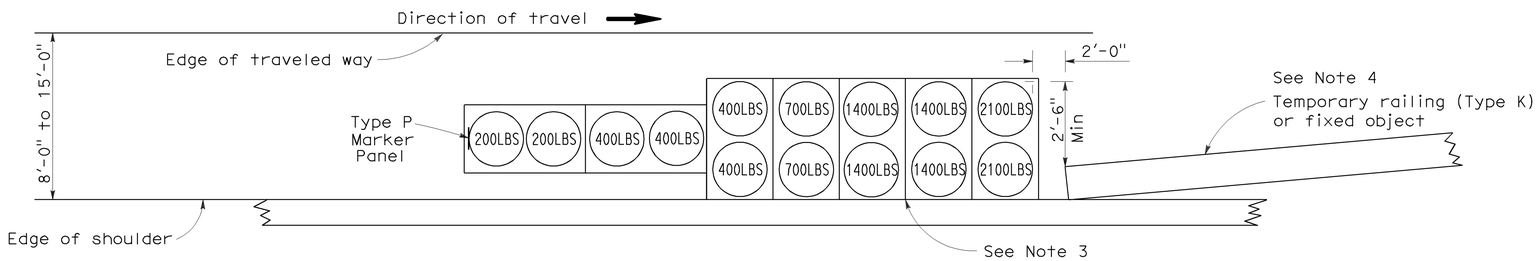

ARRAY 'TS14'

Approach speed 45 mph or more
See Note 9

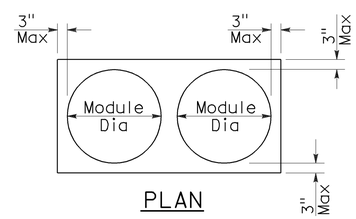

PLAN

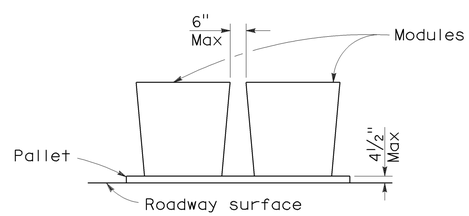

ELEVATION

CRASH CUSHION PALLET DETAIL

See Note 11

NOTES:

1. (XXX) Indicates sand filled module location and weight of sand in pounds for each module. Module spacing is based on the greater diameter of the module.
2. All sand weights are nominal.
3. The temporary crash cushion arrays shown on this plan shall be used only in locations where there will be traffic on one side of the temporary crash cushion array.
4. If the fixed object or approach end of the temporary railing is less than 15'-0" from the edge of traveled way, a temporary crash cushion is required in a construction or work zone.
5. Temporary crash cushion arrays shall not encroach on the traveled way.
6. Arrays for median shoulders shall conform to details shown on this plan for outside shoulders.
7. Place the Type P marker panel so that the bottom of the panel rests upon the pallet and faces traffic.
8. Refer to Standard Plan A73B for marker details.
9. For shoulder widths less than 8'-0", appropriate approved crash cushion protection, other than sand filled modules, shall be provided at fixed objects and at approach ends of temporary railing. The specific type of crash cushion shall be as shown on the project plans or as specified in the Special Provisions, or if not shown on the project plans or specified in the Special Provisions, shall be as approved by the Engineer.
10. Approach speeds indicated conform to NCHRP 350 Report criteria.
11. Use of pallets is optional.

STATE OF CALIFORNIA
DEPARTMENT OF TRANSPORTATION

TEMPORARY CRASH CUSHION, SAND FILLED (SHOULDER INSTALLATIONS)

NO SCALE

RSP T2 DATED JUNE 6, 2008 SUPERSEDES STANDARD PLAN T2
DATED MAY 1, 2006 - PAGE 213 OF THE STANDARD PLANS BOOK DATED MAY 2006.

REVISED STANDARD PLAN RSP T2

2006 REVISED STANDARD PLAN RSP T2

5-15-08

Dist	COUNTY	ROUTE	POST MILES TOTAL PROJECT	SHEET No.	TOTAL SHEETS
03	Pla	80	5.1/14.5	50	59

Randell D. Hiatt
REGISTERED CIVIL ENGINEER

May 20, 2011
PLANS APPROVAL DATE

REGISTERED PROFESSIONAL ENGINEER
Randell D. Hiatt
No. C50200
Exp. 6-30-11
CIVIL
STATE OF CALIFORNIA

The State of California or its officers or agents shall not be responsible for the accuracy or completeness of electronic copies of this plan sheet.

To accompany plans dated 6-13-11

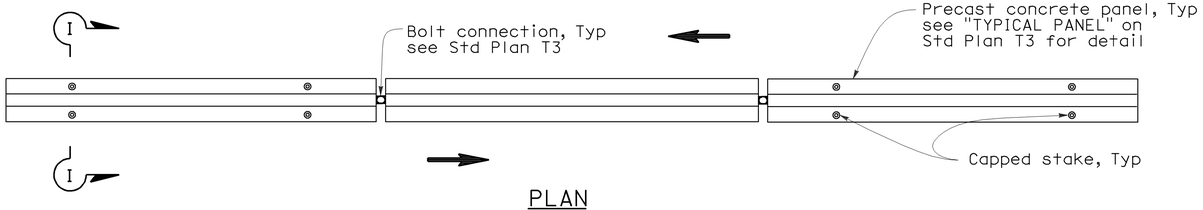

PLAN

RAILING STAKING CONFIGURATION FOR TWO-WAY TRAFFIC

See Note 1

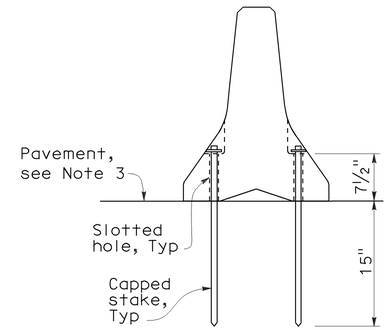

SECTION I-I

NOTES:

1. Where Type K Temporary Railing is placed as a temporary or long term barrier in two-way traffic on highways with less than 24" from the edge of traveled way, use four capped stakes per every other panel with end panels staked.
2. Where Type K Temporary Railing is placed 3" to 24" from the edge of an excavation on highways, use two capped stakes per panel along the traffic side.
3. Staked Type K Temporary Railing must be supported by at least 4" thick concrete, hot mix asphalt or existing asphalt concrete pavement.
4. The minimum yield strength for the washer must be 60,000 psi.
5. Direction of adjacent traffic indicated by ⟶.

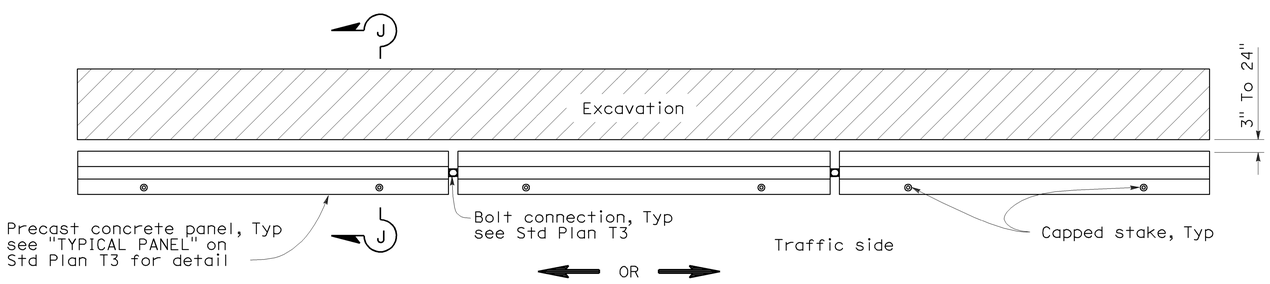

PLAN

RAILING STAKING CONFIGURATION ADJACENT TO AN EXCAVATION

See Note 2

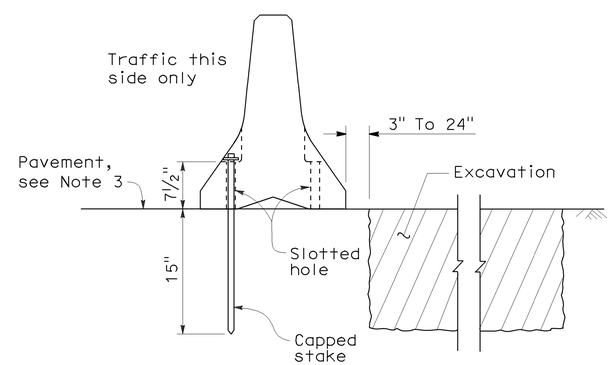

SECTION J-J

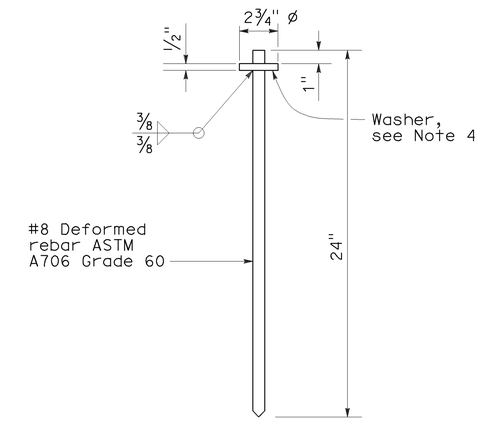

CAPPED STAKE DETAIL

STATE OF CALIFORNIA
DEPARTMENT OF TRANSPORTATION

TEMPORARY RAILING (TYPE K)

NO SCALE

NSP T3A DATED MAY 20, 2011 SUPPLEMENTS
THE STANDARD PLANS BOOK DATED MAY 2006.

NEW STANDARD PLAN NSP T3A

2006 NEW STANDARD PLAN NSP T3A

DIST	COUNTY	ROUTE	POST MILES TOTAL PROJECT	SHEET NO.	TOTAL SHEETS
03	Pla	80	5.1/14.5	51	59

LICENSED LANDSCAPE ARCHITECT

April 3, 2009
PLANS APPROVAL DATE

The State of California or its officers or agents shall not be responsible for the accuracy or completeness of electronic copies of this plan sheet.

LICENSED LANDSCAPE ARCHITECT — Robert B. Schott 3635 — Registered Date 11-30-10 Renewal Date 2-25-09 Date — STATE OF CALIFORNIA

To accompany plans dated 6-13-11

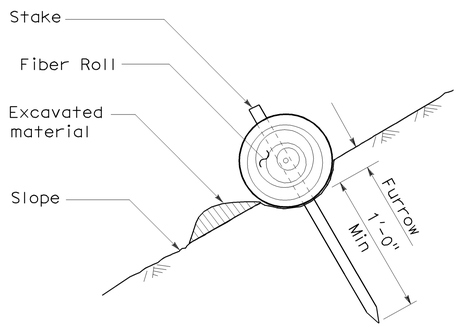

SECTION

TEMPORARY FIBER ROLL (TYPE 1)

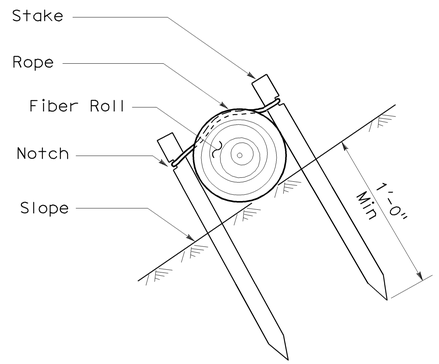

SECTION

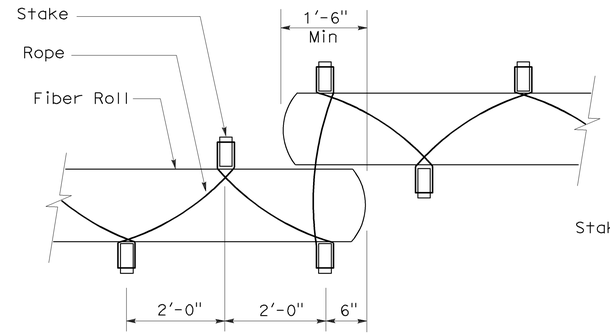

PLAN

TEMPORARY FIBER ROLL (TYPE 2)

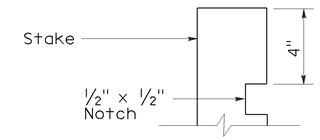

ELEVATION

STAKE NOTCH DETAIL

NOTES:

1. Temporary fiber roll spacing varies depending upon slope inclination.
2. Installations shown in the perspectives are for slope inclination of 10:1 and steeper.

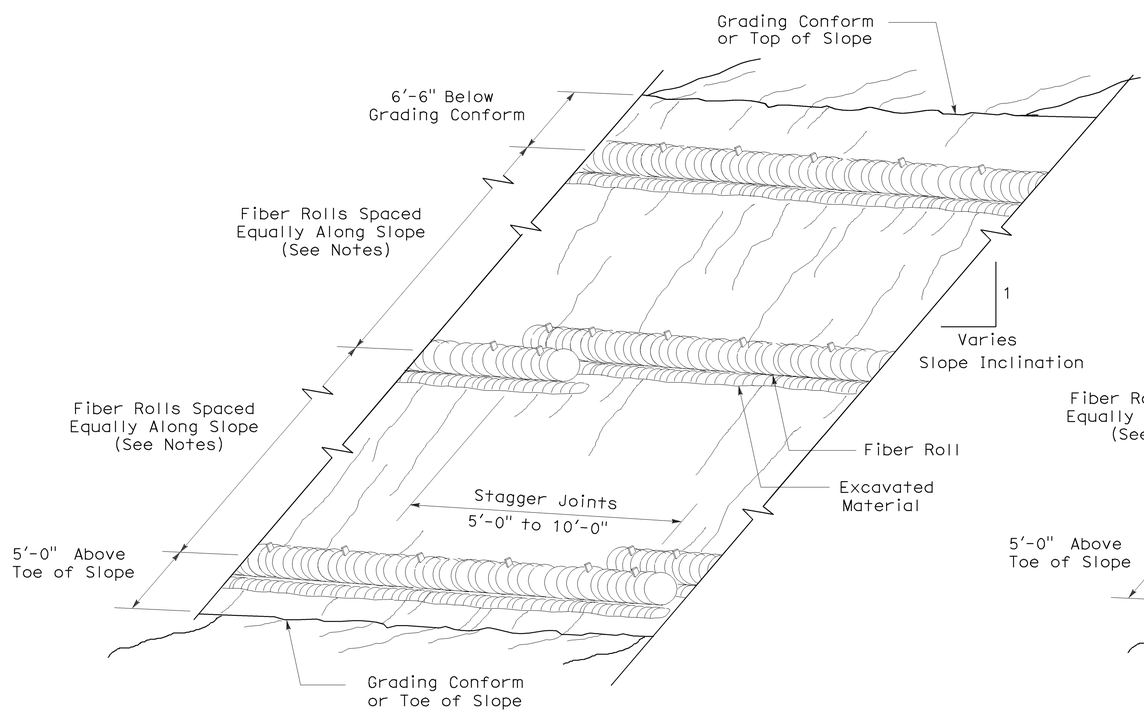

PERSPECTIVE

TEMPORARY FIBER ROLL (TYPE 1)

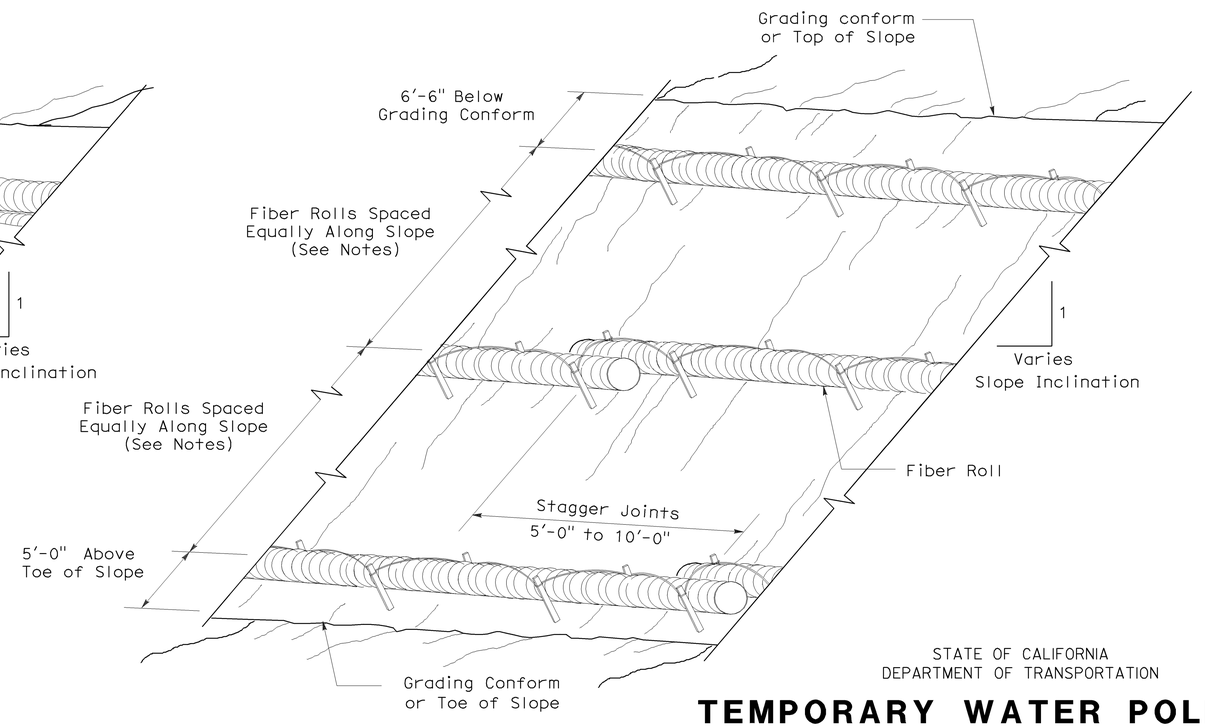

PERSPECTIVE

TEMPORARY FIBER ROLL (TYPE 2)

STATE OF CALIFORNIA
DEPARTMENT OF TRANSPORTATION

TEMPORARY WATER POLLUTION CONTROL DETAILS (TEMPORARY FIBER ROLL)

NO SCALE

RSP T56 DATED APRIL 3, 2009 SUPERSEDES STANDARD PLAN T56
DATED MAY 1, 2006 - PAGE 232 OF THE STANDARD PLANS BOOK DATED MAY 2006.

REVISED STANDARD PLAN RSP T56

2006 REVISED STANDARD PLAN RSP T56

2-23-09

DIST	COUNTY	ROUTE	POST MILES TOTAL PROJECT	SHEET NO.	TOTAL SHEETS
03	Pla	80	5.1/14.5	52	59

LICENSED LANDSCAPE ARCHITECT

August 15, 2008
PLANS Approval DATE

LICENSED LANDSCAPE ARCHITECT
Robert B. Schott 3635
Signature
11-04-08
Renewal Date
08-11-08
Date
STATE OF CALIFORNIA

The State of California or its officers or agents shall not be responsible for the accuracy or completeness of electronic copies of this plan sheet.

To accompany plans dated 6-13-11

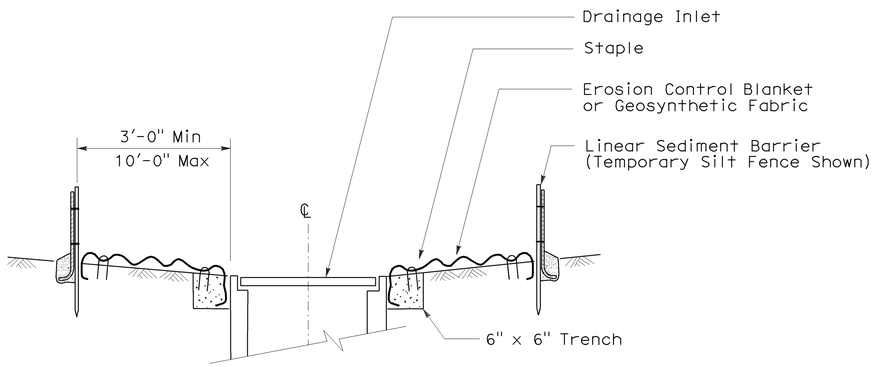

SECTION A-A

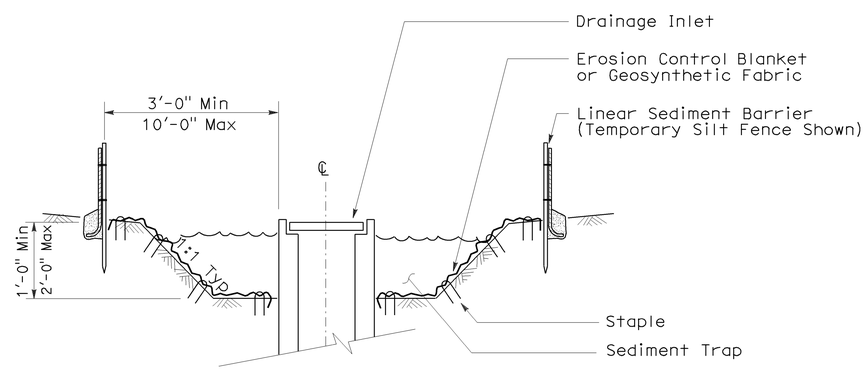

SECTION B-B

NOTES:

1. See Standard Plan T51 for Temporary Silt Fence.
2. Dimensions may vary to fit field conditions.

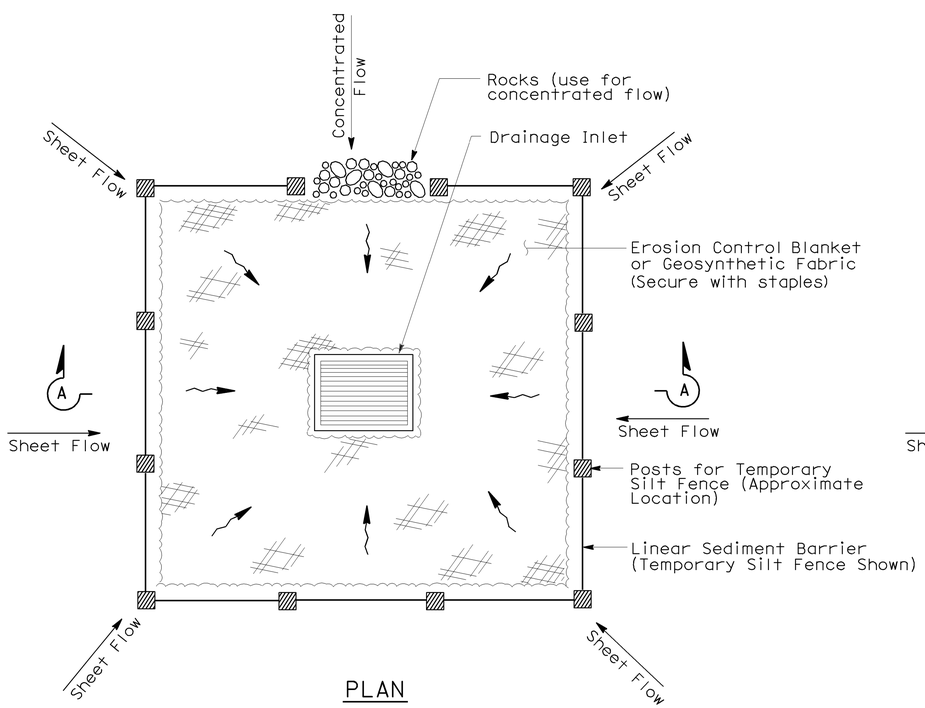

PLAN

TEMPORARY DRAINAGE INLET PROTECTION (TYPE 1)

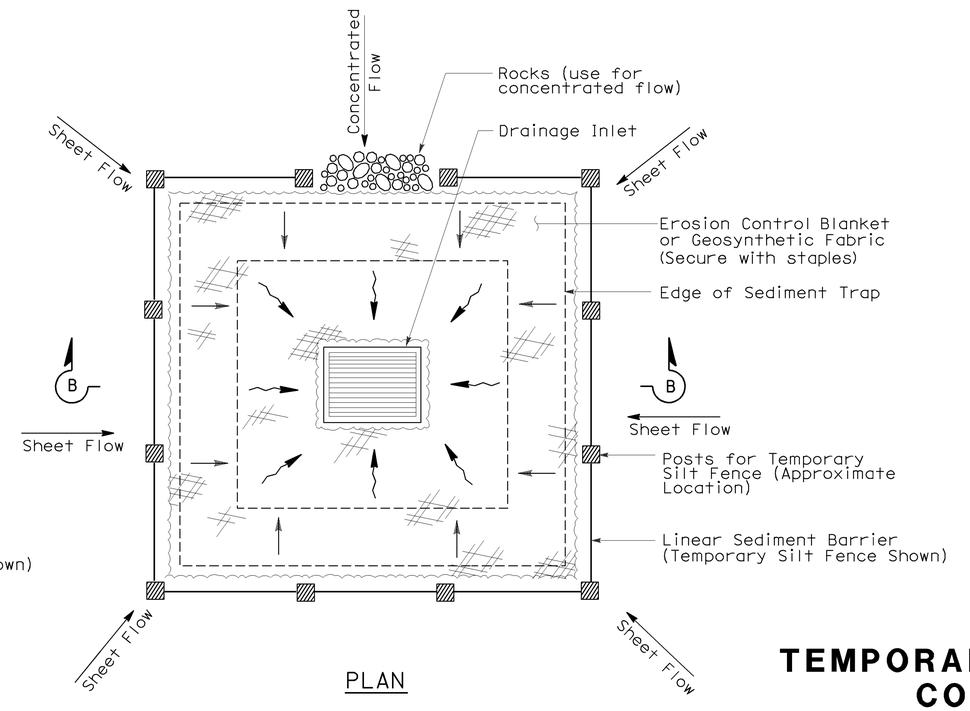

PLAN

TEMPORARY DRAINAGE INLET PROTECTION (TYPE 2) (EXCAVATED SEDIMENT TRAP)

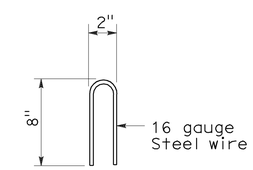

STAPLE DETAIL

STATE OF CALIFORNIA
DEPARTMENT OF TRANSPORTATION

TEMPORARY WATER POLLUTION CONTROL DETAILS (TEMPORARY DRAINAGE INLET PROTECTION)

NO SCALE

Nsp t61 dated august 15, 2008 supplements the standard plans book dated may 2006.

NEW STANDARD PLAN NSP T61

2006 NEW STANDARD PLAN NSP T61

7-11-08

DIST	COUNTY	ROUTE	POST MILES TOTAL PROJECT	SHEET NO.	TOTAL SHEETS
03	Pla	80	5.1/14.5	53	59

LICENSED LANDSCAPE ARCHITECT

August 15, 2008
PLANS APPROVAL DATE

LICENSED LANDSCAPE ARCHITECT ROBERT B. SCHOTT 3625 Signature 11-04-08 Renewal Date 08-11-08 Date STATE OF CALIFORNIA

The State of California or its officers or agents shall not be responsible for the accuracy or completeness of electronic copies of this plan sheet.

To accompany plans dated 6-13-11

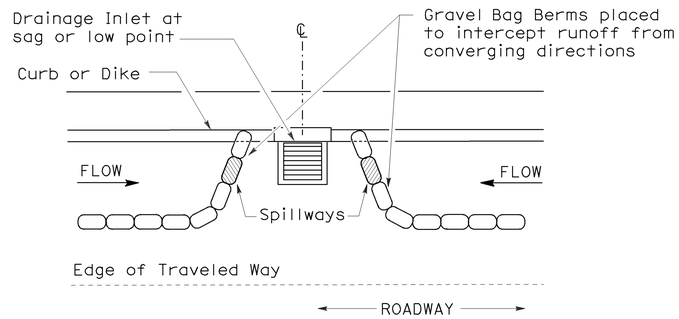

PLAN

CONFIGURATION FOR SAG POINT INLET (GRAVEL BAG BERM)

GRAVEL BAG BERM (TYPE 3A) SPACING TABLE

SLOPE OF ROADWAY (PERCENT)	1 to 3.9	4 to 5.9	6 to 7.9	8 to 10	10+
INTERVAL BETWEEN BERM	100′	75′	50′	25′	12′

For slope of less than 1%, install barriers only if erosion/sediment is prevalent

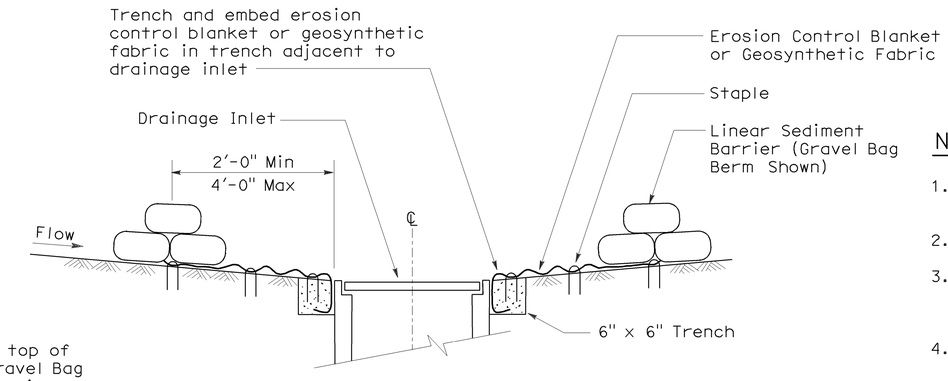

SECTION A-A

NOTES:

1. Place safety cones adjacent to drainage inlet protection.
2. Dimensions may vary to fit field conditions.
3. Install a minimum of 3 gravel bag berms upstream of each drainage inlet to be protected.
4. Position erosion control blanket or geosynthetic fabric at edge of concrete apron and secure in trench.
5. Erosion control blanket or geosynthetic fabric is not required if the area adjacent to the drainage inlet is vegetated or paved.

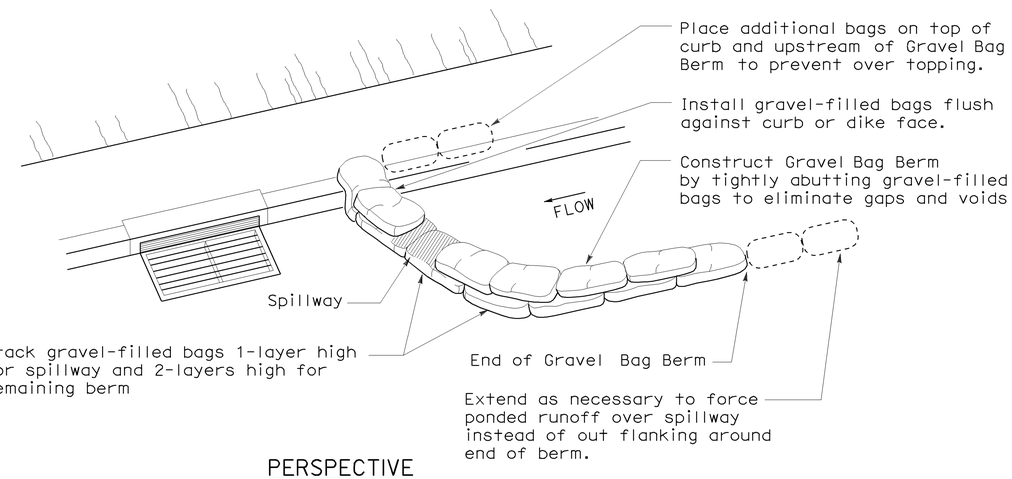

PERSPECTIVE

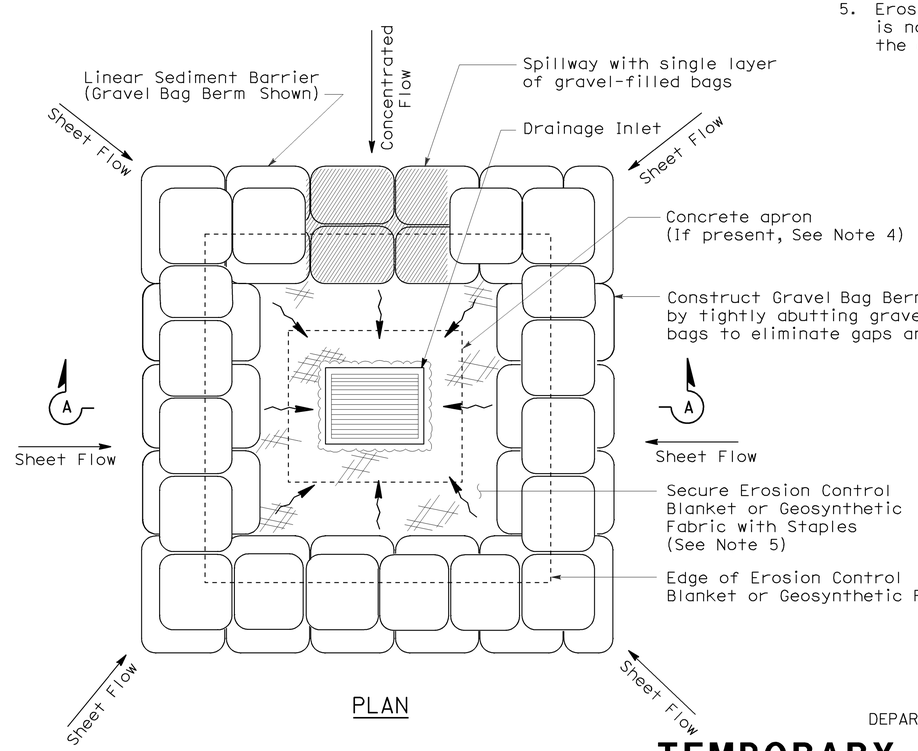

PLAN

TEMPORARY DRAINAGE INLET PROTECTION (TYPE 3B)

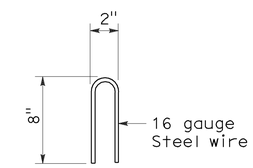

STAPLE DETAIL

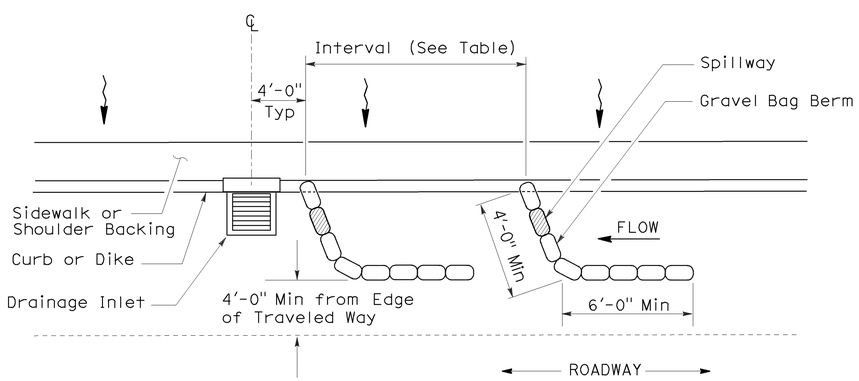

PLAN

TEMPORARY DRAINAGE INLET PROTECTION (TYPE 3A) (GRAVEL BAG BERM)

STATE OF CALIFORNIA
DEPARTMENT OF TRANSPORTATION

TEMPORARY WATER POLLUTION CONTROL DETAILS (TEMPORARY DRAINAGE INLET PROTECTION)

NO SCALE

NSP T62 DATED AUGUST 15, 2008 SUPPLEMENTS THE STANDARD PLANS BOOK DATED MAY 2006.

NEW STANDARD PLAN NSP T62

2006 NEW STANDARD PLAN NSP T62

7-11-08

DIST	COUNTY	ROUTE	POST MILES TOTAL PROJECT	SHEET NO.	TOTAL SHEETS
03	Pla	80	5.1/14.5	54	59

Robert B Schott
LICENSED LANDSCAPE ARCHITECT

August 15, 2008
PLANS APPROVAL DATE

LICENSED LANDSCAPE ARCHITECT Robert B. Schott 3835 Signature 11-04-08 Renewal Date 08-11-08 Date STATE OF CALIFORNIA

The State of California or its officers or agents shall not be responsible for the accuracy or completeness of electronic copies of this plan sheet.

To accompany plans dated 6-13-11

FLEXIBLE SEDIMENT BARRIER SPACING TABLE

SLOPE OF ROADWAY (PERCENT)	0 to 0.9	1 to 1.9	2 to 2.9	3 to 4	5+
INTERVAL BETWEEN BARRIERS	50′	35′	30′	25′	20′
ANGLE FROM FACE OF CURB	70°	70°	70°	45°	45°
SUGGESTED BARRIER LENGTH	6′	6′	6′	6′	6′

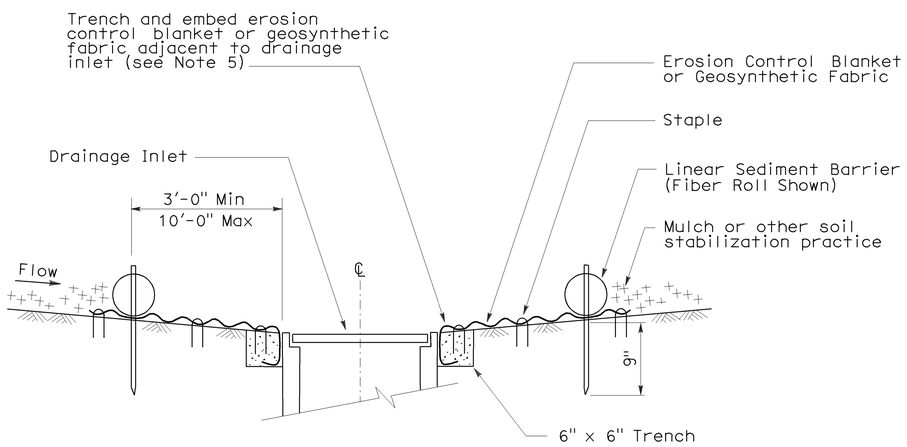

SECTION A-A

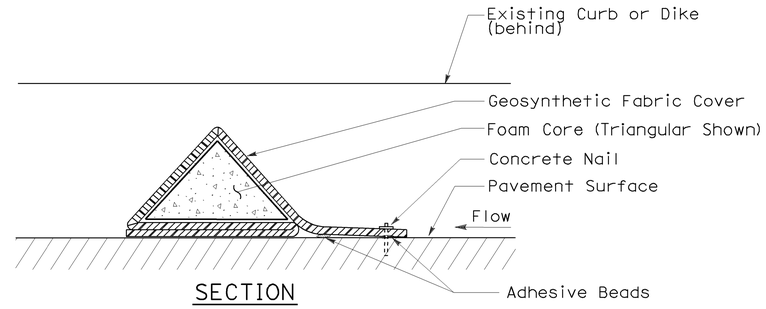

SECTION

FLEXIBLE SEDIMENT BARRIER DETAIL (FOAM BARRIER SHOWN)

NOTES:

1. See Standard Plan T51 for Temporary Silt Fence.
2. Dimensions may vary to fit field conditions.
3. Install a minimum of 3 flexible sediment barriers upstream of each drainage inlet to be protected.
4. Position erosion control blanket or geosynthetic fabric at edge of concrete apron and secure in trench.
5. Erosion control blanket or geosynthetic fabric is not required if the area adjacent to the drainage inlet is vegetated.

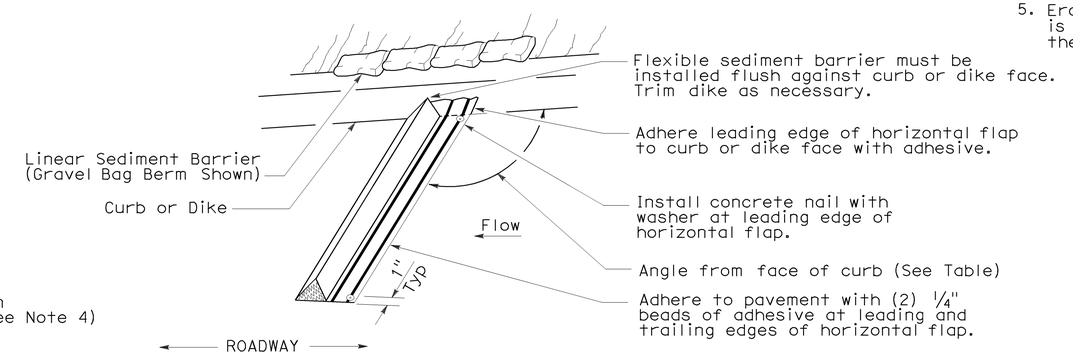

PERSPECTIVE

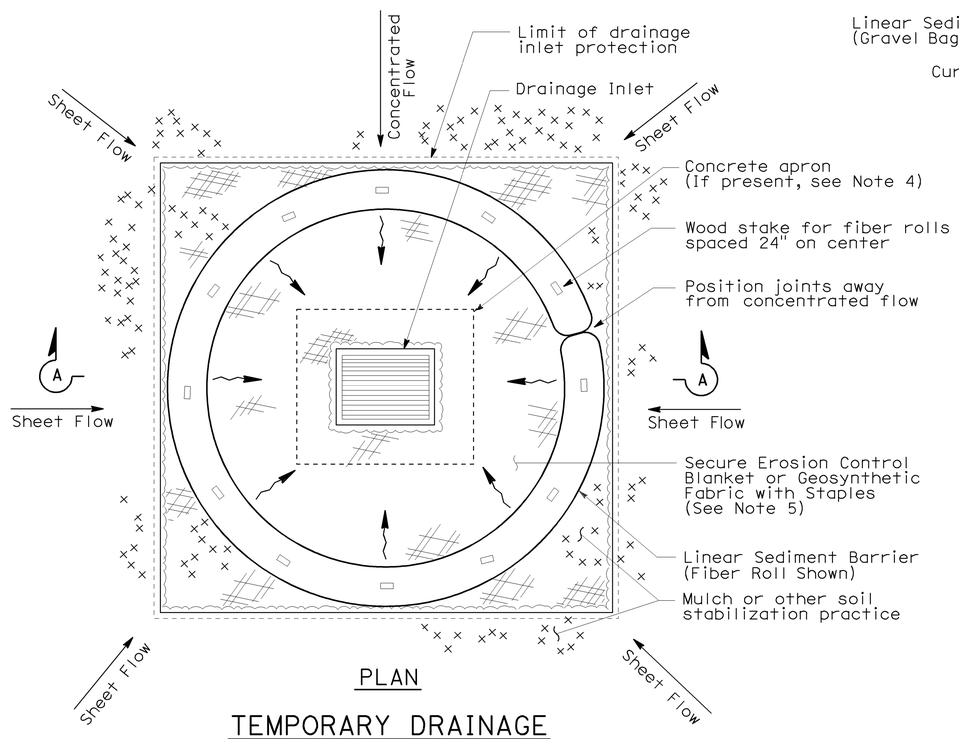

PLAN

TEMPORARY DRAINAGE INLET PROTECTION (TYPE 4A)

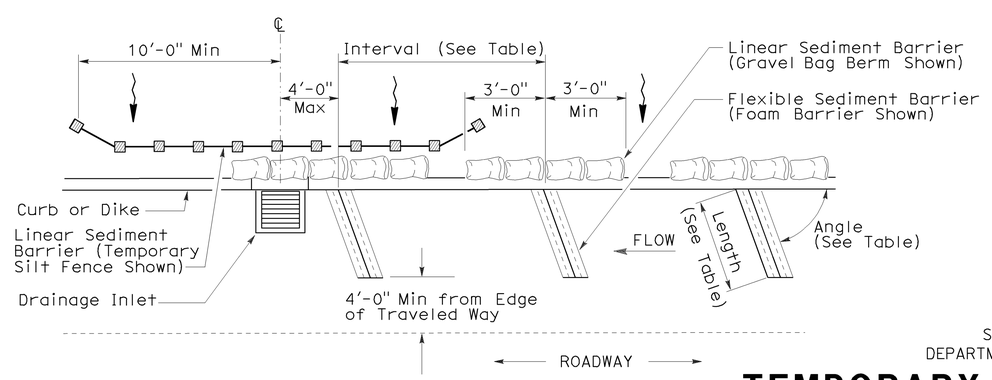

PLAN

TEMPORARY DRAINAGE INLET PROTECTION (TYPE 4B) FLEXIBLE SEDIMENT BARRIER

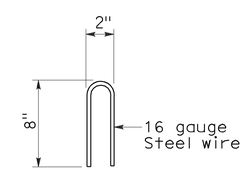

STAPLE DETAIL

STATE OF CALIFORNIA
DEPARTMENT OF TRANSPORTATION

TEMPORARY WATER POLLUTION CONTROL DETAILS (TEMPORARY DRAINAGE INLET PROTECTION)

NO SCALE

NSP T63 DATED AUGUST 15, 2008 SUPPLEMENTS THE STANDARD PLANS BOOK DATED MAY 2006.

NEW STANDARD PLAN NSP T63

2006 NEW STANDARD PLAN NSP T63

7-11-08

DIST	COUNTY	ROUTE	POST MILES TOTAL PROJECT	SHEET NO.	TOTAL SHEETS
03	Pla	80	5.1/14.5	55	59

LICENSED LANDSCAPE ARCHITECT

August 15, 2008
PLANS APPROVAL DATE

LICENSED LANDSCAPE ARCHITECT
ROBERT B. SCHOTT 3625
Signature
11-04-08
Renewal Date
08-11-08
Date
STATE OF CALIFORNIA

The State of California or its officers or agents shall not be responsible for the accuracy or completeness of electronic copies of this plan sheet.

To accompany plans dated 6-13-11

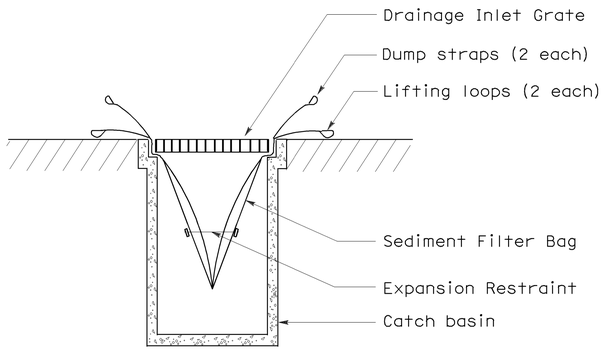

SECTION B-B

SEDIMENT FILTER BAG DETAIL

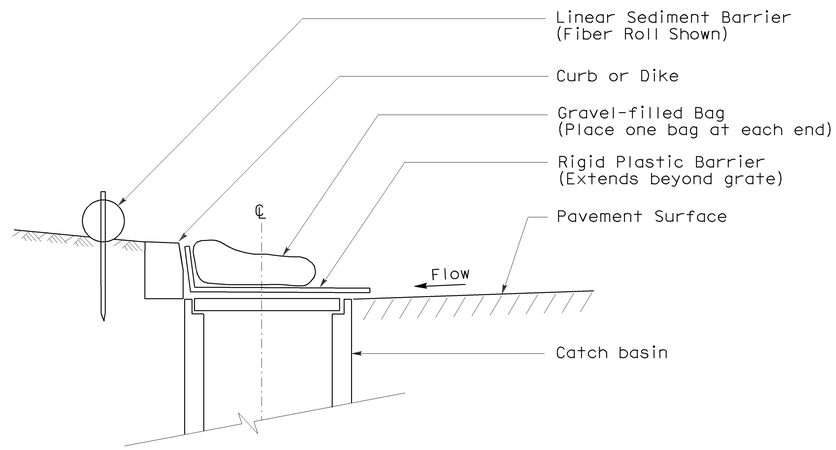

SECTION

TEMPORARY DRAINAGE INLET PROTECTION (TYPE 6A) (CATCH BASIN WITH GRATE)

NOTES:

1. See Standard Plan T51 for Temporary Silt Fence.
2. Dimensions may vary to fit field conditions.

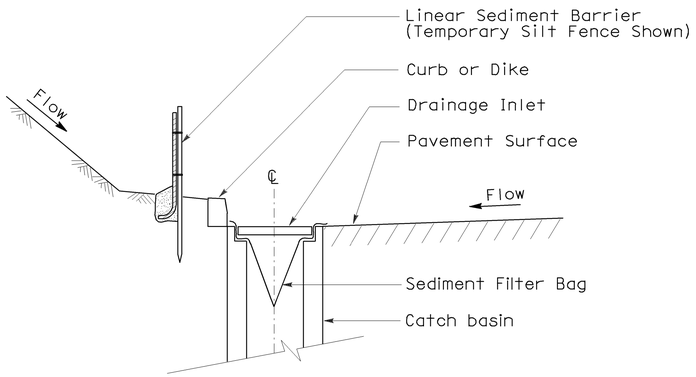

SECTION A-A

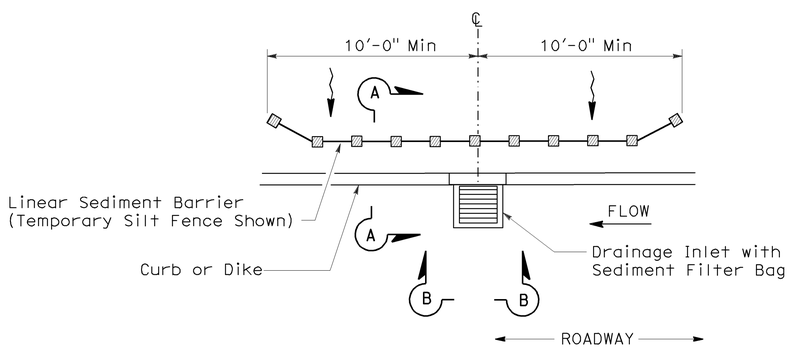

PLAN

TEMPORARY DRAINAGE INLET PROTECTION (TYPE 5) (SEDIMENT FILTER BAG)

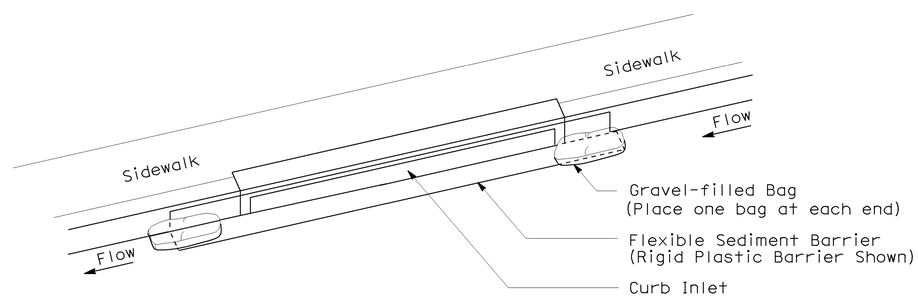

PERSPECTIVE

TEMPORARY DRAINAGE INLET PROTECTION (TYPE 6B) (CURB INLET WITHOUT GRATE)

STATE OF CALIFORNIA
DEPARTMENT OF TRANSPORTATION

TEMPORARY WATER POLLUTION CONTROL DETAILS (TEMPORARY DRAINAGE INLET PROTECTION)

NO SCALE

NSP T64 DATED AUGUST 15, 2008 SUPPLEMENTS
THE STANDARD PLANS BOOK DATED MAY 2006.

NEW STANDARD PLAN NSP T64

2006 NEW STANDARD PLAN NSP T64

7-11-08

DIST	COUNTY	ROUTE	POST MILES TOTAL PROJECT	SHEET NO.	TOTAL SHEETS
03	Pla	80	5.1/14.5	56	59

REGISTERED ELECTRICAL ENGINEER

October 5, 2007
PLANS APPROVAL DATE

REGISTERED PROFESSIONAL ENGINEER
Jeffery G. McRae
No. E14512
Exp. 6-30-08
ELECTRICAL
STATE OF CALIFORNIA

The State of California or its officers or agents shall not be responsible for the accuracy or completeness of electronic copies of this plan sheet.

To accompany plans dated 6-13-11

ELECTROLIERS

STANDARD TYPES
15, 15D
15 STRUCTURE
21, 21D STRUCTURE
30
31
32
35
36-20A

High mast light pole

Double Arm lighting standard

Existing electrolier

Electrolier foundation (Future installation)

NOTES:

1. Luminaires shall be 310 W HPS when installed on Type 21, 21D, 30, 31, 32, 35 and 36-20A Standards, unless otherwise specified. Luminaires shall be 200 W HPS when installed on other type standards or poles, unless otherwise specified.
2. Luminaires shall be the cutoff type, ANSI Type Ⅲ medium cutoff lighting distribution, unless otherwise specified.
3. Variations noted adjacent to symbol on project plans.

Electrolier (see project notes or project plans)

Luminaire on wood pole

STANDARD NOTES:

- AB Abandon. If applied to conduit, remove conductors.
- BC Install pull box in existing conduit run.
- BP Pedestrian barricade, type as indicated on plan.
- CB Install conduit into existing pull box.
- CC Connect new and existing conduit. Remove existing conductors and install conductors as indicated.
- CF Conduit to remain for future use. Remove conductors. Install pull wire or rope.
- DH Detector handhole.
- FA Foundation to be abandoned.
- IS Install sign on signal mast arm.
- NS No slip base on standard.
- PEC Photoelectric control.
- PEU Photoelectric unit.
- RC Equipment or material to be removed and become the property of the Contractor.
- RE Remove electrolier, fuses and ballast. Tape ends of conductors.
- RL Relocate equipment.
- RR Remove and reuse equipment.
- RS Remove and salvage equipment.
- SC Splice new to existing conductors.
- SD Service disconnect.
- SF Standard to remain for future use. Remove luminaire, pole conductors, fuses and ballast.
- TSP Telephone service point.

ABBREVIATIONS AND EQUIPMENT DESIGNATIONS

PROPOSED	EXISTING	
BBS	bbs	Battery backup system
BC	bc	Bolt circle
C	C	Conduit
CCTV	cctv	Closed circuit television
CKT	ckt	Circuit
CMS	cms	Changeable message sign
DLC	dlc	Loop detector lead-in cable
EMS	ems	Extinguishable message sign
EVC	evc	Emergency vehicle cable
EVD	evd	Emergency vehicle detector
FB	fb	Flashing beacon
FBCA	fbca	Flashing beacon control assembly
FBS	fbs	Flashing beacon with slip base
FO	fo	Fiber optic
G	G	Ground (Equipment Grounding Conductor)
GFCI	GFCI	Ground fault circuit interrupt
HAR	har	Highway advisory radio
HEX	hex	Hexagonal
HPS	hps	High pressure sodium
IISNS	iisns	Internally illuminated street name sign
ISL	isl	Induction sign lighting
LED	led	Light emitting diode
LMA	lma	Luminaire mast arm
LPS	lps	Low pressure sodium
LTG	ltg	Lighting
LUM	lum	Luminaire
MAT	mat	Mast arm mounting vehicle signal faces, top attachment
MAS	mas	Mast arm mounting vehicle signal faces, side attachment
MAS-4A	mas-4A	Mast arm mounting vehicle signal faces, side attachment - 4 signal section
MAS-4B	mas-4B	
MAS-4C	mas-4C	
MAS-5A	mas-5A	Mast arm mounting vehicle signal faces, side attachment - 5 signal section
MAS-5B	mas-5B	
MC	mc	Mercury contactor
M/M	m/m	Multiple to multiple transformer
MT	mt	Conduit with pull wire or rope only
MTG	mtg	Mounting
	mv	Mercury vapor lighting fixture
N	N	Neutral (Grounded Conductor)
NC	NC	Normally closed
NO	NO	Normally open
PB	pb	Pull box
PEC	pec	Photoelectric control (Type Ⅰ, Ⅱ, Ⅲ, Ⅳ or Ⅴ as shown)
PED	ped	Pedestrian
PEU	peu	Photoelectric unit
PPB	ppb	Pedestrian push button
RL		Relocated equipment
RM	rm	Ramp metering
SB	sb	Slip base
SIC	sic	Signal interconnect cable
SIG	sig	Signal
SMA	sma	Signal mast arm
SNS	sns	Street name sign
SP	sp	Service point
TDC	tdc	Telephone demarcation cabinet
TMS	tms	Traffic monitoring station
TOS	tos	Traffic Operations System
VEH	veh	Vehicle
XFMR	xfmr	Transformer
COMM	comm	Communication
RWIS	rwis	Roadway weather information system

SOFFIT AND WALL MOUNTED LUMINAIRES

Pendant, 70 W HPS unless otherwise specified.

Flush, 70 W HPS unless otherwise specified.

Wall surface, 70 W HPS unless otherwise specified.

Existing soffit or wall luminaire to remain unmodified.

Existing soffit or wall luminaire to be modified as specified.

NOTE:

Arrow indicates "street side" of luminaire.

STATE OF CALIFORNIA
DEPARTMENT OF TRANSPORTATION

ELECTRICAL SYSTEMS (SYMBOLS AND ABBREVIATIONS)

NO SCALE

RSP ES-1A DATED OCTOBER 5, 2007 SUPERSEDES STANDARD PLAN ES-1A
DATED MAY 1, 2006 - PAGE 400 OF THE STANDARD PLANS BOOK DATED MAY 2006.

REVISED STANDARD PLAN RSP ES-1A

2006 REVISED STANDARD PLAN RSP ES-1A

DIST	COUNTY	ROUTE	POST MILES TOTAL PROJECT	SHEET NO.	TOTAL SHEETS
03	Pla	80	5.1/14.5	57	59

REGISTERED ELECTRICAL ENGINEER

October 5, 2007
PLANS APPROVAL DATE

REGISTERED PROFESSIONAL ENGINEER Jeffery G. McRae No. E14512 Exp. 6-30-08 ELECTRICAL STATE OF CALIFORNIA

The State of California or its officers or agents shall not be responsible for the accuracy or completeness of electronic copies of this plan sheet.

To accompany plans dated 6-13-11

CONDUIT

PROPOSED	EXISTING	
		Lighting Conduit, unless otherwise indicated or noted
		Traffic signal conduit
C	c	Communication conduit
T	t	Telephone conduit
F	f	Fire alarm conduit
FO	fo	Fiber optic conduit
		Conduit termination (RSP ES-9A C)
R	r	Conduit riser in/on structure or service pole

SERVICE EQUIPMENT

PROPOSED	EXISTING	
OH	oh	Overhead lines
U	U	Wood pole "U" indicates utility owned
		Pole guy with anchor
		Utility transformer - ground mounted
III		Service equipment enclosure type
		Service equipment enclosure door indicates front of enclosure
T	t	Telephone demarcation cabinet

POLE-MOUNTED SERVICE DESIGNATION

Type of installation

TYPE H SERVICE - 28'-10" ← Pole height above grade

ILLUMINATED OVERHEAD SIGN

PROPOSED	EXISTING	
		Overhead sign - Single post
		Overhead sign - Two post
		Overhead sign - Mounted on structure
		Overhead sign with electrolier

SIGNAL EQUIPMENT

PROPOSED	EXISTING	
		Pedestrian signal face
		Pedestrian push button post
		Pedestrian barricade
		Vehicle signal face (with backplate, 3-Section: red, yellow and green)
		Vehicle signal face with angle visors
PV	PV	Modifications of basic symbols: "L" indicates all non-arrow sections louvered "LG" indicates louvered green section only "PV" indicates 12" programmed visibility sections "8" indicates all 8" sections (only when specified)
		Type 15TS and Vehicle signal face
		Vehicle signal face with red, yellow and green left arrow sections
		Vehicle signal face with red and yellow sections and up green arrow
		Vehicle signal face (5 Section) with red, yellow and green sections and yellow and green right arrows
		Type 1 Standard and attached vehicle signal faces
		Standard with signal mast arm only and attached vehicle signal faces and internally illuminated street name sign
		Type 33 Standard, Left-turn vehicle signal face and sign
		Standard with luminaire and signal mast arms and attached vehicle signal faces
		Cantilever flashing beacon Type 9 Frame, with a sign unless otherwise specified or indicated
		Type 15-FBS Standard with two vehicle signal face sections with lens, backplate and visor with a sign
R	Y	Flashing beacon. One vehicle signal face section with lens, backplate and visor. "R" indicates red indication, "Y" indicates yellow indication
		Controller assembly. Door indicates front of cabinet

SIGNAL EQUIPMENT Cont

PROPOSED	EXISTING	
		Guard post
		Type 1 Standard with "Meter On" sign
		Emergency Vehicle detector

NOTES:

1. All signal sections shall be 12" unless shown otherwise.
2. Signal heads shall be provided with backplates unless shown otherwise.
3. Signal indication shall be LED.

STATE OF CALIFORNIA
DEPARTMENT OF TRANSPORTATION

ELECTRICAL SYSTEMS (SYMBOLS AND ABBREVIATIONS)

NO SCALE

RSP ES-1B DATED OCTOBER 5, 2007 SUPERCEDES STANDARD PLAN ES-1B DATED MAY 1, 2006 - PAGE 401 OF THE STANDARD PLANS BOOK DATED MAY 2006.

REVISED STANDARD PLAN RSP ES-1B

2006 REVISED STANDARD PLAN RSP ES-1B

7-10-07

DIST	COUNTY	ROUTE	POST MILES TOTAL PROJECT	SHEET NO.	TOTAL SHEETS
03	Pla	80	5.1/14.5	58	59

REGISTERED ELECTRICAL ENGINEER

October 5, 2007
PLANS APPROVAL DATE

REGISTERED PROFESSIONAL ENGINEER
Jeffery G. McRae
No. E14512
Exp. 6-30-08
ELECTRICAL
STATE OF CALIFORNIA

The State of California or its officers or agents shall not be responsible for the accuracy or completeness of electronic copies of this plan sheet.

To accompany plans dated 6-13-11

EQUIPMENT IDENTIFICATION

ILLUMINATED SIGN IDENTIFICATION NUMBER:

Sign No. 12345 — Sign number - Place on post or structure

10 ISL SCI 1.0

- 1.0 — Transformer rating (kVA)
- SCI — Lighting control type
- ISL — Number and type of fixtures

Do NOT place on standard or structure

ELECTROLIER OR EQUIPMENT IDENTIFICATION NUMBER:

12345 - 15'-0"

- 15'-0" — Mast arm length, if shown. Do not place on standard or structure.
- 12345 — Equipment number - Place on standard or structure. Existing equipment numbers are shown in parenthesis

CONDUIT AND CONDUCTOR IDENTIFICATION:

1½"C, 2#10, 15#14, 2 DLC

- 2#10, 15#14, 2 DLC — Number and size of conductors and cables
- 1½"C — Size of conduit in inches

Ø1, Ø2, Ø2P, etc.	Traffic phase identification for signal faces, detectors and phase diagrams
1 2 3	Project note numbers
A B C	Equipment description, installation or item numbers
1 2 3	Conduit run numbers

SIGNAL AND LIGHTING STANDARD (TYPICAL DESIGNATION):

19A - 3 - 100

- 100 — Wind velocity = 100 mph
- 3 — Case 3 arm loading
- 19A — Standard type
- Standard Plan sheet number
- Detail number or letter

MISCELLANEOUS EQUIPMENT

PROPOSED	EXISTING	
CMS	cms	Changeable message sign
		Closed circuit television camera
		Highway advisory radio pole and antenna
EMS	ems	Extinguishable message sign
M V	m v	Detection device M = Microwave sensor V = Video image sensor

WIRING DIAGRAM LEGEND

P	Pole
CB	Circuit breaker
A	Ampere
V	Volt
M	Metered
UM	Unmetered
NB	Neutral bus
GB	Ground bus
G	Equipment grounding conductor
N	Grounded conductor (Neutral)

- External conductor
- Conductor or bus
- Tie point
- Contactor coil
- Contactor, Contact NO
- Terminal blocks
- Contactor, Contact NC
- Enclosure bond
- Grounding electrode
- Circuit breaker
- Receptacle

PULL BOXES

PROPOSED	EXISTING	
		Pull box-No. 5 unless otherwise indicated or noted.
3	9A(21)	Pull box-Additional designations or descriptions

3 = No. 3½ pull box
5 = No. 5 pull box
6 = No. 6 pull box
7 = No. 7 (Ceiling pull box)
8 = No. 8 (Pendant soffit pull box)
9 = No. 9 pull box
9A = No. 9A pull box

(C) = Communications pull box
(E) = Pull box with extension
(S) = Sprinkler control pull box
(21) = Anchor bolts and conduit for future installation of Type 21 Standard
(T) = Traffic pull box

VEHICLE DETECTORS

5 J 9 U

- U — U = Upper, L = Lower
- 9 — Slot number in input file
- J — Input file (I or J)
- 5 — Phase

PROPOSED	EXISTING	
		Type A detector loop. Outline of sawcut shown.
		Type B detector loop. Outline of sawcut shown.
		Type C detector loop. Outline of sawcut shown.
		Type D detector loop. Outline of sawcut shown.
		Type E detector loop. Outline of sawcut shown.
		Type Q detector loop. Outline of sawcut shown.
		Magnetic detector
DH	dh	Detector handhole
		Microwave or video detection zone

STATE OF CALIFORNIA
DEPARTMENT OF TRANSPORTATION

ELECTRICAL SYSTEMS (SYMBOLS AND ABBREVIATIONS)

NO SCALE

RSP ES-1C DATED OCTOBER 5, 2007 SUPERCEDES STANDARD PLAN ES-1C DATED MAY 1, 2006 - PAGE 402 OF THE STANDARD PLANS BOOK DATED MAY 2006.

REVISED STANDARD PLAN RSP ES-1C

2006 REVISED STANDARD PLAN RSP ES-1C

7-10-07

DIST	COUNTY	ROUTE	POST MILES TOTAL PROJECT	SHEET NO.	TOTAL SHEETS
03	Pla	80	5.1/14.5	59	59

REGISTERED ELECTRICAL ENGINEER

October 5, 2007
PLANS APPROVAL DATE

REGISTERED PROFESSIONAL ENGINEER Jeffery G. McRae No. E14512 Exp. 6-30-08 ELECTRICAL STATE OF CALIFORNIA

The State of California or its officers or agents shall not be responsible for the accuracy or completeness of electronic copies of this plan sheet.

To accompany plans dated 6-13-11

LOOP INSTALLATION PROCEDURE

1. Loops shall be centered in lanes.
2. Saw slots in pavement for loop conductors as shown in details.
3. Distance between side of loop and a lead-in saw cut from adjacent detectors shall be 2'-0" minimum. Distance between lead-in saw cuts shall be 6" minimum.
4. Bottom of saw slot shall be smooth with no sharp edges.
5. Slots shall be washed until clean, blown out and thoroughly dried before installing loop conductors.
6. Adjacent loops on the same sensor unit channel shall be wound in opposite directions.
7. Identify and tag loop circuit pairs in the pull box with loop number, start (S) and finish (F) of conductor. Identify and tag lead-in-cable with sensor number and phase.
8. Install loop conductor in slot using a 3/16" to 1/4" thick wood paddle. Hold loop conductors with wood paddles (at the bottom of the sawed slot) during sealant placement.
9. No more than 2 twisted pairs shall be installed in one sawed slot.
10. Allow additional 5'-0" of slack length of conductor for the lead-in run to pull box.
11. The additional length of each conductor for each loop shall be twisted together into a pair (6 turns per 3'-4" minimum) before being placed in the slot and conduit leading to pull box.
12. Test each loop circuit for continuity, circuit resistance and insulation resistance at the pull box before filling slots.
13. Fill slots as shown in details.
14. Splice loop conductors to lead-in-cable. Splices shall be soldered.
15. End of lead-in-cable and Type 2 loop conductor shall be waterproofed prior to installing in conduit to prevent moisture from entering the cable.
16. Lead-in-cable shall not be spliced between the pull box and the controller cabinet terminals.
17. Test each loop circuit for continuity, circuit resistance and insulation resistance at the controller cabinet location.
18. Where loop conductors are not to be spliced to a lead-in-cable, the ends of the conductors shall be taped and waterproofed with electrical insulating coating.

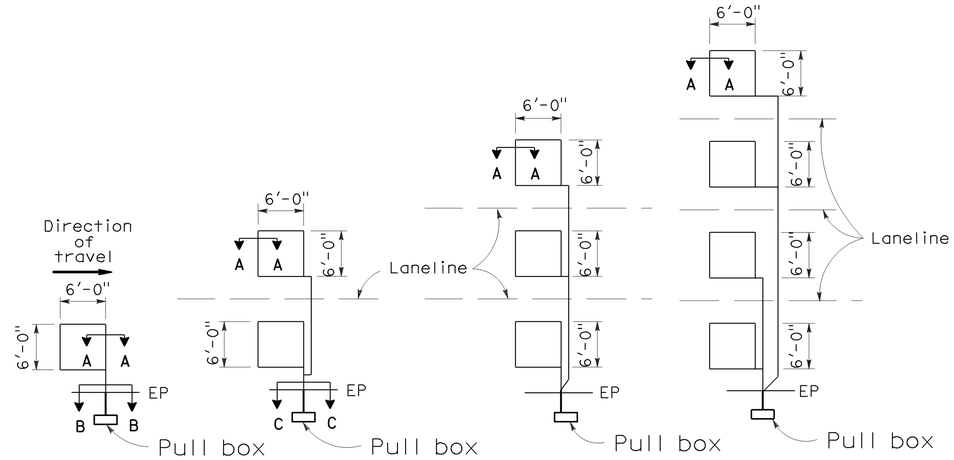

TYPE 1A INSTALLATION | TYPE 2A INSTALLATION | TYPE 3A INSTALLATION | TYPE 4A INSTALLATION

SAWCUT DETAILS

(Type A loop detector configurations illustrated)

1. 1A thru 4A = 1 Type A loop configuration in each lane.
2. 1B thru 4B = 1 Type B loop configuration in each lane.
3. 1C = 1 Type C loop configuration entering lanes as required.
4. 1D thru 4D = 1 Type D loop configuration in each lane.
5. 1E thru 4E = 1 Type E loop configuration in each lane.
6. 1Q thru 4Q = 1 Type Q loop configuration in each lane. (Use Type A, B, C, D, E or Q loop detector configurations only when specified or shown on plans)

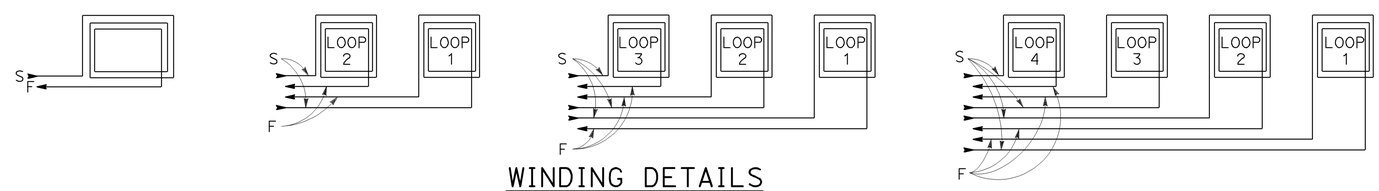

WINDING DETAILS

See Notes 6 and 7

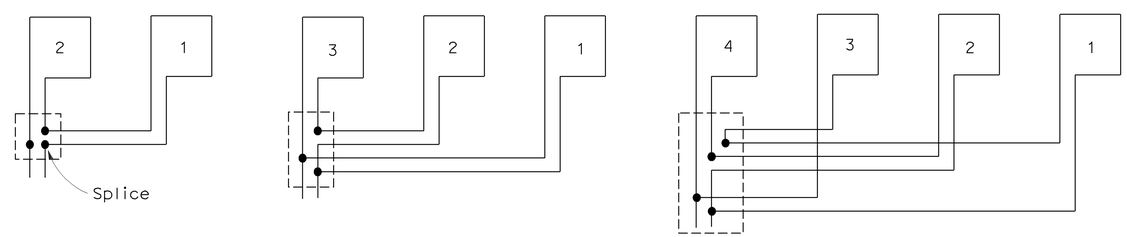

TYPICAL LOOP CONNECTIONS

(Dashed lines represent the pull box)

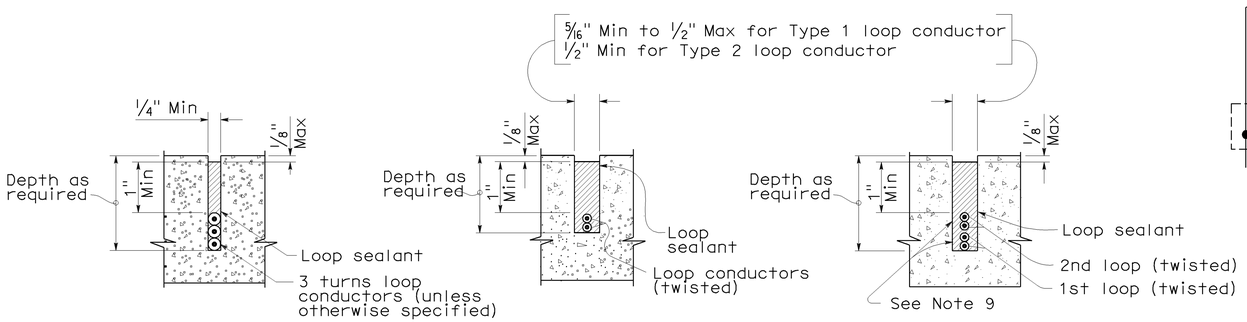

SECTION A-A | SECTION B-B | SECTION C-C

SLOT DETAILS - TYPE 1 AND TYPE 2 LOOP CONDUCTOR

STATE OF CALIFORNIA
DEPARTMENT OF TRANSPORTATION

ELECTRICAL SYSTEMS (DETECTORS)

NO SCALE

RSP ES-5A DATED OCTOBER 5, 2007 SUPERCEDES STANDARD PLAN ES-5A DATED MAY 1, 2006 - PAGE 423 OF THE STANDARD PLANS BOOK DATED MAY 2006.

REVISED STANDARD PLAN RSP ES-5A

2006 REVISED STANDARD PLAN RSP ES-5A

8-17-07