Dist	COUNTY	ROUTE	POST MILES TOTAL PROJECT	SHEET No.	TOTAL SHEETS
02	Sis	161	2.7/4.5	1	23

STATE OF CALIFORNIA

DEPARTMENT OF TRANSPORTATION

PROJECT PLANS FOR CONSTRUCTION ON

STATE HIGHWAY

IN SISKIYOU COUNTY ABOUT 5 MILES EAST OF DORRIS FROM 2.7 MILES EAST TO 4.5 MILES EAST OF ROUTE 97

TO BE SUPPLEMENTED BY STANDARD PLANS DATED 2010

INDEX OF SHEETS

SHEET No.	DESCRIPTION
1	TITLE SHEET AND LOCATION MAP
2	TYPICAL CROSS SECTIONS
3-9	LAYOUTS
10	CONSTRUCTION DETAILS
11	CONSTRUCTION AREA SIGNS
12-15	PAVEMENT DELINEATION PLANS AND DETAILS
16	SUMMARY OF QUANTITIES
17-23	REVISED STANDARD PLANS

THE STANDARD PLANS LIST APPLICABLE TO THIS CONTRACT IS INCLUDED IN THE NOTICE TO BIDDERS AND SPECIAL PROVISIONS BOOK.

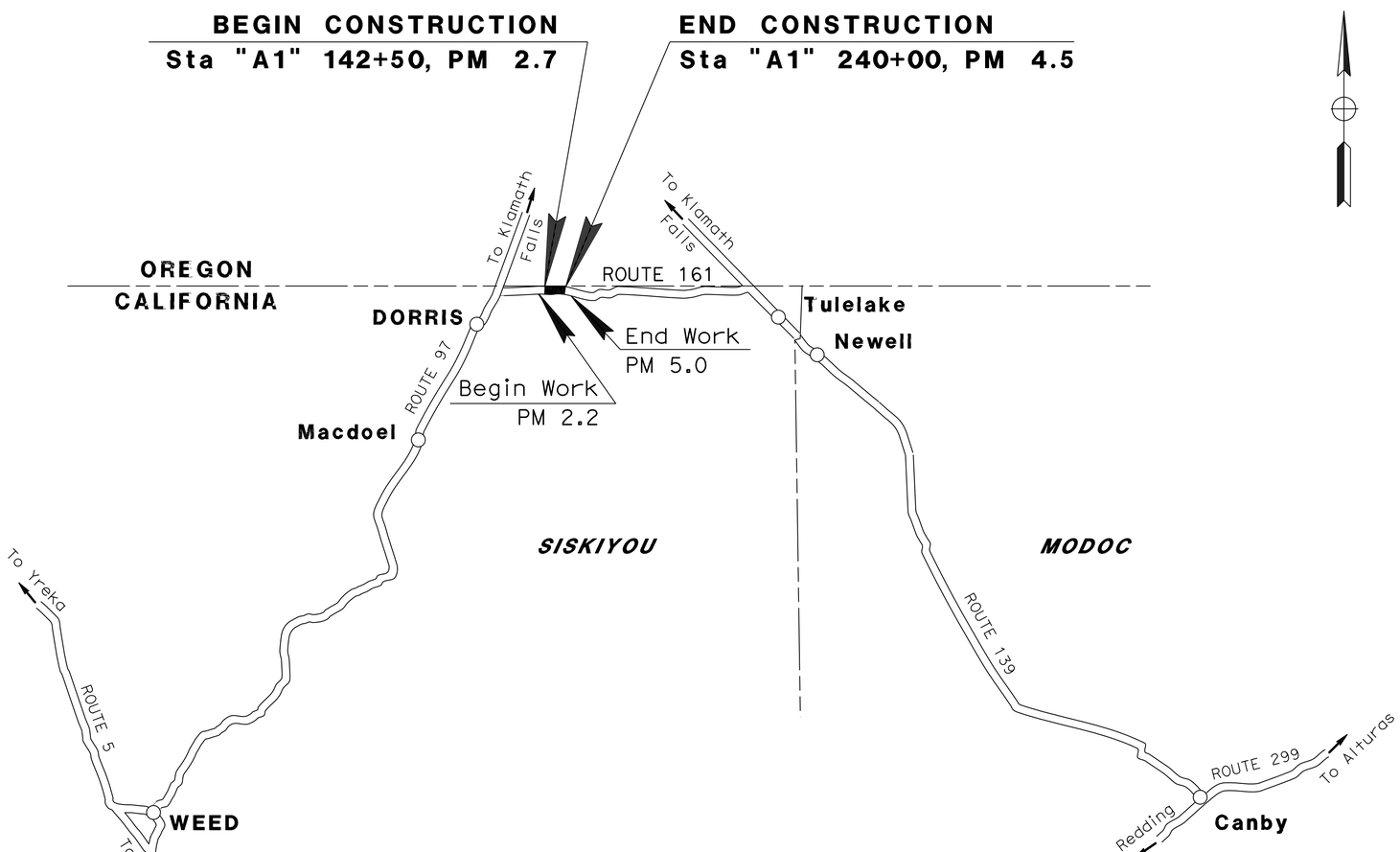

THE CONTRACTOR SHALL POSSESS THE CLASS (OR CLASSES) OF LICENSE AS SPECIFIED IN THE "NOTICE TO BIDDERS."

NO SCALE

Russell Flood 08-26-15
PROJECT ENGINEER DATE
REGISTERED CIVIL ENGINEER

August 31, 2015
PLANS APPROVAL DATE

REGISTERED PROFESSIONAL ENGINEER RUSSELL P. FLOOD No. C72261 Exp. 6-30-16 CIVIL STATE OF CALIFORNIA

THE STATE OF CALIFORNIA OR ITS OFFICERS OR AGENTS SHALL NOT BE RESPONSIBLE FOR THE ACCURACY OR COMPLETENESS OF SCANNED COPIES OF THIS PLAN SHEET.

CONTRACT No.	02-4E8004
PROJECT ID	0212000061

LAST REVISION 08-26-15

DATE PLOTTED => 03-SEP-2015
TIME PLOTTED => 08:57

PROJECT MANAGER DEREK WILLIS
DESIGN ENGINEER STEVE TOPAL

P:\proj1\02\4E800_plans\pse\24e800ab001.dgn

Dist	COUNTY	ROUTE	POST MILES TOTAL PROJECT	SHEET No.	TOTAL SHEETS
02	Sis	161	2.7/4.5	2	23

Russell Flood 08-26-15
REGISTERED CIVIL ENGINEER DATE

08-31-15
PLANS APPROVAL DATE

REGISTERED PROFESSIONAL ENGINEER RUSSELL P. FLOOD No. C72261 Exp. 6-30-16 CIVIL STATE OF CALIFORNIA

THE STATE OF CALIFORNIA OR ITS OFFICERS OR AGENTS SHALL NOT BE RESPONSIBLE FOR THE ACCURACY OR COMPLETENESS OF SCANNED COPIES OF THIS PLAN SHEET.

NOTES:

1. DIMENSIONS OF THE PAVEMENT STRUCTURES (STRUCTURAL SECTIONS) ARE SUBJECT TO TOLERANCES SPECIFIED IN THE STANDARD SPECIFICATIONS.
2. SUPERELEVATION AS SHOWN ON LAYOUTS OR AS DIRECTED BY THE ENGINEER.

LEGEND:

COLD PLANE AC PAVEMENT

ABBREVIATIONS:

FDRC FULL-DEPTH RECLAMATION-CEMENT

DESIGN DESIGNATION

ADT (2014)	574	D	50%
ADT (2034)	594	T	35%
DHV	83	V	65 MPH
ESAL	2,039,200	TI(20)	10

PAVEMENT CLIMATE REGION

HIGH DESERT

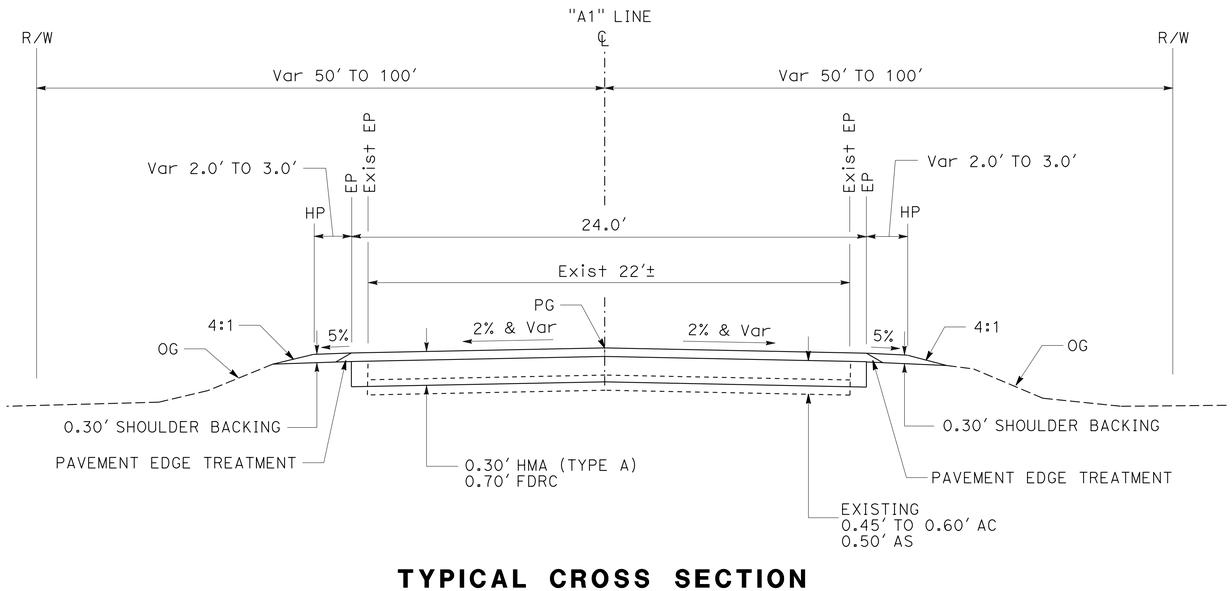

TYPICAL CROSS SECTION

"A1" 145+00 TO 237+50

SUPPLEMENTARY AGGREGATE

STATION RANGE "A1" LINE	SUPPLEMENTARY AGGREGATE (FULL-DEPTH RECLAMATION-CEMENT)	
	AVERAGE DEPTH FT	TON *
145+00 TO 191+00	0.04	330
191+00 TO 237+50	0.12	975

* SEE SHEET Q-1 FOR TOTALS

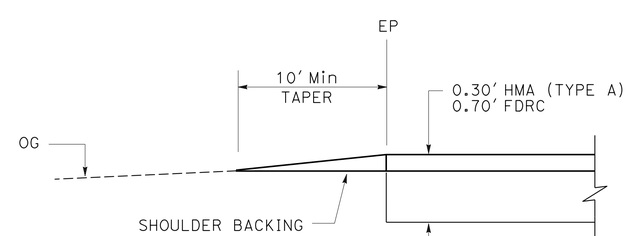

CONFORM TAPER AT UNPAVED DRIVEWAYS

"A1" 180+36 R+
"A1" 183+38 L+

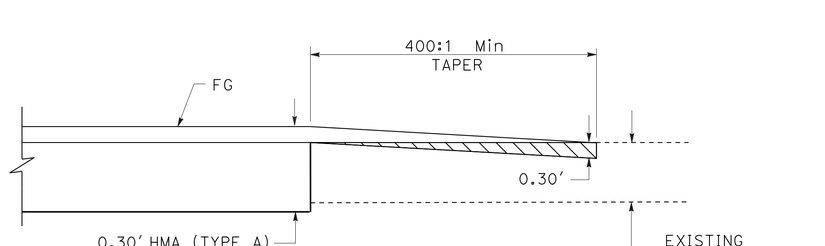

MAINLINE CONFORM TAPER

"A1" 143+80 TO 145+00
"A1" 237+50 TO 238+10

TYPICAL CROSS SECTIONS

NO SCALE

X-1

REVISED BY | DATE REVISED
GINNY SEIBERT | RUSSELL FLOOD
CALCULATED-DESIGNED BY | CHECKED BY
FUNCTIONAL SUPERVISOR
STEVE TOPAL

STATE OF CALIFORNIA - DEPARTMENT OF TRANSPORTATION
Caltrans®
DESIGN

P:\proj\02\4E800_plans\pse\24e800ca001.dgn

LAST REVISION 07-06-15 | DATE PLOTTED => 03-SEP-2015 | TIME PLOTTED => 08:57

Dist	COUNTY	ROUTE	POST MILES TOTAL PROJECT	SHEET No.	TOTAL SHEETS
02	Sis	161	2.7/4.5	3	23

Russell Flood 08-26-15
REGISTERED CIVIL ENGINEER DATE

08-31-15
PLANS APPROVAL DATE

REGISTERED PROFESSIONAL ENGINEER RUSSELL P. FLOOD No. C72261 Exp. 6-30-16 CIVIL STATE OF CALIFORNIA

THE STATE OF CALIFORNIA OR ITS OFFICERS OR AGENTS SHALL NOT BE RESPONSIBLE FOR THE ACCURACY OR COMPLETENESS OF SCANNED COPIES OF THIS PLAN SHEET.

NOTE:

1. FOR ACCURATE RIGHT OF WAY DATA, CONTACT RIGHT OF WAY ENGINEERING AT THE DISTRICT OFFICE.

LEGEND:

CONFORM (SEE SHEET X-1)

ABBREVIATIONS:

FDRC FULL-DEPTH RECLAMATION-CEMENT

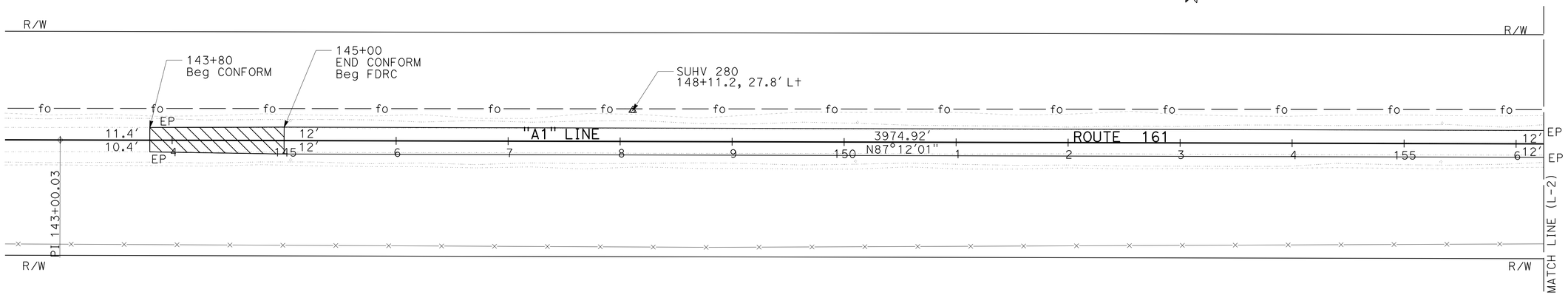

PLAN
SCALE: 1" = 50'

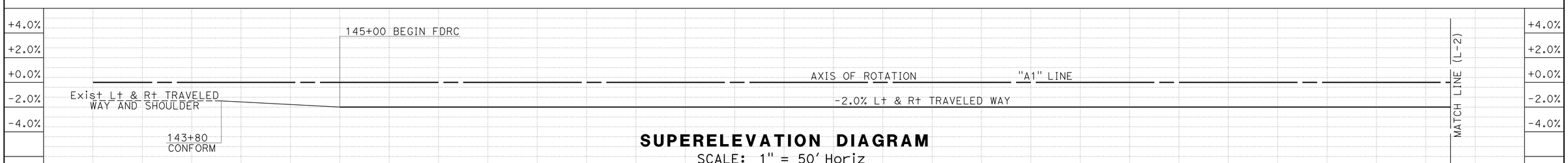

SUPERELEVATION DIAGRAM
SCALE: 1" = 50' Horiz

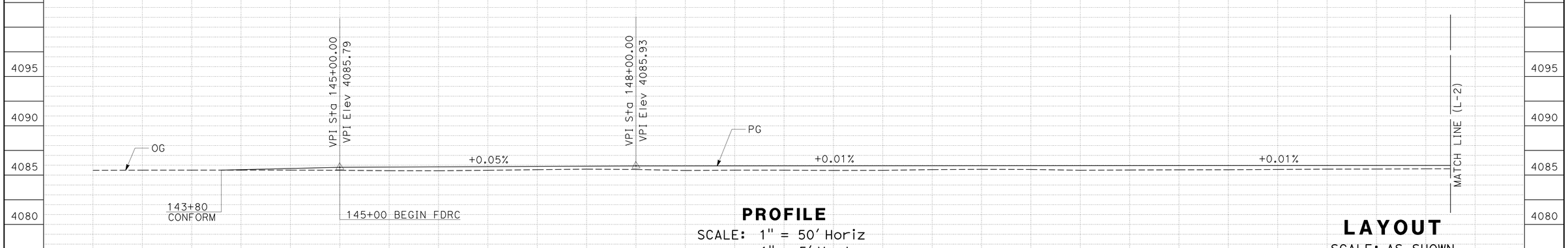

PROFILE
SCALE: 1" = 50' Horiz
1" = 5' Vert

LAYOUT
SCALE: AS SHOWN

L-1

STATION	3	4	145+00	6	7	8	9	150+00	1	2	3	4	155+00	6	TOTAL
CY Exc															
CY Emb															

REVISED BY | DATE REVISED
GINNY SEIBERT | RUSSELL FLOOD
CALCULATED-DESIGNED BY | CHECKED BY
FUNCTIONAL SUPERVISOR: STEVE TOPAL

STATE OF CALIFORNIA - DEPARTMENT OF TRANSPORTATION
Caltrans DESIGN

P:\proj1\02\4E800_plans\pse\24e800ea001.dgn

LAST REVISION 07-15-15 | DATE PLOTTED => 03-SEP-2015 | TIME PLOTTED => 08:57

Dist	COUNTY	ROUTE	POST MILES TOTAL PROJECT	SHEET No.	TOTAL SHEETS
02	Sis	161	2.7/4.5	4	23

Russell Flood 08-26-15
REGISTERED CIVIL ENGINEER DATE

08-31-15
PLANS APPROVAL DATE

REGISTERED PROFESSIONAL ENGINEER RUSSELL P. FLOOD No. C72261 Exp. 6-30-16 CIVIL STATE OF CALIFORNIA

THE STATE OF CALIFORNIA OR ITS OFFICERS OR AGENTS SHALL NOT BE RESPONSIBLE FOR THE ACCURACY OR COMPLETENESS OF SCANNED COPIES OF THIS PLAN SHEET.

NOTE:

1. FOR ACCURATE RIGHT OF WAY DATA, CONTACT RIGHT OF WAY ENGINEERING AT THE DISTRICT OFFICE.

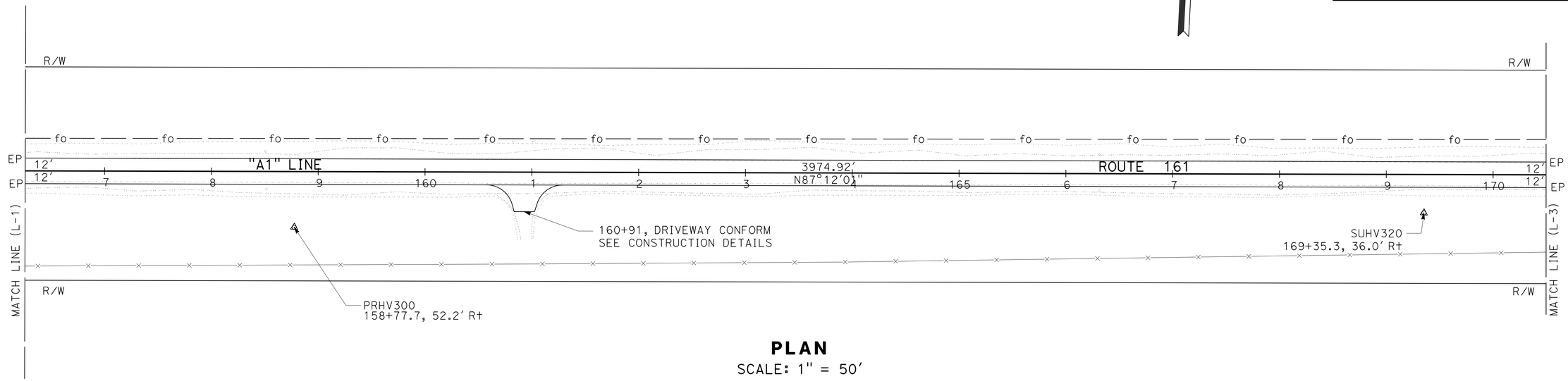

PLAN
SCALE: 1" = 50'

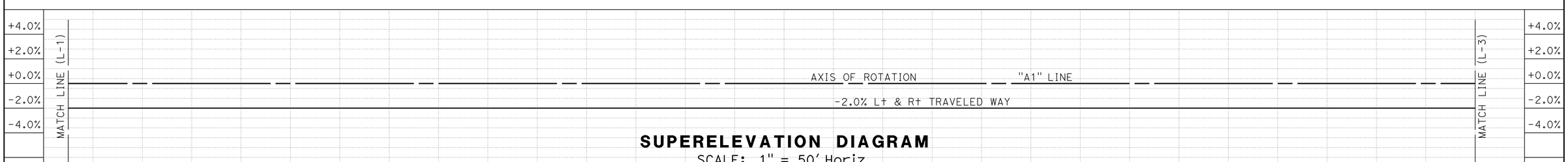

SUPERELEVATION DIAGRAM
SCALE: 1" = 50' Horiz

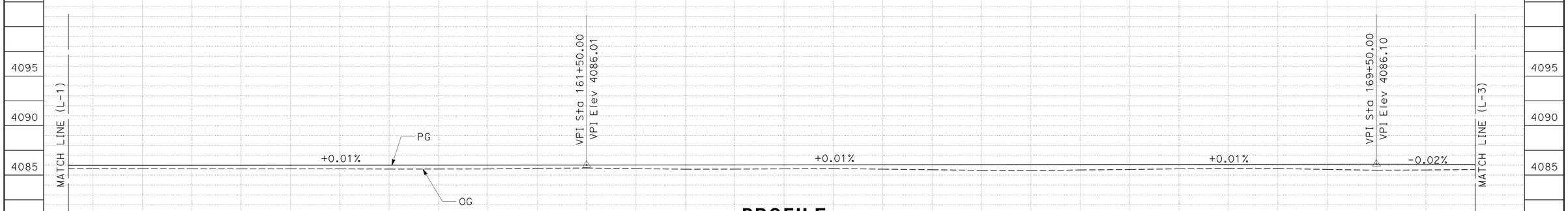

PROFILE
SCALE: 1" = 50' Horiz
1" = 5' Vert

LAYOUT
SCALE: AS SHOWN

L-2

STATION		7	8	9	160+00	1	2	3	4	165+00	6	7	8	9	170+00	TOTAL
CY	Exc															
	Emb															

REVISED BY | DATE REVISED
GINNY SEIBERT | RUSSELL FLOOD
CALCULATED-DESIGNED BY | CHECKED BY
FUNCTIONAL SUPERVISOR: STEVE TOPAL

STATE OF CALIFORNIA - DEPARTMENT OF TRANSPORTATION
Caltrans DESIGN

P:\proj1\02\4E800_plans\pse\24e800ea002.dgn

LAST REVISION 07-15-15 | DATE PLOTTED => 03-SEP-2015 | TIME PLOTTED => 08:57

Dist	COUNTY	ROUTE	POST MILES TOTAL PROJECT	SHEET No.	TOTAL SHEETS
02	Sis	161	2.7/4.5	5	23

Russell Flood 08-26-15
REGISTERED CIVIL ENGINEER DATE

08-31-15
PLANS APPROVAL DATE

REGISTERED PROFESSIONAL ENGINEER RUSSELL P. FLOOD No. C72261 Exp. 6-30-16 CIVIL STATE OF CALIFORNIA

THE STATE OF CALIFORNIA OR ITS OFFICERS OR AGENTS SHALL NOT BE RESPONSIBLE FOR THE ACCURACY OR COMPLETENESS OF SCANNED COPIES OF THIS PLAN SHEET.

NOTE:

1. FOR ACCURATE RIGHT OF WAY DATA, CONTACT RIGHT OF WAY ENGINEERING AT THE DISTRICT OFFICE.

CURVE DATA

No. ⓗ	R	Δ	T	L
1	4750′	11°39′45"	485.11′	966.86′

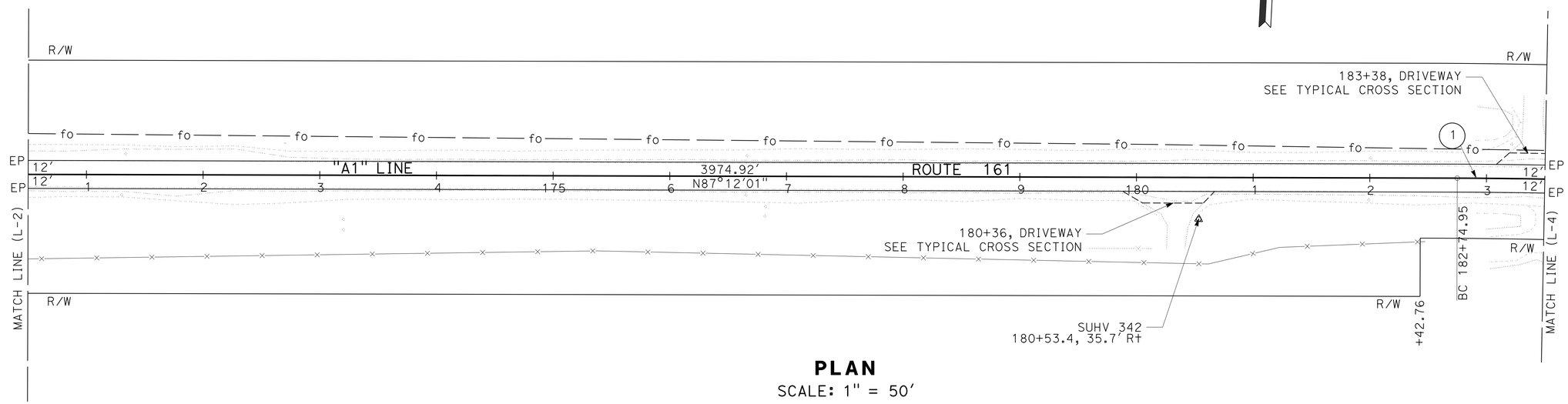

PLAN
SCALE: 1" = 50′

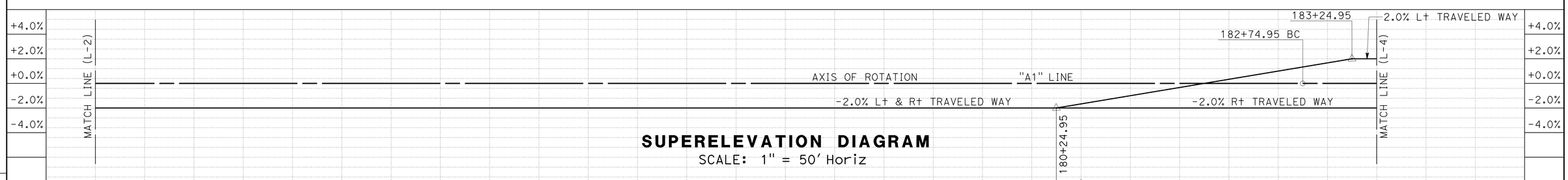

SUPERELEVATION DIAGRAM
SCALE: 1" = 50′ Horiz

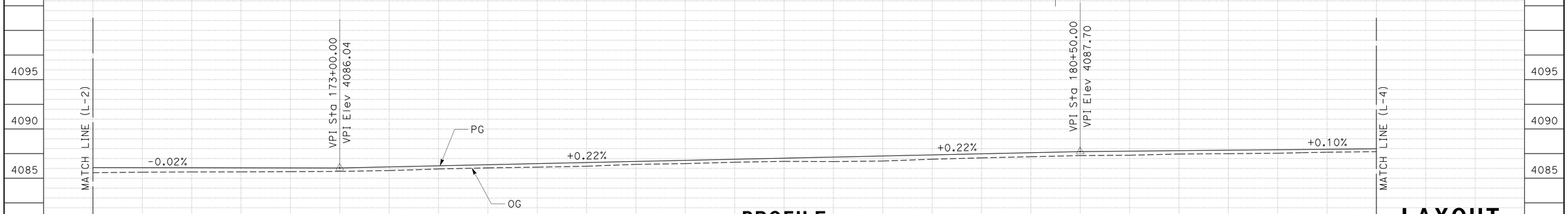

PROFILE
SCALE: 1" = 50′ Horiz
1" = 5′ Vert

LAYOUT
SCALE: AS SHOWN
L-3

STATION	1	2	3	4	175+00	6	7	8	9	180+00	1	2	3	TOTAL
CY Exc														
CY Emb														

REVISED BY | DATE REVISED
GINNY SEIBERT | RUSSELL FLOOD
CALCULATED-DESIGNED BY | CHECKED BY
FUNCTIONAL SUPERVISOR: STEVE TOPAL

STATE OF CALIFORNIA - DEPARTMENT OF TRANSPORTATION
Caltrans DESIGN

P:\proj1\02\4E800_plans\pse\24e800ea003.dgn

LAST REVISION 07-15-15 | DATE PLOTTED => 03-SEP-2015 | TIME PLOTTED => 08:57

Dist	COUNTY	ROUTE	POST MILES TOTAL PROJECT	SHEET No.	TOTAL SHEETS
02	Sis	161	2.7/4.5	6	23

Russell Flood 08-26-15
REGISTERED CIVIL ENGINEER DATE

08-31-15
PLANS APPROVAL DATE

REGISTERED PROFESSIONAL ENGINEER RUSSELL P. FLOOD No. C72261 Exp. 6-30-16 CIVIL STATE OF CALIFORNIA

THE STATE OF CALIFORNIA OR ITS OFFICERS OR AGENTS SHALL NOT BE RESPONSIBLE FOR THE ACCURACY OR COMPLETENESS OF SCANNED COPIES OF THIS PLAN SHEET.

NOTE:

1. FOR ACCURATE RIGHT OF WAY DATA, CONTACT RIGHT OF WAY ENGINEERING AT THE DISTRICT OFFICE.

CURVE DATA

No. ①	R	Δ	T	L
1	4750′	11°39′45″	485.11′	966.86′

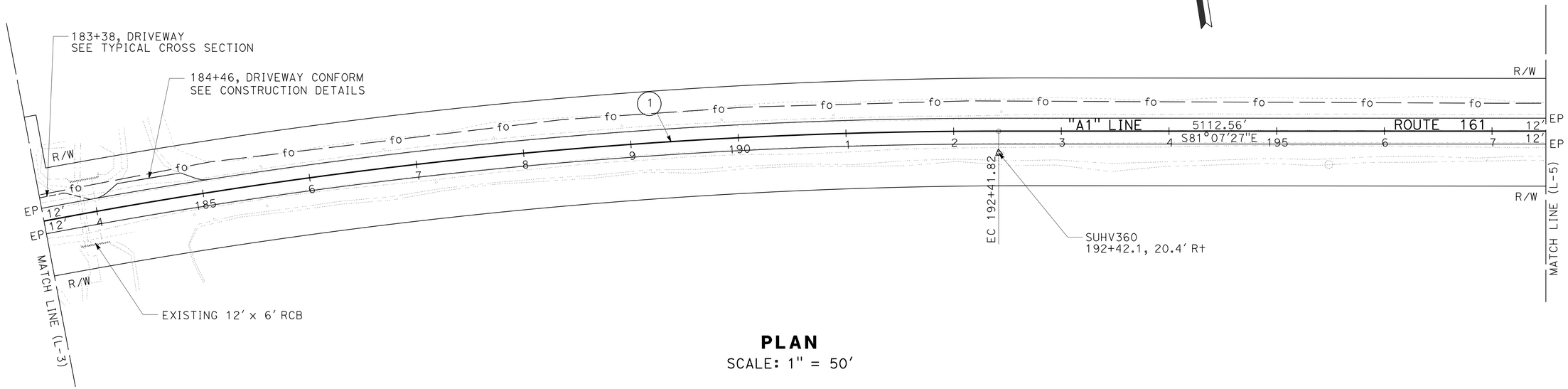

PLAN
SCALE: 1" = 50′

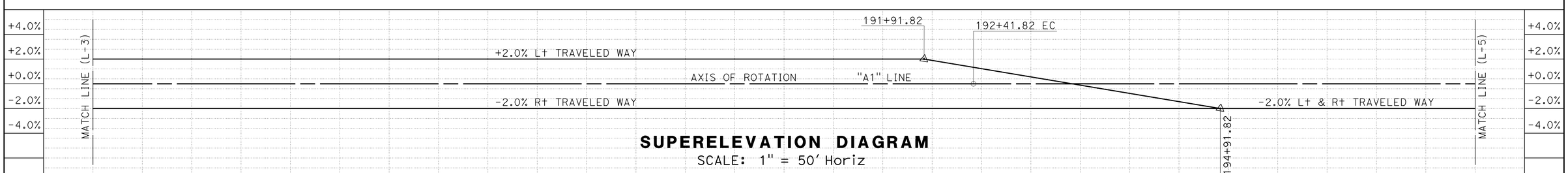

SUPERELEVATION DIAGRAM
SCALE: 1" = 50′ Horiz

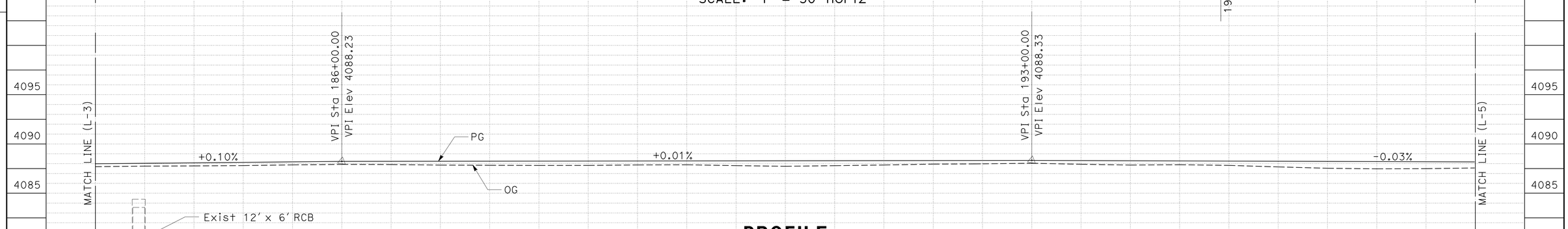

PROFILE
SCALE: 1" = 50′ Horiz
1" = 5′ Vert

LAYOUT
SCALE: AS SHOWN

L-4

STATION	4	185+00	6	7	8	9	190+00	1	2	3	4	195+00	6	7	TOTAL
CY Exc															
CY Emb															

REVISED BY | DATE REVISED
GINNY SEIBERT | RUSSELL FLOOD
CALCULATED-DESIGNED BY | CHECKED BY
FUNCTIONAL SUPERVISOR: STEVE TOPAL

STATE OF CALIFORNIA - DEPARTMENT OF TRANSPORTATION
Caltrans® DESIGN

P:\proj1\02\4E800_plans\pse\24e800ea004.dgn

LAST REVISION 07-15-15 | DATE PLOTTED => 03-SEP-2015 | TIME PLOTTED => 08:57

Dist	COUNTY	ROUTE	POST MILES TOTAL PROJECT	SHEET No.	TOTAL SHEETS
02	Sis	161	2.7/4.5	7	23

Russell Flood 08-26-15
REGISTERED CIVIL ENGINEER DATE

08-31-15
PLANS APPROVAL DATE

REGISTERED PROFESSIONAL ENGINEER RUSSELL P. FLOOD No. C72261 Exp. 6-30-16 CIVIL STATE OF CALIFORNIA

THE STATE OF CALIFORNIA OR ITS OFFICERS OR AGENTS SHALL NOT BE RESPONSIBLE FOR THE ACCURACY OR COMPLETENESS OF SCANNED COPIES OF THIS PLAN SHEET.

NOTE:

1. FOR ACCURATE RIGHT OF WAY DATA, CONTACT RIGHT OF WAY ENGINEERING AT THE DISTRICT OFFICE.

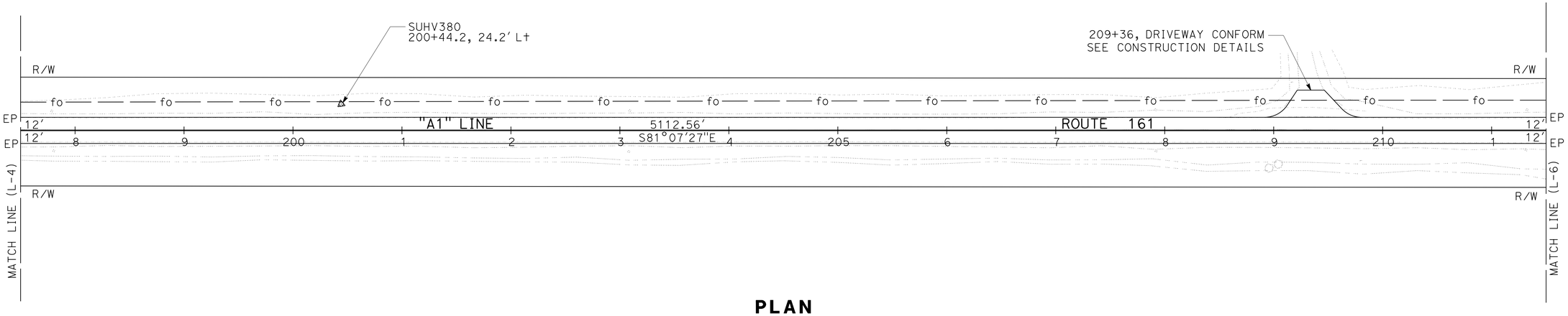

PLAN
SCALE: 1" = 50'

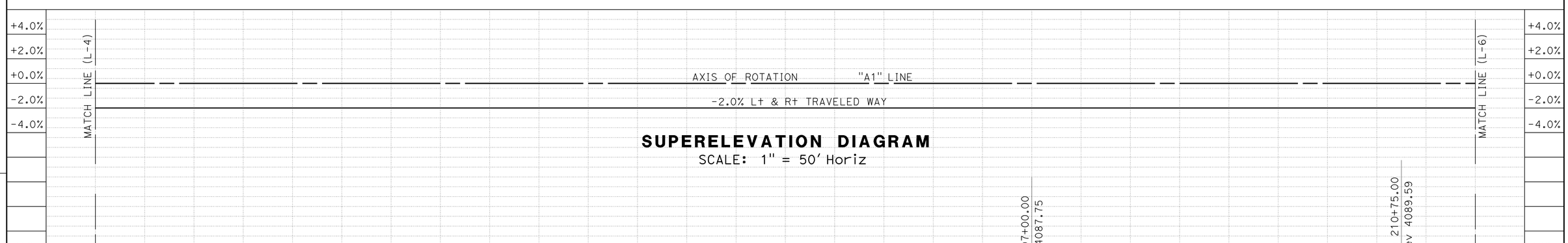

SUPERELEVATION DIAGRAM
SCALE: 1" = 50' Horiz

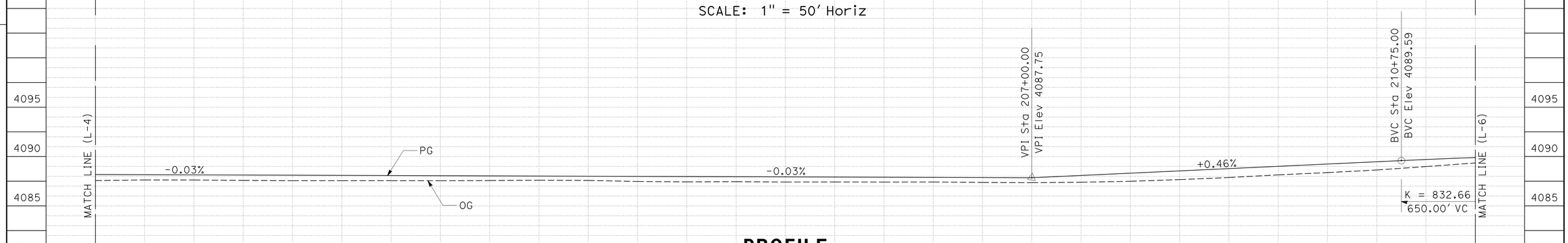

PROFILE
SCALE: 1" = 50' Horiz
1" = 5' Vert

LAYOUT
SCALE: AS SHOWN

L-5

STATION	8	9	200+00	1	2	3	4	205+00	6	7	8	9	210+00	1	TOTAL
CY Exc															
CY Emb															

REVISED BY | DATE REVISED
GINNY SEIBERT | RUSSELL FLOOD
CALCULATED-DESIGNED BY | CHECKED BY
FUNCTIONAL SUPERVISOR: STEVE TOPAL

STATE OF CALIFORNIA - DEPARTMENT OF TRANSPORTATION
Caltrans® DESIGN

P:\proj1\02\4E800_plans\pse\24e800ea005.dgn

LAST REVISION 07-15-15 | DATE PLOTTED => 03-SEP-2015 | TIME PLOTTED => 08:57

Dist	COUNTY	ROUTE	POST MILES TOTAL PROJECT	SHEET No.	TOTAL SHEETS
02	Sis	161	2.7/4.5	8	23

Russell Flood 08-26-15
REGISTERED CIVIL ENGINEER DATE

08-31-15
PLANS APPROVAL DATE

REGISTERED PROFESSIONAL ENGINEER
RUSSELL P. FLOOD
No. C72261
Exp. 6-30-16
CIVIL
STATE OF CALIFORNIA

THE STATE OF CALIFORNIA OR ITS OFFICERS OR AGENTS SHALL NOT BE RESPONSIBLE FOR THE ACCURACY OR COMPLETENESS OF SCANNED COPIES OF THIS PLAN SHEET.

NOTE:

1. FOR ACCURATE RIGHT OF WAY DATA, CONTACT RIGHT OF WAY ENGINEERING AT THE DISTRICT OFFICE.

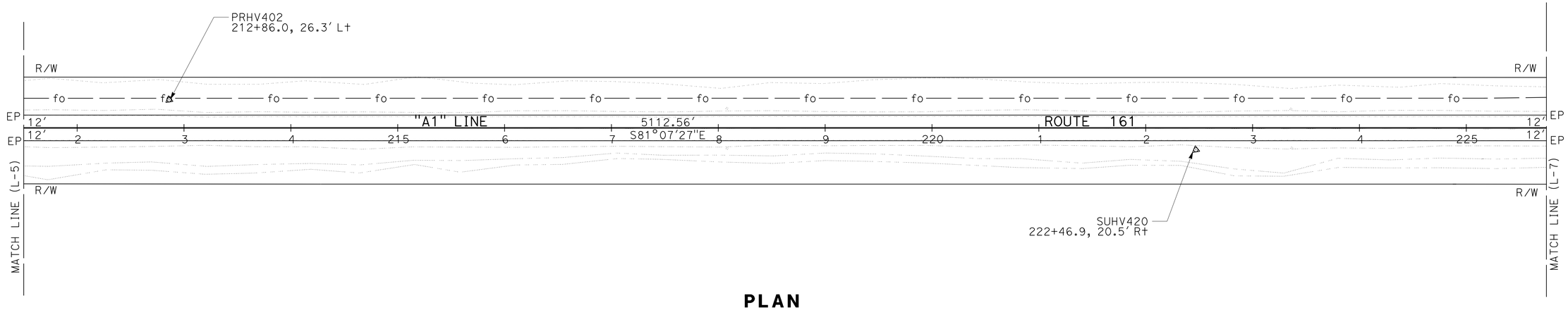

PLAN
SCALE: 1" = 50'

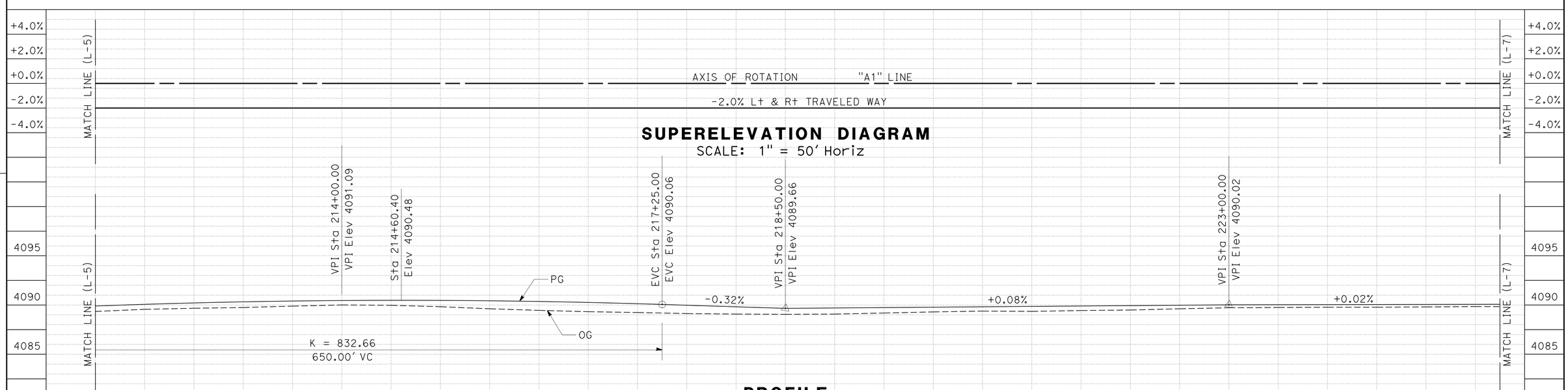

SUPERELEVATION DIAGRAM
SCALE: 1" = 50' Horiz

PROFILE
SCALE: 1" = 50' Horiz
1" = 5' Vert

LAYOUT
SCALE: AS SHOWN

L-6

REVISED BY | DATE REVISED
GINNY SEIBERT | RUSSELL FLOOD
CALCULATED-DESIGNED BY | CHECKED BY
FUNCTIONAL SUPERVISOR
STEVE TOPAL

STATE OF CALIFORNIA - DEPARTMENT OF TRANSPORTATION
Caltrans
DESIGN

P:\proj1\02\4E800_plans\pse\24e800ea006.dgn

LAST REVISION 07-15-15
DATE PLOTTED => 03-SEP-2015
TIME PLOTTED => 08:57

Dist	COUNTY	ROUTE	POST MILES TOTAL PROJECT	SHEET No.	TOTAL SHEETS
02	Sis	161	2.7/4.5	9	23

Russell Flood 08-26-15
REGISTERED CIVIL ENGINEER DATE

08-31-15
PLANS APPROVAL DATE

REGISTERED PROFESSIONAL ENGINEER RUSSELL P. FLOOD No. C72261 Exp. 6-30-16 CIVIL STATE OF CALIFORNIA

THE STATE OF CALIFORNIA OR ITS OFFICERS OR AGENTS SHALL NOT BE RESPONSIBLE FOR THE ACCURACY OR COMPLETENESS OF SCANNED COPIES OF THIS PLAN SHEET.

NOTE:

1. FOR ACCURATE RIGHT OF WAY DATA, CONTACT RIGHT OF WAY ENGINEERING AT THE DISTRICT OFFICE.

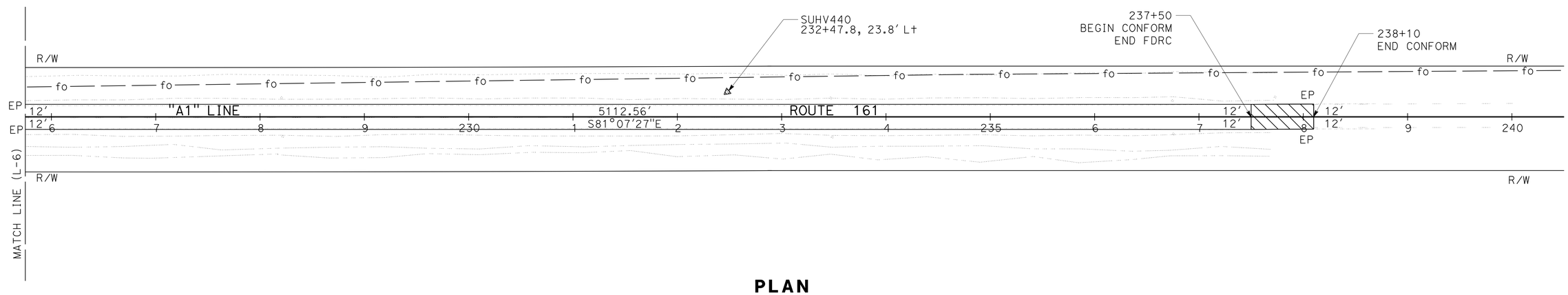

PLAN
SCALE: 1" = 50'

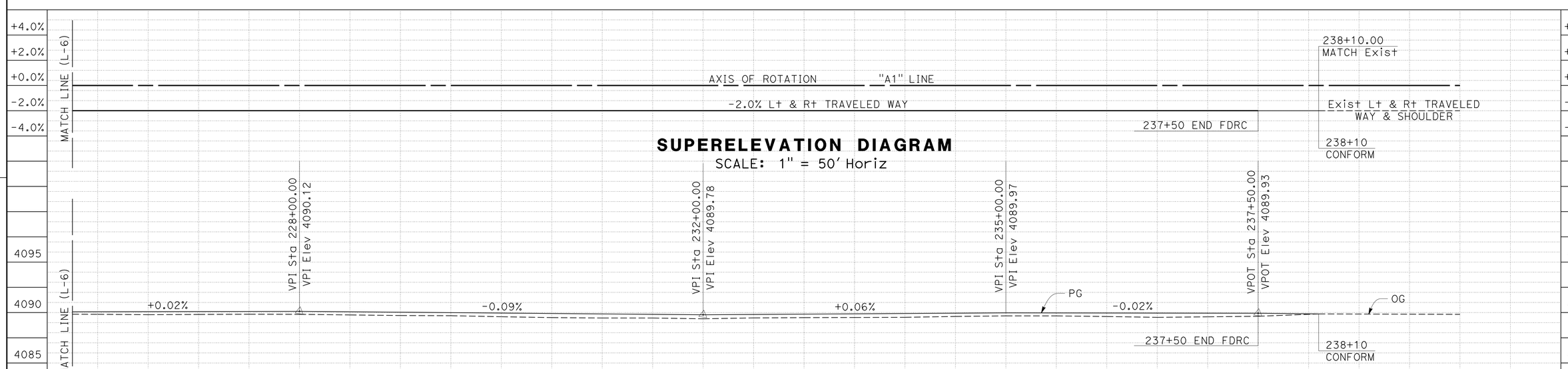

SUPERELEVATION DIAGRAM
SCALE: 1" = 50' Horiz

PROFILE
SCALE: 1" = 50' Horiz
1" = 5' Vert

LAYOUT
SCALE: AS SHOWN

L-7

REVISED BY	DATE REVISED

CALCULATED-DESIGNED BY	CHECKED BY
GINNY SEIBERT	RUSSELL FLOOD

FUNCTIONAL SUPERVISOR: STEVE TOPAL

STATE OF CALIFORNIA - DEPARTMENT OF TRANSPORTATION
Caltrans
DESIGN

P:\proj1\02\4E800_plans\pse\24e800ea007.dgn

LAST REVISION 07-15-15
DATE PLOTTED => 03-SEP-2015
TIME PLOTTED => 08:57

Dist	COUNTY	ROUTE	POST MILES TOTAL PROJECT	SHEET No.	TOTAL SHEETS
02	Sis	161	2.7/4.5	10	23

Russell Flood 08-26-15
REGISTERED CIVIL ENGINEER DATE

08-31-15
PLANS APPROVAL DATE

REGISTERED PROFESSIONAL ENGINEER RUSSELL P. FLOOD No. C72261 Exp. 6-30-16 CIVIL STATE OF CALIFORNIA

THE STATE OF CALIFORNIA OR ITS OFFICERS OR AGENTS SHALL NOT BE RESPONSIBLE FOR THE ACCURACY OR COMPLETENESS OF SCANNED COPIES OF THIS PLAN SHEET.

NOTES:

1. COLD PLANE EXISTING SURFACES TO ACCOMODATE A MINIMUM TAPER THICKNESS OF 0.10′ WHEN EITHER:
   A. HMA MATERIAL SUCH AS RUBBERIZED, POLYMER MODIFIED OR OPEN GRADED IS UNSUITABLE FOR RAKING TO A MAXIMUM 0.02′ THICKNESS AT THE CONFORM.
   B. TEMPORARY TAPER WILL BE IN PLACE FOR MORE THAN 14 DAYS.
2. PERMANENT SURFACE MAY BE EXISTING OR NEW PAVEMENT.
3. ROADWAY SURFACE IS THE TOP OF EXISTING SURFACE OR THE TOP OF THE PLANED SURFACE.
4. IF AUTHORIZED, YOU MAY USE ALTERNATIVE MATERIALS OR METHODS TO PRODUCE THE REQUIRED TAPER.
5. RADIUS POINTS ARE USED TO LOCATE EP FOR PAVED DRIVEWAYS.

LEGEND:

HMA MATERIAL (TEMPORARY TAPER) (SEE NOTE 4)

IF NECESSARY, COLD PLANE ASPHALT CONCRETE PAVEMENT AND PLACE HMA MATERIAL (SEE NOTE 1)

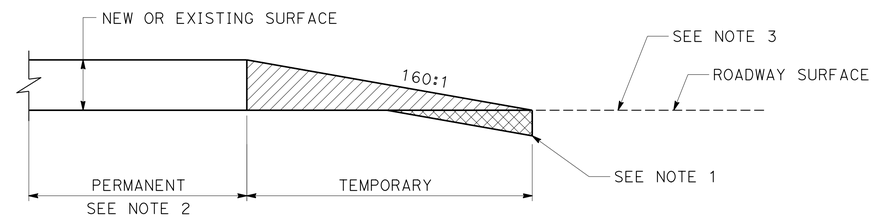

TYPICAL PAVING CONFORM FOR TEMPORARY CONSTRUCTION TAPERS

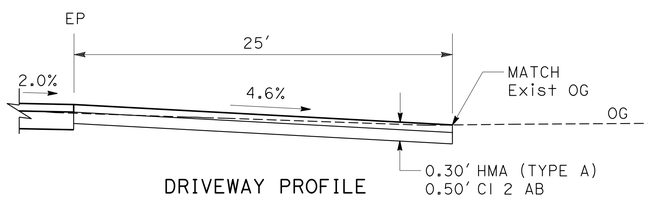

DRIVEWAY PROFILE
"A1" 160+91, R+

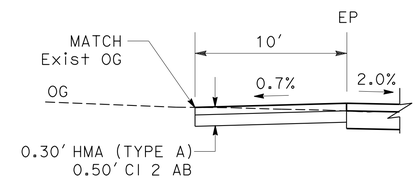

DRIVEWAY PROFILE
"A1" 184+46, L+

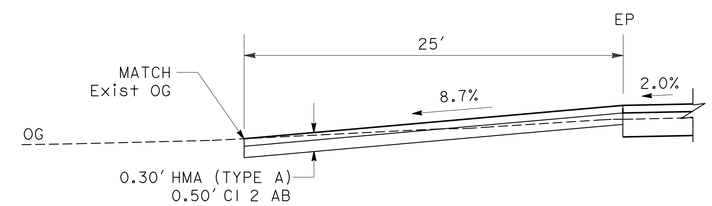

DRIVEWAY PROFILE
"A1" 209+36, L+

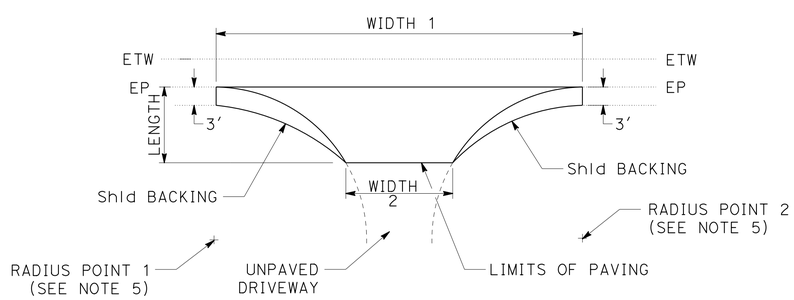

PLAN

DRIVEWAY CONNECTIONS CONFORM TAPERS

DRIVEWAY DIMENSIONS

LOCATION "A1" LINE	RADIUS POINT	RADIUS	"A1" Sta, OFFSET	WIDTH 1	WIDTH 2	LENGTH
				LF	LF	LF
160+91, R+	1	25′	160+57.6, 37.0′ R+	71	19	25
	2	25′	161+28.9, 37.0′ R+			
184+46, L+	1	25′	183+99.7, 37.0′ L+	108	60	10
	2	25′	185+07.0, 37.0′ L+			
209+36, L+	1	25′	208+91.6, 37.0′ L+	89	25	25
	2	25′	209+80.7, 37.0′ L+			

CONSTRUCTION DETAILS

NO SCALE

C-1

REVISED BY | DATE REVISED
GINNY SEIBERT | RUSSELL FLOOD
CALCULATED-DESIGNED BY | CHECKED BY
FUNCTIONAL SUPERVISOR: STEVE TOPAL

STATE OF CALIFORNIA - DEPARTMENT OF TRANSPORTATION
Caltrans DESIGN

P:\proj1\02\4E800_plans\pse\24e800ga001.dgn

LAST REVISION 07-14-15 | DATE PLOTTED => 03-SEP-2015 | TIME PLOTTED => 08:57

Dist	COUNTY	ROUTE	POST MILES TOTAL PROJECT	SHEET No.	TOTAL SHEETS
02	Sis	161	2.7/4.5	11	23

Russell Flood 08-26-15
REGISTERED CIVIL ENGINEER DATE

08-31-15
PLANS APPROVAL DATE

REGISTERED PROFESSIONAL ENGINEER RUSSELL P. FLOOD No. C72261 Exp. 6-30-16 CIVIL STATE OF CALIFORNIA

THE STATE OF CALIFORNIA OR ITS OFFICERS OR AGENTS SHALL NOT BE RESPONSIBLE FOR THE ACCURACY OR COMPLETENESS OF SCANNED COPIES OF THIS PLAN SHEET.

NOTES:

1. EXACT SIGN LOCATIONS TO BE DETERMINED BY THE ENGINEER.
2. EXISTING UTILITY FACILITIES HAVE NOT BEEN POSITIVELY LOCATED.
3. SIGNS SHOWN WITH (CA) INDICATE CALIFORNIA SIGN CODES, OTHERWISE FEDERAL SIGN CODES ARE SHOWN.
4. ALL CONSTRUCTION AREA SIGNS TO BE BLACK TEXT ON ORANGE BACKGROUND.

LEGEND:

SIGN (1 POST)

CONSTRUCTION AREA SIGNS (STATIONARY MOUNTED)

TYPE	CODE	PANEL SIZE	SIGN MESSAGE	NUMBER AND SIZE OF POSTS	No. OF SIGNS
(A)	W20-1 C23B(CA)	48" x 48" 36" x 18"	ROAD WORK AHEAD PAVEMENT MAINTENANCE	1-4" x 6"	2
(B)	G20-2	36" x 18"	END ROAD WORK	1-4" x 4"	2

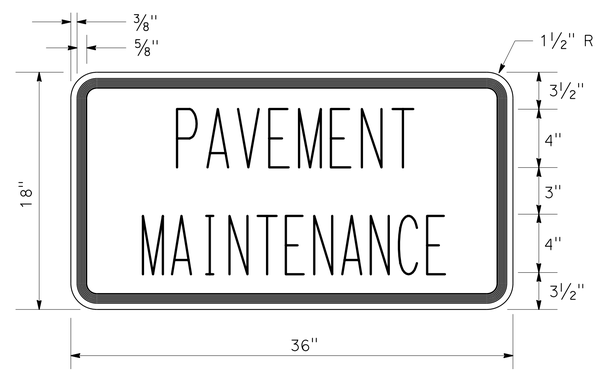

C23B(CA) SIGN PANEL DETAIL

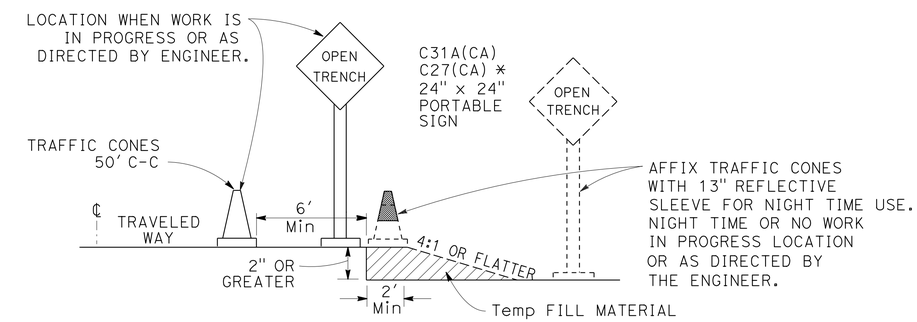

OPEN TRENCH SIGNING AND MARKING

* PLACE AT 250' INTERVALS THROUGH THE OPEN TRENCH AREA-ALTERNATE C27(CA) (OPEN TRENCH) AND C31A(CA) (NO SHOULDER) SIGNS

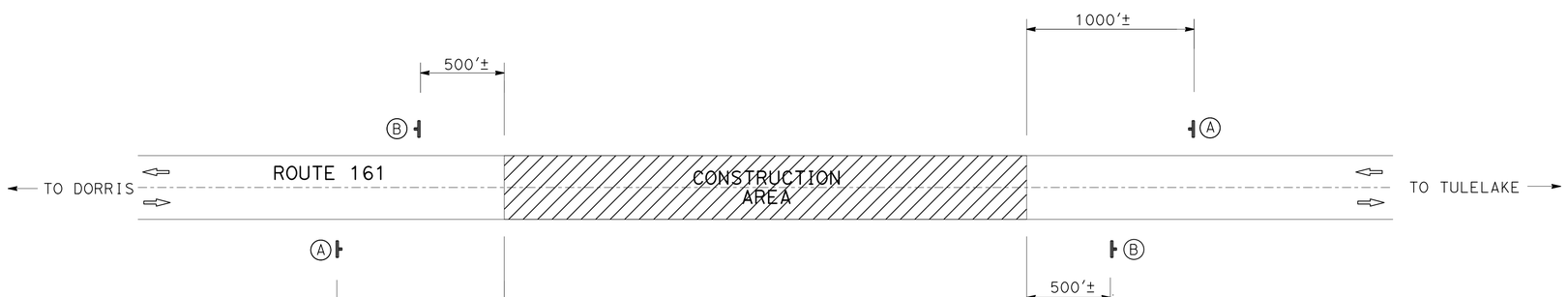

CONSTRUCTION AREA SIGNS

CONSTRUCTION AREA SIGNS

NO SCALE

CS-1

REVISED BY | DATE REVISED
GINNY SEIBERT | RUSSELL FLOOD
CALCULATED-DESIGNED BY | CHECKED BY
FUNCTIONAL SUPERVISOR: STEVE TOPAL

STATE OF CALIFORNIA - DEPARTMENT OF TRANSPORTATION
Caltrans DESIGN

P:\proj1\02\4E800_plans\pse\24e8001a001.dgn

LAST REVISION 05-14-12 | DATE PLOTTED => 03-SEP-2015 | TIME PLOTTED => 08:57

Dist	COUNTY	ROUTE	POST MILES TOTAL PROJECT	SHEET No.	TOTAL SHEETS
02	Sis	161	2.7/4.5	12	23

Russell Flood 08-26-15
REGISTERED CIVIL ENGINEER DATE

08-31-15
PLANS APPROVAL DATE

REGISTERED PROFESSIONAL ENGINEER
RUSSELL P. FLOOD
No. C72261
Exp. 6-30-16
CIVIL
STATE OF CALIFORNIA

THE STATE OF CALIFORNIA OR ITS OFFICERS OR AGENTS SHALL NOT BE RESPONSIBLE FOR THE ACCURACY OR COMPLETENESS OF SCANNED COPIES OF THIS PLAN SHEET.

LEGEND:

- BEGIN/END STRIPE
- STRIPE CHANGE LOCATION
- DELINEATOR (TYPE F)
- DELINEATOR (TYPE E)
- OBJECT MARKER (TYPE L)
- MILEPOST MARKER
- S DELINEATOR SPACING
- REMOVE DELINEATOR
- REMOVE MILEPOST MARKER

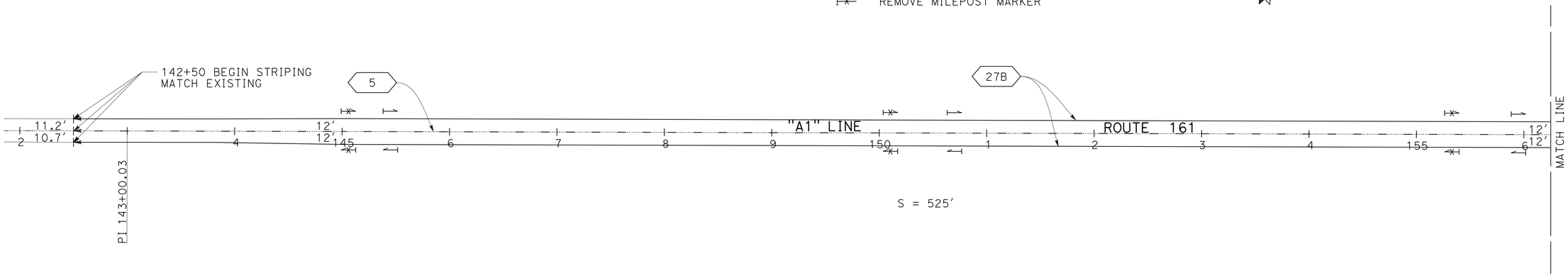

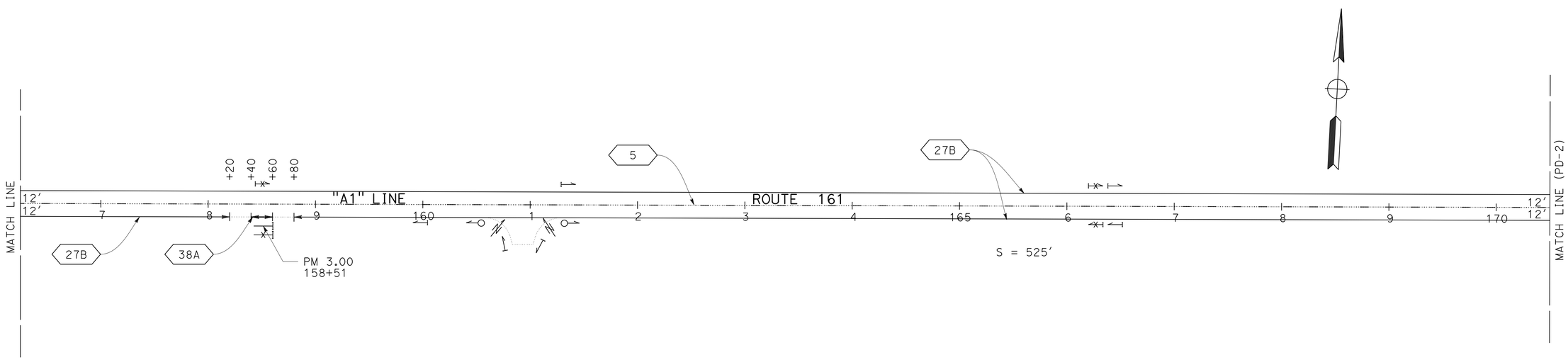

PAVEMENT DELINEATION PLAN

SCALE: 1" = 50'

PD-1

APPROVED FOR PAVEMENT DELINEATION WORK ONLY

REVISED BY | DATE REVISED
GINNY SEIBERT | RUSSELL FLOOD
CALCULATED-DESIGNED BY | CHECKED BY
FUNCTIONAL SUPERVISOR: STEVE TOPAL

STATE OF CALIFORNIA - DEPARTMENT OF TRANSPORTATION
Caltrans® DESIGN

P:\proj1\02\4E800_plans\pse\24e800na001.dgn

LAST REVISION 07-20-15 | DATE PLOTTED => 03-SEP-2015 | TIME PLOTTED => 08:57

Dist	COUNTY	ROUTE	POST MILES TOTAL PROJECT	SHEET No.	TOTAL SHEETS
02	Sis	161	2.7/4.5	13	23

Russell Flood 08-26-15
REGISTERED CIVIL ENGINEER DATE

08-31-15
PLANS APPROVAL DATE

REGISTERED PROFESSIONAL ENGINEER
RUSSELL P. FLOOD
No. C72261
Exp. 6-30-16
CIVIL
STATE OF CALIFORNIA

THE STATE OF CALIFORNIA OR ITS OFFICERS OR AGENTS SHALL NOT BE RESPONSIBLE FOR THE ACCURACY OR COMPLETENESS OF SCANNED COPIES OF THIS PLAN SHEET.

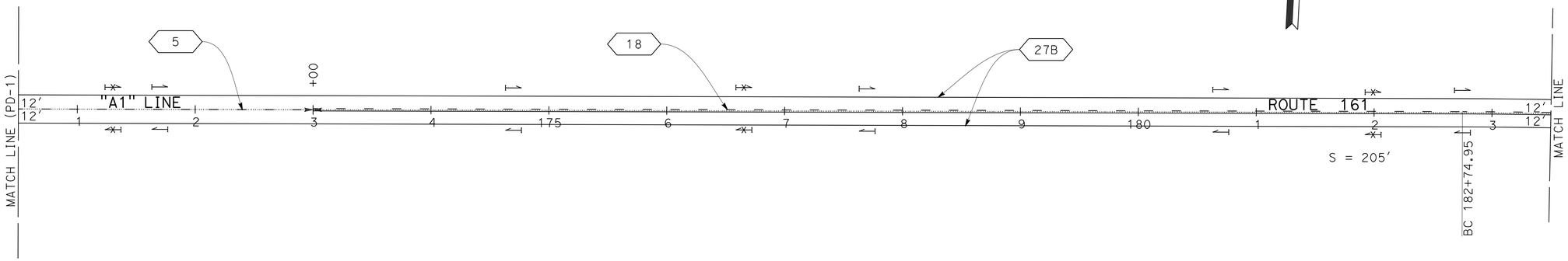

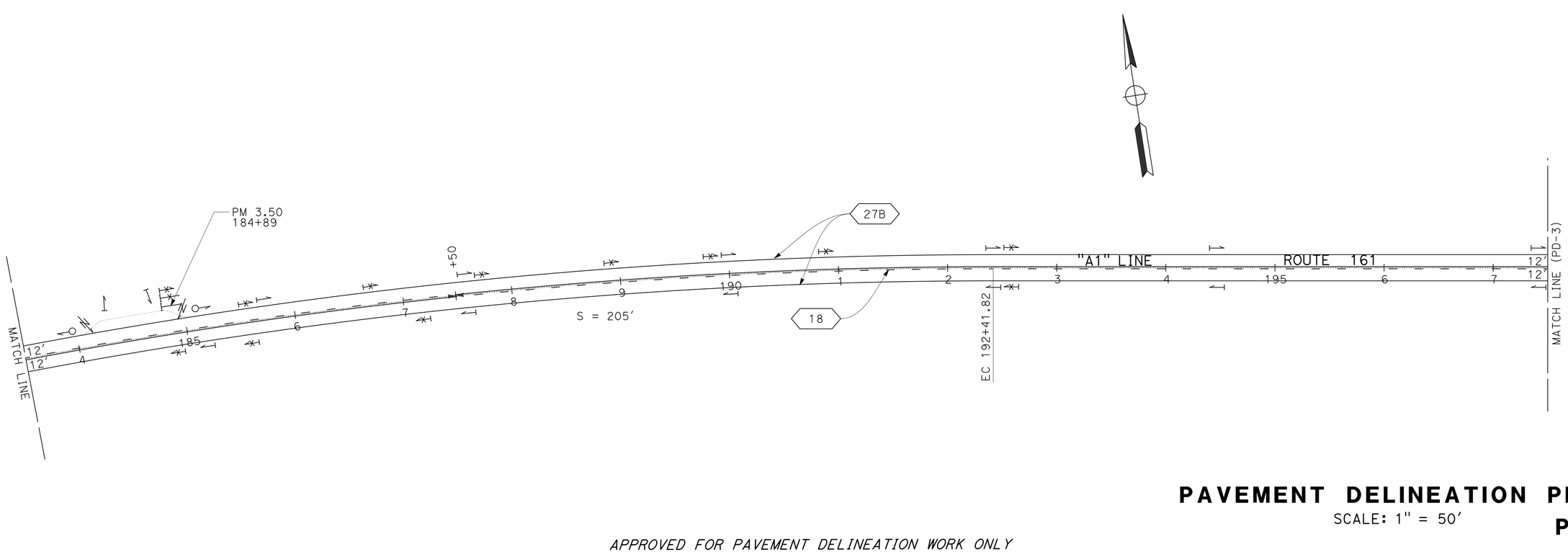

PAVEMENT DELINEATION PLAN

SCALE: 1" = 50'

PD-2

APPROVED FOR PAVEMENT DELINEATION WORK ONLY

REVISED BY	DATE REVISED

CALCULATED-DESIGNED BY	GINNY SEIBERT
CHECKED BY	RUSSELL FLOOD
FUNCTIONAL SUPERVISOR	STEVE TOPAL

STATE OF CALIFORNIA - DEPARTMENT OF TRANSPORTATION
Caltrans
DESIGN

P:\proj1\02\4E800_plans\pse\24e800na002.dgn

LAST REVISION 07-20-15
DATE PLOTTED => 03-SEP-2015
TIME PLOTTED => 08:57

Dist	COUNTY	ROUTE	POST MILES TOTAL PROJECT	SHEET No.	TOTAL SHEETS
02	Sis	161	2.7/4.5	14	23

Russell Flood 08-26-15
REGISTERED CIVIL ENGINEER DATE

08-31-15
PLANS APPROVAL DATE

REGISTERED PROFESSIONAL ENGINEER
RUSSELL P. FLOOD
No. C72261
Exp. 6-30-16
CIVIL
STATE OF CALIFORNIA

THE STATE OF CALIFORNIA OR ITS OFFICERS OR AGENTS SHALL NOT BE RESPONSIBLE FOR THE ACCURACY OR COMPLETENESS OF SCANNED COPIES OF THIS PLAN SHEET.

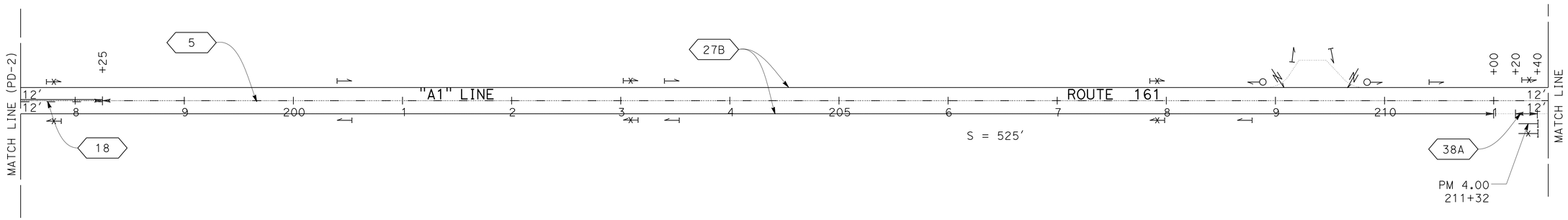

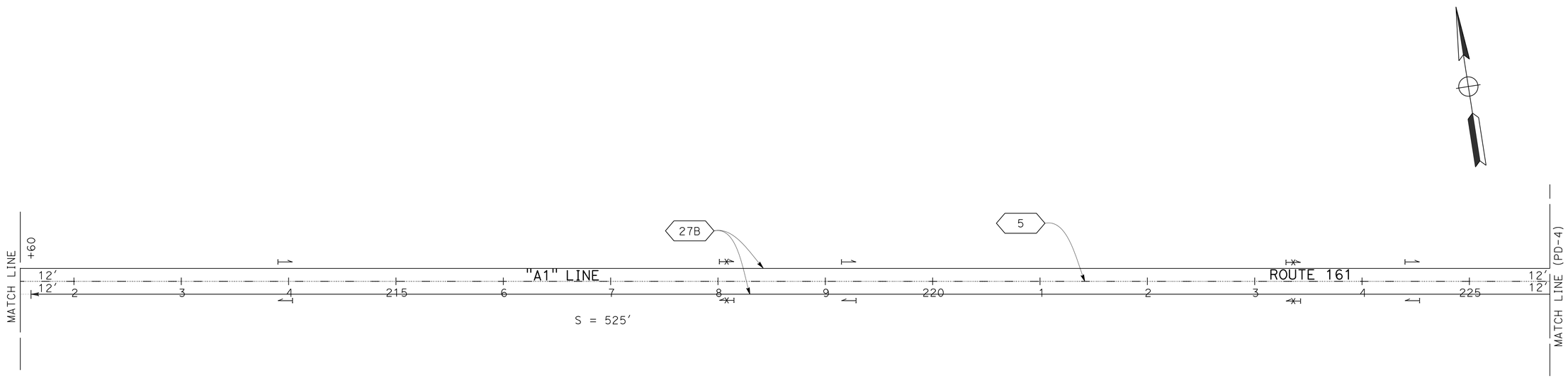

PAVEMENT DELINEATION PLAN

SCALE: 1" = 50'

PD-3

APPROVED FOR PAVEMENT DELINEATION WORK ONLY

REVISED BY	DATE REVISED
GINNY SEIBERT	RUSSELL FLOOD

CALCULATED-DESIGNED BY / CHECKED BY

FUNCTIONAL SUPERVISOR: STEVE TOPAL

STATE OF CALIFORNIA - DEPARTMENT OF TRANSPORTATION

Caltrans

DESIGN

P:\proj\02\4E800_plans\pse\24e800na003.dgn

LAST REVISION 07-20-15 | DATE PLOTTED => 03-SEP-2015 | TIME PLOTTED => 08:57

Dist	COUNTY	ROUTE	POST MILES TOTAL PROJECT	SHEET No.	TOTAL SHEETS
02	Sis	161	2.7/4.5	15	23

Russell Flood 08-26-15
REGISTERED CIVIL ENGINEER DATE

08-31-15
PLANS APPROVAL DATE

REGISTERED PROFESSIONAL ENGINEER RUSSELL P. FLOOD No. C72261 Exp. 6-30-16 CIVIL STATE OF CALIFORNIA

THE STATE OF CALIFORNIA OR ITS OFFICERS OR AGENTS SHALL NOT BE RESPONSIBLE FOR THE ACCURACY OR COMPLETENESS OF SCANNED COPIES OF THIS PLAN SHEET.

NOTE:

1. THE MARKER SHALL BE WHITE (NON-REFLECTIVE) TARGET PLATE WITH BLACK SERIES D NUMERALS AND LETTERS STENCILED IN BLACK ENAMEL.

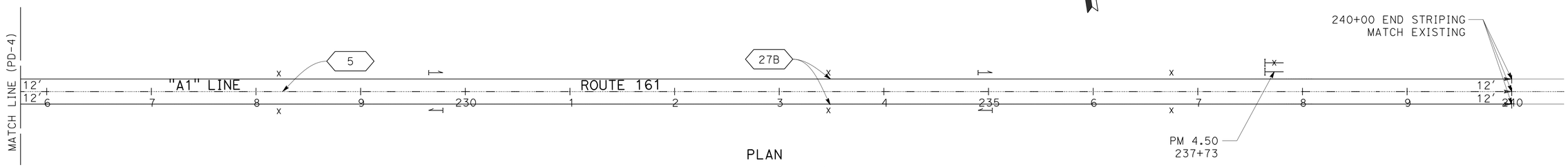

PLAN
SCALE: 1" = 50'

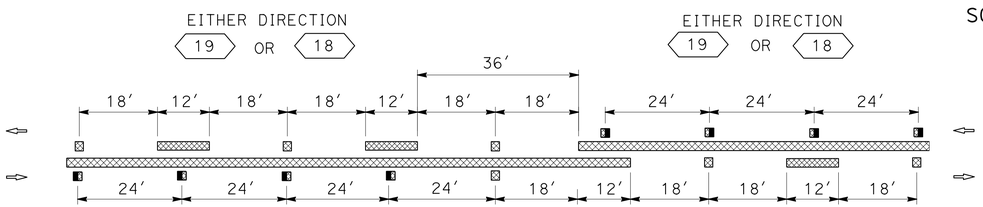

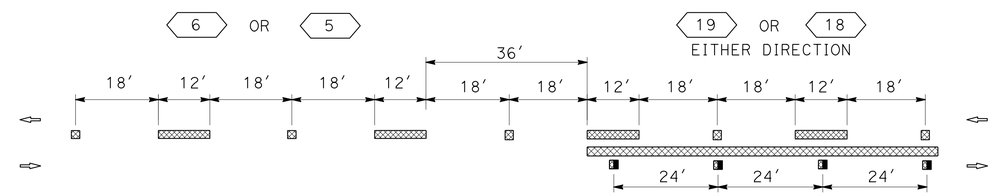

TYPICAL STRIPE TRANSITION DETAILS

NO SCALE

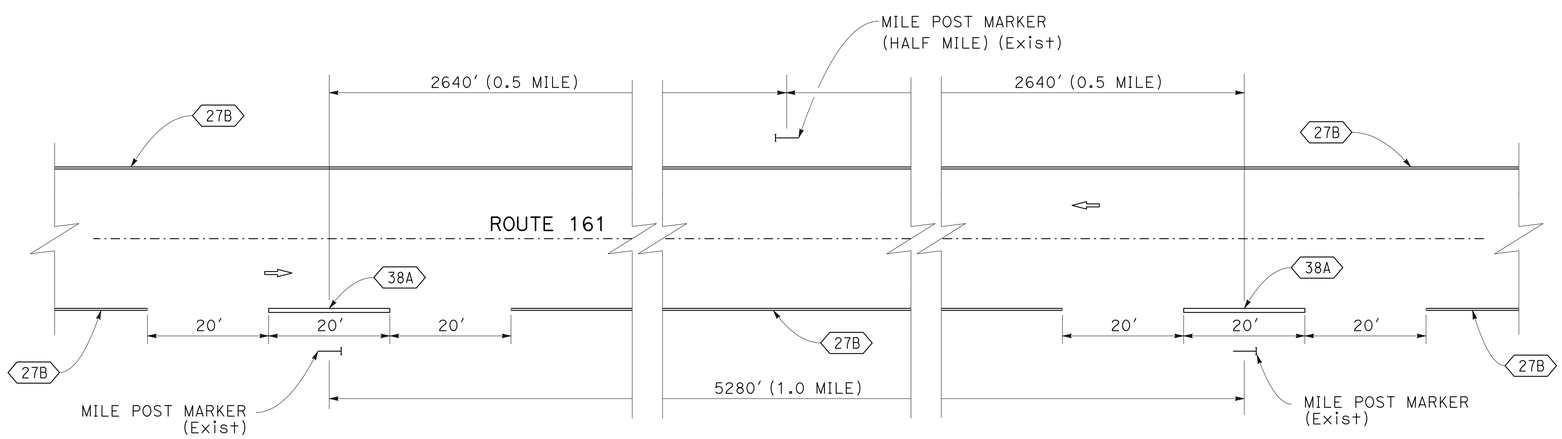

TYPICAL HALF MILE AND MILE POST STRIPE (CONVENTIONAL ROADWAY)

NO SCALE

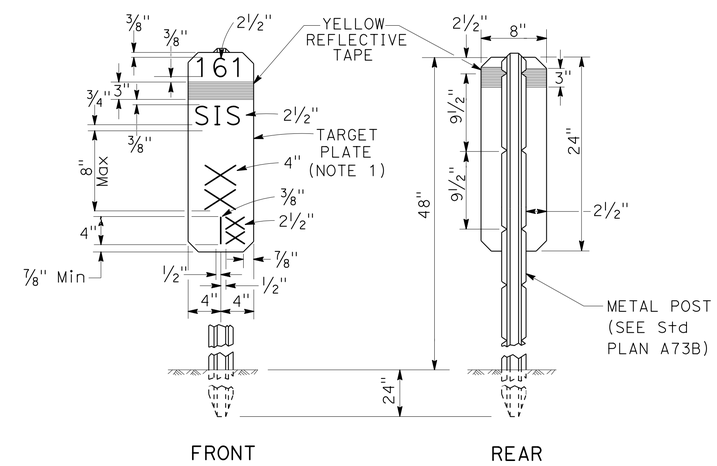

POST MILE MARKER DETAIL

APPROVED FOR PAVEMENT DELINEATION WORK ONLY

PAVEMENT DELINEATION PLAN AND DETAILS

SCALE: AS SHOWN

PD-4

REVISED BY | DATE REVISED
GINNY SEIBERT | RUSSELL FLOOD
CALCULATED-DESIGNED BY | CHECKED BY
FUNCTIONAL SUPERVISOR: STEVE TOPAL

STATE OF CALIFORNIA - DEPARTMENT OF TRANSPORTATION
Caltrans® DESIGN

P:\proj1\02\4E800_plans\pse\24e800na004.dgn

LAST REVISION 07-21-15 | DATE PLOTTED => 03-SEP-2015 | TIME PLOTTED => 08:57

BORDER LAST REVISED 7/2/2010 | USERNAME => s115152 | DGN FILE => 24e800na004.dgn | RELATIVE BORDER SCALE IS IN INCHES 0 1 2 3 | UNIT 0319 | PROJECT NUMBER & PHASE 02120000611

Dist	COUNTY	ROUTE	POST MILES TOTAL PROJECT	SHEET No.	TOTAL SHEETS
02	Sis	161	2.7/4.5	16	23

Russell Flood 08-26-15
REGISTERED CIVIL ENGINEER DATE

08-31-15
PLANS APPROVAL DATE

REGISTERED PROFESSIONAL ENGINEER RUSSELL P. FLOOD No. C72261 Exp. 6-30-16 CIVIL STATE OF CALIFORNIA

THE STATE OF CALIFORNIA OR ITS OFFICERS OR AGENTS SHALL NOT BE RESPONSIBLE FOR THE ACCURACY OR COMPLETENESS OF SCANNED COPIES OF THIS PLAN SHEET.

NOTE:

1. (N) - NOT A SEPARATE PAY ITEM, FOR INFORMATION ONLY

ROADWAY QUANTITIES

STATION "A1" LINE	CONFORM AREA (N)	COLD PLANE ASPHALT CONCRETE PAVEMENT	ROADWAY EXCAVATION	SHOULDER BACKING	CLASS 2 AGGREGATE BASE	FULL-DEPTH RECLAMATION-CEMENT	CEMENT (FULL-DEPTH RECLAMATION-CEMENT)	SUPPLEMENTARY AGGREGATE (FULL-DEPTH RECLAMATION-CEMENT)	ASPHALTIC EMULSION (FULL-DEPTH RECLAMATION-CEMENT)	HOT MIX ASPHALT (TYPE A)	TACK COAT	DESCRIPTION
	SQYD	SQYD	CY	TON	CY	SQYD	TON	TON	TON	TON	TON	
143+80 TO 145+00	306	306								47	0.13	MAINLINE CONFORM
145+00 TO 237+50				3179		24,640	493	1305	11.3	5103	5.24	
160+91, R+	88		19	5	15					18	0.04	DRIVEWAY
184+46, L+	86		19	3	14					18	0.04	DRIVEWAY
209+36, L+	129		28	5	22					26	0.06	DRIVEWAY
237+50 TO 238+10	160	160								16	0.07	MAINLINE CONFORM
TOTAL		466	66	3192	51	24,640	493	1305	11.3	5228	5.58	

DELINEATORS AND MARKERS

SHEET No.	STATION "A1" LINE	REMOVE MARKER	REMOVE DELINEATOR	DELINEATOR (CLASS 2)		MILEPOST MARKER	OBJECT MARKER (TYPE L-1)
				TYPE E	TYPE F		
		EA	EA	EA	EA	EA	EA
PD-1	142+50 TO 170+50	1	9	2	12	1	2
PD-2	170+50 TO 197+50	1	18	2	24	1	2
PD-3	197+50 TO 225+75	1	11	2	14	1	2
PD-4	225+75 TO 240+00	1	6		4	1	
SUBTOTAL				6	54		
TOTAL		4	44	60		4	6

WATER POLLUTION CONTROL

STATION "A1" LINE	TEMPORARY FIBER ROLL
	LF
145+00 TO 237+50	400

THERMOPLASTIC TRAFFIC STRIPE (SPRAYABLE)

SHEET No.	STATION "A1" LINE	DETAIL 5	DETAIL 18	DETAIL 27B	DETAIL 38A
		LF	LF	LF	LF
PD-1	142+50 TO 170+50	2800		5540	20
PD-2	170+50 TO 197+50	250	2450	5400	
PD-3	197+50 TO 225+75	2750	75	5590	20
PD-4	225+75 TO 240+00	1425		2850	
SUBTOTAL		7225	2525	19,380	40
TOTAL		29,170			

SUMMARY OF QUANTITIES

Q-1

GINNY SEIBERT — REVISED BY
RUSSELL FLOOD — DATE REVISED
CALCULATED-DESIGNED BY
CHECKED BY
FUNCTIONAL SUPERVISOR
STEVE TOPAL

STATE OF CALIFORNIA - DEPARTMENT OF TRANSPORTATION
Caltrans DESIGN

P:\proj1\02\4E800_plans\pse\24e800pa001.dgn

LAST REVISION 08-04-15 DATE PLOTTED => 03-SEP-2015 TIME PLOTTED => 08:57

Dist	COUNTY	ROUTE	POST MILES TOTAL PROJECT	SHEET No.	TOTAL SHEETS
02	Sis	161	2.7/4.5	17	23

Grace M. Tsushima
REGISTERED CIVIL ENGINEER

July 19, 2013
PLANS APPROVAL DATE

REGISTERED PROFESSIONAL ENGINEER Grace M. Tsushima No. C49814 Exp. 9-30-14 CIVIL STATE OF CALIFORNIA

THE STATE OF CALIFORNIA OR ITS OFFICERS OR AGENTS SHALL NOT BE RESPONSIBLE FOR THE ACCURACY OR COMPLETENESS OF SCANNED COPIES OF THIS PLAN SHEET.

TO ACCOMPANY PLANS DATED 08-31-15

M

Maint	MAINTENANCE
Max	MAXIMUM
MB	METAL BEAM
MBB	METAL BEAM BARRIER
MBGR	METAL BEAM GUARD RAILING
Med	MEDIAN
MGS	MIDWEST GUARDRAIL SYSTEM
MH	MANHOLE
Min	MINIMUM
Misc	MISCELLANEOUS
Misc I & S	MISCELLANEOUS IRON AND STEEL
Mkr	MARKER
Mod	MODIFIED, MODIFY
Mon	MONUMENT
MP	METAL PLATE
MPGR	METAL PLATE GUARD RAILING
MR	MOVEMENT RATING
MSE	MECHANICALLY STABILIZED EMBANKMENT
Mt	MOUNTAIN, MOUNT
Mtl	MATERIAL
MVP	MAINTENANCE VEHICLE PULLOUT

N

N	NORTH
NB	NORTHBOUND
No.	NUMBER (MUST HAVE PERIOD)
Nos.	NUMBERS (MUST HAVE PERIOD)
NPS	NOMINAL PIPE SIZE
NS	NEAR SIDE
NSP	NEW STANDARD PLAN
NTS	NOT TO SCALE

O

Oblr	OBLITERATE
OC	OVERCROSSING
OD	OUTSIDE DIAMETER
OF	OUTSIDE FACE
OG	ORIGINAL GROUND
OGAC	OPEN GRADED ASPHALT CONCRETE
OGFC	OPEN GRADED FRICTION COURSE
OH	OVERHEAD
OHWM	ORDINARY HIGH WATER MARK
O-O	OUT TO OUT
Opp	OPPOSITE
OSD	OVERSIDE DRAIN

P

P	PAGE
PAP	PERFORATED ALUMINUM PIPE
PB	PULL BOX
PC	POINT OF CURVATURE, PRECAST
PCC	POINT OF COMPOUND CURVE, PORTLAND CEMENT CONCRETE
PCMS	PORTABLE CHANGEABLE MESSAGE SIGN
PCP	PERFORATED CONCRETE PIPE, PRESTRESSED CONCRETE PIPE
PCVC	POINT OF COMPOUND VERTICAL CURVE
PEC	PERMIT TO ENTER AND CONSTRUCT
Ped	PEDESTRIAN
Ped OC	PEDESTRIAN OVERCROSSING
Ped UC	PEDESTRIAN UNDERCROSSING
Perm Mtl	PERMEABLE MATERIAL

P continued

PG	PROFILE GRADE
PI	POINT OF INTERSECTION
PJP	PARTIAL JOINT PENETRATION
Pkwy	PARKWAY
₱,PL	PLATE
P/L	PROPERTY LINE
PM	POST MILE, TIME FROM NOON TO MIDNIGHT
PN	PAVING NOTCH
POC	POINT OF HORIZONTAL CURVE
POT	POINT OF TANGENT
POVC	POINT OF VERTICAL CURVE
PP	PIPE PILE, PLASTIC PIPE, POWER POLE
PPL	PREFORMED PERMEABLE LINER
PPP	PERFORATED PLASTIC PIPE
PRC	POINT OF REVERSE CURVE
PRF	PAVEMENT REINFORCING FABRIC
PRVC	POINT OF REVERSE VERTICAL CURVE
PS&E	PLANS, SPECIFICATIONS AND ESTIMATES
PS, P/S	PRESTRESSED
PSP	PERFORATED STEEL PIPE
PT	POINT OF TANGENCY
PVC	POLYVINYL CHLORIDE
Pvmt	PAVEMENT

Q

Qty	QUANTITY

R

R	RADIUS
R & D	REMOVE AND DISPOSE
R & S	REMOVE AND SALVAGE
R/C	RATE OF CHANGE
RCA	REINFORCED CONCRETE ARCH
RCB	REINFORCED CONCRETE BOX
RCP	REINFORCED CONCRETE PIPE
RCPA	REINFORCED CONCRETE PIPE ARCH
Rd	ROAD
Reinf	REINFORCED, REINFORCEMENT, REINFORCING
Rel	RELOCATE
Repl	REPLACEMENT
Ret	RETAINING
Rev	REVISED, REVISION
Rdwy	ROADWAY
RHMA	RUBBERIZED HOT MIX ASPHALT
Riv	RIVER
RM	ROAD-MIXED
RP	RADIUS POINT, REFERENCE POINT
RR	RAILROAD
RSP	ROCK SLOPE PROTECTION, REVISED STANDARD PLAN
Rt	RIGHT
Rte	ROUTE
RW	REDWOOD, RETAINING WALL
R/W	RIGHT OF WAY
Rwy	RAILWAY

S

S	SOUTH, SUPPLEMENT
SAE	STRUCTURE APPROACH EMBANKMENT
Salv	SALVAGE
SAPP	STRUCTURAL ALUMINUM PLATE PIPE
SB	SOUTHBOUND
SC	SAND CUSHION
SCSP	SLOTTED CORRUGATED STEEL PIPE
SD	STORM DRAIN
Sec	SECOND, SECTION
Sep	SEPARATION
SG	SUBGRADE
Shld	SHOULDER
Sht	SHEET
Sim	SIMILAR
℄	STATION LINE
SM	SELECTED MATERIAL
Spec	SPECIAL, SPECIFICATIONS
SPP	SLOTTED PLASTIC PIPE
SS	SLOPE STAKE
SSBM	STRAP AND SADDLE BRACKET METHOD
SSD	STRUCTURAL SECTION DRAIN
SSPA	STRUCTURAL STEEL PLATE ARCH
SSPP	STRUCTURAL STEEL PLATE PIPE
SSPPA	STRUCTURAL STEEL PLATE PIPE ARCH
SSRP	STEEL SPIRAL RIB PIPE
St	STREET
Sta	STATION
STBB	SINGLE THRIE BEAM BARRIER
Std	STANDARD
Str	STRUCTURE
Surf	SURFACING
SW	SIDEWALK, SOUND WALL
Swr	SEWER
Sym	SYMMETRICAL
S4S	SURFACE 4 SIDES

T

T	SEMI-TANGENT
Tan	TANGENT
TBB	THRIE BEAM BARRIER
Tbr	TIMBER
TC	TOP OF CURB
TCB	TRAFFIC CONTROL BOX
TCE	TEMPORARY CONSTRUCTION EASEMENT
Tel	TELEPHONE
Temp	TEMPORARY
TG	TOP OF GRADE
Tot	TOTAL
TP	TELEPHONE POLE
TPB	TREATED PERMEABLE BASE
TPM	TREATED PERMEABLE MATERIAL
Trans	TRANSITION

T continued

TS	TRANSVERSE, TRAFFIC SIGNAL, TUBULAR STEEL
Typ	TYPICAL

U

UC	UNDERCROSSING
UD	UNDERDRAIN
UG	UNDERGROUND
UON	UNLESS OTHERWISE NOTED
UP	UNDERPASS

V

V	VALVE, DESIGN SPEED
Var	VARIABLE, VARIES
VC	VERTICAL CURVE
VCP	VITRIFIED CLAY PIPE
Vert	VERTICAL
Via	VIADUCT
Vol	VOLUME

W

W	WEST, WIDTH
WB	WESTBOUND
WH	WEEP HOLE
WM	WIRE MESH
WS	WATER SURFACE
WSP	WELDED STEEL PIPE
Wt	WEIGHT
WV	WATER VALVE
WW	WINGWALL
WWLOL	WINGWALL LAYOUT LINE

X

X Sec	CROSS SECTION
Xing	CROSSING

Y

Yr	YEAR
Yrs	YEARS

UNIT OF MEASUREMENT SYMBOLS:

Some of the symbols used in the project plan quantity tables and in the Bid Item List are:

TABLE A

SYMBOL USED	DEFINITIONS
ACRE	ACRE
CF	CUBIC FOOT
CY	CUBIC YARD
EA	EACH
GAL	GALLON
LB	POUND
LF	LINEAR FOOT
SQFT	SQUARE FOOT
SQYD	SQUARE YARD
STA	100 FEET
TAB	TABLET
TON	2,000 POUNDS

Some of the symbols used in the plans other than in the project plan quantity tables are:

TABLE B

SYMBOL USED	DEFINITIONS
ksi	KIPS PER SQUARE INCH
ksf	KIPS PER SQUARE FOOT
psi	POUNDS PER SQUARE INCH
psf	POUNDS PER SQUARE FOOT
lb/ft^3, pcf	POUNDS PER CUBIC FOOT
tsf	TONS PER SQUARE FOOT
mph, MPH *	MILES PER HOUR
ø	NOMINAL DIAMETER
oz	OUNCE
lb	POUND
kip	1,000 POUNDS
cal	CALORIE
ft	FOOT OR FEET
gal	GALLON

* For use on a sign panel only

STATE OF CALIFORNIA
DEPARTMENT OF TRANSPORTATION

ABBREVIATIONS (SHEET 2 OF 2)

NO SCALE

RSP A10B DATED JULY 19, 2013 SUPERSEDES STANDARD PLAN A10B DATED MAY 20, 2011 - PAGE 2 OF THE STANDARD PLANS BOOK DATED 2010.

REVISED STANDARD PLAN RSP A10B

2010 REVISED STANDARD PLAN RSP A10B

P:\proj1\02\4E800_plans\pse\24e800va001.dgn

USERNAME => s115152
DGN FILE => 24e800va001.dgn

DATE PLOTTED => 03-SEP-2015
TIME PLOTTED => 08:57

DIST	COUNTY	ROUTE	POST MILES TOTAL PROJECT	SHEET No.	TOTAL SHEETS
02	Sis	161	2.7/4.5	18	23

REGISTERED CIVIL ENGINEER

January 20, 2012
PLANS APPROVAL DATE

REGISTERED PROFESSIONAL ENGINEER Cornelis M. Hakim No. C55610 Exp. 12-31-12 CIVIL STATE OF CALIFORNIA

THE STATE OF CALIFORNIA OR ITS OFFICERS OR AGENTS SHALL NOT BE RESPONSIBLE FOR THE ACCURACY OR COMPLETENESS OF SCANNED COPIES OF THIS PLAN SHEET.

TO ACCOMPANY PLANS DATED 08-31-15

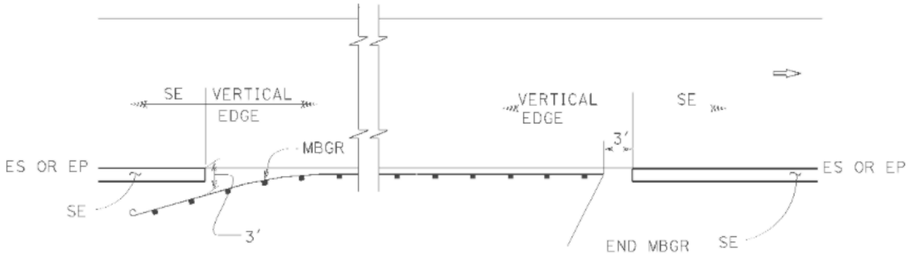

MBGR

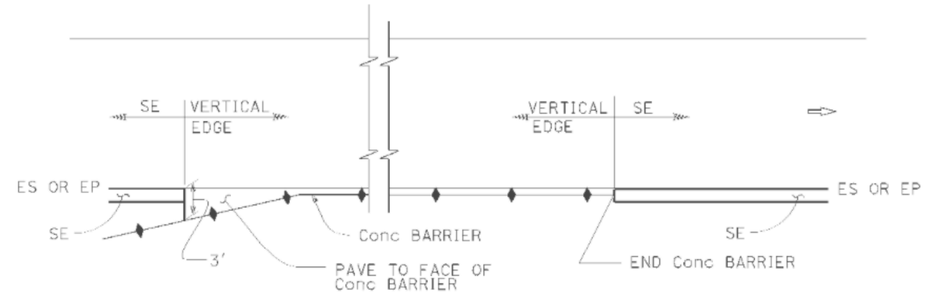

CONCRETE BARRIER

ABBREVIATIONS:

SE SAFETY EDGE

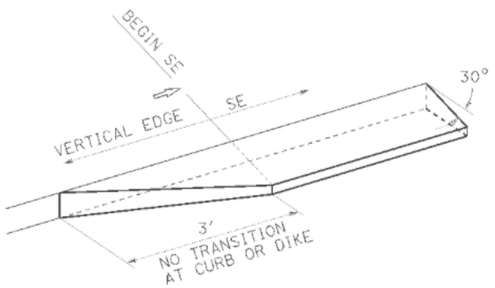

TRANSITION DETAIL FOR CONCRETE ONLY

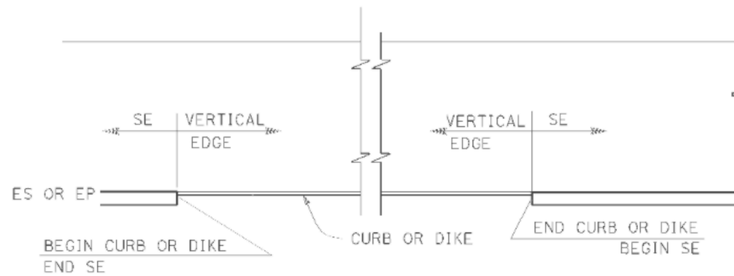

CURB OR DIKE

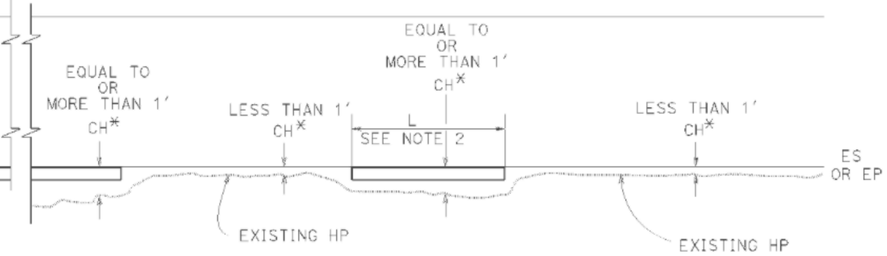

NARROW SIDE SLOPE

* CH = Distance from ES or EP to existing HP.

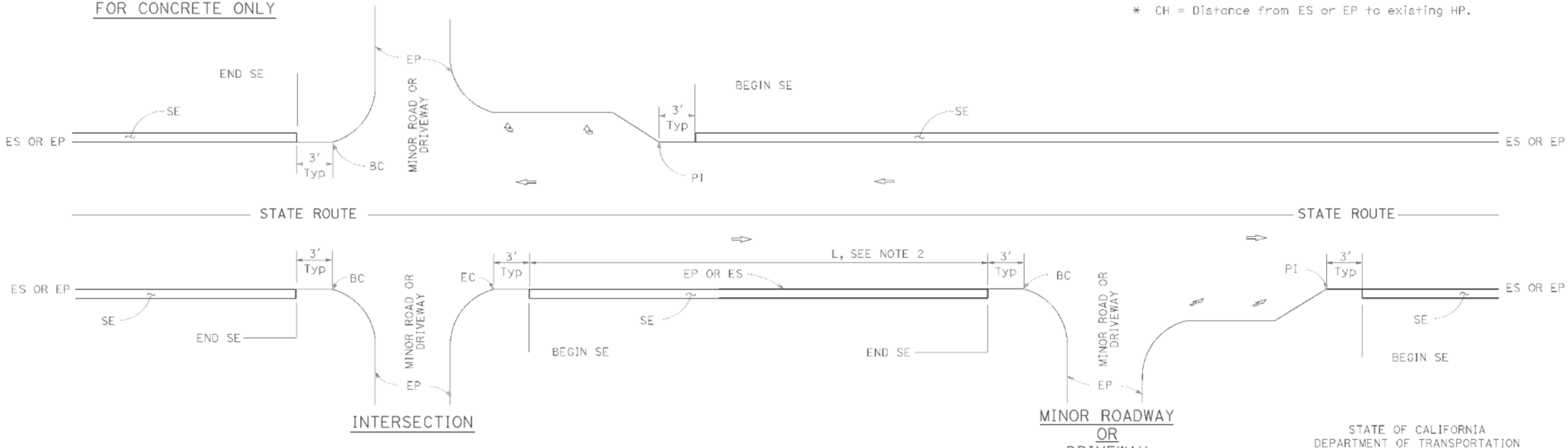

INTERSECTION

MINOR ROADWAY OR DRIVEWAY

DRIVEWAY AND INTERSECTION

NOTES:

1. For details not shown, see Revised Standard Plans RSP P75 and RSP P76.
2. Safety edge is optional when L is less than 30'.

STATE OF CALIFORNIA
DEPARTMENT OF TRANSPORTATION

PAVEMENT EDGE TREATMENTS

NO SCALE

RSP P74 DATED JANUARY 20, 2012 SUPPLEMENTS THE STANDARD PLANS BOOK DATED 2010.

REVISED STANDARD PLAN RSP P74

2010 REVISED STANDARD PLAN RSP P74

DATE PLOTTED => 03-SEP-2015
TIME PLOTTED => 08:57

P:\proj1\02\4E800_plans\pse\24e800va002.dgn

USERNAME => s115152
DGN FILE => 24e800va002.dgn

DIST	COUNTY	ROUTE	POST MILES TOTAL PROJECT	SHEET No.	TOTAL SHEETS
02	Sis	161	2.7/4.5	19	23

REGISTERED CIVIL ENGINEER

January 20, 2012
PLANS APPROVAL DATE

Cornelis M. Hakim No. C55610 Exp. 12-31-12 CIVIL STATE OF CALIFORNIA REGISTERED PROFESSIONAL ENGINEER

THE STATE OF CALIFORNIA OR ITS OFFICERS OR AGENTS SHALL NOT BE RESPONSIBLE FOR THE ACCURACY OR COMPLETENESS OF SCANNED COPIES OF THIS PLAN SHEET.

TO ACCOMPANY PLANS DATED 08-31-15

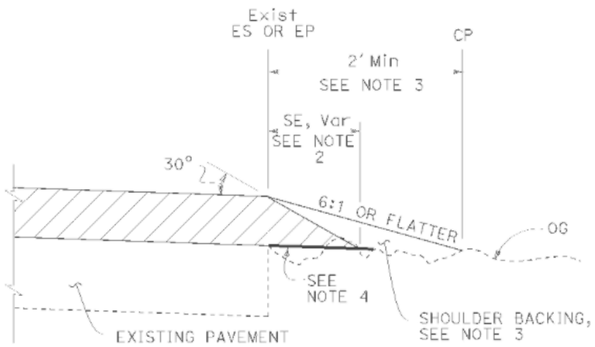

CASE A
Safety Edge

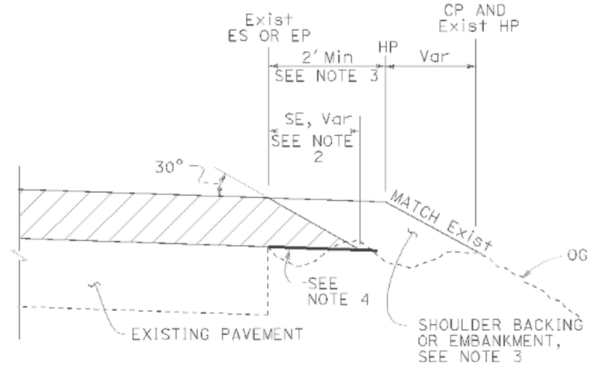

CASE B
Safety Edge

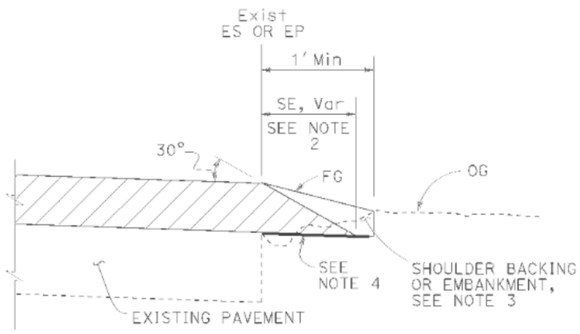

CASE C
Safety Edge

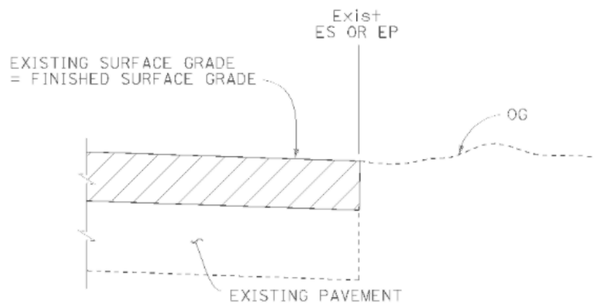

CASE D
Vertical Edge

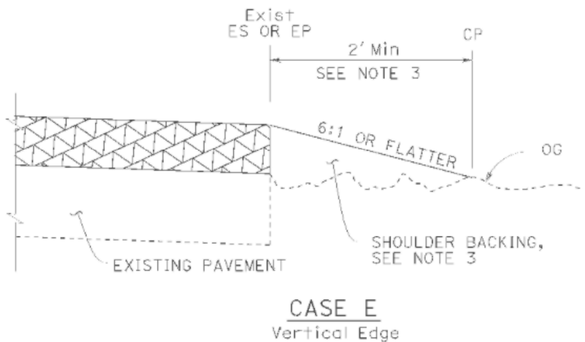

CASE E
Vertical Edge

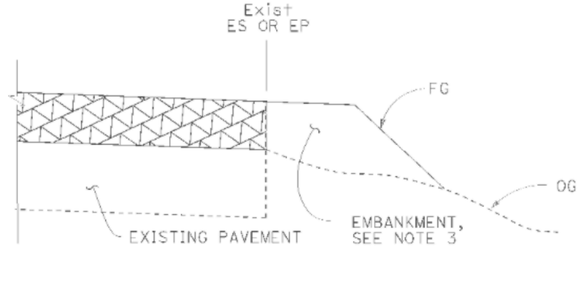

CASE F
Vertical Edge
* See Table A and Revised Std Plan RSP P74

LEGEND:

- HMA OVERLAY
- HMA OR CONCRETE OVERLAY
- CONCRETE OVERLAY

ABBREVIATIONS:

SE SAFETY EDGE
TT TOTAL THICKNESS OF SE

TABLE A
EDGE TREATMENT FOR VARIOUS OVERLAY THICKNESS AND CONDITIONS

	OVERLAY THICKNESS	
FIELD CONDITION	LESS THAN 0.15'	0.15' OR MORE
Exist SLOPE 6:1 OR FLATTER	CASE E	CASE A
Exist SLOPE 3:1 TO 6:1	CASE E	CASE B
Exist SLOPE STEEPER THAN 3:1	CASE F	CASE F
CUT SECTION (REPLACE, COLD PLANE, MILL PAVEMENT)	CASE D	CASE C

ADDITIONAL HMA OR CONCRETE QUANTITIES FOR SE/SIDE/MILE

TYPICAL CROSS SECTION	TT	TOTAL ADDITIONAL MATERIAL FOR SE/SIDE/MILE		
		HMA (TON)	CONCRETE (CY)*	CONCRETE (CY)**
	0.15'	NA	NA	NA
	0.20'	13.7	NA	NA
	0.30'	30.9	NA	NA
	0.40'	54.9	NA	NA
	0.45'	69.4	NA	NA
	0.50'	84.2	NA	NA
	0.60'	113.9	NA	NA
	0.70'	143.6	70.9	94.2
	0.80'	173.3	85.6	112.2
	0.90'	203.0	100.3	130.2
	1.00'	232.7	114.9	148.2
	1.10'	262.4	129.6	166.2
	1.20'	292.1	144.3	184.2

* For Detail "A"
** For Optional Detail "A"

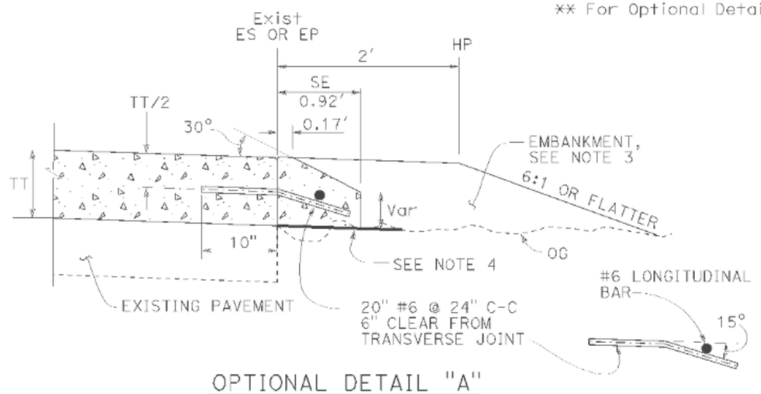

OPTIONAL DETAIL "A"
For concrete overlay
See Note 5

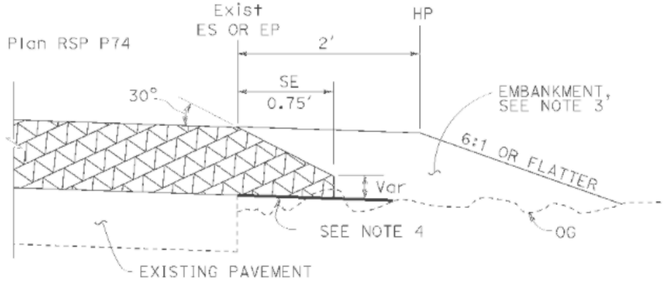

DETAIL "A"
For HMA overlay thickness more than 0.43' or concrete overlay

NOTES:

1. For limits of safety edge and vertical edge treatments, see Revised Standard Plan RSP P74.
2. Details shown for HMA overlay thickness less than 0.43'. See Detail "A" for HMA overlay thickness more than 0.43' or concrete overlay.
3. For locations and limits of shoulder backing or embankment see project plans.
4. Grade existing ground to place safety edge. 1' minimum width
5. Safety edge transverse joint must match overlay transverse joint. End of #6 longitudinal bar must be 2" ±½" clear from transverse joint.
6. Safety edge is not needed in the area of MBGR, barrier, right turn lane and acceleration lane. See Revised Standard Plan RSP P74.

STATE OF CALIFORNIA
DEPARTMENT OF TRANSPORTATION

PAVEMENT EDGE TREATMENTS-OVERLAYS

NO SCALE

RSP P75 DATED JANUARY 20, 2012 SUPPLEMENTS THE STANDARD PLANS BOOK DATED 2010.

REVISED STANDARD PLAN RSP P75

2010 REVISED STANDARD PLAN RSP P75

P:\proj\02\4E800_plans\pse\24e800va003.dgn

USERNAME => s115152
DGN FILE => 24e800va003.dgn

DATE PLOTTED => 03-SEP-2015
TIME PLOTTED => 08:57

DIST	COUNTY	ROUTE	POST MILES TOTAL PROJECT	SHEET No.	TOTAL SHEETS
02	Sis	161	2.7/4.5	20	23

REGISTERED CIVIL ENGINEER

January 20, 2012
PLANS APPROVAL DATE

REGISTERED PROFESSIONAL ENGINEER Cornelis M. Hakim No. C55610 Exp. 12-31-12 CIVIL STATE OF CALIFORNIA

THE STATE OF CALIFORNIA OR ITS OFFICERS OR AGENTS SHALL NOT BE RESPONSIBLE FOR THE ACCURACY OR COMPLETENESS OF SCANNED COPIES OF THIS PLAN SHEET.

TO ACCOMPANY PLANS DATED 08-31-15

LEGEND:

- HMA PAVEMENT
- HMA OR CONCRETE PAVEMENT
- CONCRETE PAVEMENT

ABBREVIATIONS:

SE SAFETY EDGE

TT TOTAL THICKNESS OF SE

HW HINGE WIDTH, DISTANCE FROM ES OR EP TO HP

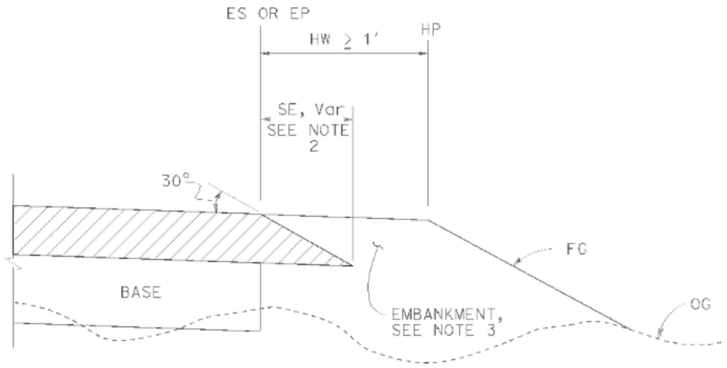

CASE K
Safety Edge - Fill Section, HW ≥ 1'

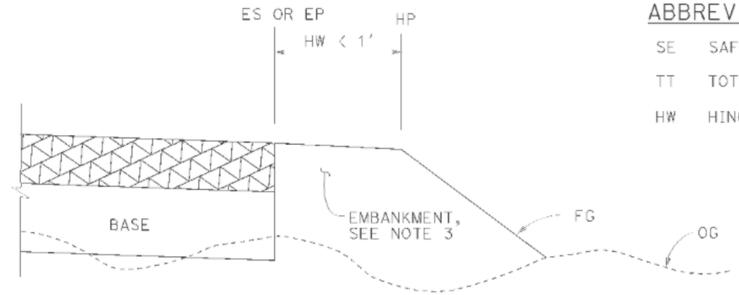

CASE L
Vertical Edge - Fill Section, HW < 1'

FILL SECTION

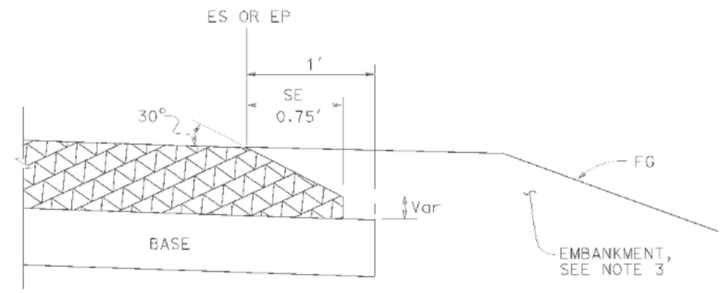

DETAIL "B"
For HMA pavement thickness more than 0.43' or concrete pavement

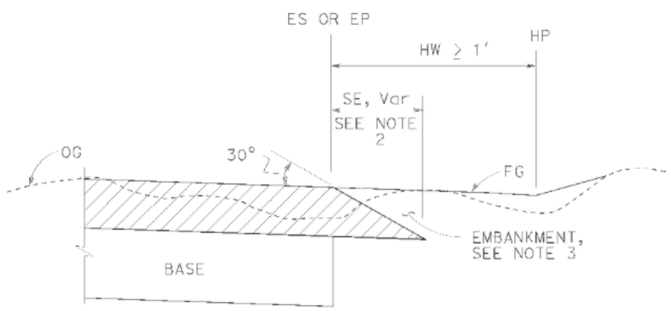

CASE M
Safety Edge - Cut Section, HW ≥ 1'

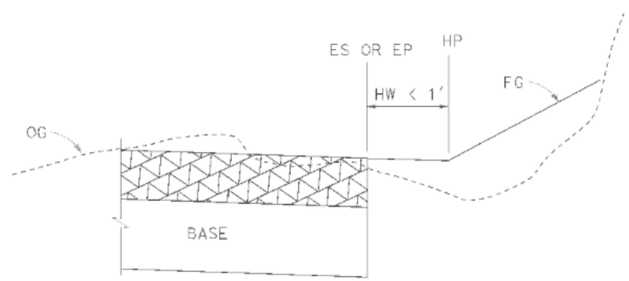

CASE N
Vertical Edge - Cut Section, HW < 1'

CUT SECTION

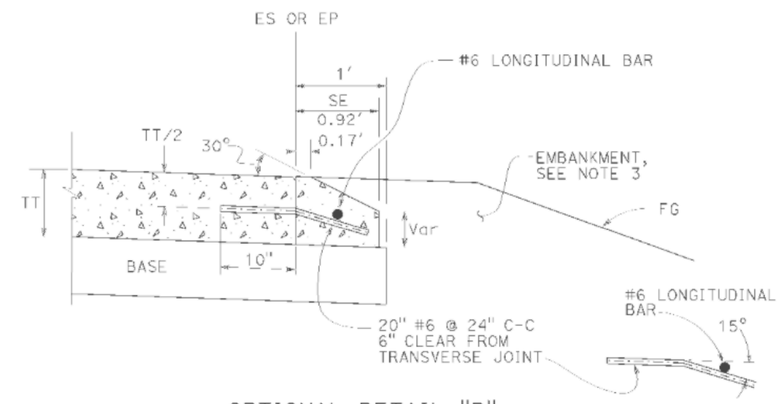

OPTIONAL DETAIL "B"
For concrete pavement
See Note 4

NOTES:

1. For limits of safety edge and vertical edge treatments, see Revised Standard Plan RSP P74
2. Details shown for HMA pavement thickness less than 0.43'. See Detail "B" for HMA pavement thickness more than 0.43' or concrete pavement.
3. For locations and limits of embankment see project plans.
4. Safety edge transverse joint must match pavement transverse joint. End of #6 longitudinal bar must be 2" ±½" clear from transverse joint.
5. Safety edge is not needed in the area of MBGR, barrier, right turn lane and acceleration lane. See Revised Standard Plan RSP P74.

STATE OF CALIFORNIA
DEPARTMENT OF TRANSPORTATION

PAVEMENT EDGE TREATMENTS-NEW CONSTRUCTION

NO SCALE

RSP P76 DATED JANUARY 20, 2012 SUPPLEMENTS THE STANDARD PLANS BOOK DATED 2010.

REVISED STANDARD PLAN RSP P76

2010 REVISED STANDARD PLAN RSP P76

P:\proj1\02\4E800_plans\pse\24e800va004.dgn
USERNAME => s115152
DGN FILE => 24e800va004.dgn
DATE PLOTTED => 03-SEP-2015
TIME PLOTTED => 08:59

DIST	COUNTY	ROUTE	POST MILES TOTAL PROJECT	SHEET No.	TOTAL SHEETS
02	Sis	161	2.7/4.5	21	23

REGISTERED CIVIL ENGINEER

July 19, 2013
PLANS APPROVAL DATE

THE STATE OF CALIFORNIA OR ITS OFFICERS OR AGENTS SHALL NOT BE RESPONSIBLE FOR THE ACCURACY OR COMPLETENESS OF SCANNED COPIES OF THIS PLAN SHEET.

REGISTERED PROFESSIONAL ENGINEER
Gurinderpal Bhullar
No. C48815
Exp. 9-30-14
CIVIL
STATE OF CALIFORNIA

TO ACCOMPANY PLANS DATED 08-31-15

TABLE 1

TAPER LENGTH CRITERIA AND CHANNELIZING DEVICE SPACING

SPEED (S)	MINIMUM TAPER LENGTH * FOR WIDTH OF OFFSET 12 FEET (W)				MAXIMUM CHANNELIZING DEVICE SPACING		
					X	Y	Z **
	TANGENT 2L	MERGING L	SHIFTING L/2	SHOULDER L/3	TAPER	TANGENT	CONFLICT
mph	ft	ft	ft	ft	ft	ft	ft
20	160	80	40	27	20	40	10
25	250	125	63	42	25	50	12
30	360	180	90	60	30	60	15
35	490	245	123	82	35	70	17
40	640	320	160	107	40	80	20
45	1080	540	270	180	45	90	22
50	1200	600	300	200	50	100	25
55	1320	660	330	220	55	110	27
60	1440	720	360	240	60	120	30
65	1560	780	390	260	65	130	32
70	1680	840	420	280	70	140	35

* - For other offsets, use the following merging taper length formula for L:
For speed of 40 mph or less, $L = WS^2/60$
For speed of 45 mph or more, $L = WS$

Where: L = Taper length in feet
W = Width of offset in feet
S = Posted speed limit, off-peak 85th-percentile speed prior to work starting, or the anticipated operating speed in mph

** - Use for taper and tangent sections where there are no pavement markings or where there is a conflict between existing pavement markings and channelizers (CA).

TABLE 2

LONGITUDINAL BUFFER SPACE AND FLAGGER STATION SPACING

SPEED *	Min D **	DOWNGRADE Min D ***		
		-3%	-6%	-9%
mph	ft	ft	ft	ft
20	115	116	120	126
25	155	158	165	173
30	200	205	215	227
35	250	257	271	287
40	305	315	333	354
45	360	378	400	427
50	425	446	474	507
55	495	520	553	593
60	570	598	638	686
65	645	682	728	785
70	730	771	825	891

* - Speed is posted speed limit, off-peak 85th-percentile speed prior to work starting, or the anticipated operating speed in mph

** - Longitudinal buffer space or flagger station spacing

*** - Use on sustained downgrade steeper than -3 percent and longer than 1 mile.

TABLE 3

ADVANCE WARNING SIGN SPACING

ROAD TYPE	DISTANCE BETWEEN SIGNS *		
	A	B	C
	ft	ft	ft
URBAN - 25 mph OR LESS	100	100	100
URBAN - MORE THAN 25 mph TO 40 mph	250	250	250
URBAN - MORE THAN 40 mph	350	350	350
RURAL	500	500	500
EXPRESSWAY / FREEWAY	1000	1500	2640

* - The distances are approximate, are intended for guidance purposes only, and should be applied with engineering judgment. These distances should be adjusted by the Engineer for field conditions, if necessary, by increasing or decreasing the recommmended distances.

STATE OF CALIFORNIA
DEPARTMENT OF TRANSPORTATION

TRAFFIC CONTROL SYSTEM TABLES FOR LANE AND RAMP CLOSURES

NO SCALE

RSP T9 DATED JULY 19, 2013 SUPERSEDES RSP T9 DATED APRIL 19, 2013 THAT SUPPLEMENTS THE STANDARD PLANS BOOK DATED 2010.

REVISED STANDARD PLAN RSP T9

2010 REVISED STANDARD PLAN RSP T9

P:\proj1\02\4E800_plans\pse\24e800va005.dgn

USERNAME => s115152
DGN FILE => 24e800va005.dgn

DATE PLOTTED => 03-SEP-2015
TIME PLOTTED => 08:57

Dist	COUNTY	ROUTE	POST MILES TOTAL PROJECT	SHEET No.	TOTAL SHEETS
02	Sis	161	2.7/4.5	22	23

Devinder Singh
REGISTERED CIVIL ENGINEER

October 17, 2014
PLANS APPROVAL DATE

REGISTERED PROFESSIONAL ENGINEER Devinder Singh No. C50470 Exp. 6-30-15 CIVIL STATE OF CALIFORNIA

THE STATE OF CALIFORNIA OR ITS OFFICERS OR AGENTS SHALL NOT BE RESPONSIBLE FOR THE ACCURACY OR COMPLENESS OF SCANNED COPIES OF THIS PLAN SHEET.

TO ACCOMPANY PLANS DATED 08-31-15

NOTES:

See Revised Standard Plan RSP T9 for tables.

Use cone spacing X for taper segment, Y for tangent segment or Z for conflict situations, as approriate, per Table 1, unless X, Y, or Z cone spacing is shown on this sheet.

Unless otherwise specified in the special provisions, all temporary warning signs shall have black legend on fluorescent orange background.

California codes are designated by (CA). Otherwise, Federal (MUTCD) codes are shown.

TYPICAL LANE CLOSURE WITH REVERSIBLE CONTROL

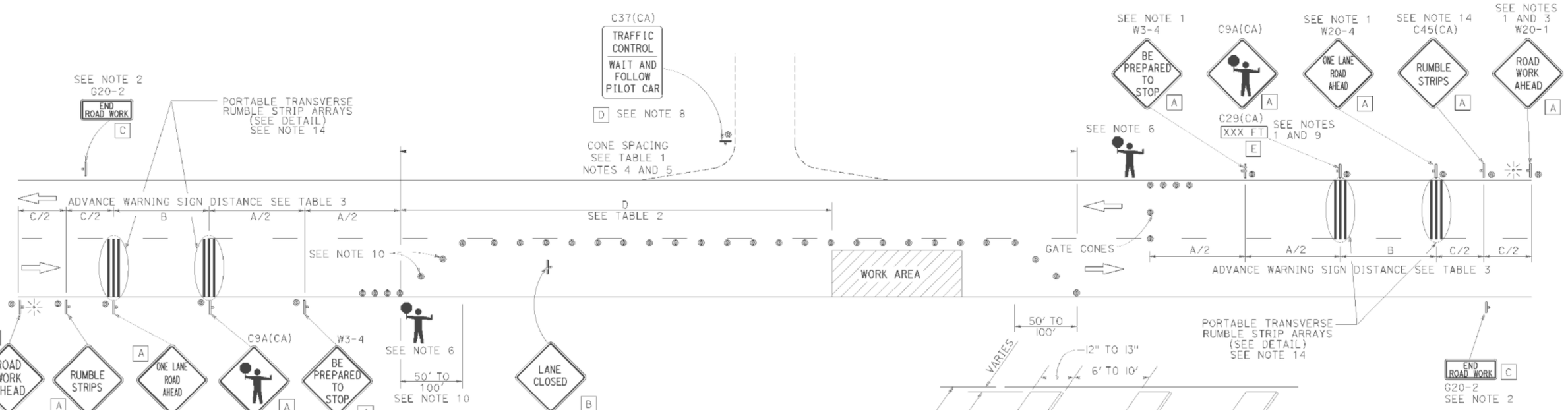

NOTES:

1. Each advance warning sign in each direction of travel shall be equipped with at least two flags for daytime closure. Each flag shall be at least 16" x 16" in size and shall be orange or fluorescent red-orange in color. Flashing beacons shall be placed at the locations indicated for lane closure during hours of darkness.
2. A G20-2 "END ROAD WORK" sign, as appropriate, shall be placed at the end of the lane control unless the end of work area is obvious, or ends within a larger project's limits.
3. If the W20-1 sign would follow within 2000' of a stationary W20-1 or G20-1 "ROAD WORK NEXT _____ MILES", use a W20-4 sign for the first advance warning sign.
4. All cones used for lane closures during the hours of darkness shall be fitted with retroreflective bands (or sleeves) as specified in the specifications.
5. Portable delineators, placed at one-half the spacing indicated for traffic cones, may be used instead of cones for daytime closures only.
6. Additional advance flaggers may be required. Flagger should stand in a conspicuous place, be visible to approaching traffic as well as approaching vehicles after the first vehicle has stopped. During the hours of darkness, the flagging-station and flagger shall be illuminated and clearly visible to approaching traffic. The illumination footprint of the lighting on the ground shall be at least 20' in diameter. Place a minimum of four cones at 50' intervals in advance of flagger station as shown.
7. Place C30(CA) "LANE CLOSED" sign at 500' to 1000' intervals throughout extended work areas. They are optional if the work area is visible from the flagger station.
8. When a pilot car is used, place a C37(CA) "TRAFFIC CONTROL-WAIT AND FOLLOW PILOT CAR" sign with black legend on white background at all intersections, driveways and alleys without a flagger within traffic control area. Signs shall be clean and visible at all times. Where traffic can not be effectively self-regulated, at least one flagger shall be used at each intersection within traffic control area.
9. An optional C29(CA) sign may be placed below the C9A(CA) sign.
10. Either traffic cones or barricades shall be placed on the taper. Barricades shall be Type I, II, or III.
11. The color of the portable transverse rumble strips shall be black or orange. Use 2 arrays, each array shall consist of 3 rumble strips.
12. Portable transverse rumble strips shall not be placed on sharp horizontal or vertical curves nor shall they be placed through pedestrian crossings.
13. If the portable transverse rumble strips become out of alignment (skewed) by more than 6 inches, measured from one end to the other, they shall be readjusted to bring the placement back to the original location.
14. Portable transverse rumble strips are not required if any one of the following conditions is satisfied:
    A. Work duration occupies a location for four hours or less
    B. Posted speed limit is below 45 MPH
    C. Work is of emergency nature
    D. Work zone is in snow or icy weather conditions

PORTABLE TRANSVERSE RUMBLE STRIP ARRAY DETAIL

LEGEND

- TRAFFIC CONE
- TEMPORARY TRAFFIC CONTROL SIGN
- PORTABLE FLASHING BEACON
- FLAGGER

SIGN PANEL SIZE (Min)

A	48" x 48"
B	30" x 30"
C	36" x 18"
D	36" x 42"
E	20" x 7"

STATE OF CALIFORNIA
DEPARTMENT OF TRANSPORTATION

TRAFFIC CONTROL SYSTEM FOR LANE CLOSURE ON TWO LANE CONVENTIONAL HIGHWAYS

NO SCALE

RSP T13 DATED OCTOBER 17, 2014 SUPERSEDES RSP T13 DATED JULY 18, 2014 AND RSP T13 DATED APRIL 19, 2013 AND STANDARD PLAN T13 DATED MAY 20, 2011 - PAGE 241 OF THE STANDARD PLANS BOOK DATED 2010.

REVISED STANDARD PLAN RSP T13

2010 REVISED STANDARD PLAN RSP T13

P:\proj1\02\4E800_plans\pse\24e800va006.dgn

USERNAME => s115152
DGN FILE => 24e800va006.dgn

DATE PLOTTED => 03-SEP-2015
TIME PLOTTED => 08:57

DIST	COUNTY	ROUTE	POST MILES TOTAL PROJECT	SHEET No.	TOTAL SHEETS
02	Sis	161	2.7/4.5	23	23

REGISTERED CIVIL ENGINEER

April 19, 2013
PLANS APPROVAL DATE

REGISTERED PROFESSIONAL ENGINEER Gurinderpal Bhullar No. C48815 Exp. 9-30-14 CIVIL STATE OF CALIFORNIA

THE STATE OF CALIFORNIA OR ITS OFFICERS OR AGENTS SHALL NOT BE RESPONSIBLE FOR THE ACCURACY OR COMPLETENESS OF SCANNED COPIES OF THIS PLAN SHEET.

TO ACCOMPANY PLANS DATED 08-31-15

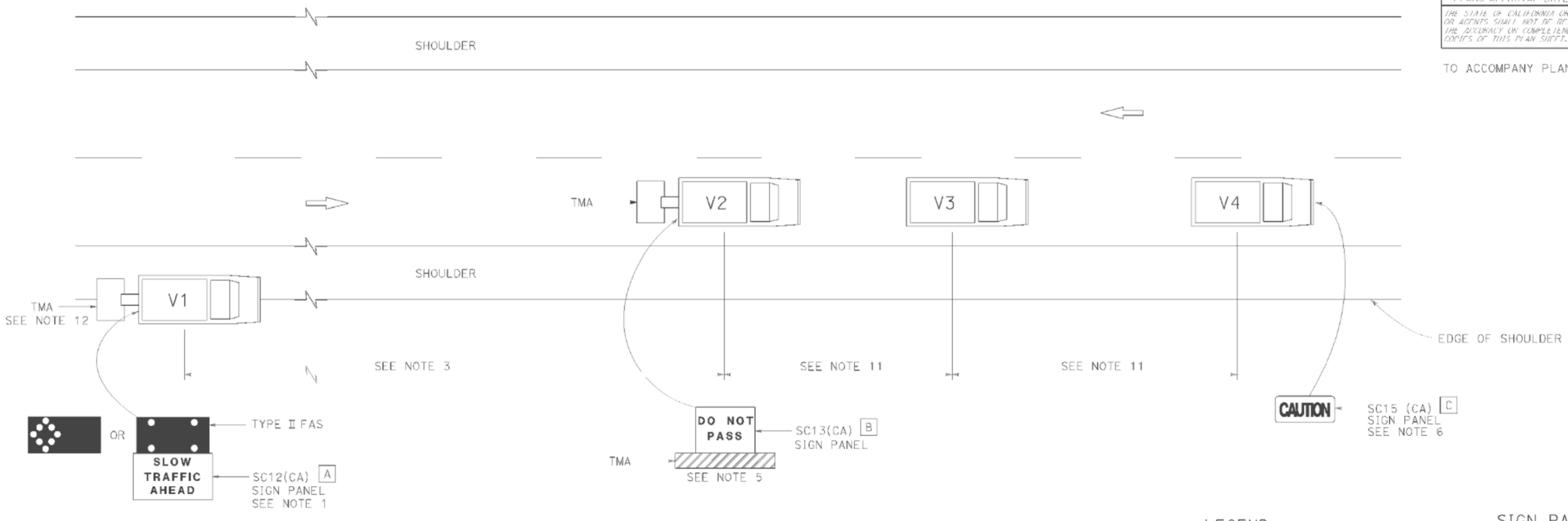

LEGEND

V1	SIGN VEHICLE
V2	SHADOW VEHICLE
V3	WORK/APPLICATION VEHICLE
V4	SIGN VEHICLE
TMA	TRUCK-MOUNTED ATTENUATOR
	FLASHING ARROW SIGN (FAS) IN FLASHING CAUTION MODE
	FLASHING ARROW SIGN (FAS) IN ALTERNATING DIAMOND CAUTION

SIGN PANEL SIZE (Min)

A	72" × 42"
B	54" × 42"
C	54" × 24"

NOTES:

1. Either a changeable message sign or a SC12(CA) "SLOW TRAFFIC AHEAD" sign shall be mounted on the rear of sign vehicle V1. The changeable message sign shall be sequenced to show the "CAUTION" message first, follow by the "SLOW TRAFFIC AHEAD" message. A Type II flashing arrow sign may be used with the SC12(CA) sign panel.
2. Sign vehicle V1 should be positioned where highly visible when shoulders are not available.
3. If traffic queues develop, sign vehicle V1 should be positioned upstream from the end of queue.
4. Vehicle-mounted sign panels shall have Type III or above retroreflective sheeting, black on white, or black on fluorescent orange, with 6" minimum series D letters per Caltrans sign specifications.
5. Shadow vehicle shall be equipped with a truck-mounted attenuator. The sign panel shown shall be mounted on the rear of shadow vehicle V2. The message "LANE CLOSED" may be used in place of the "DO NOT PASS" message.
6. The sign panel shown shall be mounted on the front of sign vehicle V4, facing opposing traffic.
7. All vehicles shall be equipped with flashing or rotating amber lights.
8. Sign vehicle V4 will not be required when the work and vehicles V2 and V3 are 2' or more from the centerline of the highway during the work or application operations.
9. All vehicles used for lane closures shall be equipped with two-way radios and the vehicle operators shall maintain communication during the work or application operation.
10. This plan shall not be used where workers would be on foot in the work area. Use a stationary type lane closure (Revised Standard Plan T13) for this condition.
11. Minimize spacing between vehicles V2 and V3 and vehicles V3 and V4 to deter road users from driving in between them.
12. If sign vehicle V1 encroaches into the traffic lane due to insufficient shoulder width, sign vehicle V1 shall be equipped with a truck-mounted attenuator. Sign vehicle V1 shall stay as close to the edge of shoulder as practicable.

STATE OF CALIFORNIA
DEPARTMENT OF TRANSPORTATION

TRAFFIC CONTROL SYSTEM FOR MOVING LANE CLOSURE ON TWO LANE HIGHWAYS

NO SCALE

RSP T17 DATED APRIL 19, 2013 SUPERSEDES STANDARD PLAN T17
DATED MAY 20, 2011 - PAGE 245 OF THE STANDARD PLANS BOOK DATED 2010.

REVISED STANDARD PLAN RSP T17

2010 REVISED STANDARD PLAN RSP T17

P:\proj1\02\4E800_plans\pse\24e800va007.dgn

USERNAME => s115152
DGN FILE => 24e800va007.dgn

DATE PLOTTED => 03-SEP-2015
TIME PLOTTED => 08:57