Dist	COUNTY	ROUTE	POST MILES TOTAL PROJECT	SHEET No.	TOTAL SHEETS
02	Mod	139	R10.7/28.0	101	149

REGISTERED CIVIL ENGINEER 06-15-15 DATE

06-15-15
PLANS APPROVAL DATE

REGISTERED PROFESSIONAL ENGINEER
AUSTIN V. BUIST
No. C77412
Exp. 6-30-17
CIVIL
STATE OF CALIFORNIA

THE STATE OF CALIFORNIA OR ITS OFFICERS OR AGENTS SHALL NOT BE RESPONSIBLE FOR THE ACCURACY OR COMPLETENESS OF SCANNED COPIES OF THIS PLAN SHEET.

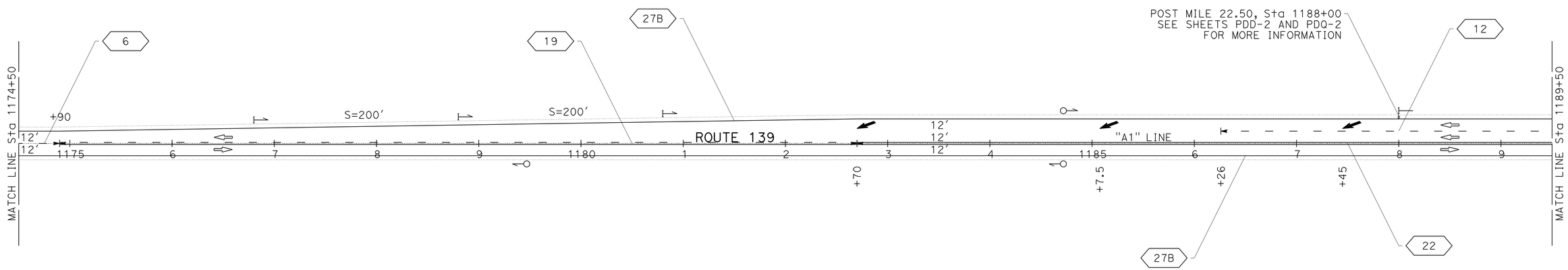

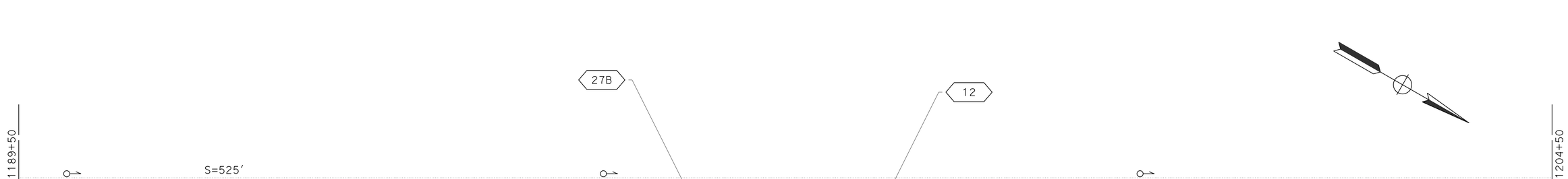

APPROVED FOR PAVEMENT DELINEATION AND SIGN WORK ONLY

PAVEMENT DELINEATION AND SIGN PLAN

SCALE: 1" = 50′

PD-21

REVISED BY	DATE REVISED
AUSTIN BUIST	TOBY CRAWFORD
CALCULATED-DESIGNED BY	CHECKED BY
FUNCTIONAL SUPERVISOR	STEVE TOPAL

STATE OF CALIFORNIA - DEPARTMENT OF TRANSPORTATION
Caltrans
DESIGN

P:\proj1\02\4E440_plans\pse\24e440na021.dgn

LAST REVISION 06-05-15 | DATE PLOTTED => 24-JUN-2015 | TIME PLOTTED => 11:21

Dist	COUNTY	ROUTE	POST MILES TOTAL PROJECT	SHEET No.	TOTAL SHEETS
02	Mod	139	R10.7/28.0	102	149

REGISTERED CIVIL ENGINEER 06-15-15 DATE

06-15-15
PLANS APPROVAL DATE

REGISTERED PROFESSIONAL ENGINEER
AUSTIN V. BUIST
No. C77412
Exp. 6-30-17
CIVIL
STATE OF CALIFORNIA

THE STATE OF CALIFORNIA OR ITS OFFICERS OR AGENTS SHALL NOT BE RESPONSIBLE FOR THE ACCURACY OR COMPLETENESS OF SCANNED COPIES OF THIS PLAN SHEET.

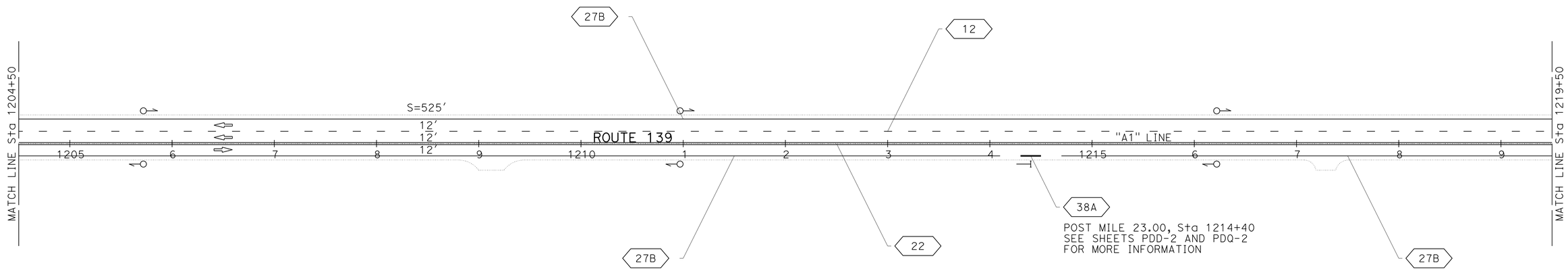

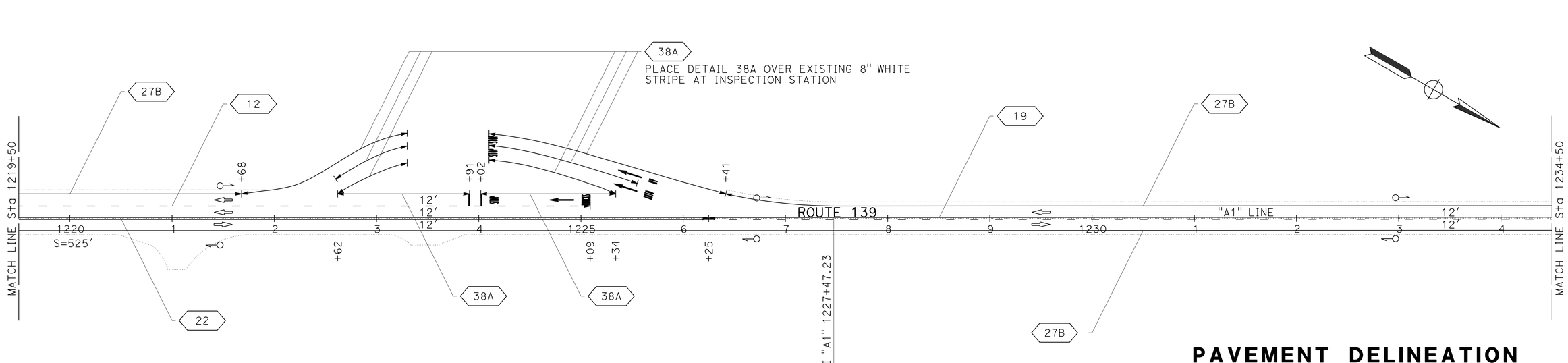

APPROVED FOR PAVEMENT DELINEATION AND SIGN WORK ONLY

PAVEMENT DELINEATION AND SIGN PLAN

SCALE: 1" = 50'

PD-22

REVISED BY | DATE REVISED
AUSTIN BUIST | TOBY CRAWFORD
CALCULATED-DESIGNED BY | CHECKED BY
FUNCTIONAL SUPERVISOR | STEVE TOPAL

STATE OF CALIFORNIA - DEPARTMENT OF TRANSPORTATION
Caltrans
DESIGN

P:\proj1\02\4E440_plans\pse\24e440na022.dgn

LAST REVISION 01-27-15 | DATE PLOTTED => 24-JUN-2015 | TIME PLOTTED => 11:21

Dist	COUNTY	ROUTE	POST MILES TOTAL PROJECT	SHEET No.	TOTAL SHEETS
02	Mod	139	R10.7/28.0	103	149

06-15-15
REGISTERED CIVIL ENGINEER DATE

06-15-15
PLANS APPROVAL DATE

REGISTERED PROFESSIONAL ENGINEER
AUSTIN V. BUIST
No. C77412
Exp. 6-30-17
CIVIL
STATE OF CALIFORNIA

THE STATE OF CALIFORNIA OR ITS OFFICERS OR AGENTS SHALL NOT BE RESPONSIBLE FOR THE ACCURACY OR COMPLETENESS OF SCANNED COPIES OF THIS PLAN SHEET.

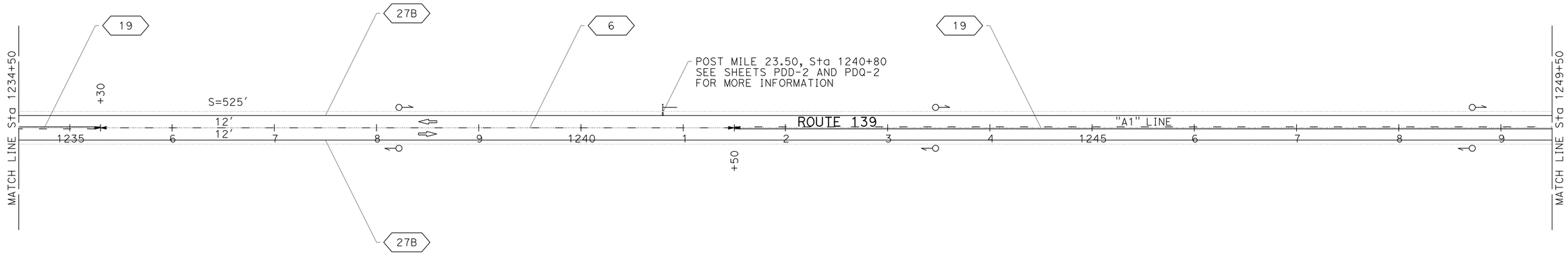

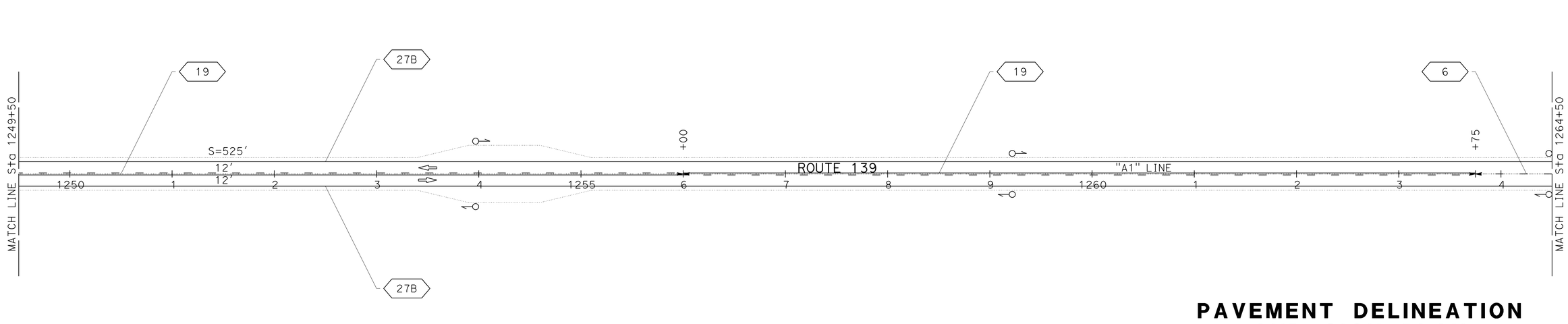

APPROVED FOR PAVEMENT DELINEATION AND SIGN WORK ONLY

PAVEMENT DELINEATION AND SIGN PLAN

SCALE: 1" = 50'

PD-23

REVISED BY	DATE REVISED

CALCULATED-DESIGNED BY: AUSTIN BUIST
CHECKED BY: TOBY CRAWFORD
FUNCTIONAL SUPERVISOR: STEVE TOPAL

STATE OF CALIFORNIA - DEPARTMENT OF TRANSPORTATION
Caltrans
DESIGN

P:\proj1\02\4E440_plans\pse\24e440na023.dgn

LAST REVISION 01-27-15
DATE PLOTTED => 24-JUN-2015
TIME PLOTTED => 11:21

Dist	COUNTY	ROUTE	POST MILES TOTAL PROJECT	SHEET No.	TOTAL SHEETS
02	Mod	139	R10.7/28.0	104	149

REGISTERED CIVIL ENGINEER 06-15-15 DATE

06-15-15
PLANS APPROVAL DATE

REGISTERED PROFESSIONAL ENGINEER
AUSTIN V. BUIST
No. C77412
Exp. 6-30-17
CIVIL
STATE OF CALIFORNIA

THE STATE OF CALIFORNIA OR ITS OFFICERS OR AGENTS SHALL NOT BE RESPONSIBLE FOR THE ACCURACY OR COMPLETENESS OF SCANNED COPIES OF THIS PLAN SHEET.

NOTE:

1. SEE PAVEMENT DELINEATION QUANTITIES PDQ-1 FOR LIMIT LINE DIMENSIONS.

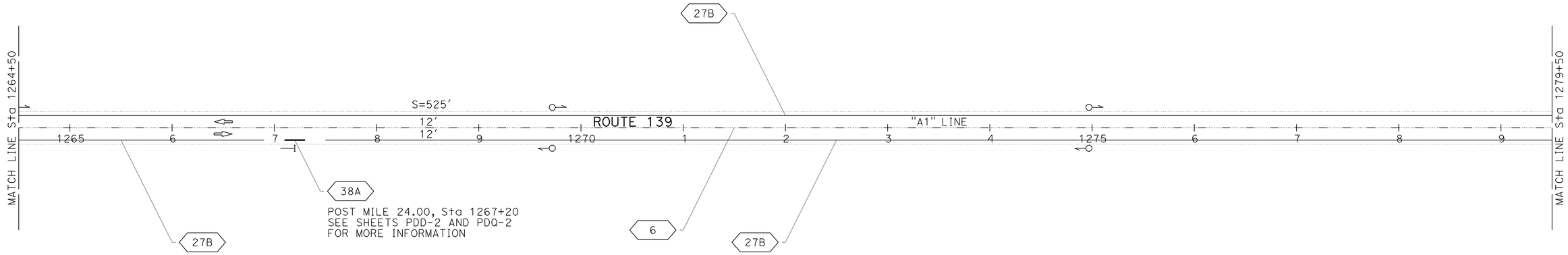

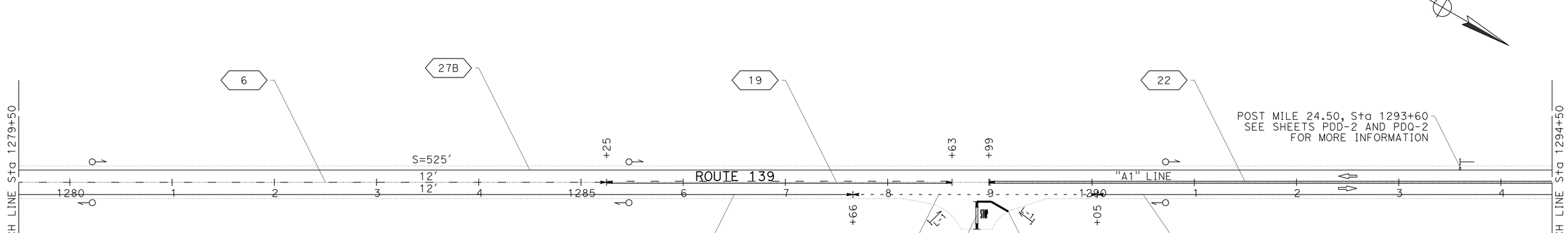

APPROVED FOR PAVEMENT DELINEATION AND SIGN WORK ONLY

PAVEMENT DELINEATION AND SIGN PLAN

SCALE: 1" = 50'

PD-24

REVISED BY	DATE REVISED

AUSTIN BUIST — TOBY CRAWFORD

CALCULATED-DESIGNED BY — CHECKED BY

FUNCTIONAL SUPERVISOR: STEVE TOPAL

STATE OF CALIFORNIA - DEPARTMENT OF TRANSPORTATION

Caltrans® DESIGN

P:\proj1\02\4E440_plans\pse\24e440na024.dgn

LAST REVISION 01-27-15 | DATE PLOTTED => 24-JUN-2015 | TIME PLOTTED => 11:21

Dist	COUNTY	ROUTE	POST MILES TOTAL PROJECT	SHEET No.	TOTAL SHEETS
02	Mod	139	R10.7/28.0	105	149

REGISTERED CIVIL ENGINEER 06-15-15 DATE

06-15-15
PLANS APPROVAL DATE

REGISTERED PROFESSIONAL ENGINEER
AUSTIN V. BUIST
No. C77412
Exp. 6-30-17
CIVIL
STATE OF CALIFORNIA

THE STATE OF CALIFORNIA OR ITS OFFICERS OR AGENTS SHALL NOT BE RESPONSIBLE FOR THE ACCURACY OR COMPLETENESS OF SCANNED COPIES OF THIS PLAN SHEET.

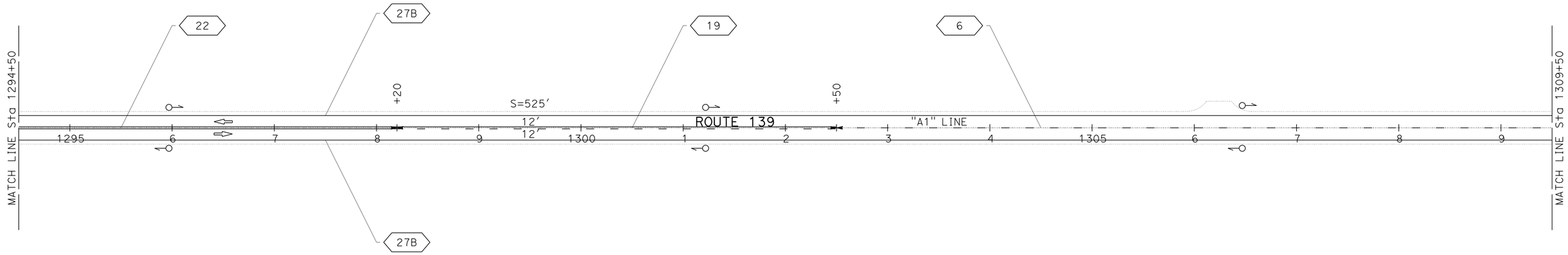

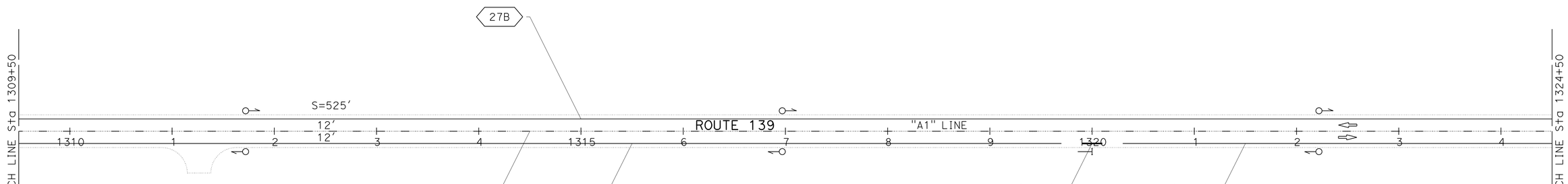

APPROVED FOR PAVEMENT DELINEATION AND SIGN WORK ONLY

PAVEMENT DELINEATION AND SIGN PLAN

SCALE: 1" = 50'

PD-25

REVISED BY	DATE REVISED
AUSTIN BUIST	TOBY CRAWFORD
CALCULATED-DESIGNED BY	CHECKED BY
FUNCTIONAL SUPERVISOR	STEVE TOPAL

STATE OF CALIFORNIA - DEPARTMENT OF TRANSPORTATION
Caltrans
DESIGN

P:\proj1\02\4E440_plans\pse\24e440na025.dgn

LAST REVISION 01-27-15 | DATE PLOTTED => 24-JUN-2015 | TIME PLOTTED => 11:21

Dist	COUNTY	ROUTE	POST MILES TOTAL PROJECT	SHEET No.	TOTAL SHEETS
02	Mod	139	R10.7/28.0	106	149

06-15-15
REGISTERED CIVIL ENGINEER DATE

06-15-15
PLANS APPROVAL DATE

REGISTERED PROFESSIONAL ENGINEER
AUSTIN V. BUIST
No. C77412
Exp. 6-30-17
CIVIL
STATE OF CALIFORNIA

THE STATE OF CALIFORNIA OR ITS OFFICERS OR AGENTS SHALL NOT BE RESPONSIBLE FOR THE ACCURACY OR COMPLETENESS OF SCANNED COPIES OF THIS PLAN SHEET.

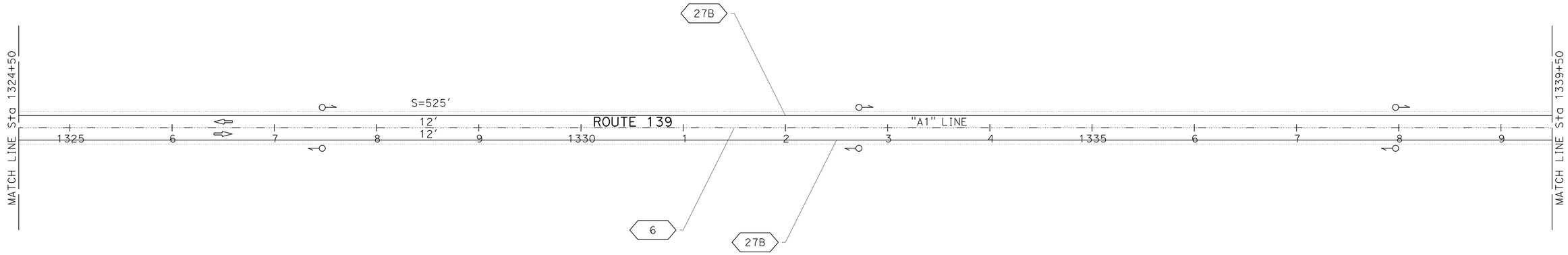

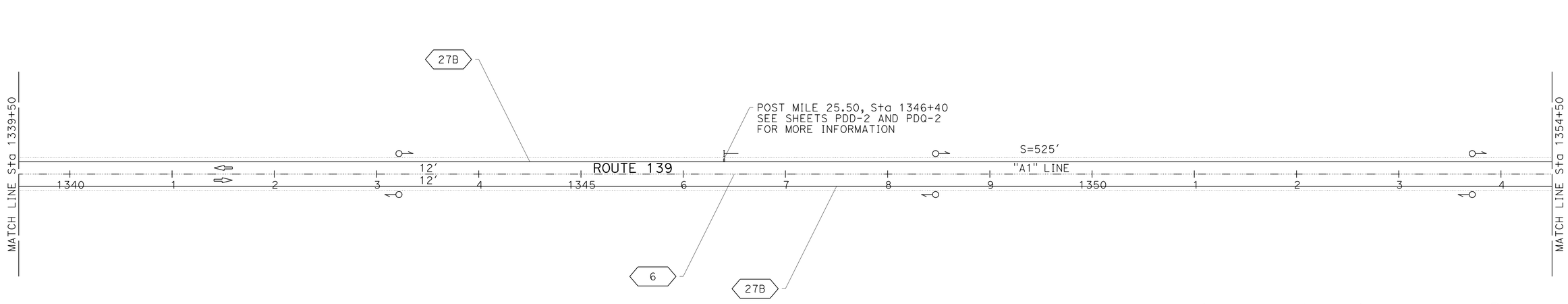

APPROVED FOR PAVEMENT DELINEATION AND SIGN WORK ONLY

PAVEMENT DELINEATION AND SIGN PLAN

SCALE: 1" = 50'

PD-26

REVISED BY	DATE REVISED

AUSTIN BUIST — TOBY CRAWFORD

CALCULATED-DESIGNED BY — CHECKED BY

FUNCTIONAL SUPERVISOR — STEVE TOPAL

STATE OF CALIFORNIA - DEPARTMENT OF TRANSPORTATION
Caltrans® DESIGN

P:\proj1\02\4E440_plans\pse\24e440na026.dgn

LAST REVISION 01-27-15 | DATE PLOTTED => 24-JUN-2015 | TIME PLOTTED => 11:21

Dist	COUNTY	ROUTE	POST MILES TOTAL PROJECT	SHEET No.	TOTAL SHEETS
02	Mod	139	R10.7/28.0	107	149

06-15-15
REGISTERED CIVIL ENGINEER DATE

06-15-15
PLANS APPROVAL DATE

REGISTERED PROFESSIONAL ENGINEER
AUSTIN V. BUIST
No. C77412
Exp. 6-30-17
CIVIL
STATE OF CALIFORNIA

THE STATE OF CALIFORNIA OR ITS OFFICERS OR AGENTS SHALL NOT BE RESPONSIBLE FOR THE ACCURACY OR COMPLETENESS OF SCANNED COPIES OF THIS PLAN SHEET.

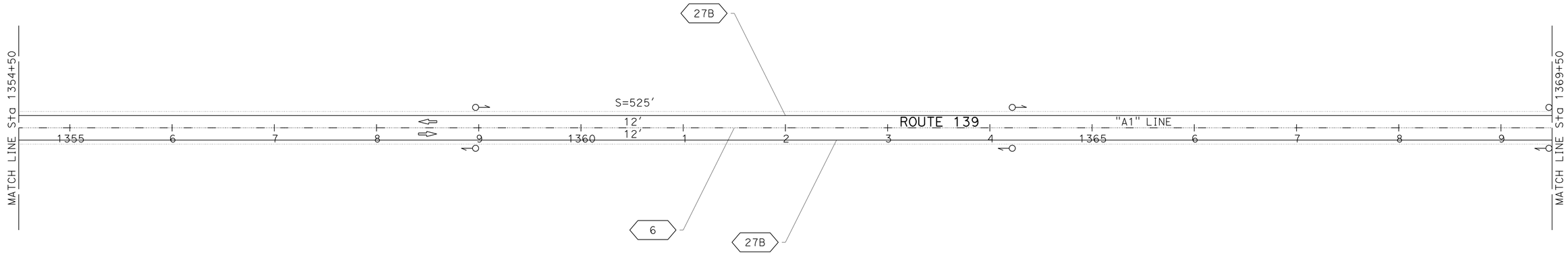

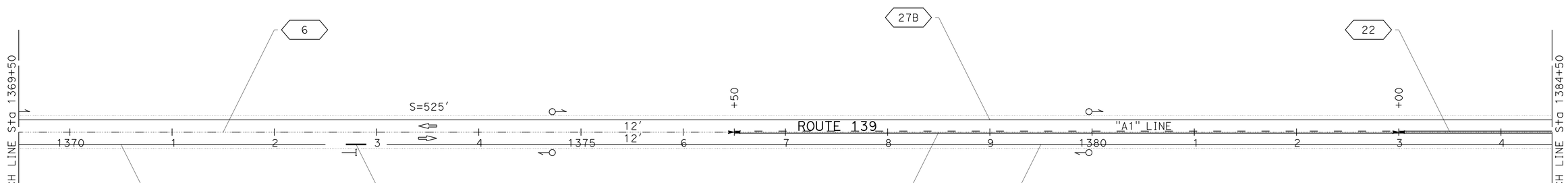

APPROVED FOR PAVEMENT DELINEATION AND SIGN WORK ONLY

PAVEMENT DELINEATION AND SIGN PLAN

SCALE: 1" = 50'

PD-27

REVISED BY	DATE REVISED

AUSTIN BUIST — CALCULATED-DESIGNED BY
TOBY CRAWFORD — CHECKED BY
STEVE TOPAL — FUNCTIONAL SUPERVISOR

STATE OF CALIFORNIA - DEPARTMENT OF TRANSPORTATION
Caltrans
DESIGN

P:\proj1\02\4E440_plans\pse\24e440na027.dgn

LAST REVISION 01-27-15 | DATE PLOTTED => 24-JUN-2015 | TIME PLOTTED => 11:21

Dist	COUNTY	ROUTE	POST MILES TOTAL PROJECT	SHEET No.	TOTAL SHEETS
02	Mod	139	R10.7/28.0	108	149

REGISTERED CIVIL ENGINEER 06-15-15 DATE

06-15-15
PLANS APPROVAL DATE

REGISTERED PROFESSIONAL ENGINEER
AUSTIN V. BUIST
No. C77412
Exp. 6-30-17
CIVIL
STATE OF CALIFORNIA

THE STATE OF CALIFORNIA OR ITS OFFICERS OR AGENTS SHALL NOT BE RESPONSIBLE FOR THE ACCURACY OR COMPLETENESS OF SCANNED COPIES OF THIS PLAN SHEET.

NOTE:

1. SEE PAVEMENT DELINEATION QUANTITIES PDQ-1 FOR LIMIT LINE DIMENSIONS.

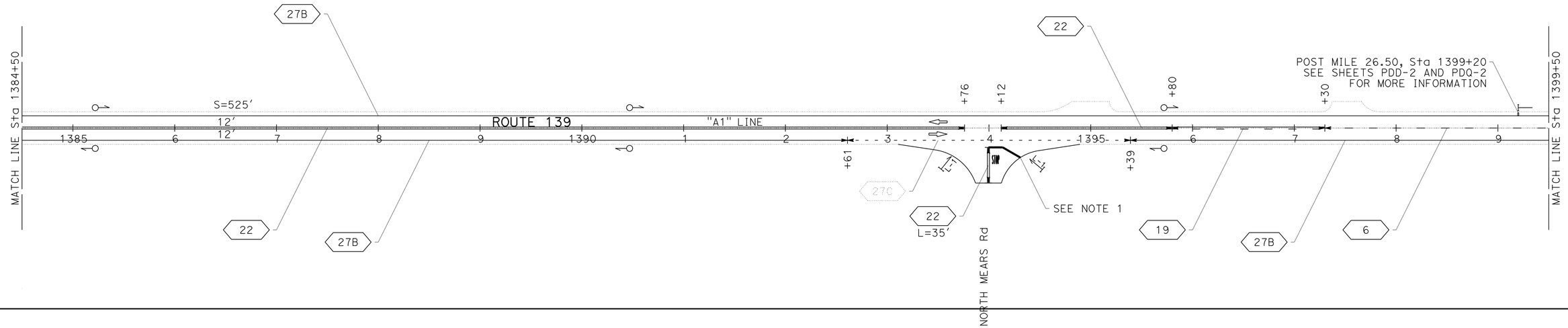

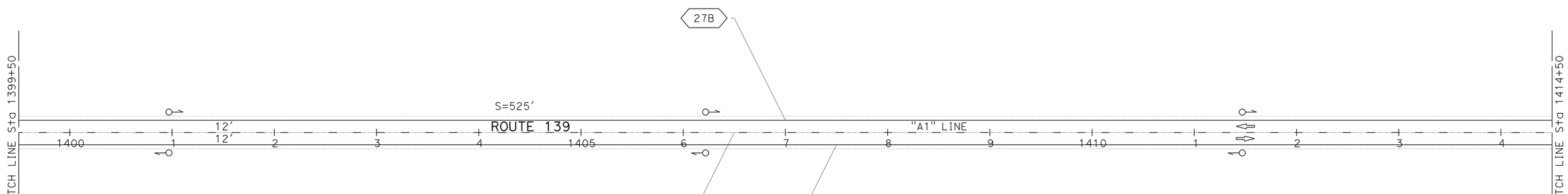

APPROVED FOR PAVEMENT DELINEATION AND SIGN WORK ONLY

PAVEMENT DELINEATION AND SIGN PLAN

SCALE: 1" = 50'

PD-28

REVISED BY	DATE REVISED

AUSTIN BUIST — TOBY CRAWFORD

CALCULATED-DESIGNED BY — CHECKED BY

FUNCTIONAL SUPERVISOR — STEVE TOPAL

STATE OF CALIFORNIA - DEPARTMENT OF TRANSPORTATION
Caltrans
DESIGN

P:\proj1\02\4E440_plans\pse\24e440na028.dgn

LAST REVISION 01-27-15 | DATE PLOTTED => 24-JUN-2015 | TIME PLOTTED => 11:21

BORDER LAST REVISED 7/2/2010 | USERNAME => s115152 | DGN FILE => 24e440na028.dgn | RELATIVE BORDER SCALE IS IN INCHES 0 1 2 3 | UNIT 0319 | PROJECT NUMBER & PHASE 02-0002-0285-1 | EA 02-4E4401

Dist	COUNTY	ROUTE	POST MILES TOTAL PROJECT	SHEET No.	TOTAL SHEETS
02	Mod	139	R10.7/28.0	109	149

REGISTERED CIVIL ENGINEER 06-15-15 DATE

06-15-15
PLANS APPROVAL DATE

REGISTERED PROFESSIONAL ENGINEER
AUSTIN V. BUIST
No. C77412
Exp. 6-30-17
CIVIL
STATE OF CALIFORNIA

THE STATE OF CALIFORNIA OR ITS OFFICERS OR AGENTS SHALL NOT BE RESPONSIBLE FOR THE ACCURACY OR COMPLETENESS OF SCANNED COPIES OF THIS PLAN SHEET.

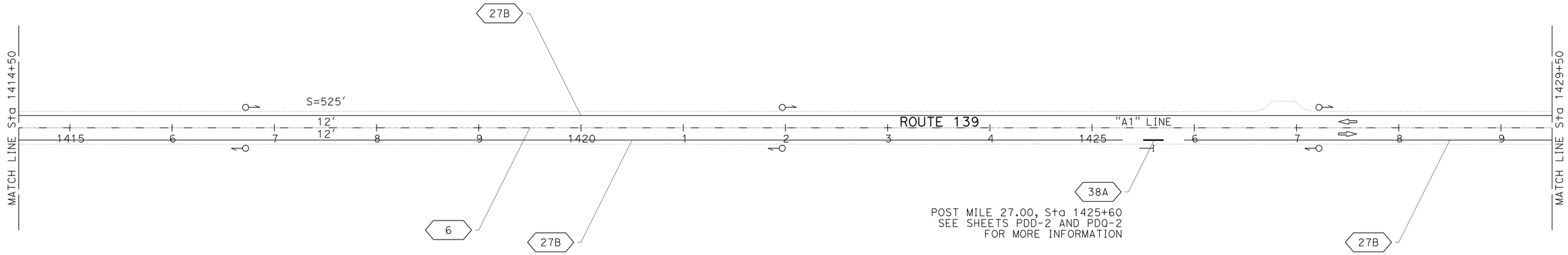

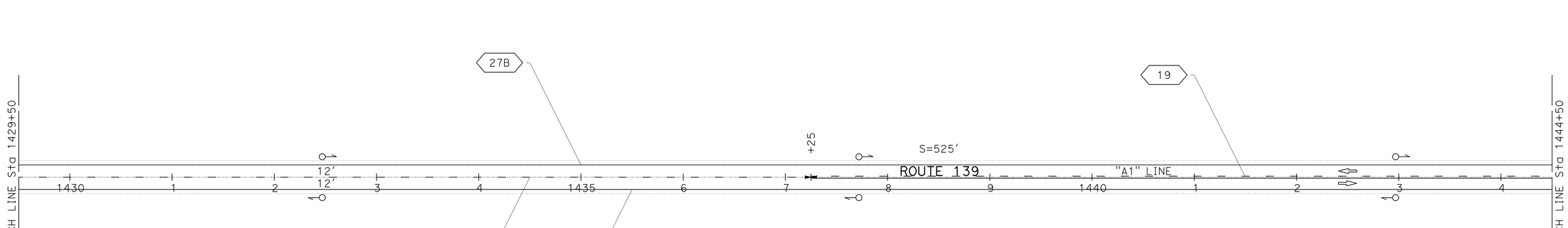

APPROVED FOR PAVEMENT DELINEATION AND SIGN WORK ONLY

PAVEMENT DELINEATION AND SIGN PLAN

SCALE: 1" = 50′

PD-29

REVISED BY	DATE REVISED

CALCULATED-DESIGNED BY: AUSTIN BUIST
CHECKED BY: TOBY CRAWFORD

FUNCTIONAL SUPERVISOR: STEVE TOPAL

STATE OF CALIFORNIA - DEPARTMENT OF TRANSPORTATION
Caltrans
DESIGN

P:\proj1\02\4E440_plans\pse\24e440na029.dgn

LAST REVISION 01-27-15
DATE PLOTTED => 24-JUN-2015
TIME PLOTTED => 11:21

Dist	COUNTY	ROUTE	POST MILES TOTAL PROJECT	SHEET No.	TOTAL SHEETS
02	Mod	139	R10.7/28.0	110	149

REGISTERED CIVIL ENGINEER 06-15-15 DATE

06-15-15
PLANS APPROVAL DATE

REGISTERED PROFESSIONAL ENGINEER
AUSTIN V. BUIST
No. C77412
Exp. 6-30-17
CIVIL
STATE OF CALIFORNIA

THE STATE OF CALIFORNIA OR ITS OFFICERS OR AGENTS SHALL NOT BE RESPONSIBLE FOR THE ACCURACY OR COMPLETENESS OF SCANNED COPIES OF THIS PLAN SHEET.

NOTE:

1. SEE PAVEMENT DELINEATION QUANTITIES PDQ-1 FOR LIMIT LINE DIMENSIONS.

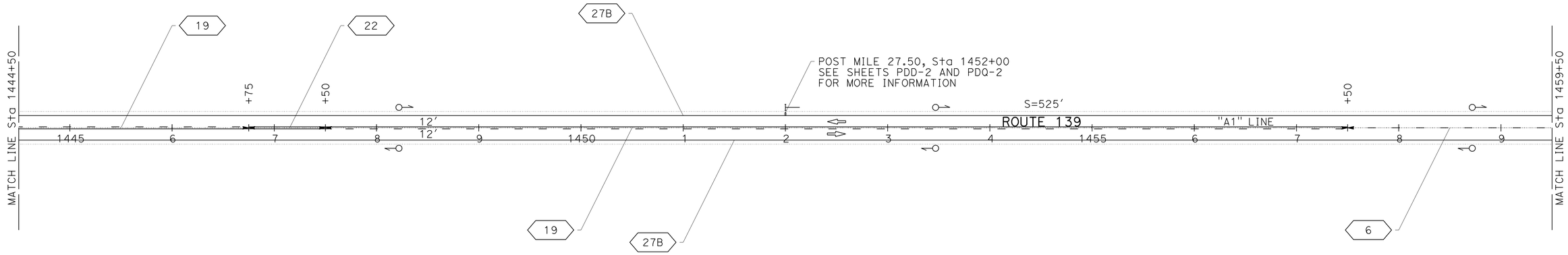

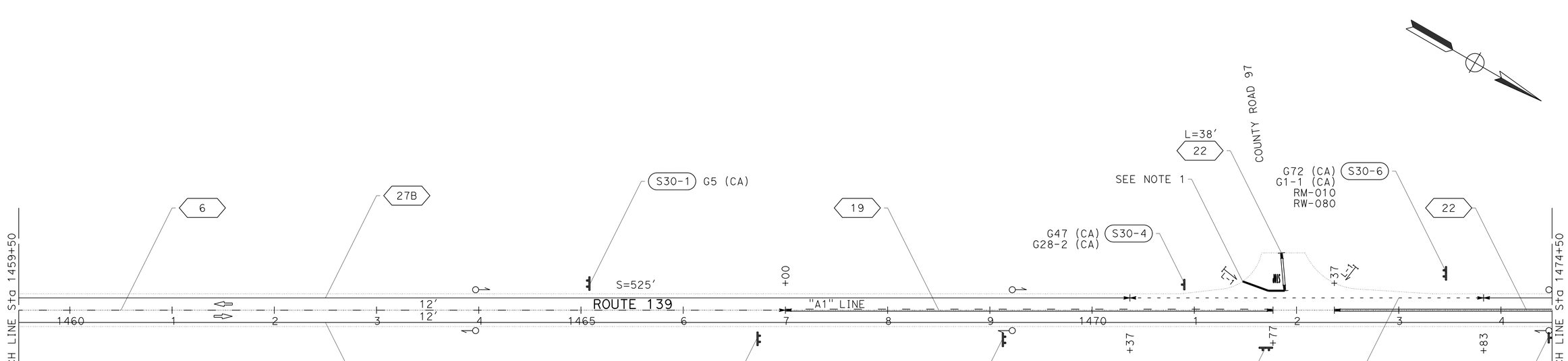

APPROVED FOR PAVEMENT DELINEATION AND SIGN WORK ONLY

PAVEMENT DELINEATION AND SIGN PLAN

SCALE: 1" = 50'

PD-30

REVISED BY	DATE REVISED
AUSTIN BUIST	TOBY CRAWFORD
CALCULATED-DESIGNED BY	CHECKED BY
FUNCTIONAL SUPERVISOR	STEVE TOPAL

STATE OF CALIFORNIA - DEPARTMENT OF TRANSPORTATION
Caltrans® DESIGN

P:\proj1\02\4E440_plans\pse\24e440na030.dgn

LAST REVISION 01-27-15 | DATE PLOTTED => 24-JUN-2015 | TIME PLOTTED => 11:21

Dist	COUNTY	ROUTE	POST MILES TOTAL PROJECT	SHEET No.	TOTAL SHEETS
02	Mod	139	R10.7/28.0	111	149

REGISTERED CIVIL ENGINEER 06-15-15 DATE

06-15-15
PLANS APPROVAL DATE

REGISTERED PROFESSIONAL ENGINEER
AUSTIN V. BUIST
No. C77412
Exp. 6-30-17
CIVIL
STATE OF CALIFORNIA

THE STATE OF CALIFORNIA OR ITS OFFICERS OR AGENTS SHALL NOT BE RESPONSIBLE FOR THE ACCURACY OR COMPLETENESS OF SCANNED COPIES OF THIS PLAN SHEET.

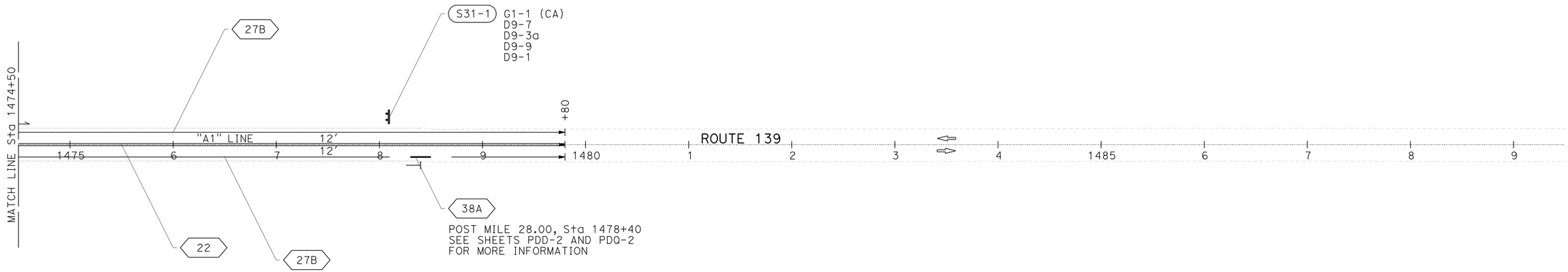

APPROVED FOR PAVEMENT DELINEATION AND SIGN WORK ONLY

PAVEMENT DELINEATION AND SIGN PLAN

SCALE: 1" = 50'

PD-31

REVISED BY	AUSTIN BUIST
DATE REVISED	TOBY CRAWFORD
CALCULATED-DESIGNED BY	
CHECKED BY	
FUNCTIONAL SUPERVISOR	STEVE TOPAL

STATE OF CALIFORNIA - DEPARTMENT OF TRANSPORTATION
Caltrans®
DESIGN

P:\proj1\02\4E440_plans\pse\24e440na031.dgn

LAST REVISION 01-27-15 | DATE PLOTTED => 24-JUN-2015 | TIME PLOTTED => 11:21

Dist	COUNTY	ROUTE	POST MILES TOTAL PROJECT	SHEET No.	TOTAL SHEETS
02	Mod	139	R10.7/28.0	112	149

REGISTERED CIVIL ENGINEER 06-15-15 DATE

06-15-15
PLANS APPROVAL DATE

REGISTERED PROFESSIONAL ENGINEER
AUSTIN V. BUIST
No. C77412
Exp. 6-30-17
CIVIL
STATE OF CALIFORNIA

THE STATE OF CALIFORNIA OR ITS OFFICERS OR AGENTS SHALL NOT BE RESPONSIBLE FOR THE ACCURACY OR COMPLETENESS OF SCANNED COPIES OF THIS PLAN SHEET.

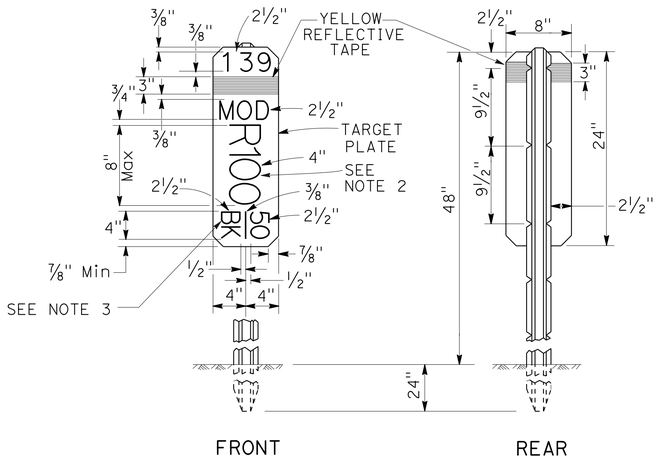

FRONT REAR

NOTES:
1. THE MARKER SHALL BE WHITE (NON-REFLECTIVE) TARGET PLATE WITH BLACK SERIES D NUMERALS AND LETTERS.
2. A POST MILE PREFIX, SUCH AS "R", SHALL APPLY ONLY WHEN DIRECTED BY THE ENGINEER.
3. "BK" (BACK), "AH" (AHEAD), OR A BLANK SPACE SHALL APPLY AS DIRECTED BY THE ENGINEER.
4. ALL INFORMATION SHALL BE IN ENGLISH UNITS (MILES).

POST MILE MARKER DETAIL

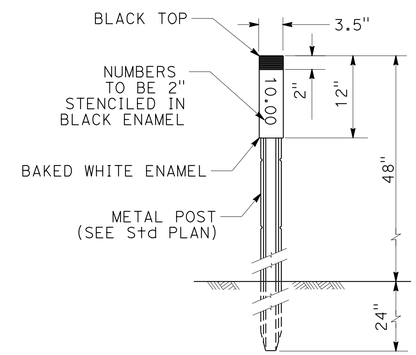

MARKER (CULVERT)

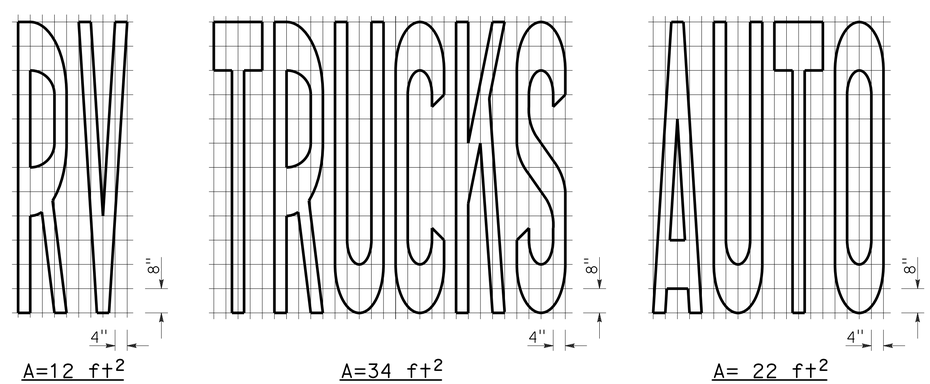

PAVEMENT MARKING DETAILS

PAVEMENT DELINEATION DETAILS

NO SCALE

PDD-1

STATE OF CALIFORNIA - DEPARTMENT OF TRANSPORTATION
Caltrans® DESIGN

FUNCTIONAL SUPERVISOR: STEVE TOPAL
CALCULATED-DESIGNED BY: AUSTIN BUIST
CHECKED BY: TOBY CRAWFORD
REVISED BY
DATE REVISED

P:\proj\02\4E440_plans\pse\24e440nb001.dgn

LAST REVISION 01-14-15
DATE PLOTTED => 24-JUN-2015
TIME PLOTTED => 11:21

Dist	COUNTY	ROUTE	POST MILES TOTAL PROJECT	SHEET No.	TOTAL SHEETS
02	Mod	139	R10.7/28.0	113	149

REGISTERED CIVIL ENGINEER 06-15-15 DATE

PLANS APPROVAL DATE 06-15-15

REGISTERED PROFESSIONAL ENGINEER AUSTIN V. BUIST No. C77412 Exp. 6-30-17 CIVIL STATE OF CALIFORNIA

THE STATE OF CALIFORNIA OR ITS OFFICERS OR AGENTS SHALL NOT BE RESPONSIBLE FOR THE ACCURACY OR COMPLETENESS OF SCANNED COPIES OF THIS PLAN SHEET.

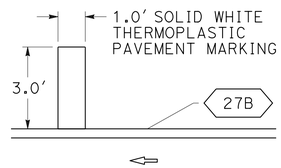

DETAIL A

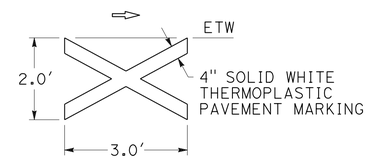

DETAIL B

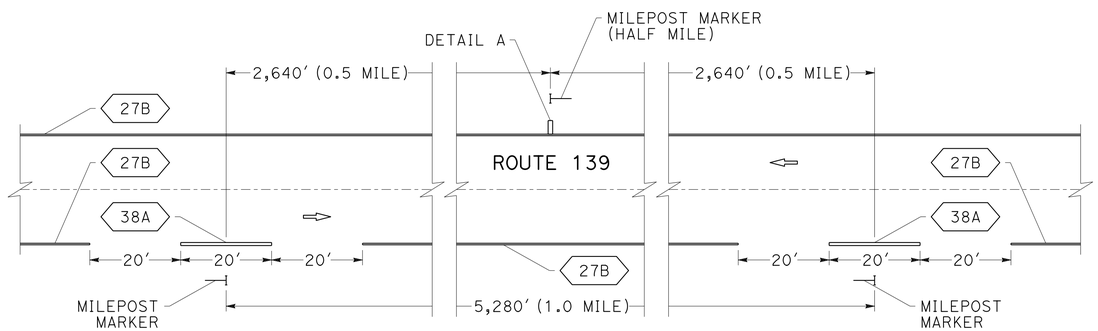

TYPICAL MILEPOST DETAIL (CONVENTIONAL ROADWAY)

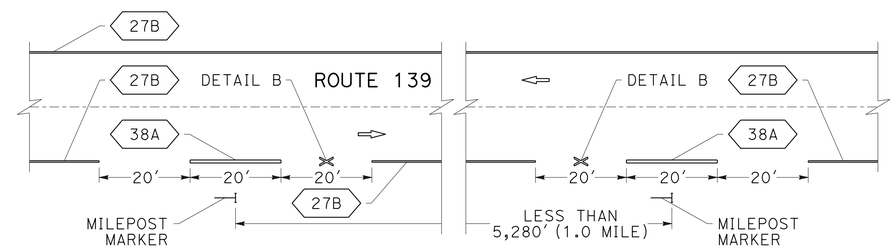

TYPICAL MILEPOST DETAIL FOR EQUATIONS (CONVENTIONAL ROADWAY)

NO HALF MILE DETAIL WITHIN AN EQUATION

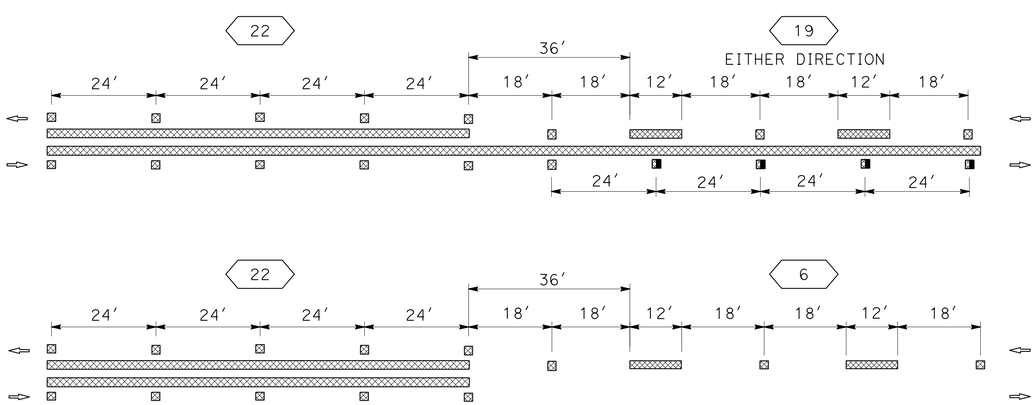

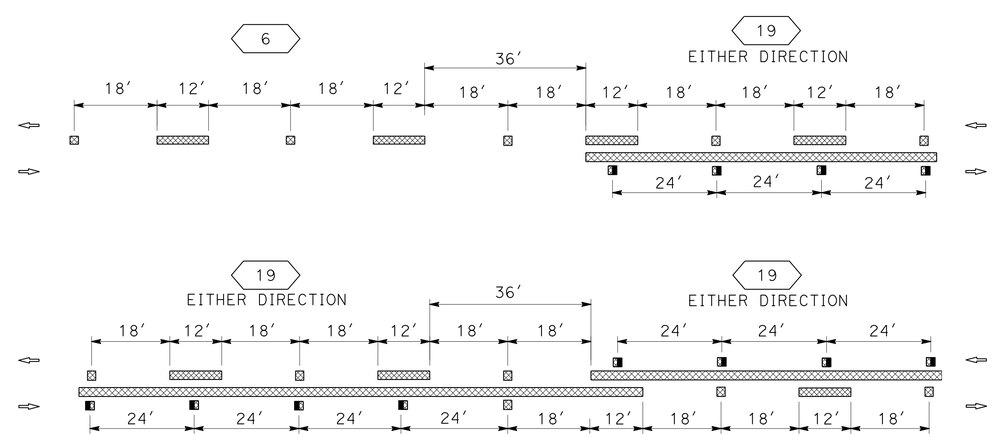

TYPICAL STRIPE TRANSITION DETAILS

PAVEMENT DELINEATION DETAILS

NO SCALE

PDD-2

REVISED BY | DATE REVISED

AUSTIN BUIST | TOBY CRAWFORD

CALCULATED-DESIGNED BY | CHECKED BY

FUNCTIONAL SUPERVISOR | STEVE TOPAL

STATE OF CALIFORNIA - DEPARTMENT OF TRANSPORTATION

Caltrans® **DESIGN**

P:\proj\02\4E440_plans\pse\24e440nb002.dgn

LAST REVISION 01-05-15 | DATE PLOTTED => 24-JUN-2015 | TIME PLOTTED => 11:21

BORDER LAST REVISED 7/2/2010 | USERNAME => s115152 | DGN FILE => 24e440nb002.dgn | RELATIVE BORDER SCALE IS IN INCHES 0 1 2 3 | UNIT 0319 | PROJECT NUMBER & PHASE 02-0002-0285-1 | EA 02-4E4401

Dist	COUNTY	ROUTE	POST MILES TOTAL PROJECT	SHEET No.	TOTAL SHEETS
02	Mod	139	R10.7/28.0	114	149

REGISTERED CIVIL ENGINEER 06-15-15 DATE

06-15-15
PLANS APPROVAL DATE

REGISTERED PROFESSIONAL ENGINEER AUSTIN V. BUIST No. C77412 Exp. 6-30-17 CIVIL STATE OF CALIFORNIA

THE STATE OF CALIFORNIA OR ITS OFFICERS OR AGENTS SHALL NOT BE RESPONSIBLE FOR THE ACCURACY OR COMPLETENESS OF SCANNED COPIES OF THIS PLAN SHEET.

NOTE:

1. FOR ADDITIONAL INFORMATION SEE SHEET PD-12.

LEGEND:

- BEGIN/END TRAFFIC STRIPE DETAIL
- CHANGE TRAFFIC STRIPE DETAIL
- TYPE I 24'-0" ARROW
- TYPE III ARROW
- TYPE VI ARROW
- DELINEATOR (CLASS 2) (TYPE E)
- MARKER (CULVERT)
- MILEPOST MARKER
- OBJECT MARKER (TYPE L)

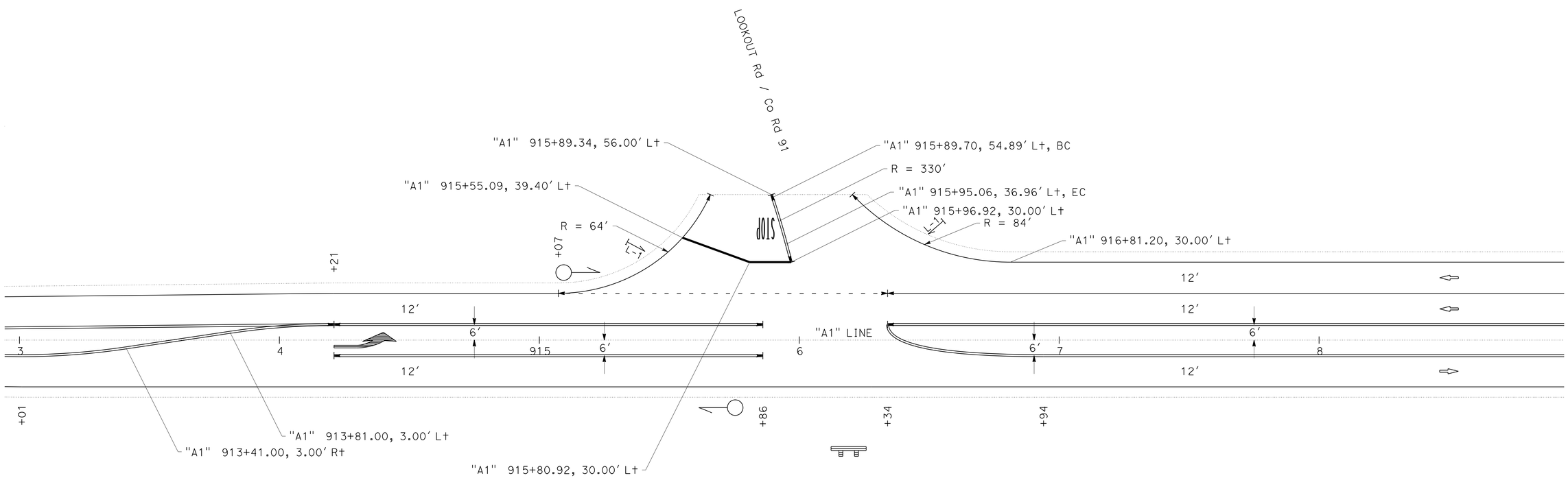

LOOKOUT Rd / Co Rd 91 INTERSECTION DETAIL

APPROVED FOR PAVEMENT DELINEATION AND SIGN WORK ONLY

PAVEMENT DELINEATION DETAILS

SCALE: 1" = 20'

PDD-3

REVISED BY	DATE REVISED

CALCULATED-DESIGNED BY	AUSTIN BUIST
CHECKED BY	TOBY CRAWFORD
FUNCTIONAL SUPERVISOR	STEVE TOPAL

STATE OF CALIFORNIA - DEPARTMENT OF TRANSPORTATION
Caltrans
DESIGN

P:\proj1\02\4E440_plans\pse\24e440nb003.dgn

LAST REVISION 02-02-15 | DATE PLOTTED => 24-JUN-2015 TIME PLOTTED => 11:21

Dist	COUNTY	ROUTE	POST MILES TOTAL PROJECT	SHEET No.	TOTAL SHEETS
02	Mod	139	R10.7/28.0	115	149

REGISTERED CIVIL ENGINEER 06-15-15 DATE

PLANS APPROVAL DATE 06-15-15

REGISTERED PROFESSIONAL ENGINEER AUSTIN V. BUIST No. C77412 Exp. 6-30-17 CIVIL STATE OF CALIFORNIA

THE STATE OF CALIFORNIA OR ITS OFFICERS OR AGENTS SHALL NOT BE RESPONSIBLE FOR THE ACCURACY OR COMPLETENESS OF SCANNED COPIES OF THIS PLAN SHEET.

THERMOPLASTIC PAVEMENT MARKING QUANTITIES

SHEET	DESCRIPTION	QUANTITY SQFT	LOCATION
PD-1	DETAIL B	3	PM T11.00
	DETAIL B	3	PM T11.00
PD-2	DETAIL B	3	PM 12.00
PD-3	DETAIL A	3	PM 12.50
PD-4	LIMIT LINE	29	MCKAY / FLATHOG ROAD
	"STOP" MARKING	22	
	LIMIT LINE	29	
	"STOP" MARKING	22	
PD-5	DETAIL A	3	PM 13.50
PD-7	DETAIL A	3	PM 14.50
PD-8	DETAIL A	3	PM 15.50
	LIMIT LINE	31	HACKAMORE ROAD
	"STOP" MARKING	22	
PD-10	DETAIL A	3	PM 16.50
PD-12	TYPE III (L) ARROW	42	LOOKOUT Rd / Co Rd 91
	TYPE III (L) ARROW	42	
	LIMIT LINE	44	
	"STOP" MARKING	22	
	TYPE III (R) ARROW	42	
	TYPE III (R) ARROW	42	
	TYPE III (R) ARROW	42	
	DETAIL A	3	PM 17.50
PD-13	LIMIT LINE	27	DIRT ROAD
	"STOP" MARKING	22	
PD-14	DETAIL A	3	PM 18.50
PD-16	DETAIL A	3	PM 19.50
PD-17	DETAIL A	3	PM 20.50
PD-19	DETAIL A	3	PM 21.50
PD-20	LIMIT LINE	32	HORSE CAMP ROAD
	"STOP" MARKING	22	
PD-21	TYPE VI ARROW	42	
	TYPE VI ARROW	42	
	TYPE VI ARROW	42	
	DETAIL A	3	PM 22.50
PD-22	LIMIT LINE	12	AGRICULTURAL INSPECTION STATION
	LIMIT LINE	12	
	"STOP" MARKING	22	
	"STOP" MARKING	22	
	"STOP" MARKING	22	
	TYPE I 24'-0" ARROW	31	
	"TRUCKS" MARKING	34	
	TYPE I 24'-0" ARROW	31	
	TYPE I 24'-0" ARROW	31	
	"AUTO" MARKING	22	
	"RV" MARKING	12	
PD-23	DETAIL A	3	PM 23.50
PD-24	DETAIL A	3	PM 24.50
	LIMIT LINE	34	SOUTH MEARS ROAD
	"STOP" MARKING	22	
PD-26	DETAIL A	3	PM 25.50
PD-28	DETAIL A	3	PM 26.50
	LIMIT LINE	34	NORTH MEARS ROAD
	"STOP" MARKING	22	
PD-30	DETAIL A	3	PM 27.50
	LIMIT LINE	43	Co Rd 97
	"STOP" MARKING	22	
	TOTAL	1145	

PAVEMENT DELINEATION QUANTITIES

SHEET	THERMOPLASTIC TRAFFIC STRIPE (SPRAYABLE)									PAVEMENT MARKER (RETROREFLECTIVE-RECESSED)		
	4" YELLOW				4" WHITE			8" WHITE				
	DETAIL 6	DETAIL 19	DETAIL 22	DETAIL 29	DETAIL 12	DETAIL 27B	DETAIL 27C	DETAIL 38	DETAIL 38A	TYPE D	TYPE G	TYPE H
	LF	LF	LF	LF	LF	LF	LF	LF	LF	EA	EA	EA
PD-1	2530					5000			20	52		
PD-2	1000	2000				5940			20	63		84
PD-3	3000					6000				63		
PD-4	3000		58			5512	428		20	63		
PD-5	1575	1425				6000				63		60
PD-6	2850	150				5940			20	63		7
PD-7	1800	1200				5940			20	63		50
PD-8	2400	600	27			5770	230			63		25
PD-9		550	2450			5940			20	216		23
PD-10			2900			5800				242		
PD-11			2696	8		5340			20	250		
PD-12			1698	2622		5969	127	660		248	28	
PD-13	830	344	1717			5540	200		20	166		15
PD-14	2210	790				6000				63		33
PD-15	1375	1225	400			5940			20	89		51
PD-16	210	2140	650			5940			20	103		90
PD-17	1780	945	175			5800				71		40
PD-18	900	750	1150			5740			20	131		32
PD-19	1590	710	700			6000				106		30
PD-20	1100	825	1077			5656	284		20	126		35
PD-21	40	780	2180		1824	6000				199	39	33
PD-22		825	2175		2059	5468			1128	199	43	35
PD-23	695	2305				6000				63		96
PD-24	2075	338	578			5701	239		20	95		15
PD-25	2200	430	370			5940			20	87		18
PD-26	3000					6000				63		
PD-27	2200	650	150			5940			20	72		27
PD-28	1720	150	1129			5722	278			139		7
PD-29	2275	725				5940			20	63		31
PD-30	950	1702	325			5654	346			79		71
PD-31			530			1000			20	42		
SUBTOTAL	43,305	21,559	23,135	2630	3883	175,132	2132	660	1468	3405	110	908
TOTAL	273,904									4423		

PAVEMENT DELINEATION QUANTITIES

PDQ-1

STATE OF CALIFORNIA - DEPARTMENT OF TRANSPORTATION
Caltrans® DESIGN

FUNCTIONAL SUPERVISOR: STEVE TOPAL
CALCULATED-DESIGNED BY: AUSTIN BUIST
CHECKED BY: TOBY CRAWFORD
REVISED BY / DATE REVISED

P:\proj1\02\4E440_plans\pse\24e440nc001.dgn

LAST REVISION: DATE PLOTTED => 24-JUN-2015 TIME PLOTTED => 11:21
06-08-15

Dist	COUNTY	ROUTE	POST MILES TOTAL PROJECT	SHEET No.	TOTAL SHEETS
02	Mod	139	R10.7/28.0	116	149

REGISTERED CIVIL ENGINEER 06-15-15 DATE

06-15-15
PLANS APPROVAL DATE

REGISTERED PROFESSIONAL ENGINEER AUSTIN V. BUIST No. C77412 Exp. 6-30-17 CIVIL STATE OF CALIFORNIA

THE STATE OF CALIFORNIA OR ITS OFFICERS OR AGENTS SHALL NOT BE RESPONSIBLE FOR THE ACCURACY OR COMPLETENESS OF SCANNED COPIES OF THIS PLAN SHEET.

MILEPOST MARKER

SHEET No.	LOCATION		QUANTITY
	PM	STATION	EA
PD-1	T11.00	605+93	1
PD-2	11.67	615+91	1
	T11.19	615+91	1
	11.67	615+91	1
	T11.19	615+91	1
	12.00	633+60	1
PD-3	12.50	660+00	1
PD-4	13.00	686+40	1
PD-5	13.50	712+80	1
PD-6	14.00	739+20	1
PD-7	14.50	765+60	1
	15.00	792+00	1
PD-8	15.50	818+40	1
PD-9	16.00	844+80	1
PD-10	16.50	871+20	1
PD-11	17.00	897+60	1
PD-12	17.50	924+00	1
PD-13	18.00	950+40	1
PD-14	18.50	976+80	1
PD-15	19.00	1003+20	1
PD-16	19.50	1029+60	1
	20.00	1056+00	1
PD-17	20.50	1082+40	1
PD-18	21.00	1108+80	1
PD-19	21.50	1135+20	1
PD-20	22.00	1161+60	1
PD-21	22.50	1188+00	1
PD-22	23.00	1214+40	1
PD-23	23.50	1240+80	1
PD-24	24.00	1267+20	1
	24.50	1293+60	1
PD-25	25.00	1320+00	1
PD-26	25.50	1346+40	1
PD-27	26.00	1372+80	1
PD-28	26.50	1399+20	1
PD-29	27.00	1425+60	1
PD-30	27.50	1452+00	1
PD-31	28.00	1478+40	1
		TOTAL	38

DELINEATOR (CLASS 2)

SHEET No.	TYPE E	TYPE F
	EA	EA
PD-1	24	
PD-2	14	
PD-3	12	
PD-4	10	
PD-5	12	
PD-6	12	
PD-7	12	
PD-8	12	
PD-9	10	
PD-10	18	
PD-11	32	
PD-12	12	
PD-13	20	
PD-14	12	
PD-15	12	
PD-16	12	
PD-17	12	
PD-18	18	
PD-19	12	
PD-20	12	
PD-21	9	3
PD-22	12	
PD-23	12	
PD-24	10	
PD-25	12	
PD-26	12	
PD-27	10	
PD-28	12	
PD-29	12	
PD-30	12	
SUB TOTAL	403	3
TOTAL	406	

OBJECT MARKERS

ROAD CONNECTION	SHEET No.	OBJECT MARKER (TYPE L-1)
		EA
MCKAY / FLATHOG Rd	PD-4	4
HACKAMORE Rd	PD-8	2
LOOKOUT Rd / Co Rd 91	PD-12	2
DIRT Rd	PD-13	2
HORSE CAMP Rd	PD-20	2
SOUTH MEARS Rd	PD-24	2
NORTH MEARS Rd	PD-28	2
Co Rd 97	PD-30	2
	TOTAL	18

MARKER (CULVERT)

SHEET No.	LOCATION		QUANTITY
	STATION	PM	EA
PD-1	"A1" 603+54	10.99	2
	"A1" 610+12	11.10	2
PD-2	"A1" 641+12	12.16	2
PD-4	"A1" 698+10	13.23	2
PD-5	"A1" 705+11	13.38	2
	"A1" 718+60	13.67	2
PD-6	"A1" 737+09	13.97	2
	"A1" 742+10	14.08	2
	"A1" 760+60	14.43	2
PD-7	"A1" 774+15	14.70	2
PD-8	"A1" 807+93	15.35	2
PD-9	"A1" 846+70	16.06	2
		TOTAL	24

PAVEMENT DELINEATION QUANTITIES

PDQ-2

REVISED BY | DATE REVISED
AUSTIN BUIST | TOBY CRAWFORD
CALCULATED-DESIGNED BY | CHECKED BY
FUNCTIONAL SUPERVISOR | STEVE TOPAL

STATE OF CALIFORNIA - DEPARTMENT OF TRANSPORTATION
Caltrans® DESIGN

P:\proj1\02\4E440_plans\pse\24e440nc002.dgn

LAST REVISION 06-05-15 | DATE PLOTTED => 24-JUN-2015 | TIME PLOTTED => 11:21

Dist	COUNTY	ROUTE	POST MILES TOTAL PROJECT	SHEET No.	TOTAL SHEETS
02	Mod	139	R10.7/28.0	117	149

Frank J. Rivas 06-15-15
REGISTERED CIVIL ENGINEER DATE

06-15-15
PLANS APPROVAL DATE

REGISTERED PROFESSIONAL ENGINEER
FRANK RIVAS
No. C53592
Exp. 6-30-17
CIVIL
STATE OF CALIFORNIA

THE STATE OF CALIFORNIA OR ITS OFFICERS OR AGENTS SHALL NOT BE RESPONSIBLE FOR THE ACCURACY OR COMPLETENESS OF SCANNED COPIES OF THIS PLAN SHEET.

NOTES:

1. ALL DIMENSIONS ARE IN INCHES.

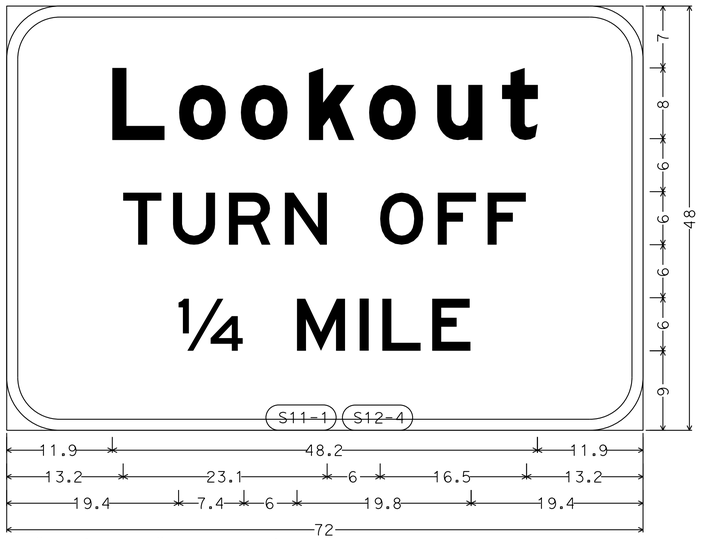

6.0" Radius, 1.3" Border, White on Green;
[Lookout] E Mod; [TURN OFF] E; [¼ MILE] E;

G22

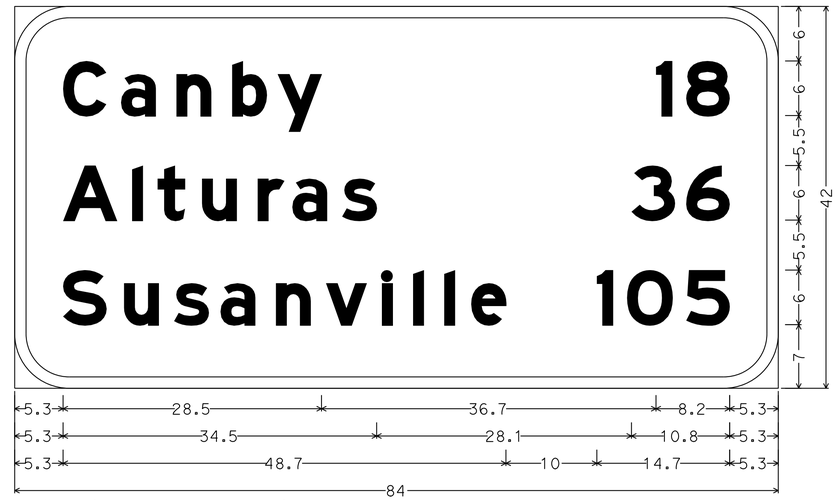

6.0" Radius, 1.3" Border, White on Green;
[Canby] E Mod; [Alturas] E Mod; [Susanville] E Mod; [18] E Mod; [36] E Mod; [105] E Mod;

G5

S12-1

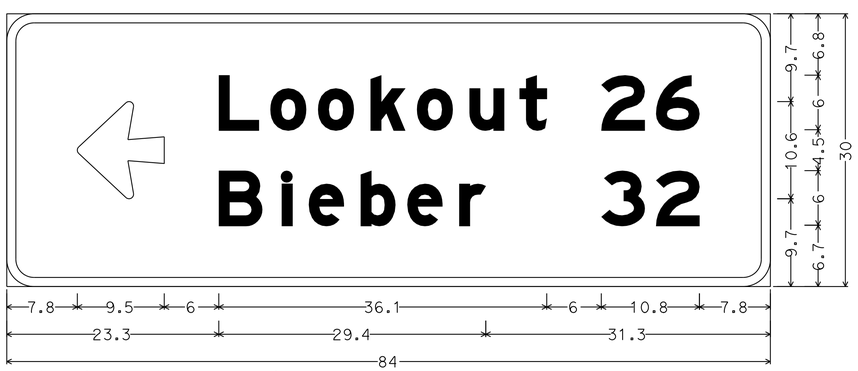

3.0" Radius, 1.0" Border, White on Green;
Arrow 6UC-2LH - 9.6" 180°; [Lookout] E Mod; [Bieber] E Mod; [26] E Mod; [32] E Mod;

G1-4

S11-2

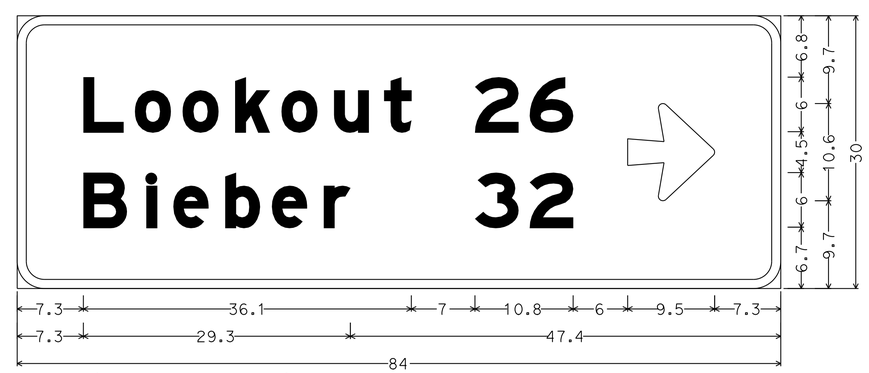

3.0" Radius, 1.0" Border, White on Green;
[Lookout] E Mod; [Bieber] E Mod; [26] E Mod; [32] E Mod; Arrow 6UC-2LH - 9.6" 0°;

G1-4

S12-3

SIGN DETAILS

NO SCALE

SD-1

REVISED BY	DATE REVISED

CALCULATED-DESIGNED BY	CHECKED BY
FRANK RIVAS	DAN FISHER

FUNCTIONAL SUPERVISOR: ROB STINGER

STATE OF CALIFORNIA - DEPARTMENT OF TRANSPORTATION
Caltrans® TRAFFIC OPS.

P:\proj\02\4E440_plans\pse\24e440ob001.dgn

LAST REVISION 06-15-15 | DATE PLOTTED => 24-JUN-2015 | TIME PLOTTED => 11:21

Dist	COUNTY	ROUTE	POST MILES TOTAL PROJECT	SHEET No.	TOTAL SHEETS
02	Mod	139	R10.7/28.0	118	149

REGISTERED CIVIL ENGINEER 06-15-15 DATE

06-15-15
PLANS APPROVAL DATE

REGISTERED PROFESSIONAL ENGINEER FRANK RIVAS No. C53592 Exp. 6-30-17 CIVIL STATE OF CALIFORNIA

THE STATE OF CALIFORNIA OR ITS OFFICERS OR AGENTS SHALL NOT BE RESPONSIBLE FOR THE ACCURACY OR COMPLETENESS OF SCANNED COPIES OF THIS PLAN SHEET.

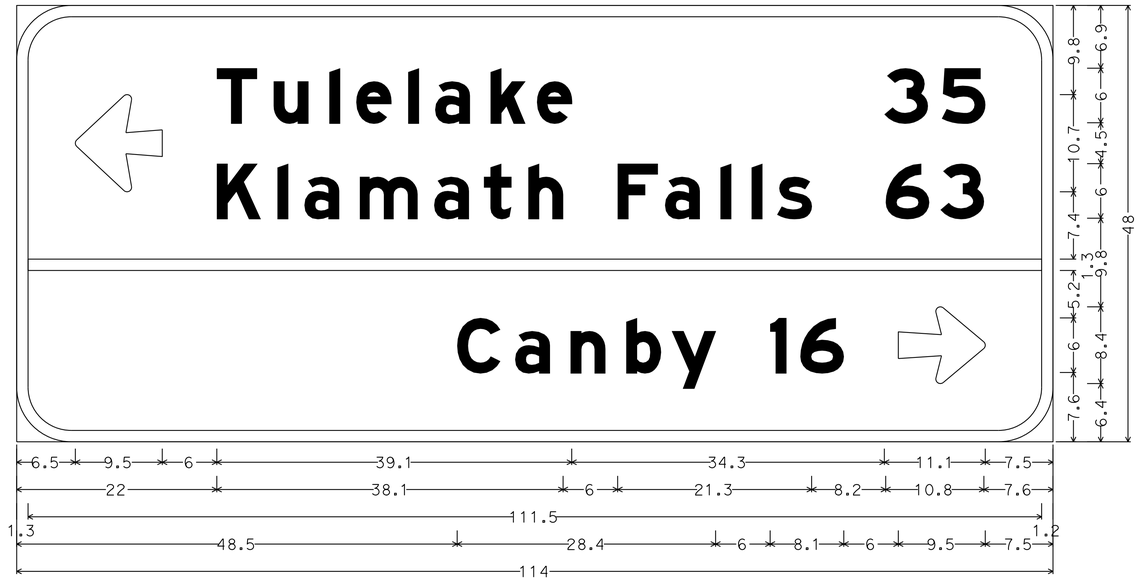

6.0" Radius, 1.3" Border, White on Green;
Arrow 6UC-2LH - 9.6" 180°; [Tulelake] E Mod; [Klamath Falls] E Mod; [35] E Mod; [63] E Mod; [Canby] E Mod; [16] E Mod;
Arrow 6UC-1L - 9.6" 0°;

G1-13

S12-2

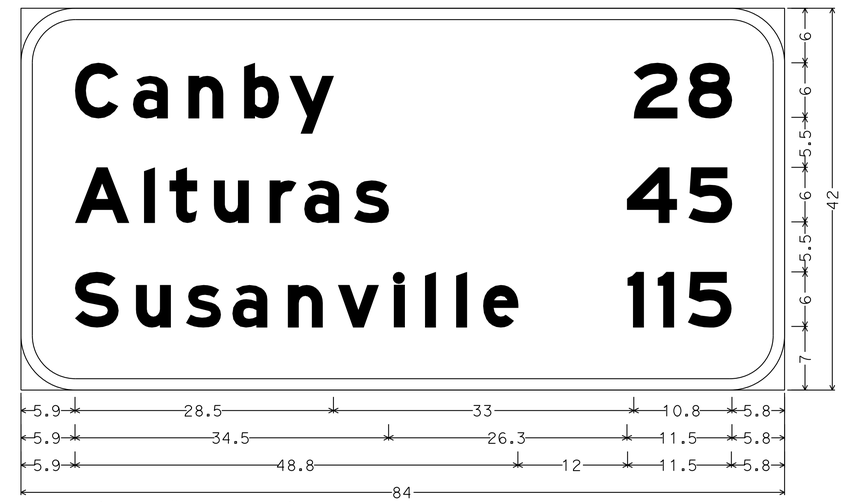

6.0" Radius, 1.3" Border, White on Green;
[Canby] E Mod; [Alturas] E Mod; [Susanville] E Mod; [28] E Mod; [45] E Mod; [115] E Mod;

G5

S30-1

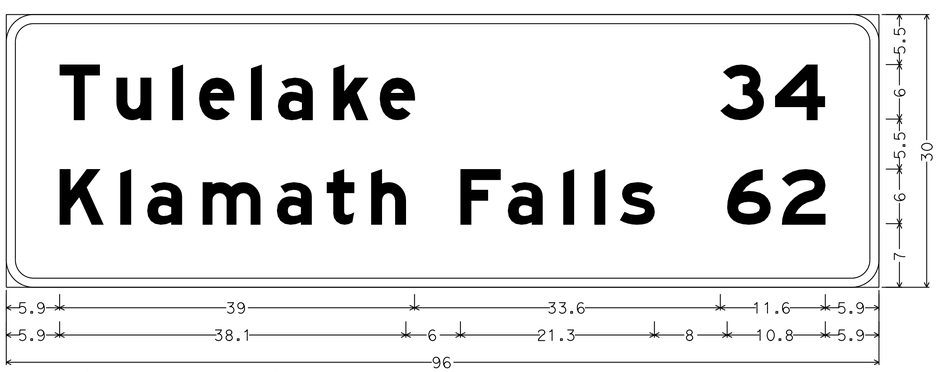

3.0" Radius, 1.0" Border, White on Green;
[Tulelake] E Mod; [Klamath Falls] E Mod; [34] E Mod; [62] E Mod;

G5

S12-5

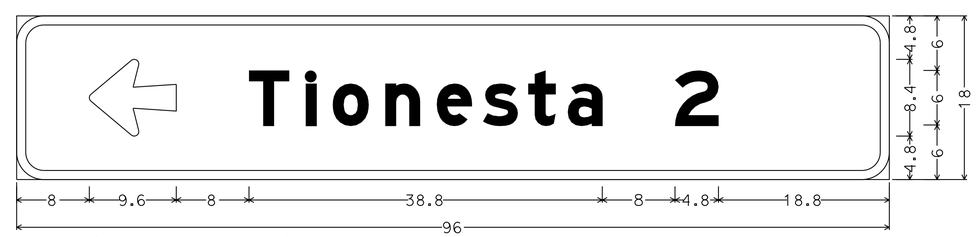

3.0" Radius, 1.0" Border, White on Green;
Arrow 6UC-1L - 9.6" 180°; [Tionesta] E Mod; [2] E Mod;

G1-1

S30-2

SIGN DETAILS

NO SCALE

SD-2

STATE OF CALIFORNIA - DEPARTMENT OF TRANSPORTATION
Caltrans® TRAFFIC OPS.

FUNCTIONAL SUPERVISOR: ROB STINGER
CALCULATED-DESIGNED BY: FRANK RIVAS
CHECKED BY: DAN FISHER
REVISED BY / DATE REVISED

P:\proj\02\4E440_plans\pse\24e440ob002.dgn

LAST REVISION 06-15-15 | DATE PLOTTED => 24-JUN-2015 | TIME PLOTTED => 11:21

Dist	COUNTY	ROUTE	POST MILES TOTAL PROJECT	SHEET No.	TOTAL SHEETS
02	Mod	139	R10.7/28.0	119	149

Frank J. Rivas 06-15-15
REGISTERED CIVIL ENGINEER DATE

06-15-15
PLANS APPROVAL DATE

REGISTERED PROFESSIONAL ENGINEER
FRANK RIVAS
No. C53592
Exp. 6-30-17
CIVIL
STATE OF CALIFORNIA

THE STATE OF CALIFORNIA OR ITS OFFICERS OR AGENTS SHALL NOT BE RESPONSIBLE FOR THE ACCURACY OR COMPLETENESS OF SCANNED COPIES OF THIS PLAN SHEET.

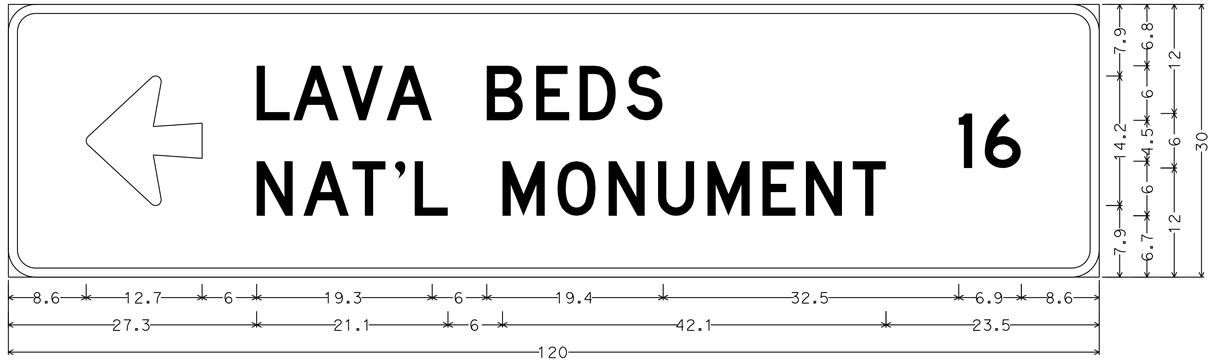

3.0" Radius, 1.0" Border, White on Brown;
Arrow 6CAP-2LH - 12.8" 180°; [LAVA BEDS] D; [NAT'L MONUMENT] D; [16] D;

G72
S30-3

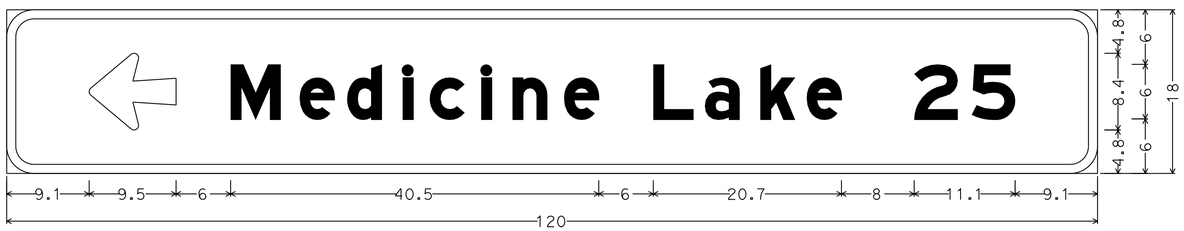

3.0" Radius, 1.0" Border, White on Brown;
Arrow 6UC-1L - 9.6" 180°; [Medicine Lake] E Mod; [25] E Mod;

G1-1
S30-3

3.0" Radius, 1.0" Border, White on Green;
[Canby] E Mod; [28] E Mod; Arrow 6UC-1L - 9.6" 0°; Arrow 6UC-1L - 9.6" 180°; [Klamath Falls] E Mod; [53] E Mod;

G1-7
S30-5

SIGN DETAILS
NO SCALE

SD-3

REVISED BY	DATE REVISED

CALCULATED-DESIGNED BY	CHECKED BY
FRANK RIVAS	DAN FISHER

FUNCTIONAL SUPERVISOR: ROB STINGER

STATE OF CALIFORNIA - DEPARTMENT OF TRANSPORTATION
Caltrans® TRAFFIC OPS.

P:\proj\02\4E440_plans\pse\24e440ob003.dgn

LAST REVISION 06-15-15 | DATE PLOTTED => 24-JUN-2015 | TIME PLOTTED => 11:21

Dist	COUNTY	ROUTE	POST MILES TOTAL PROJECT	SHEET No.	TOTAL SHEETS
02	Mod	139	R10.7/28.0	120	149

Frank J. Rivas 06-15-15
REGISTERED CIVIL ENGINEER DATE

06-15-15
PLANS APPROVAL DATE

REGISTERED PROFESSIONAL ENGINEER
FRANK RIVAS
No. C53592
Exp. 6-30-17
CIVIL
STATE OF CALIFORNIA

THE STATE OF CALIFORNIA OR ITS OFFICERS OR AGENTS SHALL NOT BE RESPONSIBLE FOR THE ACCURACY OR COMPLETENESS OF SCANNED COPIES OF THIS PLAN SHEET.

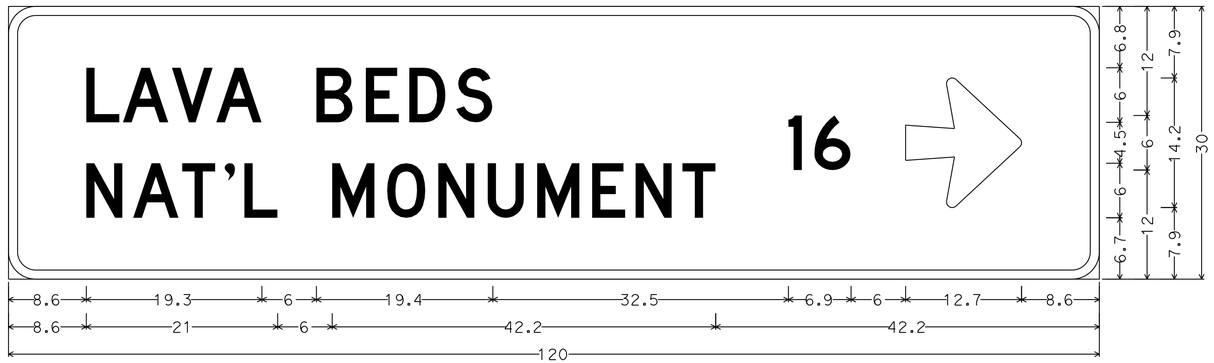

3.0" Radius, 1.0" Border, White on Brown;
[LAVA BEDS] D; [NAT'L MONUMENT] D; [16] D; Arrow 6CAP-2LH - 12.8" 0°;

S30-6
G72

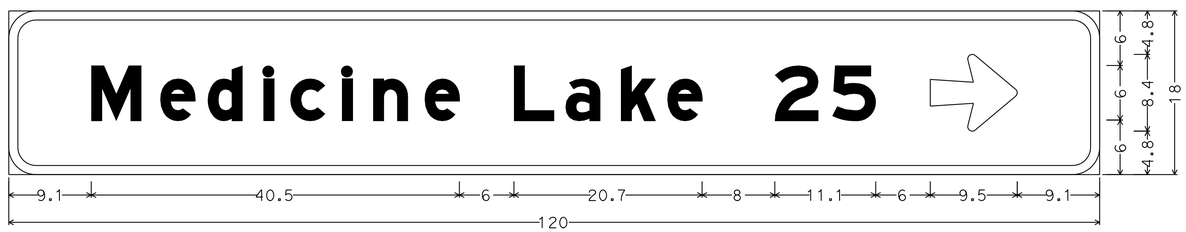

3.0" Radius, 1.0" Border, White on Brown;
[Medicine Lake] E Mod; [25] E Mod; Arrow 6UC-1L - 9.6" 0°;

S30-6
G1-1

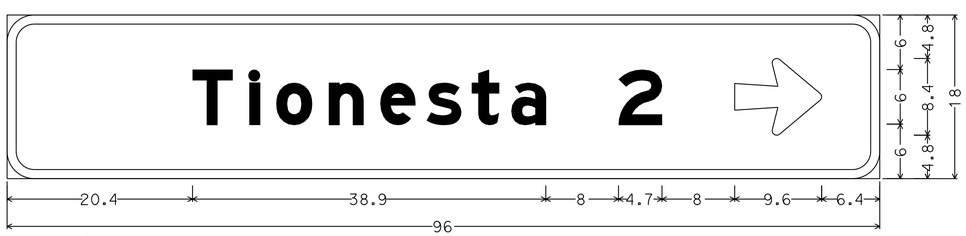

3.0" Radius, 1.0" Border, White on Green;
[Tionesta] E Mod; [2] E Mod; Arrow 6UC-1L - 9.6" 0°;

S31-1
G1-1

SIGN DETAILS
NO SCALE

SD-4

STATE OF CALIFORNIA - DEPARTMENT OF TRANSPORTATION
Caltrans® TRAFFIC OPS.

FUNCTIONAL SUPERVISOR: ROB STINGER
CALCULATED-DESIGNED BY: FRANK RIVAS
CHECKED BY: DAN FISHER
REVISED BY / DATE REVISED

P:\proj1\02\4E440_plans\pse\24e440ob004.dgn

LAST REVISION 06-15-15
DATE PLOTTED => 24-JUN-2015
TIME PLOTTED => 11:22

Dist	COUNTY	ROUTE	POST MILES TOTAL PROJECT	SHEET No.	TOTAL SHEETS
02	Mod	139	R10.7/28.0	121	149

REGISTERED CIVIL ENGINEER 06-15-15 DATE

06-15-15
PLANS APPROVAL DATE

REGISTERED PROFESSIONAL ENGINEER FRANK RIVAS No. C53592 Exp. 6-30-17 CIVIL STATE OF CALIFORNIA

THE STATE OF CALIFORNIA OR ITS OFFICERS OR AGENTS SHALL NOT BE RESPONSIBLE FOR THE ACCURACY OR COMPLETENESS OF SCANNED COPIES OF THIS PLAN SHEET.

NOTES:

1. USE A 2¼" Sq TUBE x 30" LONG, 3/16" THICK ANCHOR FOR 2" POSTS.
   USE A 3" Sq TUBE x 3' LONG, 3/16" THICK ANCHOR FOR 2-1/2 " POSTS.
2. USE A 5/16" CORNER BOLT OR TWO DRIVE RIVETS TO FASTEN ASSEMBLED SIGN AND POST INTO ANCHOR. INSTALL CORNER BOLT OR DRIVE RIVETS INTO THE SIDES FACING TRAFFIC.
3. REMOVE EXISTING AC OR PCC, DRIVE ANCHOR SLEEVE INTO SOIL AND RECAP WITH LIKE MATERIAL, MATCHING EXISTING THICKNESS.
4. 2" POSTS ARE TO BE 1/8" THICK, PERFORATIONS OF 7/16" IN DIAMETER ARE 1" ON CENTER ON ALL SIDES, LENGTHS ARE 10' AND 12'.
5. 2-1/2" POSTS ARE TO BE 1/8" THICK, PERFORATIONS OF 7/16" IN DIAMETER ARE 1" ON CENTER ON ALL SIDES, 2-1/2" POSTS ARE 12' AND 14' IN LENGTH.
6. FOR DETAILS NOT SHOWN, REFER TO THE STANDARD PLANS.
7. 2-1/2" POSTS SHALL BE USED IN SIDEWALK AND HIGH PEDESTRIAN USE PLACEMENTS.
8. ALL ANCHOR SLEEVES SHALL BE EMBEDDED IN PCC, EXCEPT FOR INSTALLATIONS IN PAVEMENTS OR SIDEWALKS.

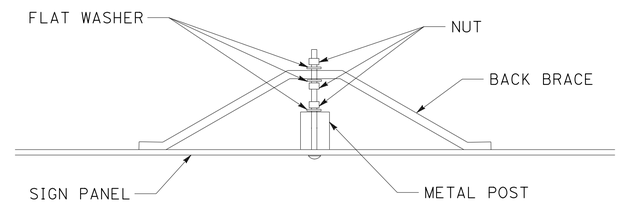

BACK BRACE MOUNTING DETAIL

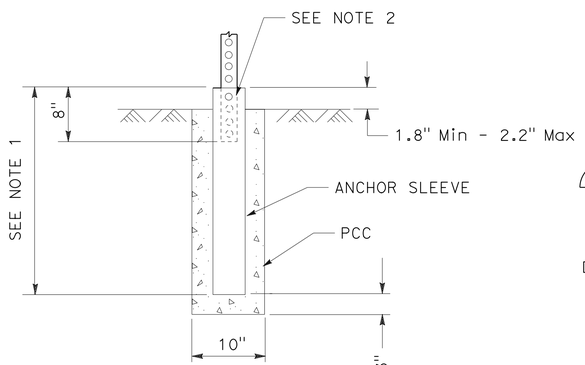

INSTALLATION IN SOIL (PCC)
(SEE NOTE 8)

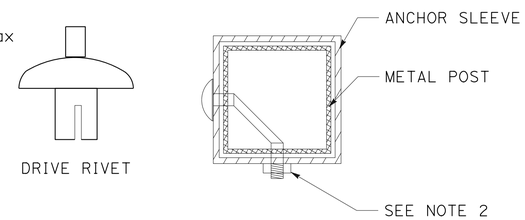

FASTENER DETAILS

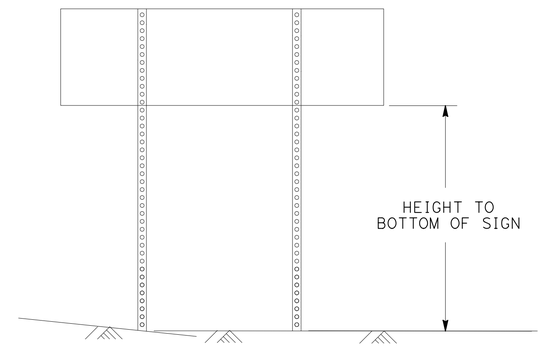

TWO POSTS INSTALLATION
(POST SIZE, SEE CHART BELOW)

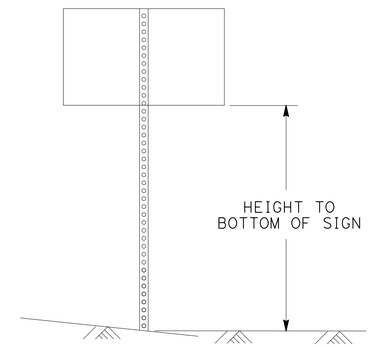

SINGLE POST INSTALLATION
(POST SIZE, SEE CHART BELOW)

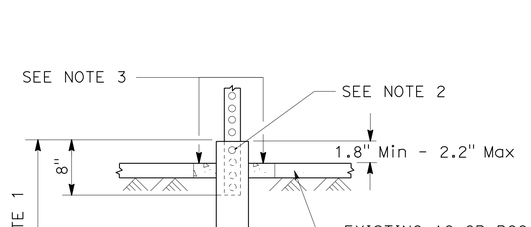

INSTALLATION IN EXISTING AC OR PCC

Max Sq Ft OF SIGN

POST SIZE	60"	72"	84"	96"	108"	120"
2"	18	16	14	12	10	8
2.5"	35	32	28	24	21	21

HEIGHT TO BOTTOM OF SIGN
DOUBLE POST GROUND SIGNS
70 MPH WIND SPEED

Max Sq Ft OF SIGN

POST SIZE	60"	72"	84"	96"	108"	120"
2"	10.5	10	8.7	7.4	6.2	5
2.5"	16	16	16	16	12	12

HEIGHT TO BOTTOM OF SIGN
SINGLE POST GROUND SIGNS
70 MPH WIND SPEED

METAL SIGN POST DETAIL

METAL SIGN POST INSTALLATION DETAILS

SIGN DETAILS
NO SCALE
SD-5

FRANK RIVAS | REVISED BY | DATE REVISED
DAN FISHER | CALCULATED-DESIGNED BY | CHECKED BY
ROB STINGER | FUNCTIONAL SUPERVISOR
STATE OF CALIFORNIA - DEPARTMENT OF TRANSPORTATION
Caltrans® TRAFFIC OPS.

P:\proj1\02\4E440_plans\pse\24e440ob005.dgn

LAST REVISION 06-15-15 | DATE PLOTTED => 24-JUN-2015 | TIME PLOTTED => 11:22

Dist	COUNTY	ROUTE	POST MILES TOTAL PROJECT	SHEET No.	TOTAL SHEETS
02	Mod	139	R10.7/28.0	122	149

REGISTERED CIVIL ENGINEER 06-15-15 DATE

06-15-15
PLANS APPROVAL DATE

REGISTERED PROFESSIONAL ENGINEER AUSTIN V. BUIST No. C77412 Exp. 6-30-17 CIVIL STATE OF CALIFORNIA

THE STATE OF CALIFORNIA OR ITS OFFICERS OR AGENTS SHALL NOT BE RESPONSIBLE FOR THE ACCURACY OR COMPLETENESS OF SCANNED COPIES OF THIS PLAN SHEET.

NOTE:

1. CONTRACTOR TO FIELD VERIFY POST LENGTHS.

ROADSIDE SIGN QUANTITIES

SHEET NUMBER	SIGN NUMBER	SIGN CODE FEDERAL	SIGN CODE CALIFORNIA	SIGN MESSAGE (DESCRIPTION)	SIGN PANEL SIZE (W x H)	POST MATERIAL, SIZE AND LENGTH: METAL 2.5" x 2.5"	WOOD 4" x 6"	WOOD 6" x 6"	ROADSIDE SIGN ONE POST	ROADSIDE SIGN TWO POST	REMOVE ROADSIDE SIGN	TREATED WOOD WASTE
					INCHES	LF	LF	LF	EA	EA	EA	LB
PD-1	S1-1	M3-1	G47	NORTH (NORTH)	24 x 12	9.0			1		1	73.4
			G28-2	CALIFORNIA 139 (STATE ROUTE SHIELD)	28 x 25							
PD-11	S11-1		G22	LOOKOUT TURNOFF 1/4 MILE (ADVANCE TURN)	72 x 48	9.7, 10.7				1	1	245.1
	S11-2	D1-2a	G1-4	LOOKOUT, BIEBER (DESTINATION)	84 x 30	11.2, 12.2				1	1	137.6
			G66-56	(STAA TRUCK TERMINAL ACCESS)	24 x 24							
		M6-3	G36	(DIRECTIONAL ARROW AUXILIARY)	21 x 15							
PD-12	S12-1	D2-3	G5	CANBY, ALTURAS, SUSANVILLE (DISTANCE)	84 x 42	9.2, 10.2				1	1	245.1
	S12-2		G1-13	TULELAKE, KLAMATH FALLS, CANBY (DESTINATION)	114 x 48			15.8, 16.8		1	1	342.1
			G28-1	CALIFORNIA 139 (STATE ROUTE MARKER)	24 x 18							
		M6-4	G35	(DIRECTIONAL ARROW AUXILIARY)	21 x 15							
	S12-3	D1-2a	G1-4	LOOKOUT, BIEBER (DESTINATION)	84 x 30	10.5, 11.5				1	1	137.6
			G66-56	(STAA TRUCK TERMINAL ACCESS)	24 x 24							
		M6-3	G36	(DIRECTIONAL ARROW AUXILIARY)	21 x 15							
	S12-4		G22	LOOKOUT TURNOFF 1/4 MILE (ADVANCE TURN)	72 x 48	9.7, 10.7				1	1	245.1
	S12-5		G5	TULELAKE, KLAMATH FALLS (DISTANCE)	96 x 30	8.2, 9.2				1	1	137.6
PD-30	S30-1		G5	CANBY, ALTURAS, SUSANVILLE (DISTANCE)	84 x 42	9.2, 10.2				1	1	245.1
	S30-2		G1-1	TIONESTA (DESTINATION)	96 x 18	8.2, 9.2				1	1	230.7
		D9-7		(FUEL SYMBOL)	24 x 24							
		D9-3a		(CAMPING TRAILER SYMBOL)	24 x 24							
		D9-9		(LODGING SYMBOL)	24 x 24							
	S30-3		G72	LAVA BEDS NAT'L MONUMENT	120 x 30			13.0, 14.0		1	1	342.1
			G1-1	MEDICINE LAKE (DESTINATION)	120 x 18							
		RM-010		(CAMPING TENT)	24 x 24							
		RW-080		(BOAT LAUNCHING RAMP)	24 x 24							
	S30-4	M3-3	G48	SOUTH (SOUTH)	24 x 12	9.0			1		1	73.4
			G28-2	CALIFORNIA 139 (STATE ROUTE SHIELD)	28 x 25							
	S30-5		G1-7	CANBY, KLAMATH FALLS (DESTINATION)	114 x 36		14.3, 14.3			1	1	137.6
			G28-1	CALIFORNIA 139 (STATE ROUTE MARKER)	24 x 18							
		M6-4	G35	(DIRECTIONAL ARROW AUXILIARY)	21 x 15							
	S30-6		G72	LAVA BEDS NAT'L MONUMENT	120 x 30			13.0, 14.0		1	1	342.1
			G1-1	MEDICINE LAKE (DESTINATION)	120 x 18							
		RM-010		(CAMPING TENT)	24 x 24							
		RW-080		(BOAT LAUNCHING RAMP)	24 x 24							
	S30-7	M3-1	G47	NORTH (NORTH)	24 x 12	9.0			1		1	73.4
			G28-2	CALIFORNIA 139 (STATE ROUTE SHIELD)	28 x 25							
PD-31	S31-1		G1-1	TIONESTA (DESTINATION)	96 x 18	8.2, 9.2				1	1	230.7
		D9-7		(FUEL SYMBOL)	24 x 24							
		D9-3a		(CAMPING TRAILER SYMBOL)	24 x 24							
		D9-9		(LODGING SYMBOL)	24 x 24							
								TOTAL	3	13	16	3239

SIGN QUANTITIES

SQ-1

REVISED BY | DATE REVISED

AUSTIN BUIST | TOBY CRAWFORD

CALCULATED-DESIGNED BY | CHECKED BY

FUNCTIONAL SUPERVISOR | STEVE TOPAL

STATE OF CALIFORNIA - DEPARTMENT OF TRANSPORTATION

Caltrans® DESIGN

P:\proj1\02\4E440_plans\pse\24e440oc001.dgn

LAST REVISION 04-27-15 | DATE PLOTTED => 24-JUN-2015 | TIME PLOTTED => 11:22

Dist	COUNTY	ROUTE	POST MILES TOTAL PROJECT	SHEET No.	TOTAL SHEETS
02	Mod	139	R10.7/28.0	123	149

REGISTERED CIVIL ENGINEER 06-15-15 DATE

06-15-15
PLANS APPROVAL DATE

REGISTERED PROFESSIONAL ENGINEER AUSTIN V. BUIST No. C77412 Exp. 6-30-17 CIVIL STATE OF CALIFORNIA

THE STATE OF CALIFORNIA OR ITS OFFICERS OR AGENTS SHALL NOT BE RESPONSIBLE FOR THE ACCURACY OR COMPLETENESS OF SCANNED COPIES OF THIS PLAN SHEET.

ABBREVIATIONS:

RSXI RETROREFLECTIVE SHEETING (TYPE XI)

Retr RETROREFLECTIVE

ROADSIDE SIGN PANEL QUANTITIES

SHEET NUMBER	SIGN NUMBER	SIGN CODE		SIGN MESSAGE (DESCRIPTION)	SIGN PANEL SIZE (W x H)	SIGN PANEL AREA	BACKGROUND		LEGEND		PROTECTIVE OVERLAY	FURNISH SINGLE SHEET ALUMINUM SIGN FOR RSXI			RETRO-REFLECTIVE SHEETING (TYPE XI)
							SHEETING COLOR	Retr ASTM TYPE	SHEETING COLOR	Retr ASTM TYPE		UNFRAMED	FRAMED		
		FEDERAL	CALIFORNIA								PREMIUM	0.063"	0.063"	0.080"	
					INCHES	SQFT						SQFT	SQFT	SQFT	SQFT
PD-1	S1-1	M3-1	G47	NORTH (NORTH)	24 x 12	2.00	GREEN	XI	WHITE	XI		2.00			2.00
			G28-2	CALIFORNIA 139 (STATE ROUTE SHIELD)	28 x 25	4.86	GREEN	XI	WHITE	XI		4.86			4.86
PD-11	S11-1		G22	LOOKOUT TURNOFF 1/4 MILE (ADVANCE TURN)	72 x 48	28.00	GREEN	XI	WHITE	XI	X		28.0		28.0
	S11-2	D1-2a	G1-4	LOOKOUT, BIEBER (DESTINATION)	84 x 30	17.50	GREEN	XI	WHITE	XI	X			17.5	17.5
			G66-56	(STAA TRUCK TERMINAL ACCESS)	24 x 24	4.00	BLUE	XI	WHITE	XI		4.00			4.00
		M6-3	G36	(DIRECTIONAL ARROW AUXILIARY)	21 x 15	2.19	BLUE	XI	WHITE	XI		2.19			2.19
PD-12	S12-1	D2-3	G5	CANBY, ALTURAS, SUSANVILLE (DISTANCE)	84 x 42	28.00	GREEN	XI	WHITE	XI	X			28.0	28.0
	S12-2		G1-13	TULELAKE, KLAMATH FALLS, CANBY (DESTINATION)	114 x 48	38.00	GREEN	XI	WHITE	XI	X			38.0	38.0
			G28-1	CALIFORNIA 139 (STATE ROUTE MARKER)	24 x 18	3.00	GREEN	XI	WHITE	XI		3.00			3.00
		M6-4	G35	(DIRECTIONAL ARROW AUXILIARY)	21 x 15	2.19	GREEN	XI	WHITE	XI		2.19			2.19
	S12-3	D1-2a	G1-4	LOOKOUT, BIEBER (DESTINATION)	84 x 30	17.50	GREEN	XI	WHITE	XI	X			17.5	17.5
			G66-56	(STAA TRUCK TERMINAL ACCESS)	24 x 24	4.00	BLUE	XI	WHITE	XI		4.00			4.00
		M6-3	G36	(DIRECTIONAL ARROW AUXILIARY)	21 x 15	2.19	BLUE	XI	WHITE	XI		2.19			2.19
	S12-4		G22	LOOKOUT TURNOFF 1/4 MILE (ADVANCE TURN)	72 x 48	28.00	GREEN	XI	WHITE	XI	X		28.0		28.0
	S12-5		G5	TULELAKE, KLAMATH FALLS (DISTANCE)	96 x 30	20.00	GREEN	XI	WHITE	XI	X			20.0	20.0
PD-30	S30-1		G5	CANBY, ALTURAS, SUSANVILLE (DISTANCE)	84 x 42	24.50	GREEN	XI	WHITE	XI	X			24.5	24.5
	S30-2		G1-1	TIONESTA (DESTINATION)	96 x 18	12.00	GREEN	XI	WHITE	XI	X			12.0	12.0
		D9-7		(FUEL SYMBOL)	24 x 24	4.00	BLUE	XI	WHITE	XI		4.00			4.00
		D9-3a		(CAMPING TRAILER SYMBOL)	24 x 24	4.00	BLUE	XI	WHITE	XI		4.00			4.00
		D9-9		(LODGING SYMBOL)	24 x 24	4.00	BLUE	XI	WHITE	XI		4.00			4.00
	S30-3		G72	LAVA BEDS NAT'L MONUMENT	120 x 30	25.00	BROWN	XI	WHITE	XI	X			25.0	25.0
			G1-1	MEDICINE LAKE (DESTINATION)	120 x 18	15.00	BROWN	XI	WHITE	XI	X			15.0	15.0
		RM-010		(CAMPING TENT)	24 x 24	4.00	BROWN	XI	WHITE	XI		4.00			4.00
		RW-080		(BOAT LAUNCHING RAMP)	24 x 24	4.00	BROWN	XI	WHITE	XI		4.00			4.00
	S30-4	M3-3	G48	SOUTH (SOUTH)	24 x 12	2.00	GREEN	XI	WHITE	XI		2.00			2.00
			G28-2	CALIFORNIA 139 (STATE ROUTE SHIELD)	28 x 25	4.86	GREEN	XI	WHITE	XI		4.86			4.86
	S30-5		G1-7	CANBY, KLAMATH FALLS (DESTINATION)	114 x 36	9.63	GREEN	XI	WHITE	XI	X			28.5	28.5
			G28-1	CALIFORNIA 139 (STATE ROUTE MARKER)	24 x 18	3.00	GREEN	XI	WHITE	XI		3.00			3.00
		M6-4	G35	(DIRECTIONAL ARROW AUXILIARY)	21 x 15	2.19	GREEN	XI	WHITE	XI		2.19			2.19
	S30-6		G72	LAVA BEDS NAT'L MONUMENT	120 x 30	25.00	BROWN	XI	WHITE	XI	X			25.0	25.0
			G1-1	MEDICINE LAKE (DESTINATION)	120 x 18	15.00	BROWN	XI	WHITE	XI	X			15.0	15.0
		RM-010		(CAMPING TENT)	24 x 24	4.00	BROWN	XI	WHITE	XI		4.00			4.00
		RW-080		(BOAT LAUNCHING RAMP)	24 x 24	4.00	BROWN	XI	WHITE	XI		4.00			4.00
	S30-7	M3-1	G47	NORTH (NORTH)	24 x 12	2.00	GREEN	XI	WHITE	XI		2.00			2.00
			G28-2	CALIFORNIA 139 (STATE ROUTE SHIELD)	28 x 25	4.86	GREEN	XI	WHITE	XI		4.86			4.86
PD-31	S31-1		G1-1	TIONESTA (DESTINATION)	96 x 18	12.00	GREEN	XI	WHITE	XI	X			12.0	12.0
		D9-7		(FUEL SYMBOL)	24 x 24	4.00	BLUE	XI	WHITE	XI		4.00			4.00
		D9-3a		(CAMPING TRAILER SYMBOL)	24 x 24	4.00	BLUE	XI	WHITE	XI		4.00			4.00
		D9-9		(LODGING SYMBOL)	24 x 24	4.00	BLUE	XI	WHITE	XI		4.00			4.00
											TOTAL	83.34	56.0	278.0	417.34

SIGN QUANTITIES

SQ-2

REVISED BY | DATE REVISED

AUSTIN BUIST | TOBY CRAWFORD

CALCULATED-DESIGNED BY | CHECKED BY

FUNCTIONAL SUPERVISOR | STEVE TOPAL

STATE OF CALIFORNIA - DEPARTMENT OF TRANSPORTATION

Caltrans DESIGN

P:\proj1\02\4E440_plans\pse\24e440oc002.dgn

LAST REVISION 04-27-15 | DATE PLOTTED => 24-JUN-2015 | TIME PLOTTED => 11:22

Dist	COUNTY	ROUTE	POST MILES TOTAL PROJECT	SHEET No.	TOTAL SHEETS
02	Mod	139	R10.7/28.0	124	149

REGISTERED CIVIL ENGINEER 06-15-15 DATE

06-15-15
PLANS APPROVAL DATE

REGISTERED PROFESSIONAL ENGINEER TOBY J. CRAWFORD No. C71138 Exp. 6-30-17 CIVIL STATE OF CALIFORNIA

THE STATE OF CALIFORNIA OR ITS OFFICERS OR AGENTS SHALL NOT BE RESPONSIBLE FOR THE ACCURACY OR COMPLETENESS OF SCANNED COPIES OF THIS PLAN SHEET.

ABBREVIATION:

FDR-FA FULL DEPTH RECLAMATION-FOAMED ASPHALT

SAFETY EDGE

SHEET No.	STATION ("A1")	DIRECTION	(N) TOTAL THICKNESS OF SAFETY EDGE	(N) LENGTH OF SAFETY EDGE	* HOT MIX ASPHALT (TYPE A)	* RUBBERIZED HOT MIX ASPHALT (GAP GRADED)
			LF	LF	TON	TON
L-1 TO L-8	589+20 TO 692+74	SB	0.40	10,354	86.1	26.0
L-8 TO L-10	693+94 TO 724+22	SB	0.40	3028	25.2	7.6
L-10 TO L-19	726+53 TO 865+43	SB	0.40	13,890	115.5	34.9
L-19 TO L-23	867+19 TO 915+05	SB	0.40	4786	39.8	12.0
L-23 TO L-25	916+84 TO 951+51	SB	0.40	3467	28.8	8.7
L-25 TO L-30	952+58 TO 1021+06	SB	0.40	6848	56.9	17.2
L-30 TO L-32	1021+97 TO 1048+92	SB	0.40	2695	22.4	6.8
L-32	1050+10 TO 1054+17	SB	0.40	407	3.4	1.0
L-33 TO L-34	1067+88 TO 1082+07	SB	0.40	1419	11.8	3.6
L-34 TO L-37	1083+04 TO 1127+77	SB	0.40	4473	37.2	11.2
L-37 TO L-40	1128+46 TO 1171+97	SB	0.40	4351	36.2	10.9
L-40 TO L-42	1173+53 TO 1193+77	SB	0.40	2024	16.8	5.1
L-42	1194+67 TO 1195+85	SB	0.40	118	1.0	0.3
L-42 TO L-44	1196+99 TO 1221+92	SB	0.40	2493	20.7	6.3
L-44 TO L-46	1226+45 TO 1253+37	SB	0.40	2692	22.4	6.8
L-46 TO L-49	1255+13 TO 1305+89	SB	0.40	5076	42.2	12.8
L-49 TO L-55	1306+59 TO 1394+48	SB	0.40	8789	73.1	22.1
L-55	1395+31 TO 1397+24	SB	0.40	193	1.6	0.5
L-55 TO L-57	1397+86 TO 1426+55	SB	0.40	2869	23.9	7.2
L-57 TO L-60	1427+18 TO 1470+84	SB	0.40	4368	36.3	11.0
L-60 TO L-61	1473+36 TO 1478+40	SB	0.40	504	4.2	1.3
L-1 TO L-8	589+20 TO 692+74	NB	0.40	10,354	86.1	26.0
L-8 TO L-10	693+94 TO 724+22	NB	0.40	3028	25.2	7.6
L-10 TO L-16	726+43 TO 811+26	NB	0.40	8483	70.5	21.3
		SUB TOTAL 1		106,709	887.3	268.2

SAFETY EDGE (CONTINUED)

SHEET No.	STATION ("A1")	DIRECTION	(N) TOTAL THICKNESS OF SAFETY EDGE	(N) LENGTH OF SAFETY EDGE	* HOT MIX ASPHALT (TYPE A)	* RUBBERIZED HOT MIX ASPHALT (GAP GRADED)
			LF	LF	TON	TON
L-16 TO L-21	812+57 TO 883+25	NB	0.40	7068	58.8	17.8
L-21 TO L-22	889+00 TO 904+54	NB	0.40	1554	12.9	3.9
L-22 TO L-26	906+31 TO 955+04	NB	0.40	4873	40.5	12.2
L-26 TO L-29	956+05 TO 1011+10	NB	0.40	5505	45.8	13.8
L-30 TO L-32	1016+30 TO 1045+00	NB	0.40	2870	23.9	7.2
L-32 TO L-33	1054+00 TO 1060+97	NB	0.40	697	5.8	1.8
L-33 TO L-37	1063+53 TO 1122+22	NB	0.40	5869	48.8	14.7
L-37 TO L-39	1122+99 TO 1146+47	NB	0.40	2348	19.5	5.9
L-39 TO L-40	1148+37 TO 1166+83	NB	0.40	1846	15.3	4.6
L-40	1167+51 TO 1171+97	NB	0.40	446	3.7	1.1
L-40 TO L-42	1173+53 TO 1195+32	NB	0.40	2179	18.1	5.5
L-42 TO L-43	1200+03 TO 1208+75	NB	0.40	872	7.3	2.2
L-43	1209+42 TO 1217+05	NB	0.40	763	6.3	1.9
L-43 TO L-44	1217+54 TO 1220+45	NB	0.40	291	2.4	0.7
L-44	1221+79 TO 1223+15	NB	0.40	136	1.1	0.3
L-44 TO L-46	1223+89 TO 1253+37	NB	0.40	2948	24.5	7.4
L-46 TO L-48	1255+13 TO 1288+13	NB	0.40	3300	27.4	8.3
L-48 TO L-50	1289+58 TO 1310+87	NB	0.40	2129	17.7	5.4
L-50 TO L-55	1311+66 TO 1393+08	NB	0.40	8142	67.7	20.5
L-55 TO L-61	1394+92 TO 1478+40	NB	0.40	8348	69.4	21.0
		SUB TOTAL 2		62,184	516.9	156.2
		SUB TOTAL 1		106,709	887.3	268.2
		TOTAL		168,893	1404.2	424.4

* INCLUDED IN ROADWAY QUANTITIES TABLE

ROADWAY QUANTITIES

LOCATION	TEMPORARY CHECK DAM	TEMPORARY FIBER ROLL	TEMPORARY FENCE (TYPE ESA)	REMOVE ASPHALT CONCRETE DIKE	COLD PLANE ASPHALT CONCRETE PAVEMENT	ROADWAY EXCAVATION	SHOULDER BACKING	CLASS 2 AGGREGATE BASE (CY)	FDR-FA	ASPHALTIC EMULSION (FDR-FA)	ASPHALT BINDER (FDR-FA)	CEMENT (FDR-FA)	HOT MIX ASPHALT (TYPE A)	RUBBERIZED HOT MIX ASPHALT (GAP GRADED)	PLACE HOT MIX ASPHALT DIKE (TYPE E)	PLACE HOT MIX ASPHALT (MISCELLANEOUS AREA)	TACK COAT	COMMENTS
	LF	LF	LF	LF	SQYD	CY	TON	CY	SQYD	TON	TON	TON	TON	TON	LF	SQYD	TON	
587+60 TO 1480+00	800	2500	11,217		1235		14,400		327,000	110	4870	2440	47,000	47,160			136	ROADWAY CONSTRUCTION
589+20 TO 1478+40													1410	430				SAFETY EDGE
VARIOUS, SEE SHEET C-2					3125	70		40					620				1.3	DRIVEWAYS, ROAD CONNECTIONS
VARIOUS, SEE SHEET C-1						1,520		1190					1640				1.9	PULLOUTS/CHAIN-ON
VARIOUS, SEE LAYOUTS				2000									60		2000	1130		REPLACE DIKE
TOTAL	800	2500	11,217	2000	4360	1,590	14,400	1230	327,000	110	4870	2440	50,730	47,590	2000	1130	139.2	

SUMMARY OF QUANTITIES

Q-1

REVISED BY | DATE REVISED
TOBY CRAWFORD | AUSTIN BUIST
CALCULATED-DESIGNED BY | CHECKED BY
FUNCTIONAL SUPERVISOR
STEVE TOPAL

STATE OF CALIFORNIA - DEPARTMENT OF TRANSPORTATION
Caltrans DESIGN

P:\proj1\02\4E440_plans\pse\24e440pa001.dgn

LAST REVISION 06-04-15 | DATE PLOTTED => 24-JUN-2015 | TIME PLOTTED => 11:22

Dist	COUNTY	ROUTE	POST MILES TOTAL PROJECT	SHEET No.	TOTAL SHEETS
02	Mod	139	R10.7/28.0	125	149

REGISTERED CIVIL ENGINEER 06-15-15 DATE

06-15-15
PLANS APPROVAL DATE

REGISTERED PROFESSIONAL ENGINEER TOBY J. CRAWFORD No. C71138 Exp. 6-30-17 CIVIL STATE OF CALIFORNIA

THE STATE OF CALIFORNIA OR ITS OFFICERS OR AGENTS SHALL NOT BE RESPONSIBLE FOR THE ACCURACY OR COMPLETENESS OF SCANNED COPIES OF THIS PLAN SHEET.

NOTE:

1. (N) - NOT A SEPARATE PAY ITEM, FOR INFORMATION ONLY.
2. SEE TYPICAL CROSS SECTIONS FOR CASE DETAILS.

COLD PLANE (GRADE CORRECTION)

LOCATION			CASE	COLD PLANE (GRADE CORRECTION)	(N) Approx CUT SURPLUS	(N) Approx FILL DIFFICIENCY
				SQYD	CY	CY
589+20	TO	590+00	1			
590+00	TO	596+00	2	2133	58	
596+00	TO	598+00	1			
598+00	TO	600+00	2	711	22	
600+00	TO	603+00	1			
603+00	TO	605+00	3			20
605+00	TO	612+00	1			
612+00	TO	614+00	2	711	21	
614+00	TO	617+00	1			
617+00	TO	632+00	2	5333	184	
623+00	TO	633+00	1			
633+00	TO	636+00	3			32
636+00	TO	637+00	1			
637+00	TO	645+00	2	2844	151	
645+00	TO	654+00	1			
654+00	TO	659+00	2	1778	89	
659+00	TO	668+00	1			
668+00	TO	688+00	2	7111	175	
688+00	TO	694+00	1			
694+00	TO	698+00	2	1422	42	
698+00	TO	703+00	1			
703+00	TO	707+00	2	1422	37	
707+00	TO	715+00	1			
715+00	TO	721+00	2	2133	52	
721+00	TO	725+00	1			
725+00	TO	730+00	3			128
730+00	TO	736+00	1			
736+00	TO	751+00	2	5333	170	
751+00	TO	752+00	1			
752+00	TO	758+00	3			135
758+00	TO	759+00	1			
759+00	TO	770+00	2	3911	314	
770+00	TO	771+00	1			
771+00	TO	775+00	3			118
775+00	TO	776+00	1			
776+00	TO	779+00	2	1067	57	
779+00	TO	782+00	1			
782+00	TO	785+00	2	1067	41	
785+00	TO	787+00	1			
787+00	TO	807+00	2	7111	361	
807+00	TO	809+00	1			
809+00	TO	818+00	2	3200	205	
818+00	TO	824+00	1			
824+00	TO	830+00	2	2133	54	
830+00	TO	832+00	1			
832+00	TO	838+00	3			108
838+00	TO	841+00	2	1067	75	
841+00	TO	843+00	1			
843+00	TO	877+00	2	12,089	790	
877+00	TO	883+00	1			
883+00	TO	894+00	2	3911	274	
894+00	TO	896+00	3			27
896+00	TO	905+00	2	3200	232	
905+00	TO	908+00	1			
908+00	TO	922+00	2	4978	337	
SUB TOTAL 1				74,665	3741	568

COLD PLANE (GRADE CORRECTION) (CONTINUED)

LOCATION			CASE	COLD PLANE (GRADE CORRECTION)	(N) Approx CUT SURPLUS	(N) Approx FILL DIFFICIENCY
				SQYD	CY	CY
922+00	TO	936+00	1			
936+00	TO	945+00	2	3200	83	
945+00	TO	948+00	1			
948+00	TO	950+00	2	711	18	
950+00	TO	953+00	1			
953+00	TO	955+00	3			21
955+00	TO	962+00	1			
962+00	TO	969+00	2	2489	68	
969+00	TO	973+00	1			
973+00	TO	994+00	2	7467		
994+00	TO	1001+00	1			
1001+00	TO	1008+00	2	2489	90	
1008+00	TO	1009+00	1			
1009+00	TO	1013+00	3			49
1013+00	TO	1015+00	1			
1015+00	TO	1025+00	2	3556	139	
1025+00	TO	1033+00	1			
1033+00	TO	1035+00	3			24
1035+00	TO	1038+00	1			
1038+00	TO	1042+00	2	1422	43	
1042+00	TO	1043+00	1			
1043+00	TO	1045+00	3			18
1045+00	TO	1049+00	1			
1049+00	TO	1055+00	2	2133	110	
1055+00	TO	1057+00	1			
1057+00	TO	1063+00	3			87
1063+00	TO	1065+00	1			
1065+00	TO	1069+00	2	1422	60	
1069+00	TO	1073+00	3			86
1073+00	TO	1081+00	2	2844	90	
1081+00	TO	1085+00	1			
1085+00	TO	1090+00	2	1778	47	
1090+00	TO	1096+00	1			
1096+00	TO	1100+00	2	1422	120	
1100+00	TO	1101+00	1			
1101+00	TO	1110+00	3			128
1110+00	TO	1112+00	2	711	18	
1112+00	TO	1117+00	1			
1117+00	TO	1120+00	3			45
1120+00	TO	1123+00	1			
1123+00	TO	1124+00	2	356	12	
1124+00	TO	1127+00	1			
1127+00	TO	1130+00	3			53
1130+00	TO	1131+00	1			
1131+00	TO	1135+00	2	1422	105	
SUB TOTAL 2				33,422	1003	511

SUMMARY OF QUANTITIES

Q-2

STATE OF CALIFORNIA - DEPARTMENT OF TRANSPORTATION
DESIGN
Caltrans
FUNCTIONAL SUPERVISOR: STEVE TOPAL
CALCULATED-DESIGNED BY: TOBY CRAWFORD
CHECKED BY: AUSTIN BUIST
REVISED BY
DATE REVISED
P:\proj1\02\4E440_plans\pse\24e440pa002.dgn

LAST REVISION 05-06-15
DATE PLOTTED => 24-JUN-2015
TIME PLOTTED => 11:22

Dist	COUNTY	ROUTE	POST MILES TOTAL PROJECT	SHEET No.	TOTAL SHEETS
02	Mod	139	R10.7/28.0	126	149

REGISTERED CIVIL ENGINEER 06-15-15 DATE

06-15-15
PLANS APPROVAL DATE

REGISTERED PROFESSIONAL ENGINEER TOBY J. CRAWFORD No. C71138 Exp. 6-30-17 CIVIL STATE OF CALIFORNIA

THE STATE OF CALIFORNIA OR ITS OFFICERS OR AGENTS SHALL NOT BE RESPONSIBLE FOR THE ACCURACY OR COMPLETENESS OF SCANNED COPIES OF THIS PLAN SHEET.

NOTE:

1. (N) - NOT A SEPARATE PAY ITEM, FOR INFORMATION ONLY.
2. SEE TYPICAL CROSS SECTIONS FOR CASE DETAILS.

COLD PLANE (GRADE CORRECTION) (CONTINUED)

LOCATION			CASE	COLD PLANE (GRADE CORRECTION)	(N) Approx CUT SURPLUS	(N) Approx FILL DEFICIENCY
				SQYD	CY	CY
1135+00	TO	1136+00	1			
1136+00	TO	1140+00	3			86
1140+00	TO	1143+00	2	1067	75	
1143+00	TO	1155+00	3			315
1155+00	TO	1167+00	2	4267	143	
1167+00	TO	1169+00	1			
1169+00	TO	1172+00	3			42
1172+00	TO	1175+00	2	1067	20	
1175+00	TO	1179+00	1			
1179+00	TO	1182+00	3			65
1182+00	TO	1183+00	1			
1183+00	TO	1185+00	2	711	72	
1185+00	TO	1186+00	1			
1186+00	TO	1189+00	3			72
1189+00	TO	1197+00	2	2844	195	
1197+00	TO	1199+00	3			30
1199+00	TO	1201+00	2	711	24	
1201+00	TO	1205+00	1			
1205+00	TO	1206+00	3			22
1206+00	TO	1207+00	1			
1207+00	TO	1215+00	2	2844	316	
1215+00	TO	1216+00	1			
1216+00	TO	1218+00	3			36
1218+00	TO	1227+00	2	3200	307	
1227+00	TO	1230+00	3			41
1230+00	TO	1232+00	1			
1232+00	TO	1240+00	3			122
1240+00	TO	1241+00	1			
1241+00	TO	1242+00	2	356	14	
1242+00	TO	1246+00	1			
1246+00	TO	1256+00	3			194
1256+00	TO	1257+00	2	356	9	
1257+00	TO	1258+00	1			
1258+00	TO	1263+00	3			108
1263+00	TO	1264+00	2	356	6	
1264+00	TO	1265+00	1			
1265+00	TO	1275+00	3			186
1275+00	TO	1278+00	2	1067	30	
1278+00	TO	1290+00	1			
1290+00	TO	1302+00	3			166
1302+00	TO	1304+00	1			
1304+00	TO	1309+00	2	1778	74	
1309+00	TO	1314+00	1			
1314+00	TO	1316+00	2	711	27	
1316+00	TO	1319+00	1			
1319+00	TO	1326+00	2	2489	91	
1326+00	TO	1329+00	3			27
1329+00	TO	1335+00	1			
1335+00	TO	1337+00	3			16
1337+00	TO	1339+00	1			
1339+00	TO	1362+00	2	8178	335	
1362+00	TO	1365+00	1			
1365+00	TO	1367+00	2	711	17	
1367+00	TO	1376+00	1			
1376+00	TO	1383+00	2	2489	96	
SUB TOTAL 3				35,202	1851	1528

COLD PLANE (GRADE CORRECTION) (CONTINUED)

LOCATION			CASE	COLD PLANE (GRADE CORRECTION)	(N) Approx CUT SURPLUS	(N) Approx FILL DEFICIENCY
				SQYD	CY	CY
1383+00	TO	1388+00	1			
1388+00	TO	1390+00	3			23
1390+00	TO	1391+00	1			
1391+00	TO	1394+00	2	1067	55	
1394+00	TO	1402+00	3			194
1402+00	TO	1405+00	1			
1405+00	TO	1407+00	3			21
1407+00	TO	1412+00	2	1778	133	
1412+00	TO	1416+00	1			
1416+00	TO	1417+00	3			12
1417+00	TO	1418+00	1			
1418+00	TO	1422+00	2	1422	53	
1422+00	TO	1424+00	1			
1424+00	TO	1428+00	2	1422	58	
1428+00	TO	1429+00	1			
1429+00	TO	1437+00	3			155
1437+00	TO	1438+00	1			
1438+00	TO	1442+00	2	1422	56	
1442+00	TO	1443+00	1			
1443+00	TO	1445+00	3			40
1445+00	TO	1447+00	2	711	32	
1447+00	TO	1451+00	3			100
1451+00	TO	1453+00	1			
1453+00	TO	1455+00	2	711	19	
1455+00	TO	1457+00	1			
1457+00	TO	1472+00	2	5333	180	
1472+00	TO	1475+00	3			28
1475+00	TO	1478+40	1			
SUB TOTAL 4				13,866	586	573
SUB TOTAL 3				35,202	1851	1528
SUB TOTAL 2				33,422	1003	511
SUB TOTAL 1				74,665	3741	568
TOTAL				157,155	7181	3180

SUMMARY OF QUANTITIES

Q-3

REVISED BY | DATE REVISED
TOBY CRAWFORD | AUSTIN BUIST
CALCULATED-DESIGNED BY | CHECKED BY
FUNCTIONAL SUPERVISOR
STEVE TOPAL

STATE OF CALIFORNIA - DEPARTMENT OF TRANSPORTATION
Caltrans
DESIGN

P:\proj1\02\4E440_plans\pse\24e440pa003.dgn

LAST REVISION 05-06-15 | DATE PLOTTED => 24-JUN-2015 | TIME PLOTTED => 11:22

Dist	COUNTY	ROUTE	POST MILES TOTAL PROJECT	SHEET No.	TOTAL SHEETS
02	Mod	139	R10.7/28.0	127	149

LICENSED LANDSCAPE ARCHITECT

06-15-15
PLANS APPROVAL DATE

LICENSED LANDSCAPE ARCHITECT J. PATRICK SULLIVAN #3125 Signature 07/31/16 Renewal Date 06/15/15 Date STATE OF CALIFORNIA

THE STATE OF CALIFORNIA OR ITS OFFICERS OR AGENTS SHALL NOT BE RESPONSIBLE FOR THE ACCURACY OR COMPLETENESS OF SCANNED COPIES OF THIS PLAN SHEET.

NOTE:

1.SEE SUMMARY OF QUANTITIES SHEET FOR HYDROSEEDING QUANTITIES AND APPLICATION RATES.

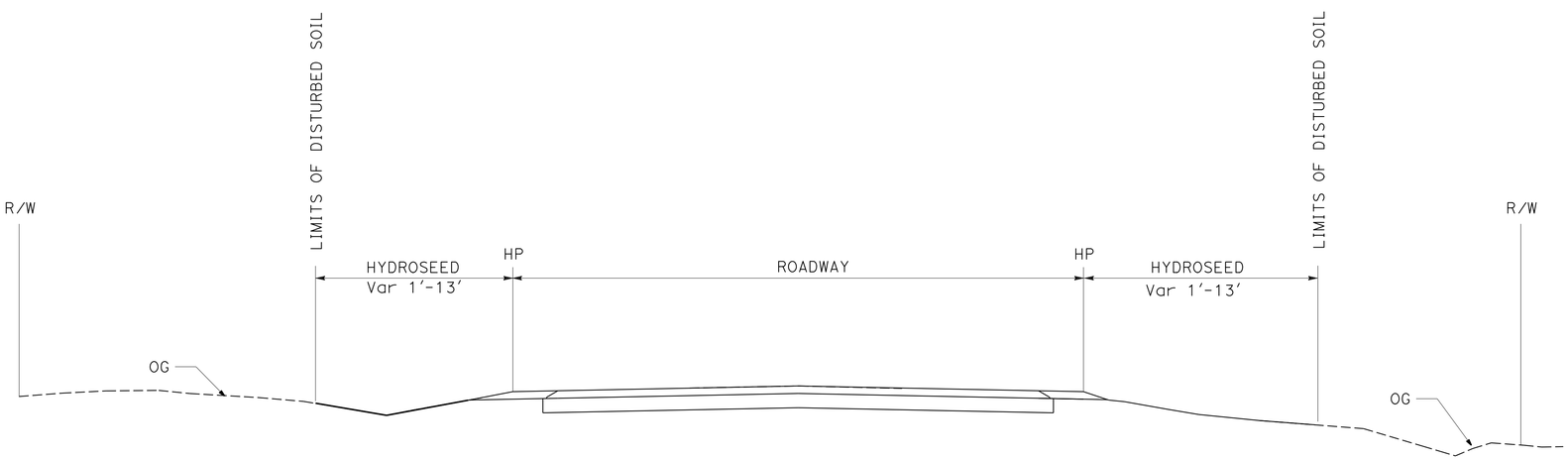

ROUTE 139

CONSTRUCTION WITHIN ALIGNMENT
"A1" 589+20 TO "A1" 1478+40

DISTURBED AREAS

	ACRE
"A1" 589+20 TO "A1" 1478+40	33.0
TOTAL	33.0

EROSION CONTROL DETAILS

NO SCALE

ECD-1

REVISED BY | DATE REVISED
J. PATRICK SULLIVAN | RON FLORY
CALCULATED-DESIGNED BY | CHECKED BY
SENIOR LANDSCAPE ARCHITECT | RON FLORY
STATE OF CALIFORNIA - DEPARTMENT OF TRANSPORTATION
Caltrans® LANDSCAPE ARCHITECTURE

P:\proj1\02\4E440_plans\pse\24e440tf001.dgn

LAST REVISION 06-15-15 | DATE PLOTTED => 24-JUN-2015 | TIME PLOTTED => 11:22

Dist	COUNTY	ROUTE	POST MILES TOTAL PROJECT	SHEET No.	TOTAL SHEETS
02	Mod	139	R10.7/28.0	128	149

LICENSED LANDSCAPE ARCHITECT

06-15-15
PLANS APPROVAL DATE

LICENSED LANDSCAPE ARCHITECT J. PATRICK SULLIVAN #3125 Signature 07/31/15 Renewal Date 06/15/15 Date STATE OF CALIFORNIA

THE STATE OF CALIFORNIA OR ITS OFFICERS OR AGENTS SHALL NOT BE RESPONSIBLE FOR THE ACCURACY OR COMPLETENESS OF SCANNED COPIES OF THIS PLAN SHEET.

NOTES:

1. (N) - NOT A SEPARATE PAY ITEM, FOR INFORMATION ONLY.
2. REFER TO EC SHEET CROSS SECTION FOR TYPICAL LOCATIONS, DISTURBED AREA QUANTITIES.
3. APPLY STRAW SUFFICIENTLY TO FULLY COVER SLOPES.
4. TOTAL HYDROSEEDING ACREAGE 33.0 ACRES (N)
5. ALL SLOPE SQFT QUANTITIES INCLUDE SLOPE FACTORING.

HYDROSEED SEQUENCE/ APPLICATION RATES (N)

SEQUENCE	ITEM	MATERIAL		(N) APPLICATION RATE
		DESCRIPTION	TYPE	
STEP 1	HYDROSEED	PURE LIVE SEED	MIX	82 LB/ACRE
		FIBER	ALTERNATE	1200 LB/ACRE
		SLOW RELEASE FERTILIZER	GRANULAR	150 LB/ACRE
STEP 2	STRAW	STRAW	RICE	4.5 TON/ACRE
STEP 3	HYDROSEED	COMPOST	WOOD PRODUCT	1.2 CY/ACRE
		FIBER	ALTERNATE	1000 LB/ACRE
		TACKIFIER	PSYLLIUM	250 LB/ACRE

SEED MIX (N)

BOTANICAL NAME (COMMON NAME)	PERCENT GERMINATION (MINIMUM)	(N) POUNDS PURE LIVE SEED PER ACRE (SLOPE MEASUREMENT)
ACHILLEA MILLEFOLIUM (COMMON YARROW)	50	2
ARTEMESIA TRIDENDATA (BIG BASIN SAGE)	50	10
CHRYSOTHAMNUS NAUSEOSUS (RUBBER RABBITBRUSH)	60	10
ELYMUS ELYMIOIDES (SQUIRREL TAIL WILD RYE)	70	10
FESTUCA IDAHOENSIS (WESTERN FESCUE)	70	25
LOTUS PURSHIANUS (PURSHING)	70	8
LUPINUS BICOLOR (DWARF LUPINES)	60	2
VULPIA MICROSTACHYS (SMALL FESCUE)	80	15
	TOTAL	82

HYDROSEED TOTALS

MATERIAL		(N) TOTALS	
DESCRIPTION	TYPE		
PURE LIVE SEED	MIX	2706 LB	HYDROSEED
FIBER	ALTERNATE	72,600 LB	
SLOW RELEASE FERTILIZER	GRANULAR	4950 LB	
STRAW	RICE	148.5 TONS	
COMPOST	WOOD PRODUCT	39.6 CY	
TACKIFIER	PSYLLIUM	8250 LB	SQFT
FROM Sta "A1" 589+20 TO 1478+40		SUBTOTAL	1,437,480
		TOTAL	1,437,480

EROSION CONTROL QUANTITIES

ECQ-1

REVISED BY | DATE REVISED
J. PATRICK SULLIVAN | RON FLORY
CALCULATED-DESIGNED BY | CHECKED BY
SENIOR LANDSCAPE ARCHITECT | RON FLORY
STATE OF CALIFORNIA - DEPARTMENT OF TRANSPORTATION
Caltrans® LANDSCAPE ARCHITECTURE

P:\proj\02\4E440_plans\pse\24e440tg001.dgn

LAST REVISION 06-15-15 | DATE PLOTTED => 24-JUN-2015 | TIME PLOTTED => 11:22

Dist	COUNTY	ROUTE	POST MILES TOTAL PROJECT	SHEET No.	TOTAL SHEETS
02	Mod	139	R10.7/28.0	129	149

ART 06-15-15
REGISTERED ELECTRICAL ENGINEER DATE

06-15-15
PLANS APPROVAL DATE

REGISTERED PROFESSIONAL ENGINEER A.P. ROBLES No. E15293 Exp. 3-31-17 ELECTRICAL STATE OF CALIFORNIA

THE STATE OF CALIFORNIA OR ITS OFFICERS OR AGENTS SHALL NOT BE RESPONSIBLE FOR THE ACCURACY OR COMPLETENESS OF SCANNED COPIES OF THIS PLAN SHEET.

NOTES:

1. FOR ACCURATE RIGHT OF WAY AND ACCESS DATA, CONTACT RIGHT OF WAY ENGINEERING AT THE DISTRICT OFFICE.
2. REUSE SHOULDER TERMINATIONS.
3. COIL 10′ OF CONDUCTORS IN PULL BOX.

ABBREVIATIONS;

RSS	ROADWAY SURFACE SENSOR
SSS	SUB-SURFACE SENSOR
6SMFO	6 STRAND SINGLE MODE FIBER OPTIC CABLE
SLI	SENSOR LEAD-IN CABLE
TCS	TRAFFIC COUNT STATION

LEGEND:

(pb)	Exist OBJECT MARKER (TYPE PB)
∘	Exist PAVEMENT SENSOR
•	NEW ROADWAY SURFACE SENSOR
✦	NEW ROADWAY SURFACE SENSOR WITH SUB-SURFACE SENSOR

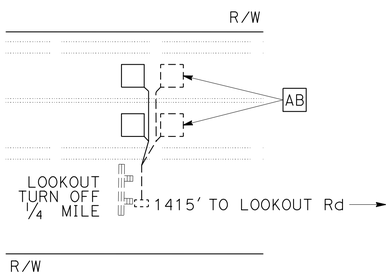

TCS No. 228
PM 17.08

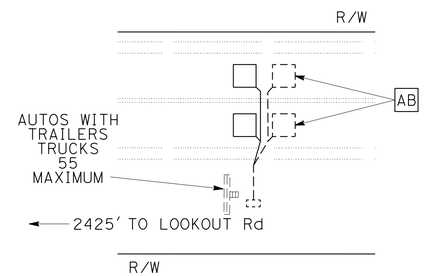

TCS No. 233
PM 17.80

APPROVED FOR ELECTRICAL WORK ONLY

MODIFY TRAFFIC COUNT STATION

NO SCALE

E-1

STATE OF CALIFORNIA - DEPARTMENT OF TRANSPORTATION
Caltrans® **ELECTRICAL DESIGN**

FUNCTIONAL SUPERVISOR: ROB STINGER
CALCULATED-DESIGNED BY: ARTURO P. ROBLES
CHECKED BY: ROB STINGER
REVISED BY
DATE REVISED

P:\proj1\02\4E440_plans\pse\24e440ua001.dgn

LAST REVISION 05-21-15
DATE PLOTTED => 24-JUN-2015
TIME PLOTTED => 11:22

Dist	COUNTY	ROUTE	POST MILES TOTAL PROJECT	SHEET No.	TOTAL SHEETS
02	Mod	139	R10.7/28.0	130	149

ART 06-15-15
REGISTERED ELECTRICAL ENGINEER DATE

06-15-15
PLANS APPROVAL DATE

REGISTERED PROFESSIONAL ENGINEER A.P. ROBLES No. E15293 Exp. 3-31-17 ELECTRICAL STATE OF CALIFORNIA

THE STATE OF CALIFORNIA OR ITS OFFICERS OR AGENTS SHALL NOT BE RESPONSIBLE FOR THE ACCURACY OR COMPLETENESS OF SCANNED COPIES OF THIS PLAN SHEET.

NOTE:

1. FOR ACCURATE RIGHT OF WAY DATA, CONTACT RIGHT OF WAY ENGINEERING AT THE DISTRICT OFFICE.

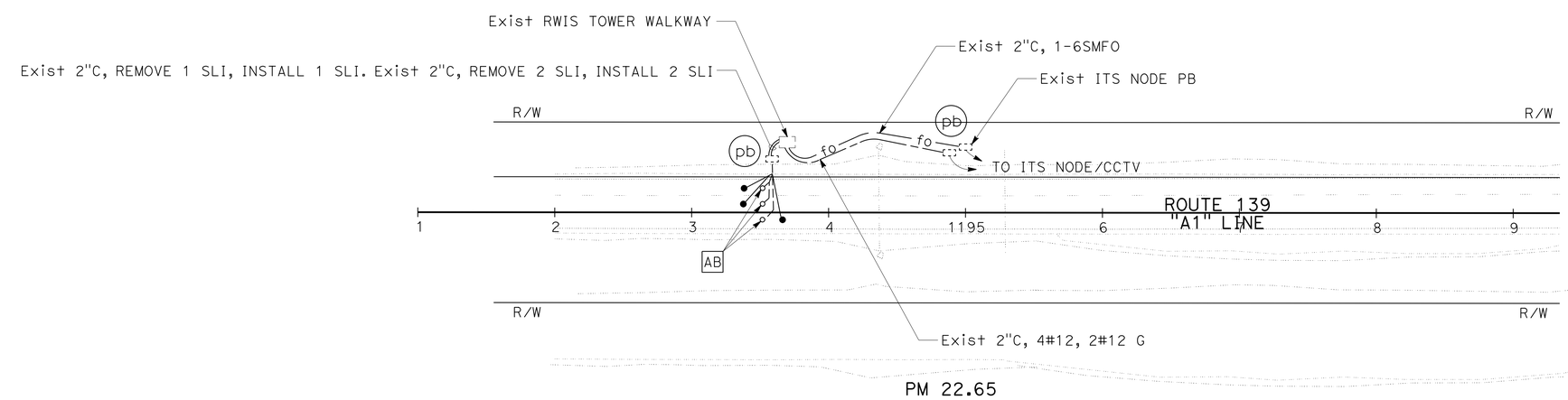

APPROVED FOR ELECTRICAL WORK ONLY

MODIFY ROADSIDE WEATHER INFORMATION SYSTEM

SCALE: 1" = 50'

E-2

STATE OF CALIFORNIA - DEPARTMENT OF TRANSPORTATION
Caltrans® **ELECTRICAL DESIGN**

CALCULATED-DESIGNED BY: ARTURO P. ROBLES
CHECKED BY: ROB STINGER
FUNCTIONAL SUPERVISOR: ROB STINGER
REVISED BY / DATE REVISED

P:\proj1\02\4E440_plans\pse\24e440ua002.dgn

LAST REVISION 05-21-15
DATE PLOTTED => 24-JUN-2015
TIME PLOTTED => 11:22

Dist	COUNTY	ROUTE	POST MILES TOTAL PROJECT	SHEET No.	TOTAL SHEETS
02	Mod	139	R10.7/28.0	131	149

ART 06-15-15
REGISTERED ELECTRICAL ENGINEER DATE

06-15-15
PLANS APPROVAL DATE

REGISTERED PROFESSIONAL ENGINEER A.P. ROBLES No. E15293 Exp. 3-31-17 ELECTRICAL STATE OF CALIFORNIA

THE STATE OF CALIFORNIA OR ITS OFFICERS OR AGENTS SHALL NOT BE RESPONSIBLE FOR THE ACCURACY OR COMPLETENESS OF SCANNED COPIES OF THIS PLAN SHEET.

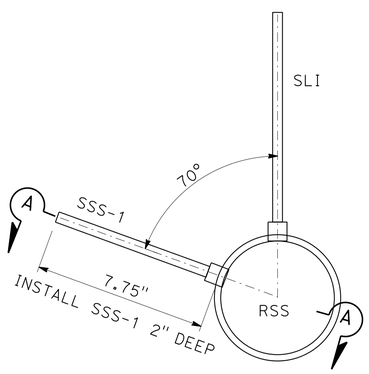

PLAN

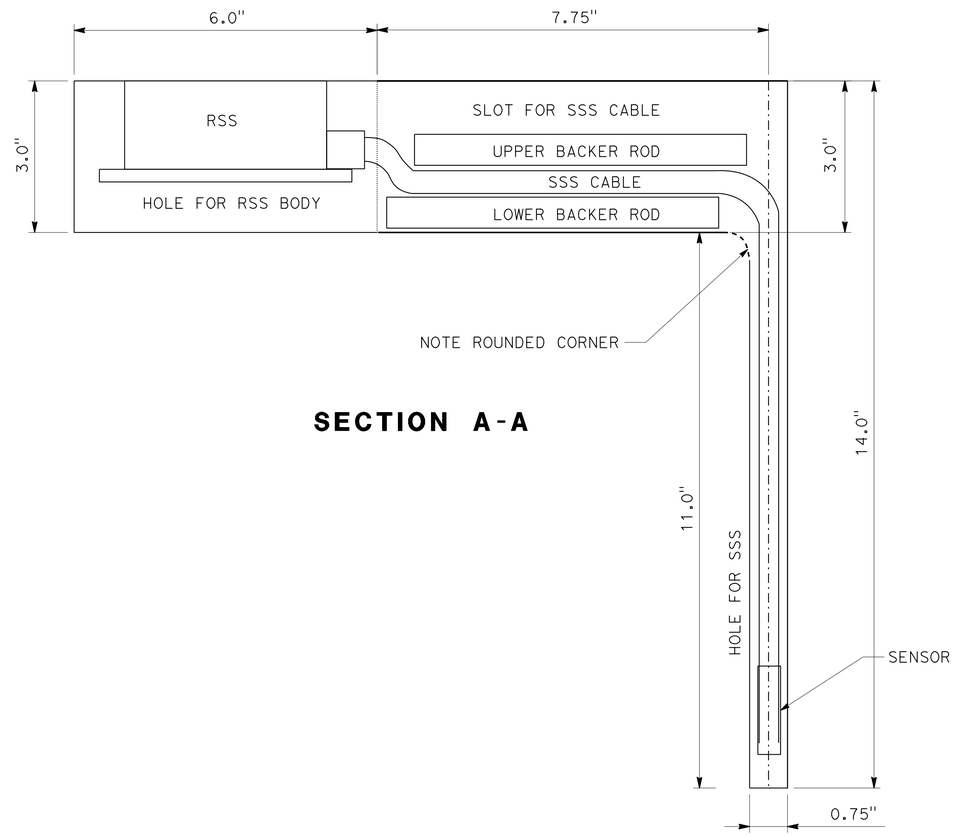

SECTION A-A

ELECTRICAL DETAILS

NO SCALE **E-3**

REVISED BY	DATE REVISED

CALCULATED-DESIGNED BY	ARTURO P. ROBLES
CHECKED BY	ROB STINGER
FUNCTIONAL SUPERVISOR	ROB STINGER

STATE OF CALIFORNIA - DEPARTMENT OF TRANSPORTATION
Caltrans® ELECTRICAL DESIGN

P:\proj1\02\4E440_plans\pse\24e440ua003.dgn

LAST REVISION 05-21-15 | DATE PLOTTED => 24-JUN-2015 | TIME PLOTTED => 11:22

Dist	COUNTY	ROUTE	POST MILES TOTAL PROJECT	SHEET No.	TOTAL SHEETS
02	Mod	139	R10.7/28.0	132	149

ART 06-15-15
REGISTERED ELECTRICAL ENGINEER DATE

06-15-15
PLANS APPROVAL DATE

REGISTERED PROFESSIONAL ENGINEER
A.P. ROBLES
No. E15293
Exp. 3-31-17
ELECTRICAL
STATE OF CALIFORNIA

THE STATE OF CALIFORNIA OR ITS OFFICERS OR AGENTS SHALL NOT BE RESPONSIBLE FOR THE ACCURACY OR COMPLETENESS OF SCANNED COPIES OF THIS PLAN SHEET.

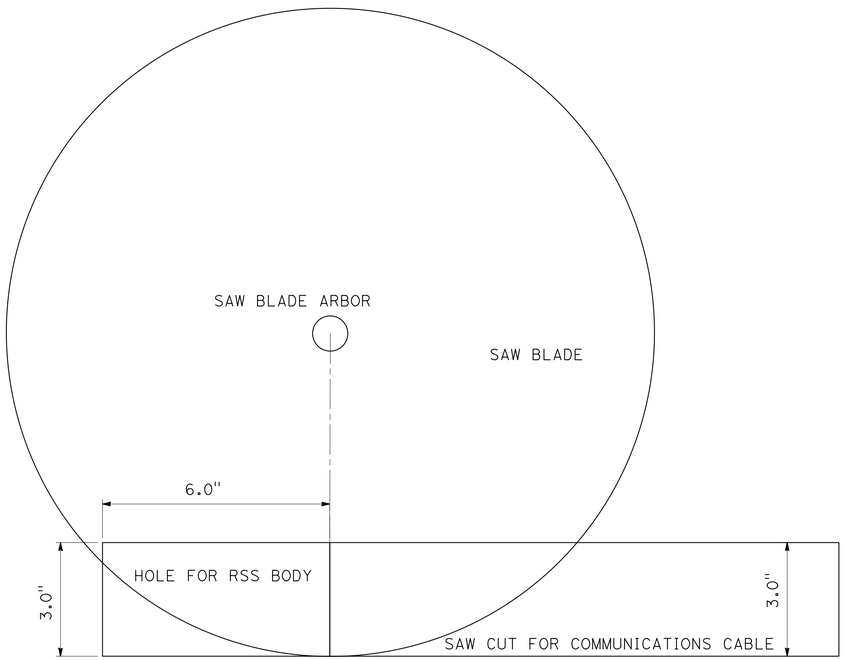

SAW CUT DETAIL

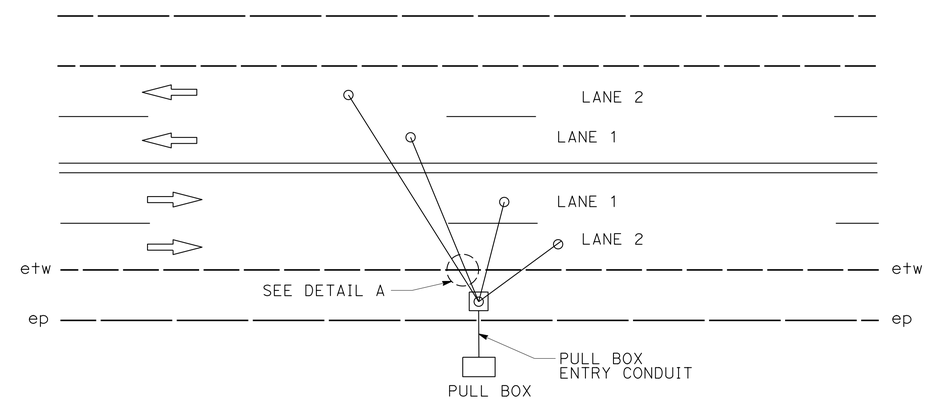

TYPICAL RADIAL SAW CUT DETAIL

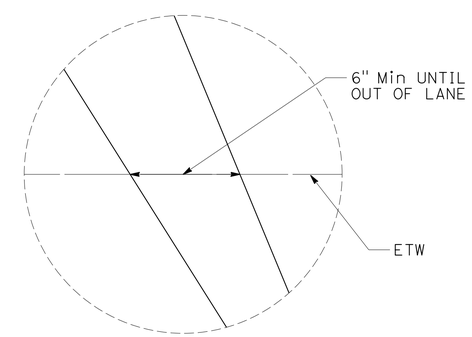

DETAIL A

ELECTRICAL DETAILS

NO SCALE

E-4

STATE OF CALIFORNIA - DEPARTMENT OF TRANSPORTATION
Caltrans® **ELECTRICAL DESIGN**

FUNCTIONAL SUPERVISOR: ROB STINGER
CALCULATED-DESIGNED BY: ARTURO P. ROBLES
CHECKED BY: ROB STINGER
REVISED BY
DATE REVISED

P:\proj\02\4E440_plans\pse\24e440ua004.dgn

LAST REVISION 05-21-15 | DATE PLOTTED => 24-JUN-2015 | TIME PLOTTED => 11:22

Dist	COUNTY	ROUTE	POST MILES TOTAL PROJECT	SHEET No.	TOTAL SHEETS
02	Mod	139	R10.7/28.0	133	149

ART 06-15-15
REGISTERED ELECTRICAL ENGINEER DATE

06-15-15
PLANS APPROVAL DATE

REGISTERED PROFESSIONAL ENGINEER A.P. ROBLES No. E15293 Exp. 3-31-17 ELECTRICAL STATE OF CALIFORNIA

THE STATE OF CALIFORNIA OR ITS OFFICERS OR AGENTS SHALL NOT BE RESPONSIBLE FOR THE ACCURACY OR COMPLETENESS OF SCANNED COPIES OF THIS PLAN SHEET.

NOTE:

(N) - NOT A SEPARATE PAY ITEM. FOR INFORMATION ONLY.

MODIFY TRAFFIC COUNT STATION

SHEET No.	(N) TYPE A LOOP DETECTOR
	EA
E-1	4

MODIFY ROADSIDE WEATHER INFORMATION SYSTEM

SHEET No.	(N) RSS	(N) RSS WITH SSS	(N) SLI
	EA	EA	LF
E-2	2	1	250

MAINTAINING EXISTING TRAFFIC MANAGEMENT SYSTEM ELEMENTS DURING CONSTRUCTION

TYPE	LOCATION	DESCRIPTION
CCTV	Mod-139-22.70	PEREZ INSPECTION STATION
RWIS	Mod-139-22.65	

ELECTRICAL QUANTITIES

E-5

REVISED BY | DATE REVISED
ARTURO P. ROBLES | ROB STINGER
CALCULATED-DESIGNED BY | CHECKED BY
FUNCTIONAL SUPERVISOR: ROB STINGER

STATE OF CALIFORNIA - DEPARTMENT OF TRANSPORTATION
Caltrans ELECTRICAL DESIGN

P:\proj1\02\4E440_plans\pse\24e440ua005.dgn

LAST REVISION 05-21-15 | DATE PLOTTED => 24-JUN-2015 | TIME PLOTTED => 11:22

M

Maint	MAINTENANCE
Max	MAXIMUM
MB	METAL BEAM
MBB	METAL BEAM BARRIER
MBGR	METAL BEAM GUARD RAILING
Med	MEDIAN
MGS	MIDWEST GUARDRAIL SYSTEM
MH	MANHOLE
Min	MINIMUM
Misc	MISCELLANEOUS
Misc I & S	MISCELLANEOUS IRON AND STEEL
Mkr	MARKER
Mod	MODIFIED,
	MODIFY
Mon	MONUMENT
MP	METAL PLATE
MPGR	METAL PLATE GUARD RAILING
MR	MOVEMENT RATING
MSE	MECHANICALLY STABILIZED EMBANKMENT
Mt	MOUNTAIN, MOUNT
Mtl	MATERIAL
MVP	MAINTENANCE VEHICLE PULLOUT

N

N	NORTH
NB	NORTHBOUND
No.	NUMBER (MUST HAVE PERIOD)
Nos.	NUMBERS (MUST HAVE PERIOD)
NPS	NOMINAL PIPE SIZE
NS	NEAR SIDE
NSP	NEW STANDARD PLAN
NTS	NOT TO SCALE

O

Oblr	OBLITERATE
OC	OVERCROSSING
OD	OUTSIDE DIAMETER
OF	OUTSIDE FACE
OG	ORIGINAL GROUND
OGAC	OPEN GRADED ASPHALT CONCRETE
OGFC	OPEN GRADED FRICTION COURSE
OH	OVERHEAD
OHWM	ORDINARY HIGH WATER MARK
O-O	OUT TO OUT
Opp	OPPOSITE
OSD	OVERSIDE DRAIN

P

P	PAGE
PAP	PERFORATED ALUMINUM PIPE
PB	PULL BOX
PC	POINT OF CURVATURE,
	PRECAST
PCC	POINT OF COMPOUND CURVE,
	PORTLAND CEMENT CONCRETE
PCMS	PORTABLE CHANGEABLE MESSAGE SIGN
PCP	PERFORATED CONCRETE PIPE,
	PRESTRESSED CONCRETE PIPE
PCVC	POINT OF COMPOUND VERTICAL CURVE
PEC	PERMIT TO ENTER AND CONSTRUCT
Ped	PEDESTRIAN
Ped OC	PEDESTRIAN OVERCROSSING
Ped UC	PEDESTRIAN UNDERCROSSING
Perm Mtl	PERMEABLE MATERIAL

P continued

PG	PROFILE GRADE
PI	POINT OF INTERSECTION
PJP	PARTIAL JOINT PENETRATION
Pkwy	PARKWAY
ℙ,PL	PLATE
P/L	PROPERTY LINE
PM	POST MILE,
	TIME FROM NOON TO MIDNIGHT
PN	PAVING NOTCH
POC	POINT OF HORIZONTAL CURVE
POT	POINT OF TANGENT
POVC	POINT OF VERTICAL CURVE
PP	PIPE PILE,
	PLASTIC PIPE,
	POWER POLE
PPL	PREFORMED PERMEABLE LINER
PPP	PERFORATED PLASTIC PIPE
PRC	POINT OF REVERSE CURVE
PRF	PAVEMENT REINFORCING FABRIC
PRVC	POINT OF REVERSE VERTICAL CURVE
PS&E	PLANS, SPECIFICATIONS AND ESTIMATES
PS, P/S	PRESTRESSED
PSP	PERFORATED STEEL PIPE
PT	POINT OF TANGENCY
PVC	POLYVINYL CHLORIDE
Pvmt	PAVEMENT

Q

Qty	QUANTITY

R

R	RADIUS
R & D	REMOVE AND DISPOSE
R & S	REMOVE AND SALVAGE
R/C	RATE OF CHANGE
RCA	REINFORCED CONCRETE ARCH
RCB	REINFORCED CONCRETE BOX
RCP	REINFORCED CONCRETE PIPE
RCPA	REINFORCED CONCRETE PIPE ARCH
Rd	ROAD
Reinf	REINFORCED,
	REINFORCEMENT,
	REINFORCING
Rel	RELOCATE
Repl	REPLACEMENT
Ret	RETAINING
Rev	REVISED, REVISION
Rdwy	ROADWAY
RHMA	RUBBERIZED HOT MIX ASPHALT
Riv	RIVER
RM	ROAD-MIXED
RP	RADIUS POINT,
	REFERENCE POINT
RR	RAILROAD
RSP	ROCK SLOPE PROTECTION,
	REVISED STANDARD PLAN
Rt	RIGHT
Rte	ROUTE
RW	REDWOOD,
	RETAINING WALL
R/W	RIGHT OF WAY
Rwy	RAILWAY

S

S	SOUTH,
	SUPPLEMENT
SAE	STRUCTURE APPROACH EMBANKMENT
Salv	SALVAGE
SAPP	STRUCTURAL ALUMINUM PLATE PIPE
SB	SOUTHBOUND
SC	SAND CUSHION
SCSP	SLOTTED CORRUGATED STEEL PIPE
SD	STORM DRAIN
Sec	SECOND,
	SECTION
Sep	SEPARATION
SG	SUBGRADE
Shld	SHOULDER
Sht	SHEET
Sim	SIMILAR
℄	STATION LINE
SM	SELECTED MATERIAL
Spec	SPECIAL,
	SPECIFICATIONS
SPP	SLOTTED PLASTIC PIPE
SS	SLOPE STAKE
SSBM	STRAP AND SADDLE BRACKET METHOD
SSD	STRUCTURAL SECTION DRAIN
SSPA	STRUCTURAL STEEL PLATE ARCH
SSPP	STRUCTURAL STEEL PLATE PIPE
SSPPA	STRUCTURAL STEEL PLATE PIPE ARCH
SSRP	STEEL SPIRAL RIB PIPE
St	STREET
Sta	STATION
STBB	SINGLE THRIE BEAM BARRIER
Std	STANDARD
Str	STRUCTURE
Surf	SURFACING
SW	SIDEWALK,
	SOUND WALL
Swr	SEWER
Sym	SYMMETRICAL
S4S	SURFACE 4 SIDES

T

T	SEMI-TANGENT
Tan	TANGENT
TBB	THRIE BEAM BARRIER
Tbr	TIMBER
TC	TOP OF CURB
TCB	TRAFFIC CONTROL BOX
TCE	TEMPORARY CONSTRUCTION EASEMENT
Tel	TELEPHONE
Temp	TEMPORARY
TG	TOP OF GRADE
Tot	TOTAL
TP	TELEPHONE POLE
TPB	TREATED PERMEABLE BASE
TPM	TREATED PERMEABLE MATERIAL
Trans	TRANSITION

T continued

TS	TRANSVERSE,
	TRAFFIC SIGNAL,
	TUBULAR STEEL
Typ	TYPICAL

U

UC	UNDERCROSSING
UD	UNDERDRAIN
UG	UNDERGROUND
UON	UNLESS OTHERWISE NOTED
UP	UNDERPASS

V

V	VALVE,
	DESIGN SPEED
Var	VARIABLE,
	VARIES
VC	VERTICAL CURVE
VCP	VITRIFIED CLAY PIPE
Vert	VERTICAL
Via	VIADUCT
Vol	VOLUME

W

W	WEST,
	WIDTH
WB	WESTBOUND
WH	WEEP HOLE
WM	WIRE MESH
WS	WATER SURFACE
WSP	WELDED STEEL PIPE
Wt	WEIGHT
WV	WATER VALVE
WW	WINGWALL
WWLOL	WINGWALL LAYOUT LINE

X

X Sec	CROSS SECTION
Xing	CROSSING

Y

Yr	YEAR
Yrs	YEARS

Dist	COUNTY	ROUTE	POST MILES TOTAL PROJECT	SHEET No.	TOTAL SHEETS
02	Mod	139	R10.7/28.0	134	149

Grace M. Tsushima
REGISTERED CIVIL ENGINEER

July 19, 2013
PLANS APPROVAL DATE

REGISTERED PROFESSIONAL ENGINEER Grace M. Tsushima No. C49814 Exp. 9-30-14 CIVIL STATE OF CALIFORNIA

THE STATE OF CALIFORNIA OR ITS OFFICERS OR AGENTS SHALL NOT BE RESPONSIBLE FOR THE ACCURACY OR COMPLETENESS OF SCANNED COPIES OF THIS PLAN SHEET.

TO ACCOMPANY PLANS DATED 06-15-15

UNIT OF MEASUREMENT SYMBOLS:

Some of the symbols used in the project plan quantity tables and in the Bid Item List are:

TABLE A

SYMBOL USED	DEFINITIONS
ACRE	ACRE
CF	CUBIC FOOT
CY	CUBIC YARD
EA	EACH
GAL	GALLON
LB	POUND
LF	LINEAR FOOT
SQFT	SQUARE FOOT
SQYD	SQUARE YARD
STA	100 FEET
TAB	TABLET
TON	2,000 POUNDS

Some of the symbols used in the plans other than in the project plan quantity tables are:

TABLE B

SYMBOL USED	DEFINITIONS
ksi	KIPS PER SQUARE INCH
ksf	KIPS PER SQUARE FOOT
psi	POUNDS PER SQUARE INCH
psf	POUNDS PER SQUARE FOOT
lb/ft^3, pcf	POUNDS PER CUBIC FOOT
tsf	TONS PER SQUARE FOOT
mph, MPH *	MILES PER HOUR
ø	NOMINAL DIAMETER
oz	OUNCE
lb	POUND
kip	1,000 POUNDS
cal	CALORIE
ft	FOOT OR FEET
gal	GALLON

* For use on a sign panel only

STATE OF CALIFORNIA
DEPARTMENT OF TRANSPORTATION

ABBREVIATIONS (SHEET 2 OF 2)

NO SCALE

RSP A10B DATED JULY 19, 2013 SUPERSEDES STANDARD PLAN A10B DATED MAY 20, 2011 - PAGE 2 OF THE STANDARD PLANS BOOK DATED 2010.

REVISED STANDARD PLAN RSP A10B

2010 REVISED STANDARD PLAN RSP A10B

DATE PLOTTED => 24-JUN-2015
TIME PLOTTED => 11:22

Dist	COUNTY	ROUTE	POST MILES TOTAL PROJECT	SHEET No.	TOTAL SHEETS
02	Mod	139	R10.7/28.0	135	149

REGISTERED CIVIL ENGINEER

April 20, 2012
PLANS APPROVAL DATE

REGISTERED PROFESSIONAL ENGINEER
Roberta L. McLaughlin
No. C40375
Exp. 3-31-13
CIVIL
STATE OF CALIFORNIA

THE STATE OF CALIFORNIA OR ITS OFFICERS OR AGENTS SHALL NOT BE RESPONSIBLE FOR THE ACCURACY OR COMPLETENESS OF SCANNED COPIES OF THIS PLAN SHEET.

TO ACCOMPANY PLANS DATED 06-15-15

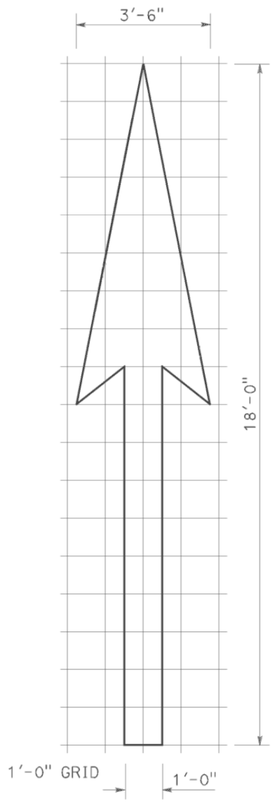

A=25 ft^2

TYPE I 18'-0" ARROW

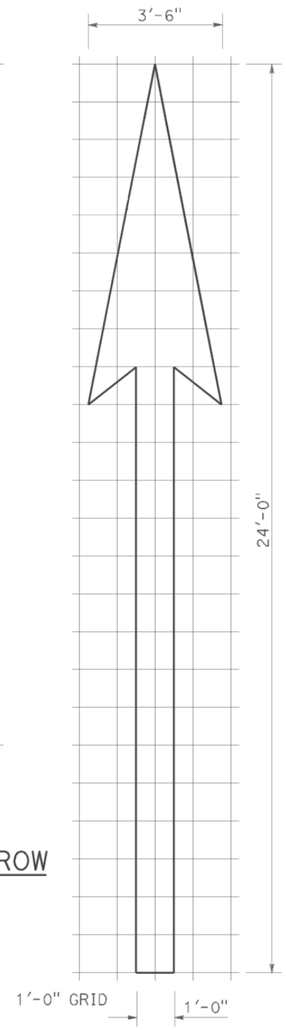

A=31 ft^2

TYPE I 24'-0" ARROW

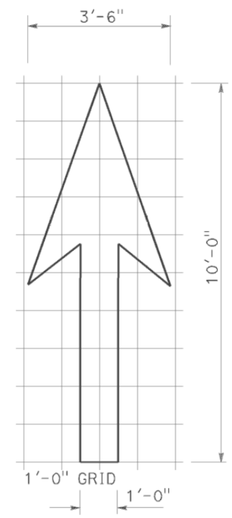

A=14 ft^2

TYPE I 10'-0" ARROW

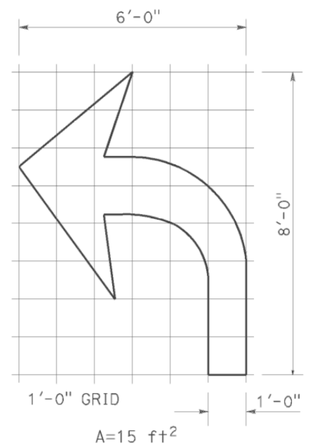

A=15 ft^2

TYPE IV (L) ARROW

(For Type IV (R) arrow, use mirror image)

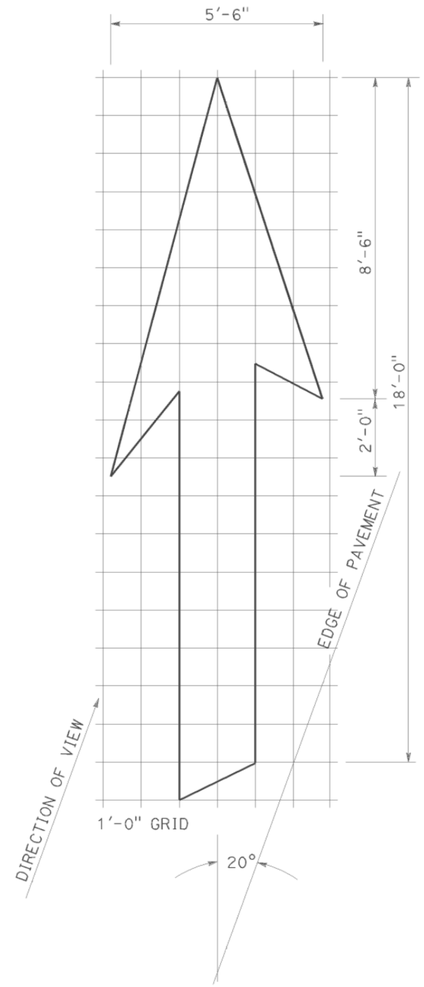

A=42 ft^2

TYPE VI ARROW

Right lane drop arrow
(For left lane, use mirror image)

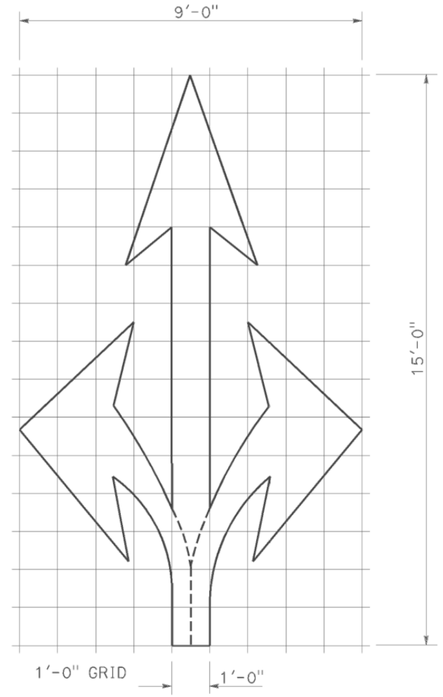

A=36 ft^2

TYPE VIII ARROW

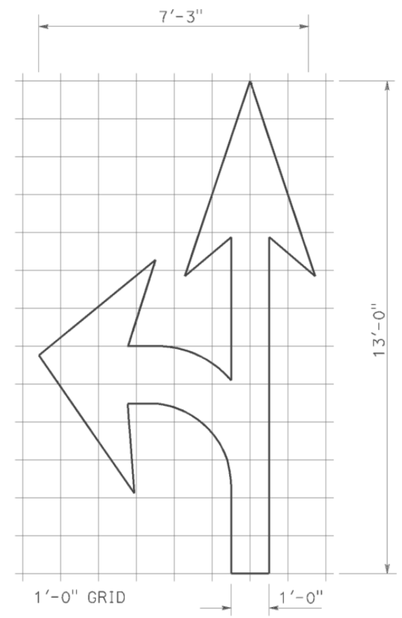

A=27 ft^2

TYPE VII (L) ARROW

(For Type VII (R) arrow, use mirror image)

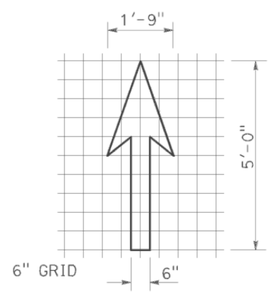

A=3.5 ft^2

BIKE LANE ARROW

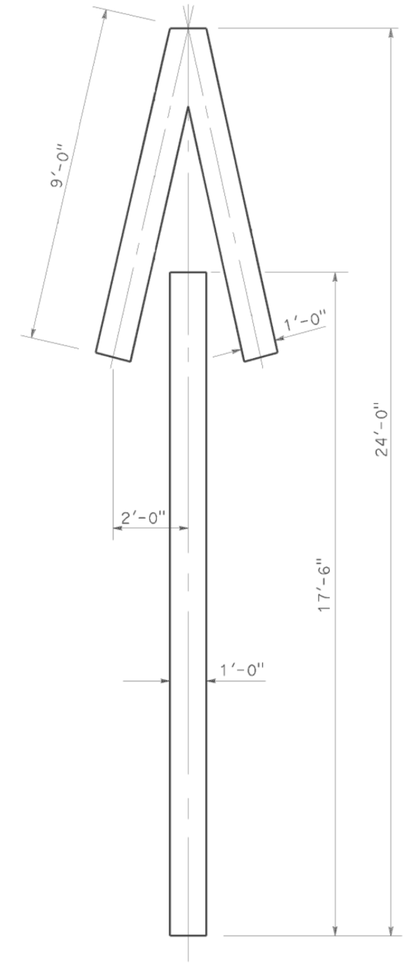

A=33 ft^2

TYPE V ARROW

NOTE:
Minor variations in dimensions may be accepted by the Engineer.

STATE OF CALIFORNIA
DEPARTMENT OF TRANSPORTATION

PAVEMENT MARKINGS ARROWS

NO SCALE

RSP A24A DATED APRIL 20, 2012 SUPERSEDES STANDARD PLAN A24A DATED MAY 20, 2011 - PAGE 13 OF THE STANDARD PLANS BOOK DATED 2010.

REVISED STANDARD PLAN RSP A24A

2010 REVISED STANDARD PLAN RSP A24A

DATE PLOTTED => 24-JUN-2015
TIME PLOTTED => 11:22

Dist	COUNTY	ROUTE	POST MILES TOTAL PROJECT	SHEET No.	TOTAL SHEETS
02	Mod	139	R10.7/28.0	136	149

REGISTERED CIVIL ENGINEER

July 20, 2012
PLANS APPROVAL DATE

REGISTERED PROFESSIONAL ENGINEER
Roberta L. McLaughlin
No. C40375
Exp. 3-31-13
CIVIL
STATE OF CALIFORNIA

THE STATE OF CALIFORNIA OR ITS OFFICERS OR AGENTS SHALL NOT BE RESPONSIBLE FOR THE ACCURACY OR COMPLETENESS OF SCANNED COPIES OF THIS PLAN SHEET.

TO ACCOMPANY PLANS DATED 06-15-15

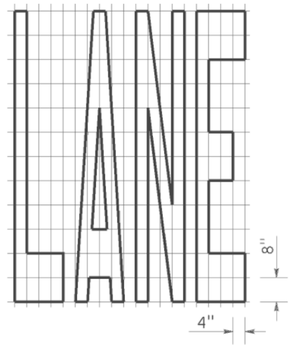

A=24 ft^2

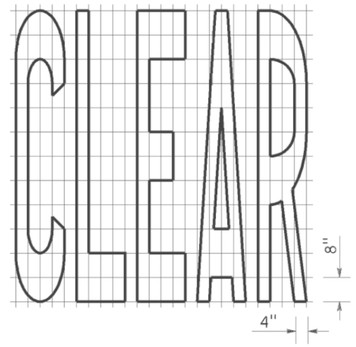

A=27 ft^2

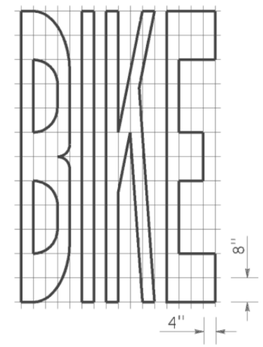

A=21 ft^2

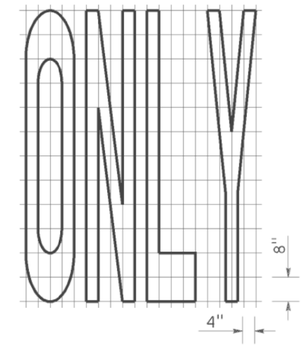

A=22 ft^2

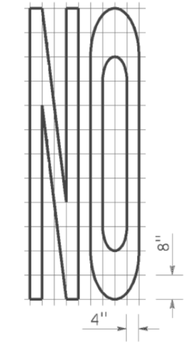

A=14 ft^2

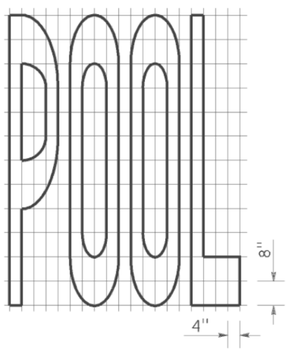

A=23 ft^2

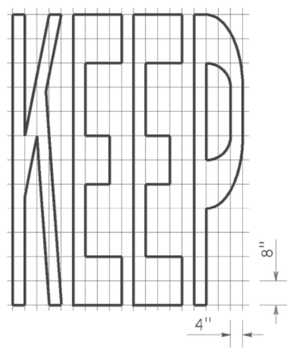

A=24 ft^2

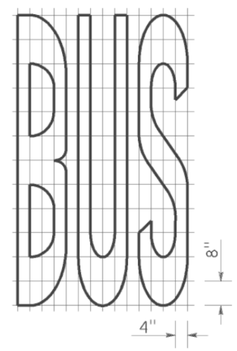

A=20 ft^2

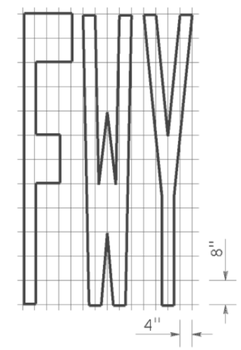

A=16 ft^2

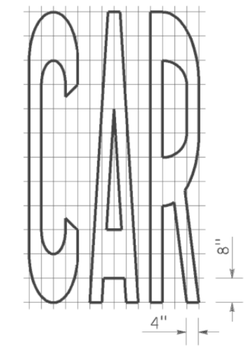

A=17 ft^2

WORD MARKINGS			
ITEM	ft^2	ITEM	ft^2
LANE	24	NO	14
POOL	23	BIKE	21
CAR	17	BUS	20
CLEAR	27	ONLY	22
KEEP	24	FWY	16

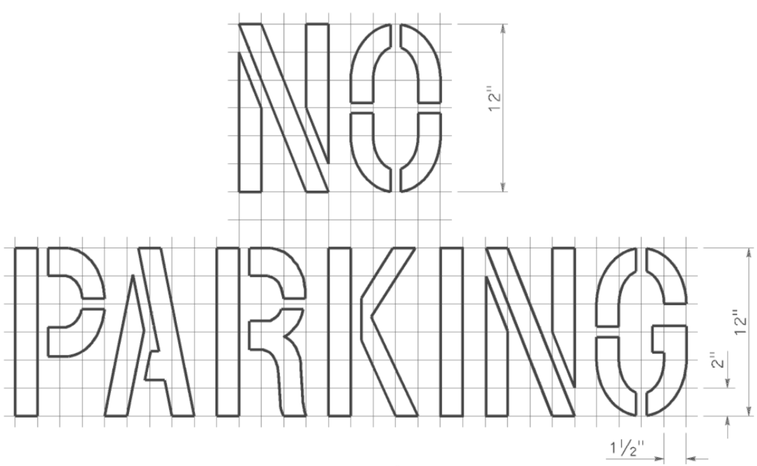

A=2 ft^2
See Notes 6 and 7

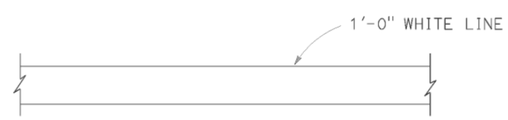

LIMIT LINE (STOP LINE)

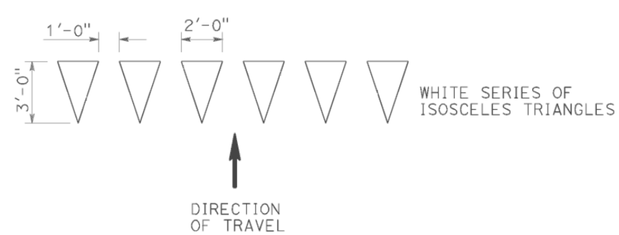

YIELD LINE

NOTES:

1. If a message consists of more than one word, it should read "UP", i.e., the first word should be nearest the driver.
2. The space between words should be at least four times the height of the characters for low speed roads, but not more than ten times the height of the characters. The space may be reduced appropriately where there is limited space because of local conditions.
3. Minor variations in dimensions may be accepted by the Engineer.
4. Portions of a letter, number or symbol may be separated by connecting segments not to exceed 2" in width.
5. The words "NO PARKING" pavement marking is to be used for parking facilities. For typical locations of markings, see Standard Plans A90A and A90B.
6. The words "NO PARKING", shall be painted in white letters no less than 1'-0" high on a contrasting background and located so that it is visible to traffic enforcement officials.

STATE OF CALIFORNIA
DEPARTMENT OF TRANSPORTATION

PAVEMENT MARKINGS
WORDS, LIMIT AND YIELD LINES

NO SCALE

RSP A24E DATED JULY 20, 2012 SUPERSEDES STANDARD PLAN A24E
DATED MAY 20, 2011 - PAGE 17 OF THE STANDARD PLANS BOOK DATED 2010.

REVISED STANDARD PLAN RSP A24E

2010 REVISED STANDARD PLAN RSP A24E

DATE PLOTTED => 24-JUN-2015
TIME PLOTTED => 11:22

Dist	COUNTY	ROUTE	POST MILES TOTAL PROJECT	SHEET No.	TOTAL SHEETS
02	Mod	139	R10.7/28.0	137	149

REGISTERED CIVIL ENGINEER

July 19, 2013
PLANS APPROVAL DATE

REGISTERED PROFESSIONAL ENGINEER
Michael Janzen
No. 44788
Exp. 03-31-14
CIVIL
STATE OF CALIFORNIA

THE STATE OF CALIFORNIA OR ITS OFFICERS OR AGENTS SHALL NOT BE RESPONSIBLE FOR THE ACCURACY OR COMPLETENESS OF SCANNED COPIES OF THIS PLAN SHEET.

TO ACCOMPANY PLANS DATED 06-15-15

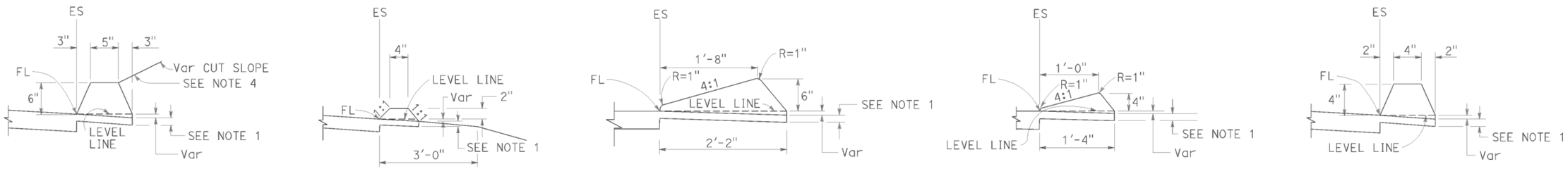

TYPE A
See Note 3

TYPE C

TYPE D

TYPE E

TYPE F
See Note 5

DIKES

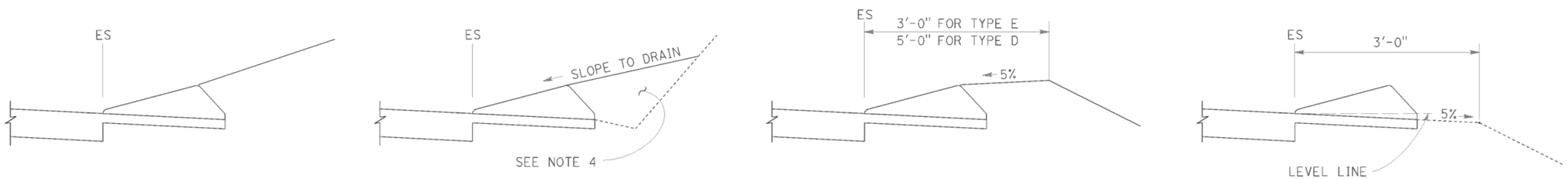

CASE C-1
Cut Slope

CASE C-2
Cut Slope

CASE F

CASE R
See Note 2

TYPE D AND E BACKFILL DETAILS

NOTES:

1. For HMA shoulders only, extend top layer of HMA placed on the shoulder under dike with no joint at the ES. For projects with OGFC shoulders, do not extend OGFC under dike. See project plans for modified dike detail.
2. Case R applies to retrofit only projects where restrictive conditions do not provide enough width for Case F backfill.
3. Type A dike only to be used where restrictive slope conditions do not provide enough width to use Type D or Type E dike.
4. Fill and compact with excavated material to top of dike.
5. Use Type F dike, where dike is required with guard railing installations. See Revised Standard Plan RSP A77N4 for dike positioning details.

DIKE QUANTITIES

TYPE	CUBIC YARDS PER LINEAR FOOT
A	0.0135
C	0.0038
D	0.0293
E	0.0130
F	0.0066

Quantities based on 5% cross slope.

STATE OF CALIFORNIA
DEPARTMENT OF TRANSPORTATION

HOT MIX ASPHALT DIKES

NO SCALE

RSP A87B DATED JULY 19, 2013 SUPERSEDES STANDARD PLAN A87B
DATED MAY 20, 2011 - PAGE 120 OF THE STANDARD PLANS BOOK DATED 2010.

REVISED STANDARD PLAN RSP A87B

2010 REVISED STANDARD PLAN RSP A87B

DATE PLOTTED => 24-JUN-2015
TIME PLOTTED => 11:22

DIST	COUNTY	ROUTE	POST MILES TOTAL PROJECT	SHEET No.	TOTAL SHEETS
02	Mod	139	R10.7/28.0	138	149

REGISTERED CIVIL ENGINEER

November 15, 2013
PLANS APPROVAL DATE

REGISTERED PROFESSIONAL ENGINEER
Cornelis M. Hakim
No. C55610
Exp. 12-31-14
CIVIL
STATE OF CALIFORNIA

THE STATE OF CALIFORNIA OR ITS OFFICERS OR AGENTS SHALL NOT BE RESPONSIBLE FOR THE ACCURACY OR COMPLETENESS OF SCANNED COPIES OF THIS PLAN SHEET.

TO ACCOMPANY PLANS DATED 06-15-15

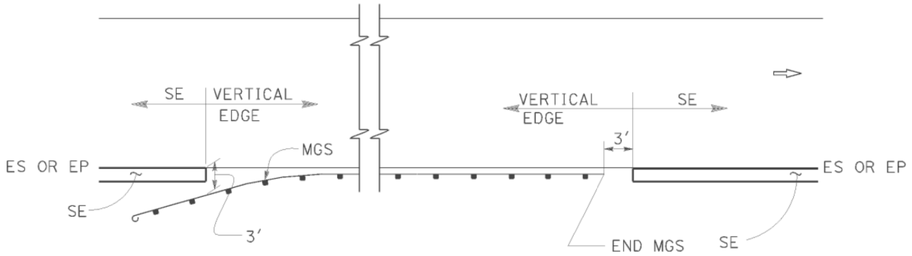

MGS

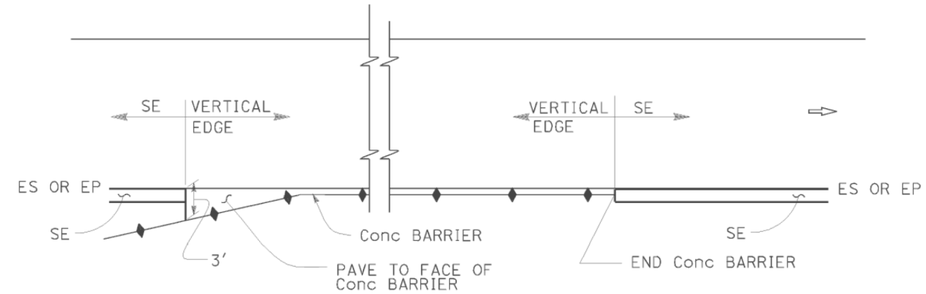

CONCRETE BARRIER

ABBREVIATIONS:

SE SAFETY EDGE

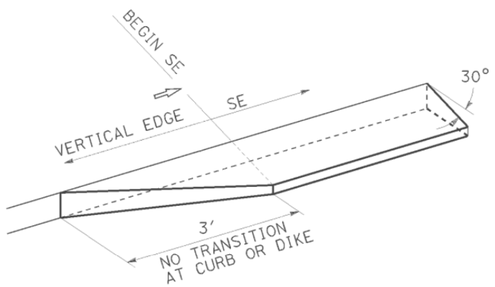

TRANSITION DETAIL FOR CONCRETE ONLY

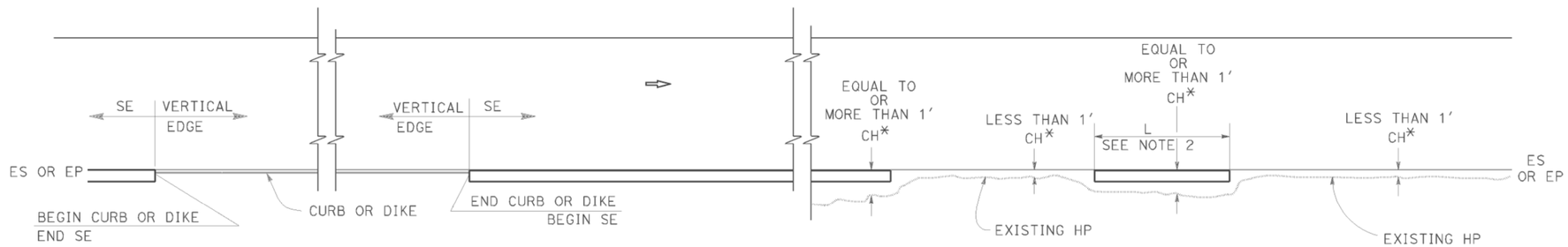

CURB OR DIKE

NARROW SIDE SLOPE

* CH = Distance from ES or EP to existing HP.

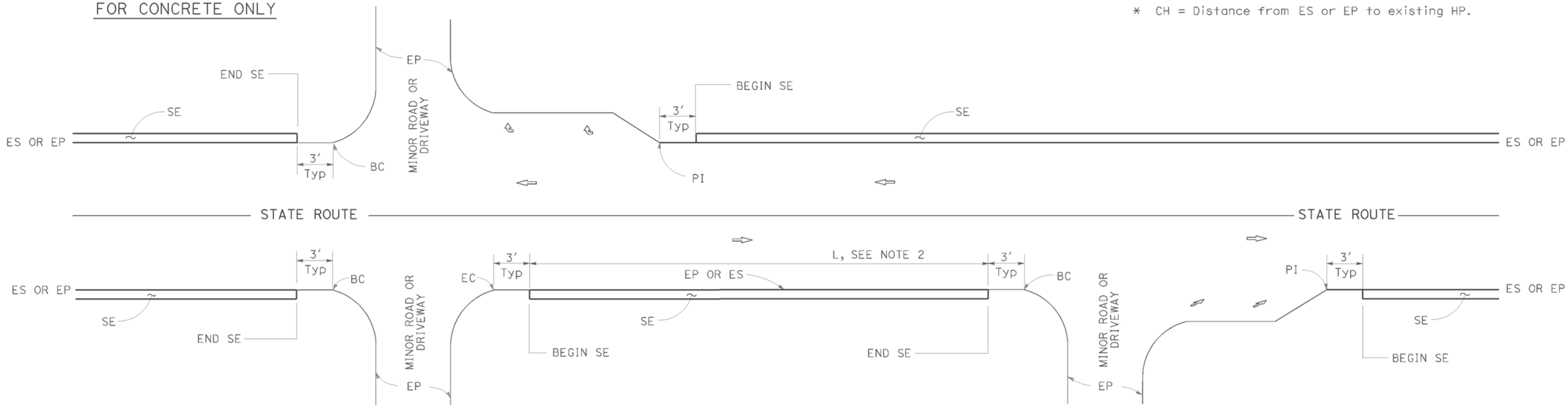

INTERSECTION

MINOR ROADWAY OR DRIVEWAY

DRIVEWAY AND INTERSECTION

NOTES:

1. For details not shown, see Revised Standard Plans RSP P75 and RSP P76.
2. Safety edge is optional when L is less than 30′.

STATE OF CALIFORNIA
DEPARTMENT OF TRANSPORTATION

PAVEMENT EDGE TREATMENTS

NO SCALE

RSP P74 DATED NOVEMBER 15, 2013 SUPERSEDES RSP P74 DATED JANUARY 20, 2012 THAT SUPPLEMENTS THE STANDARD PLANS BOOK DATED 2010.

REVISED STANDARD PLAN RSP P74

2010 REVISED STANDARD PLAN RSP P74

DATE PLOTTED => 24-JUN-2015
TIME PLOTTED => 11:22

DIST	COUNTY	ROUTE	POST MILES TOTAL PROJECT	SHEET No.	TOTAL SHEETS
02	Mod	139	R10.7/28.0	139	149

REGISTERED CIVIL ENGINEER

November 15, 2013
PLANS APPROVAL DATE

REGISTERED PROFESSIONAL ENGINEER Cornelis M. Hakim No. C55610 Exp. 12-31-14 CIVIL STATE OF CALIFORNIA

THE STATE OF CALIFORNIA OR ITS OFFICERS OR AGENTS SHALL NOT BE RESPONSIBLE FOR THE ACCURACY OR COMPLETENESS OF SCANNED COPIES OF THIS PLAN SHEET.

TO ACCOMPANY PLANS DATED 06-15-15

LEGEND:

- HMA PAVEMENT
- HMA OR CONCRETE PAVEMENT
- CONCRETE PAVEMENT

ABBREVIATIONS:

SE SAFETY EDGE
TT TOTAL THICKNESS OF SE
HW HINGE WIDTH, DISTANCE FROM ES OR EP TO HP

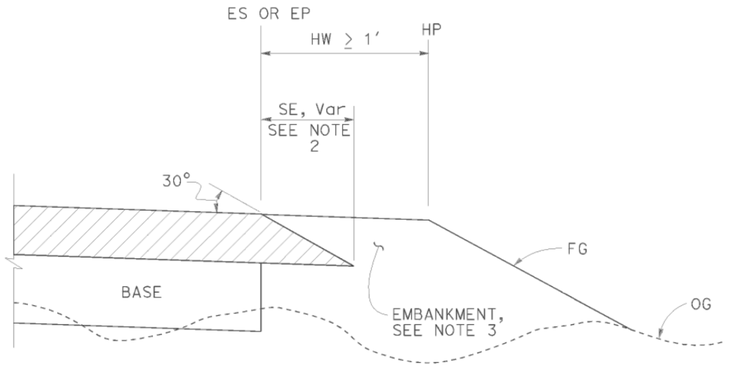

CASE K
Safety Edge - Fill Section, HW ≥ 1′

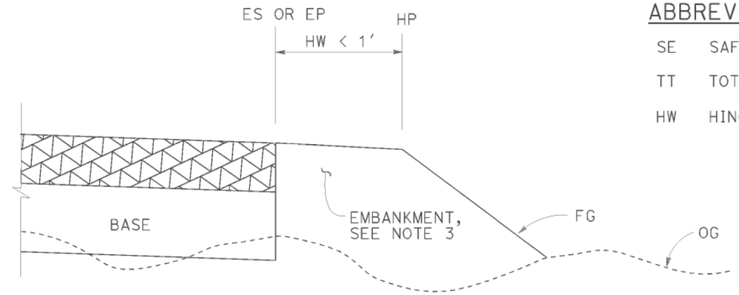

CASE L
Vertical Edge - Fill Section, HW < 1′

FILL SECTION

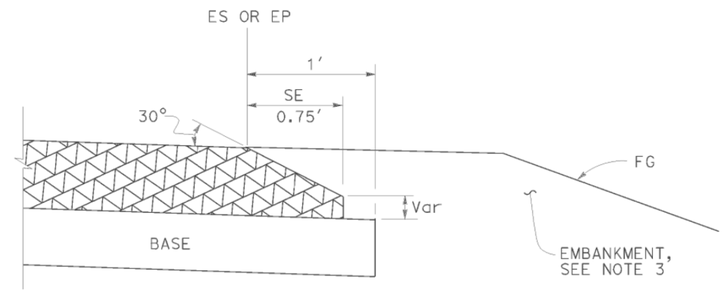

DETAIL "B"
For HMA pavement thickness more than 0.43′ or concrete pavement

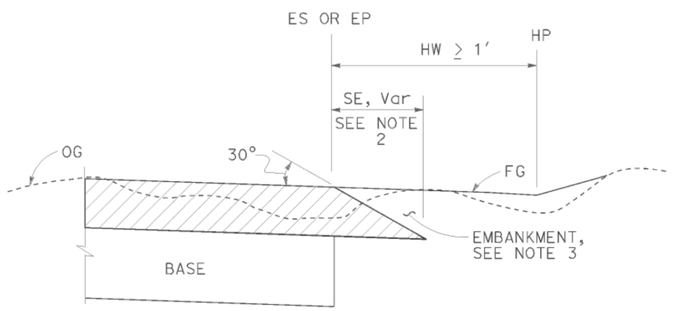

CASE M
Safety Edge - Cut Section, HW ≥ 1′

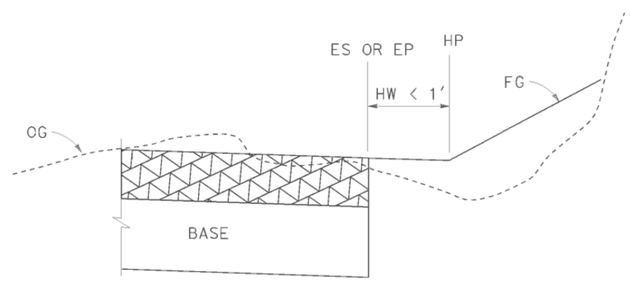

CASE N
Vertical Edge - Cut Section, HW < 1′

CUT SECTION

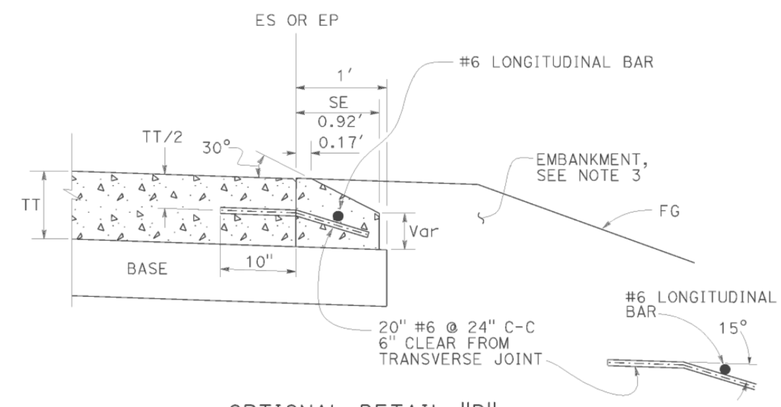

OPTIONAL DETAIL "B"
For concrete pavement
See Note 4

NOTES:

1. For limits of safety edge and vertical edge treatments, see Revised Standard Plan RSP P74
2. Details shown for HMA pavement thickness less than 0.43′. See Detail "B" for HMA pavement thickness more than 0.43′ or concrete pavement.
3. For locations and limits of embankment see project plans.
4. Safety edge transverse joint must match pavement transverse joint. End of #6 longitudinal bar must be 2" ±½" clear from transverse joint.
5. Safety edge is not needed in the area of MGS, barrier, right turn lane and acceleration lane. See Revised Standard Plan RSP P74.

STATE OF CALIFORNIA
DEPARTMENT OF TRANSPORTATION

PAVEMENT EDGE TREATMENTS-NEW CONSTRUCTION

NO SCALE

RSP P76 DATED NOVEMBER 15, 2013 SUPERSEDES RSP P76 DATED JANUARY 20, 2012 THAT SUPPLEMENTS THE STANDARD PLANS BOOK DATED 2010.

REVISED STANDARD PLAN RSP P76

2010 REVISED STANDARD PLAN RSP P76

DATE PLOTTED => 24-JUN-2015
TIME PLOTTED => 11:22

Dist	COUNTY	ROUTE	POST MILES TOTAL PROJECT	SHEET No.	TOTAL SHEETS
02	Mod	139	R10.7/28.0	140	149

REGISTERED CIVIL ENGINEER

July 19, 2013
PLANS APPROVAL DATE

REGISTERED PROFESSIONAL ENGINEER
Gurinderpal Bhullar
No. C48815
Exp. 9-30-14
CIVIL
STATE OF CALIFORNIA

THE STATE OF CALIFORNIA OR ITS OFFICERS OR AGENTS SHALL NOT BE RESPONSIBLE FOR THE ACCURACY OR COMPLETENESS OF SCANNED COPIES OF THIS PLAN SHEET.

TO ACCOMPANY PLANS DATED 06-15-15

2010 REVISED STANDARD PLAN RSP T9

TABLE 1

TAPER LENGTH CRITERIA AND CHANNELIZING DEVICE SPACING

SPEED (S)	MINIMUM TAPER LENGTH * FOR WIDTH OF OFFSET 12 FEET (W)				MAXIMUM CHANNELIZING DEVICE SPACING		
					X	Y	Z **
	TANGENT 2L	MERGING L	SHIFTING L/2	SHOULDER L/3	TAPER	TANGENT	CONFLICT
mph	ft	ft	ft	ft	ft	ft	ft
20	160	80	40	27	20	40	10
25	250	125	63	42	25	50	12
30	360	180	90	60	30	60	15
35	490	245	123	82	35	70	17
40	640	320	160	107	40	80	20
45	1080	540	270	180	45	90	22
50	1200	600	300	200	50	100	25
55	1320	660	330	220	55	110	27
60	1440	720	360	240	60	120	30
65	1560	780	390	260	65	130	32
70	1680	840	420	280	70	140	35

* - For other offsets, use the following merging taper length formula for L:
For speed of 40 mph or less, $L = WS^2/60$
For speed of 45 mph or more, $L = WS$

Where: L = Taper length in feet
W = Width of offset in feet
S = Posted speed limit, off-peak 85th-percentile speed prior to work starting, or the anticipated operating speed in mph

** - Use for taper and tangent sections where there are no pavement markings or where there is a conflict between existing pavement markings and channelizers (CA).

TABLE 2

LONGITUDINAL BUFFER SPACE AND FLAGGER STATION SPACING

SPEED *	Min D **	DOWNGRADE Min D ***		
		-3%	-6%	-9%
mph	ft	ft	ft	ft
20	115	116	120	126
25	155	158	165	173
30	200	205	215	227
35	250	257	271	287
40	305	315	333	354
45	360	378	400	427
50	425	446	474	507
55	495	520	553	593
60	570	598	638	686
65	645	682	728	785
70	730	771	825	891

* - Speed is posted speed limit, off-peak 85th-percentile speed prior to work starting, or the anticipated operating speed in mph

** - Longitudinal buffer space or flagger station spacing

*** - Use on sustained downgrade steeper than -3 percent and longer than 1 mile.

TABLE 3

ADVANCE WARNING SIGN SPACING

ROAD TYPE	DISTANCE BETWEEN SIGNS *		
	A	B	C
	ft	ft	ft
URBAN - 25 mph OR LESS	100	100	100
URBAN - MORE THAN 25 mph TO 40 mph	250	250	250
URBAN - MORE THAN 40 mph	350	350	350
RURAL	500	500	500
EXPRESSWAY / FREEWAY	1000	1500	2640

* - The distances are approximate, are intended for guidance purposes only, and should be applied with engineering judgment. These distances should be adjusted by the Engineer for field conditions, if necessary, by increasing or decreasing the recommmended distances.

STATE OF CALIFORNIA
DEPARTMENT OF TRANSPORTATION

TRAFFIC CONTROL SYSTEM TABLES FOR LANE AND RAMP CLOSURES

NO SCALE

RSP T9 DATED JULY 19, 2013 SUPERSEDES RSP T9 DATED APRIL 19, 2013 THAT SUPPLEMENTS THE STANDARD PLANS BOOK DATED 2010.

REVISED STANDARD PLAN RSP T9

DATE PLOTTED => 24-JUN-2015
TIME PLOTTED => 11:22

Dist	COUNTY	ROUTE	POST MILES TOTAL PROJECT	SHEET No.	TOTAL SHEETS
02	Mod	139	R10.7/28.0	141	149

REGISTERED CIVIL ENGINEER

April 19, 2013
PLANS APPROVAL DATE

REGISTERED PROFESSIONAL ENGINEER Gurinderpal Bhullar No. C48815 Exp. 9-30-14 CIVIL STATE OF CALIFORNIA

THE STATE OF CALIFORNIA OR ITS OFFICERS OR AGENTS SHALL NOT BE RESPONSIBLE FOR THE ACCURACY OR COMPLETENESS OF SCANNED COPIES OF THIS PLAN SHEET.

TO ACCOMPANY PLANS DATED 06-15-15

LEGEND

- TRAFFIC CONE
- TEMPORARY TRAFFIC CONTROL SIGN
- FLASHING ARROW SIGN (FAS)
- FAS SUPPORT OR TRAILER
- PORTABLE FLASHING BEACON

SIGN PANEL SIZE (Min)

- A 48" x 48"
- B 24" x 24"
- C 36" x 18"

NOTES:

See Revised Standard Plan RSP T9 for tables.

Use cone spacing X for taper segment, Y for tangent segment or Z for conflict situations, as approriate, per Table 1, unless X, Y, or Z cone spacing is shown on this sheet.

Unless otherwise specified in the special provisions, all temporary warning signs shall have black legend on fluorescent orange background.

California codes are designated by (CA). Otherwise, Federal (MUTCD) codes are shown.

TYPICAL HALF ROAD CLOSURE

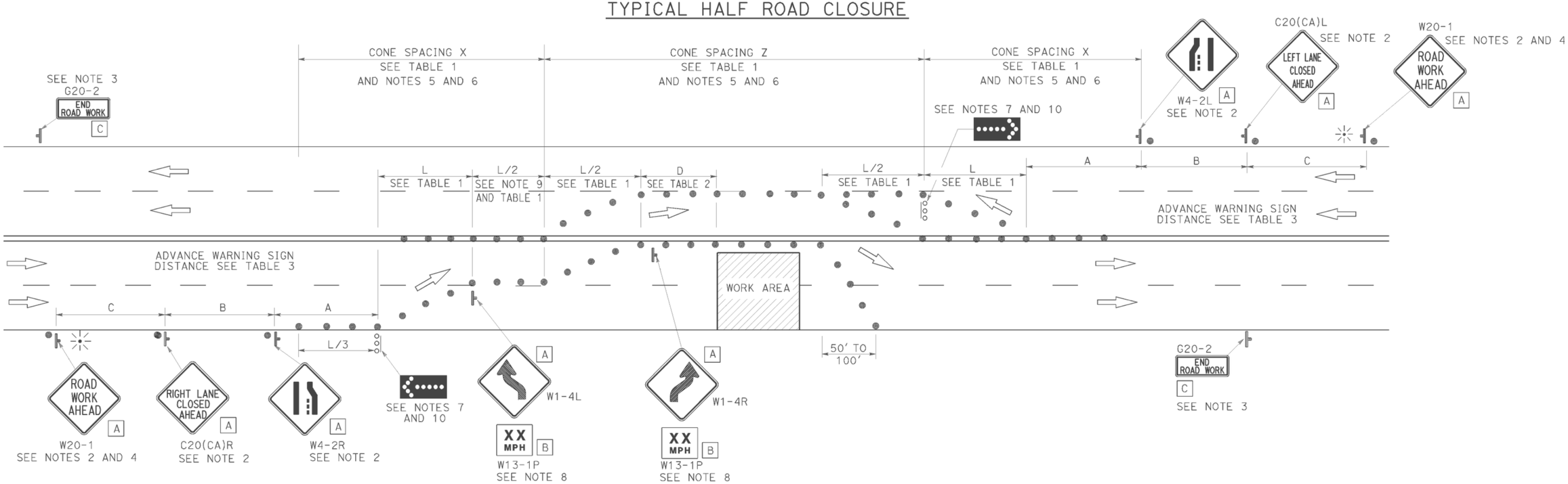

NOTES:

1. At least one person shall be assigned to provide full time maintenance of traffic control devices for lane closure unless, otherwise directed by the Engineer.
2. Each advance warning sign in each direction of travel shall be equipped with at least two flags for daytime closure. Each flag shall be at least 16" x 16" in size and shall be orange or fluorescent red-orange in color. Flashing beacons shall be placed at the locations indicated for lane closure during hours of darkness.
3. A G20-2 "END ROAD WORK" sign, as appropriate, shall be placed at the end of the lane closure unless the end of work area is obvious, or ends within a larger project's limits.
4. If the W20-1 sign would follow within 2000' of a stationary W20-1 or G20-1 "ROAD WORK NEXT _____ MILES", use a C20(CA) sign for the first advance warning sign.
5. All cones used for lane closures during the hours of darkness shall be fitted with retroreflective bands (or sleeves) as specified in the specifications.
6. Portable delineators, placed at one-half the spacing indicated for traffic cones, may be used instead of cones for daytime closures only.
7. Flashing arrow signs shall be either Type I or Type II.
8. Advisory speed will be determined by the Engineer. The W13-1P Plaque will not be required when advisory speed is more than the posted or maximum speed limit.
9. Unless otherwise specified in the special provisions, the tangent (L/2) shall be used.
10. A minimum 1500' of sight distance shall be provided where possible for vehicles approaching the first flashing arrow sign. Lane closures shall not begin at the top of crest vertical curve or on a horizontal curve.

STATE OF CALIFORNIA
DEPARTMENT OF TRANSPORTATION

TRAFFIC CONTROL SYSTEM FOR HALF ROAD CLOSURE ON MULTILANE CONVENTIONAL HIGHWAYS AND EXPRESSWAYS

NO SCALE

RSP T12 DATED APRIL 19, 2013 SUPERSEDES STANDARD PLAN T12
DATED MAY 20, 2011 - PAGE 240 OF THE STANDARD PLANS BOOK DATED 2010.

REVISED STANDARD PLAN RSP T12

2010 REVISED STANDARD PLAN RSP T12

DATE PLOTTED => 24-JUN-2015
TIME PLOTTED => 11:23

Dist	COUNTY	ROUTE	POST MILES TOTAL PROJECT	SHEET No.	TOTAL SHEETS
02	Mod	139	R10.7/28.0	142	149

Devinder Singh
REGISTERED CIVIL ENGINEER

October 17, 2014
PLANS APPROVAL DATE

REGISTERED PROFESSIONAL ENGINEER
Devinder Singh
No. C50470
Exp. 6-30-15
CIVIL
STATE OF CALIFORNIA

THE STATE OF CALIFORNIA OR ITS OFFICERS OR AGENTS SHALL NOT BE RESPONSIBLE FOR THE ACCURACY OR COMPLETENESS OF SCANNED COPIES OF THIS PLAN SHEET.

TO ACCOMPANY PLANS DATED 06-15-15

NOTES:

See Revised Standard Plan RSP T9 for tables.

Use cone spacing X for taper segment, Y for tangent segment or Z for conflict situations, as approriate, per Table 1, unless X, Y, or Z cone spacing is shown on this sheet.

Unless otherwise specified in the special provisions, all temporary warning signs shall have black legend on fluorescent orange background.

California codes are designated by (CA). Otherwise, Federal (MUTCD) codes are shown.

TYPICAL LANE CLOSURE WITH REVERSIBLE CONTROL

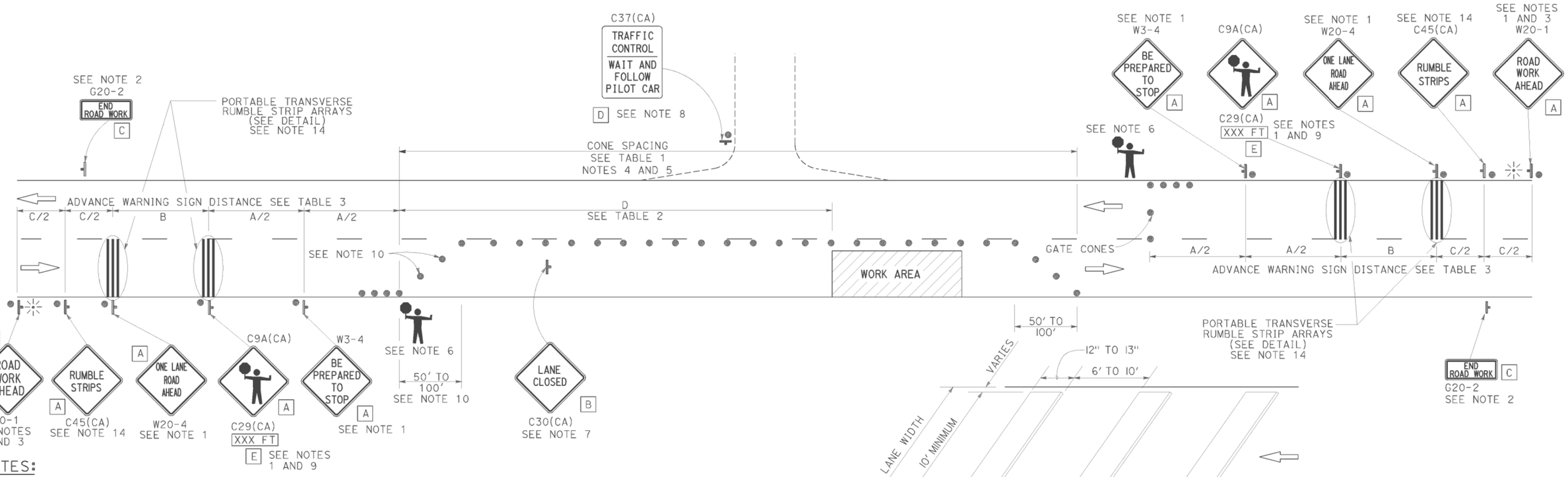

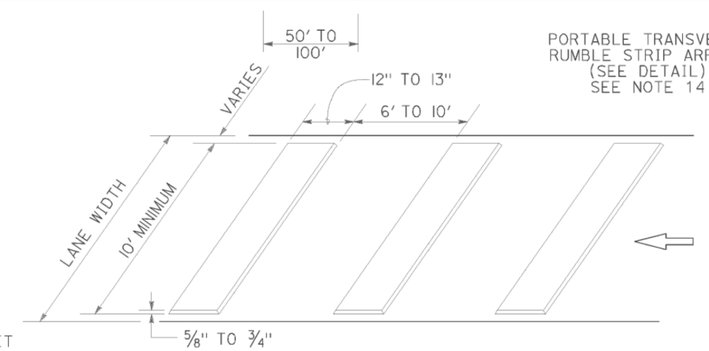

PORTABLE TRANSVERSE RUMBLE STRIP ARRAY DETAIL

NOTES:

1. Each advance warning sign in each direction of travel shall be equipped with at least two flags for daytime closure. Each flag shall be at least 16" x 16" in size and shall be orange or fluorescent red-orange in color. Flashing beacons shall be placed at the locations indicated for lane closure during hours of darkness.
2. A G20-2 "END ROAD WORK" sign, as appropriate, shall be placed at the end of the lane control unless the end of work area is obvious, or ends within a larger project's limits.
3. If the W20-1 sign would follow within 2000' of a stationary W20-1 or G20-1 "ROAD WORK NEXT _____ MILES", use a W20-4 sign for the first advance warning sign.
4. All cones used for lane closures during the hours of darkness shall be fitted with retroreflective bands (or sleeves) as specified in the specifications.
5. Portable delineators, placed at one-half the spacing indicated for traffic cones, may be used instead of cones for daytime closures only.
6. Additional advance flaggers may be required. Flagger should stand in a conspicuous place, be visible to approaching traffic as well as approaching vehicles after the first vehicle has stopped. During the hours of darkness, the flagging-station and flagger shall be illuminated and clearly visible to approaching traffic. The illumination footprint of the lighting on the ground shall be at least 20' in diameter. Place a minimum of four cones at 50' intervals in advance of flagger station as shown.
7. Place C30(CA) "LANE CLOSED" sign at 500' to 1000' intervals throughout extended work areas. They are optional if the work area is visible from the flagger station.
8. When a pilot car is used, place a C37(CA) "TRAFFIC CONTROL-WAIT AND FOLLOW PILOT CAR" sign with black legend on white background at all intersections, driveways and alleys without a flagger within traffic control area. Signs shall be clean and visible at all times. Where traffic can not be effectively self-regulated, at least one flagger shall be used at each intersection within traffic control area.
9. An optional C29(CA) sign may be placed below the C9A(CA) sign.
10. Either traffic cones or barricades shall be placed on the taper. Barricades shall be Type I, II, or III.
11. The color of the portable transverse rumble strips shall be black or orange. Use 2 arrays, each array shall consist of 3 rumble strips.
12. Portable transverse rumble strips shall not be placed on sharp horizontal or vertical curves nor shall they be placed through pedestrian crossings.
13. If the portable transverse rumble strips become out of alignment (skewed) by more than 6 inches, measured from one end to the other, they shall be readjusted to bring the placement back to the original location.
14. Portable transverse rumble strips are not required if any one of the following conditions is satisfied:
    A. Work duration occupies a location for four hours or less
    B. Posted speed limit is below 45 MPH
    C. Work is of emergency nature
    D. Work zone is in snow or icy weather conditions

LEGEND

- TRAFFIC CONE
- TEMPORARY TRAFFIC CONTROL SIGN
- PORTABLE FLASHING BEACON
- FLAGGER

SIGN PANEL SIZE (Min)

A	48" x 48"
B	30" x 30"
C	36" x 18"
D	36" x 42"
E	20" x 7"

STATE OF CALIFORNIA
DEPARTMENT OF TRANSPORTATION

TRAFFIC CONTROL SYSTEM FOR LANE CLOSURE ON TWO LANE CONVENTIONAL HIGHWAYS

NO SCALE

RSP T13 DATED OCTOBER 17, 2014 SUPERSEDES RSP T13 DATED JULY 18, 2014 AND RSP T13 DATED APRIL 19, 2013 AND STANDARD PLAN T13 DATED MAY 20, 2011 - PAGE 241 OF THE STANDARD PLANS BOOK DATED 2010.

REVISED STANDARD PLAN RSP T13

2010 REVISED STANDARD PLAN RSP T13

DATE PLOTTED => 24-JUN-2015
TIME PLOTTED => 11:23

Dist	COUNTY	ROUTE	POST MILES TOTAL PROJECT	SHEET No.	TOTAL SHEETS
02	Mod	139	R10.7/28.0	143	149

REGISTERED CIVIL ENGINEER

April 19, 2013
PLANS APPROVAL DATE

REGISTERED PROFESSIONAL ENGINEER Gurinderpal Bhullar No. C48815 Exp. 9-30-14 CIVIL STATE OF CALIFORNIA

THE STATE OF CALIFORNIA OR ITS OFFICERS OR AGENTS SHALL NOT BE RESPONSIBLE FOR THE ACCURACY OR COMPLETENESS OF SCANNED COPIES OF THIS PLAN SHEET.

TO ACCOMPANY PLANS DATED 06-15-15

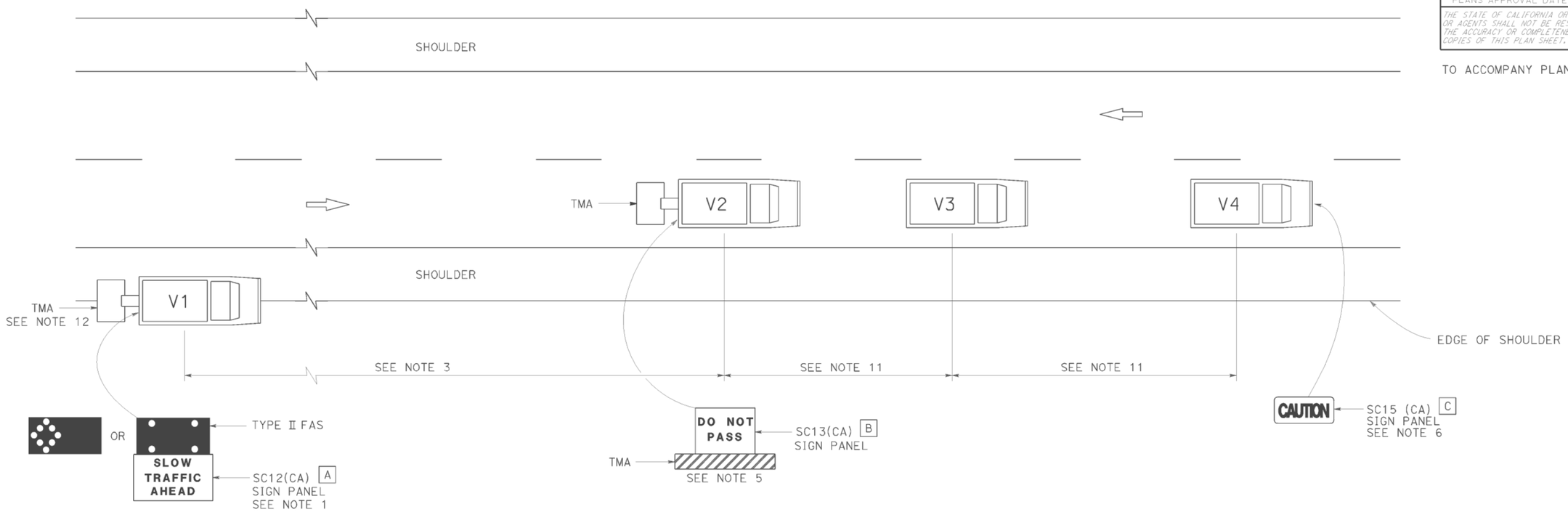

LEGEND

V1	SIGN VEHICLE
V2	SHADOW VEHICLE
V3	WORK/APPLICATION VEHICLE
V4	SIGN VEHICLE
TMA	TRUCK-MOUNTED ATTENUATOR
	FLASHING ARROW SIGN (FAS) IN FLASHING CAUTION MODE
	FLASHING ARROW SIGN (FAS) IN ALTERNATING DIAMOND CAUTION

SIGN PANEL SIZE (Min)

A	72" x 42"
B	54" x 42"
C	54" x 24"

NOTES:

1. Either a changeable message sign or a SC12(CA) "SLOW TRAFFIC AHEAD" sign shall be mounted on the rear of sign vehicle V1. The changeable message sign shall be sequenced to show the "CAUTION" message first, follow by the "SLOW TRAFFIC AHEAD" message. A Type II flashing arrow sign may be used with the SC12(CA) sign panel.
2. Sign vehicle V1 should be positioned where highly visible when shoulders are not available.
3. If traffic queues develop, sign vehicle V1 should be positioned upstream from the end of queue.
4. Vehicle-mounted sign panels shall have Type III or above retroreflective sheeting, black on white, or black on fluorescent orange, with 6" minimum series D letters per Caltrans sign specifications.
5. Shadow vehicle shall be equipped with a truck-mounted attenuator. The sign panel shown shall be mounted on the rear of shadow vehicle V2. The message "LANE CLOSED" may be used in place of the "DO NOT PASS" message.
6. The sign panel shown shall be mounted on the front of sign vehicle V4, facing opposing traffic.
7. All vehicles shall be equipped with flashing or rotating amber lights.
8. Sign vehicle V4 will not be required when the work and vehicles V2 and V3 are 2' or more from the centerline of the highway during the work or application operations.
9. All vehicles used for lane closures shall be equipped with two-way radios and the vehicle operators shall maintain communication during the work or application operation.
10. This plan shall not be used where workers would be on foot in the work area. Use a stationary type lane closure (Revised Standard Plan T13) for this condition.
11. Minimize spacing between vehicles V2 and V3 and vehicles V3 and V4 to deter road users from driving in between them.
12. If sign vehicle V1 encroaches into the traffic lane due to insufficient shoulder width, sign vehicle V1 shall be equipped with a truck-mounted attenuator. Sign vehicle V1 shall stay as close to the edge of shoulder as practicable.

STATE OF CALIFORNIA
DEPARTMENT OF TRANSPORTATION

TRAFFIC CONTROL SYSTEM FOR MOVING LANE CLOSURE ON TWO LANE HIGHWAYS

NO SCALE

RSP T17 DATED APRIL 19, 2013 SUPERSEDES STANDARD PLAN T17
DATED MAY 20, 2011 - PAGE 245 OF THE STANDARD PLANS BOOK DATED 2010.

REVISED STANDARD PLAN RSP T17

2010 REVISED STANDARD PLAN RSP T17

DATE PLOTTED => 24-JUN-2015
TIME PLOTTED => 11:23

Dist	COUNTY	ROUTE	POST MILES TOTAL PROJECT	SHEET No.	TOTAL SHEETS
02	Mod	139	R10.7/28.0	144	149

Theresa Gabriel
REGISTERED ELECTRICAL ENGINEER

July 19, 2013
PLANS APPROVAL DATE

REGISTERED PROFESSIONAL ENGINEER Theresa Aziz Gabriel No. E15129 Exp. 6-30-14 ELECTRICAL STATE OF CALIFORNIA

THE STATE OF CALIFORNIA OR ITS OFFICERS OR AGENTS SHALL NOT BE RESPONSIBLE FOR THE ACCURACY OR COMPLETENESS OF SCANNED COPIES OF THIS PLAN SHEET.

TO ACCOMPANY PLANS DATED 06-15-15

LEGEND:

AB	ABANDON. IF APPLIED TO CONDUIT, REMOVE CONDUCTORS
BC	INSTALL PULL BOX IN EXISTING CONDUIT RUN
BP	PEDESTRIAN BARRICADE, TYPE AS INDICATED ON PLAN
CB	INSTALL CONDUIT INTO EXISTING PULL BOX
CC	CONNECT NEW AND EXISTING CONDUIT. REMOVE EXISTING CONDUCTORS AND INSTALL CONDUCTORS AS INDICATED
CF	CONDUIT TO REMAIN FOR FUTURE USE. REMOVE CONDUCTORS. INSTALL PULL TAPE
DH	DETECTOR HANDHOLE
FA	FOUNDATION TO BE ABANDONED
IS	INSTALL SIGN ON SIGNAL MAST ARM
NS	NO SLIP BASE ON STANDARD
PEC	PHOTOELECTRIC CONTROL
PEU	PHOTOELECTRIC UNIT
RC	EQUIPMENT OR MATERIAL TO BE REMOVED AND BECOME THE PROPERTY OF THE CONTRACTOR
RE	REMOVE ELECTROLIER, FUSES AND BALLAST. TAPE ENDS OF CONDUCTORS
RL	RELOCATE EQUIPMENT
RR	REMOVE AND REUSE EQUIPMENT
RS	REMOVE AND SALVAGE EQUIPMENT
SC	SPLICE NEW TO EXISTING CONDUCTORS
SD	SERVICE DISCONNECT
TSP	TELEPHONE SERVICE POINT

ABBREVIATIONS

APS	ACCESSIBLE PEDESTRIAN SIGNAL
BBS	BATTERY BACKUP SYSTEM
BC	BOLT CIRCLE
BPB	BICYCLE PUSH BUTTON
C	CONDUIT
CB	CIRCUIT BREAKER
CCTV	CLOSED CIRCUIT TELEVISION
Ckt	CIRCUIT
CMS	CHANGEABLE MESSAGE SIGN
Ctid	CALTRANS IDENTIFICATION
Comm	COMMUNICATION
DLC	LOOP DETECTOR LEAD-IN CABLE
EMS	EXTINGUISHABLE MESSAGE SIGN
EVUC	EMERGENCY VEHICLE UNIT CABLE
EVUD	EMERGENCY VEHICLE UNIT DETECTOR
FB	FLASHING BEACON
FBCA	FLASHING BEACON CONTROL ASSEMBLY
FBS	FLASHING BEACON WITH SLIP BASE
FO	FIBER OPTIC
G	EQUIPMENT GROUNDING CONDUCTOR
GB	GROUND BUS
GFCI	GROUND FAULT CIRCUIT INTERRUPTER
HAR	HIGHWAY ADVISORY RADIO
Hex	HEXAGONAL
HPS	HIGH PRESSURE SODIUM
IISNS	INTERNALLY ILLUMINATED STREET NAME SIGN
ISL	INDUCTION SIGN LIGHTING
LED	LIGHT EMITTING DIODE
LMA	LUMINAIRE MAST ARM
LPS	LOW PRESSURE SODIUM
Ltg	LIGHTING
Lum	LUMINAIRE
M	METERED
MAT	MAST ARM MOUNTING TOP ATTACHMENT
MAS	MAST ARM MOUNTING SIDE ATTACHMENT
M/M	MULTIPLE TO MULTIPLE TRANSFORMER
Mtg	MOUNTING
MV	MERCURY VAPOR LIGHTING FIXTURE
MVDS	MICROWAVE VEHICLE DETECTION SYSTEM
N	NEUTRAL (GROUNDED CONDUCTOR)
NB	NEUTRAL BUS
NC	NORMALLY CLOSE
NO	NORMALLY OPEN
P	CIRCUIT BREAKER'S POLE
PB	PULL BOX
PBA	PUSH BUTTON ASSEMBLY
PEC	PHOTOELECTRIC CONTROL
Ped	PEDESTRIAN
PEU	PHOTOELECTRIC UNIT
PT	CONDUIT WITH PULL TAPE
RE	RELOCATED EQUIPMENT
RM	RAMP METERING
RWIS	ROADSIDE WEATHER INFORMATION SYSTEM
SB	SLIP BASE
SIC	SIGNAL INTERCONNECT CABLE
Sig	SIGNAL
SMA	SIGNAL MAST ARM
SNS	STREET NAME SIGN
SP	SERVICE POINT
TDC	TELEPHONE DEMARCATION CABINET
TMS	TRAFFIC MONITORING STATION
TOS	TRAFFIC OPERATIONS SYSTEM
Veh	VEHICLE
VIVDS	VIDEO IMAGE VEHICLE DETECTION SYSTEM
WIM	WEIGH-IN-MOTION
Xfmr	TRANSFORMER

SOFFIT AND WALL MOUNTED LUMINAIRES

- PENDANT, 70 W HPS UNLESS OTHERWISE SPECIFIED
- FLUSH, 70 W HPS UNLESS OTHERWISE SPECIFIED
- WALL SURFACE, 70 W HPS UNLESS OTHERWISE SPECIFIED
- EXISTING SOFFIT OR WALL LUMINAIRE TO REMAIN UNMODIFIED
- EXISTING SOFFIT OR WALL LUMINAIRE TO BE MODIFIED AS SPECIFIED

NOTE:
Arrow indicates "street side" of luminaire.

COMMONLY USED SYMBOLS FOR UNITED STATES CUSTOMARY UNITS OF MEASUREMENT:

SYMBOL USED	DEFINITIONS
Ω	OHMS
min	MINUTE
s	SECOND
bps	BITS PER SECOND
Bps	BYTES PER SECOND
A	AMPERE
V	VOLT
V(dc)	VOLT (DIRECT CURRENT)
V(ac)	VOLT (ALTERNATING CURRENT)
FC	FOOT - CANDLE
W	WATTS
VA	VOLT-AMPERE
M	MEGA
k	KILO
m	MILLI
μ	MICRO
P	PICO
Hz	HERTZ

MISCELLANEOUS ELECTROLIERS

NEW	EXISTING	
		LUMINAIRE ON WOOD POLE
		NON-STANDARD ELECTROLIER (SEE PROJECT NOTES OR PROJECT PLANS)
		CITY ELECTROLIER
		ELECTROLIER FOUNDATION (FUTURE INSTALLATION)

NOTES:

1. HPS luminaires shall be 310 W HPS when installed on Type 21, 21D, 30, 31 and 32 Standards, unless otherwise specified. HPS luminaires shall be 200 W when installed on other type standards or poles, unless otherwise specified.
2. LED luminaires shall be 235 W when installed on Type 21, 21D, 30, 31 and 32 Standards, unless otherwise specified. LED luminaires shall be 165 W when installed on other type standards or poles, unless otherwise specified.
3. Luminaires shall be the cutoff type, ANSI Type III medium cutoff lighting distribution, unless otherwise specified.

STANDARD ELECTROLIER

NEW	EXISTING	STANDARD TYPE
		15
		15D
		15 STRUCTURE
		15D STRUCTURE
		21
		21D
		21 STRUCTURE
		21D STRUCTURE
		30
		31
		32

STATE OF CALIFORNIA
DEPARTMENT OF TRANSPORTATION

ELECTRICAL SYSTEMS (LEGEND AND ABBREVIATIONS)

NO SCALE

RSP ES-1A DATED JULY 19, 2013 SUPERSEDES STANDARD PLAN ES-1A DATED MAY 20, 2011 - PAGE 425 OF THE STANDARD PLANS BOOK DATED 2010.

REVISED STANDARD PLAN RSP ES-1A

2010 REVISED STANDARD PLAN RSP ES-1A

DATE PLOTTED => 24-JUN-2015
TIME PLOTTED => 11:23

Dist	COUNTY	ROUTE	POST MILES TOTAL PROJECT	SHEET No.	TOTAL SHEETS
02	Mod	139	R10.7/28.0	145	149

Theresa Gabriel
REGISTERED ELECTRICAL ENGINEER

July 19, 2013
PLANS APPROVAL DATE

REGISTERED PROFESSIONAL ENGINEER Theresa Aziz Gabriel No. E15129 Exp. 6-30-14 ELECTRICAL STATE OF CALIFORNIA

THE STATE OF CALIFORNIA OR ITS OFFICERS OR AGENTS SHALL NOT BE RESPONSIBLE FOR THE ACCURACY OR COMPLETENESS OF SCANNED COPIES OF THIS PLAN SHEET.

TO ACCOMPANY PLANS DATED 06-15-15

CONDUIT

NEW	EXISTING	
		LIGHTING CONDUIT, UNLESS OTHERWISE INDICATED OR NOTED
		TRAFFIC SIGNAL CONDUIT
C	c	COMMUNICATION CONDUIT
T	t	TELEPHONE CONDUIT
F	f	FIRE ALARM CONDUIT
FO	fo	FIBER OPTIC CONDUIT
		CONDUIT TERMINATION
R	r	CONDUIT RISER ATTACHED TO THE STRUCTURE OR SERVICE POLE

SERVICE EQUIPMENT

NEW	EXISTING	
OH	oh	OVERHEAD LINES
U	U	WOOD POLE, "U" INDICATES UTILITY OWNED
		POLE GUY WITH ANCHOR
		UTILITY TRANSFORMER - GROUND MOUNTED
III	III	SERVICE EQUIPMENT ENCLOSURE TYPE. DOOR INDICATES FRONT OF ENCLOSURE
T	t	TELEPHONE DEMARCATION CABINET

POLE-MOUNTED SERVICE DESIGNATION

TYPE H SERVICE, 28'-10" — TYPE OF INSTALLATION AND POLE HEIGHT ABOVE GRADE

FLASHING BEACON

NEW	EXISTING	
R	R	FLASHING BEACON (ONE VEHICLE SIGNAL HEAD WITH BACKPLATE AND VISOR) "R" INDICATES RED INDICATION, "Y" INDICATES YELLOW INDICATION
Y Y	Y Y	FLASHING BEACON WITH TYPE 15-FBS STANDARD AND A SIGN.
R R	R R	FLASHING BEACON WITH TYPES 9, 9A OR 9B SIGN UNLESS OTHERWISE SPECIFIED OR INDICATED

SIGNAL EQUIPMENT

NEW	EXISTING	
C	C	PEDESTRIAN SIGNAL HEAD "C" INDICATES COUNTDOWN PEDESTRIAN HEAD
		PUSH BUTTON ASSEMBLY POST
		PEDESTRIAN BARRICADE
		VEHICLE SIGNAL HEAD (WITH BACKPLATE AND 3-SECTIONS: RED, YELLOW AND GREEN)
		VEHICLE SIGNAL HEAD WITH ANGLE VISOR
PV	PV	MODIFICATIONS OF BASIC SYMBOL: "L" INDICATES ALL NON-ARROW SECTIONS LOUVERED "LG" INDICATES LOUVERED GREEN SECTION ONLY "PV" INDICATES ALL 12" SECTIONS PROGRAMMED VISIBILITY "8" INDICATES ALL 8" SECTIONS (ONLY WHEN SPECIFIED)
		VEHICLE SIGNAL HEAD CONSISTING OF RED, YELLOW AND GREEN LEFT ARROW SECTIONS
		VEHICLE SIGNAL HEAD CONSISTING OF RED AND YELLOW SECTIONS WITH AN UP GREEN ARROW SECTION
		VEHICLE SIGNAL HEAD (5 SECTION) CONSISTING OF RED, YELLOW AND GREEN SECTIONS WITH YELLOW AND GREEN RIGHT ARROW SECTIONS
		TYPE 15TS STANDARD WITH VEHICLE SIGNAL HEAD AND LUMINAIRE
		TYPE 21TS STANDARD WITH VEHICLE SIGNAL HEAD AND LUMINAIRE
		STANDARD WITH LUMINAIRE AND SIGNAL MAST ARMS AND ATTACHED VEHICLE SIGNAL HEADS
		TYPE 1 STANDARD WITH ATTACHED VEHICLE SIGNAL HEADS
		STANDARD WITH A SIGNAL MAST ARM, ATTACHED VEHICLE SIGNAL HEADS AND INTERNALLY ILLUMINATED STREET NAME SIGN
		CONTROLLER ASSEMBLY. DOOR INDICATES FRONT OF CABINET

SIGNAL EQUIPMENT Cont

NEW	EXISTING	
		GUARD POST
		TYPE 1 STANDARD WITH RAMP METERING SIGN
		OPTICAL DETECTOR FOR THE EMERGENCY VEHICLE DETECTION SYSTEM

NOTES:

1. All signal sections shall be 12" unless shown otherwise.
2. Signal heads shall be provided with backplates unless shown otherwise.

ILLUMINATED OVERHEAD SIGN

NEW	EXISTING	
		SINGLE POST, SINGLE ILLUMINATED SIGN, BALANCED BUTTERFLY
		SINGLE POST, DOUBLE ILLUMINATED SIGN, BALANCED BUTTERFLY
		SINGLE POST, SINGLE ILLUMINATED SIGN, FULL CANTILEVER
		DOUBLE POST, SINGLE ILLUMINATED SIGN
		SINGLE ILLUMINATED SIGN MOUNTED ON STRUCTURE
		DOUBLE POST, SINGLE ILLUMINATED SIGN WITH ELECTROLIER

STATE OF CALIFORNIA
DEPARTMENT OF TRANSPORTATION

ELECTRICAL SYSTEMS (LEGEND AND ABBREVIATIONS)

NO SCALE

RSP ES-1B DATED JULY 19, 2013 SUPERSEDES STANDARD PLAN ES-1B DATED MAY 20, 2011 - PAGE 426 OF THE STANDARD PLANS BOOK DATED 2010.

REVISED STANDARD PLAN RSP ES-1B

2010 REVISED STANDARD PLAN RSP ES-1B

DATE PLOTTED => 24-JUN-2015
TIME PLOTTED => 11:23

Dist	COUNTY	ROUTE	POST MILES TOTAL PROJECT	SHEET No.	TOTAL SHEETS
02	Mod	139	R10.7/28.0	146	149

Theresa Gabriel
REGISTERED ELECTRICAL ENGINEER

July 19, 2013
PLANS APPROVAL DATE

REGISTERED PROFESSIONAL ENGINEER
Theresa Aziz Gabriel
No. E15129
Exp. 6-30-14
ELECTRICAL
STATE OF CALIFORNIA

THE STATE OF CALIFORNIA OR ITS OFFICERS OR AGENTS SHALL NOT BE RESPONSIBLE FOR THE ACCURACY OR COMPLETENESS OF SCANNED COPIES OF THIS PLAN SHEET.

TO ACCOMPANY PLANS DATED 06-15-15

EQUIPMENT IDENTIFICATION

ILLUMINATED SIGN IDENTIFICATION NUMBER:

SIGN No. 12345
10 ISL SCI 1.0

- SIGN NUMBER - PLACE ON POST OR STRUCTURE
- TRANSFORMER RATING (kVA)
- LIGHTING CONTROL TYPE
- NUMBER AND TYPE OF FIXTURES

DO NOT PLACE ON STANDARD OR STRUCTURE

ELECTROLIER OR EQUIPMENT IDENTIFICATION NUMBER:

12345 - 15'-0"

- MAST ARM LENGTH, IF SHOWN. DO NOT PLACE ON STANDARD OR STRUCTURE
- EQUIPMENT NUMBER - PLACE ON STANDARD OR STRUCTURE. EXISTING EQUIPMENT NUMBERS ARE SHOWN IN PARENTHESIS

CONDUIT AND CONDUCTOR IDENTIFICATION:

1½"C, 2#10, 15#14, 2 DLC, 12P#18

- PAIR
- NUMBER AND SIZE OF CONDUCTORS AND CABLES
- SIZE OF CONDUIT IN INCHES

Ø1, Ø2, Ø2P, etc.	TRAFFIC PHASE IDENTIFICATION FOR SIGNAL FACES, DETECTORS AND PHASE DIAGRAMS
1 2 3	LEGEND NUMBERS
A B C	EQUIPMENT, SIGNAL POLES, INSTALLATION OR ITEMS
1 2 3	CONDUIT RUN NUMBERS

SIGNAL AND LIGHTING STANDARD (TYPICAL DESIGNATION):

19A - 3 - 100

- WIND VELOCITY = 100 mph
- CASE 3 ARM LOADING
- STANDARD TYPE
- STANDARD PLAN SHEET NUMBER
- DETAIL, NUMBER, SECTION, TYPE OR ELEVATION

MISCELLANEOUS EQUIPMENT

NEW	EXISTING	
CMS	cms	CHANGEABLE MESSAGE SIGN
		CLOSED CIRCUIT TELEVISION CAMERA
		HIGHWAY ADVISORY RADIO POLE AND ANTENNA
EMS	ems	EXTINGUISHABLE MESSAGE SIGN
M V	m v	DETECTION DEVICE M = MICROWAVE SENSOR V = VIDEO IMAGE SENSOR

WIRING DIAGRAM LEGEND

- EXTERNAL CONDUCTOR
- CONDUCTOR OR BUS
- TIE POINT
- CONTACTOR COIL
- CONTACTOR, NO CONTACT
- TERMINAL BLOCKS
- CONTACTOR, NC CONTACT
- ENCLOSURE BOND
- GROUNDING ELECTRODE
- CIRCUIT BREAKER
- RECEPTACLE

PULL BOXES

NEW	EXISTING	
		PULL BOX, No. 5 UNLESS OTHERWISE INDICATED OR NOTED
3	9A(21)	PULL BOX, ADDITIONAL DESIGNATIONS OR DESCRIPTIONS

3 No. 3½ PULL BOX
5 No. 5 PULL BOX
6 No. 6 PULL BOX
7 No. 7 (CEILING PULL BOX)
8 No. 8 (PENDANT SOFFIT PULL BOX)
9 No. 9 PULL BOX
9A No. 9A PULL BOX

(C) COMMUNICATIONS PULL BOX
(E) PULL BOX WITH EXTENSION
(S) SPRINKLER CONTROL PULL BOX
(21) ANCHOR BOLTS AND CONDUIT FOR FUTURE INSTALLATION OF TYPE 21 STANDARD
(T) TRAFFIC PULL BOX

VEHICLE DETECTORS

5 J 9 U

- VEHICLE DETECTOR DESIGNATION
- U = UPPER
  L = LOWER
- SLOT NUMBER IN INPUT FILE
- INPUT FILE (I OR J)
- PHASE

NEW	EXISTING	
		TYPE A DETECTOR LOOP. OUTLINE OF SAWCUT SHOWN
		TYPE B DETECTOR LOOP. OUTLINE OF SAWCUT SHOWN
		TYPE C DETECTOR LOOP. OUTLINE OF SAWCUT SHOWN
		TYPE D DETECTOR LOOP. OUTLINE OF SAWCUT SHOWN
		TYPE E DETECTOR LOOP. OUTLINE OF SAWCUT SHOWN
		TYPE Q DETECTOR LOOP. OUTLINE OF SAWCUT SHOWN
		MAGNETIC DETECTOR
DH	dh	DETECTOR HANDHOLE
		MICROWAVE OR VIDEO DETECTION ZONE

STATE OF CALIFORNIA
DEPARTMENT OF TRANSPORTATION

ELECTRICAL SYSTEMS (LEGEND AND ABBREVIATIONS)

NO SCALE

RSP ES-1C DATED JULY 19, 2013 SUPERSEDES STANDARD PLAN ES-1C DATED MAY 20, 2011 - PAGE 427 OF THE STANDARD PLANS BOOK DATED 2010.

REVISED STANDARD PLAN RSP ES-1C

2010 REVISED STANDARD PLAN RSP ES-1C

DATE PLOTTED => 24-JUN-2015
TIME PLOTTED => 11:23

Dist	COUNTY	ROUTE	POST MILES TOTAL PROJECT	SHEET No.	TOTAL SHEETS
02	Mod	139	R10.7/28.0	147	149

Theresa Gabriel
REGISTERED ELECTRICAL ENGINEER

July 19, 2013
PLANS APPROVAL DATE

REGISTERED PROFESSIONAL ENGINEER
Theresa Aziz Gabriel
No. E15129
Exp. 6-30-14
ELECTRICAL
STATE OF CALIFORNIA

THE STATE OF CALIFORNIA OR ITS OFFICERS OR AGENTS SHALL NOT BE RESPONSIBLE FOR THE ACCURACY OR COMPLETENESS OF SCANNED COPIES OF THIS PLAN SHEET.

TO ACCOMPANY PLANS DATED 06-15-15

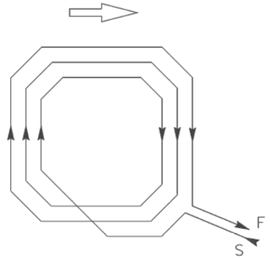

WINDING DETAIL

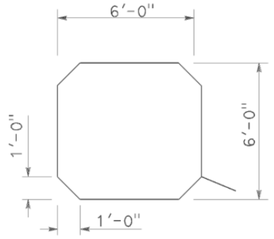

SAWCUT DETAIL

TYPE A LOOP DETECTOR CONFIGURATION

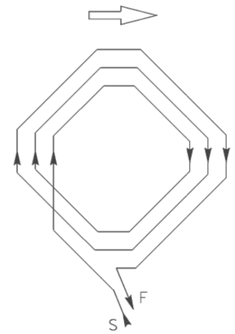

WINDING DETAIL

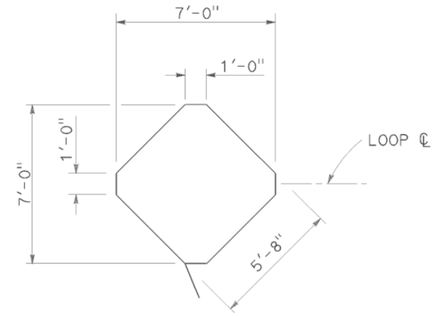

SAWCUT DETAIL

TYPE B LOOP DETECTOR CONFIGURATION

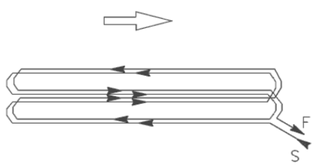

WINDING DETAIL

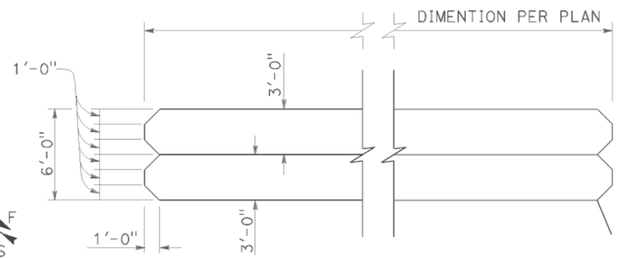

SAWCUT DETAIL

TYPE C LOOP DETECTOR CONFIGURATION

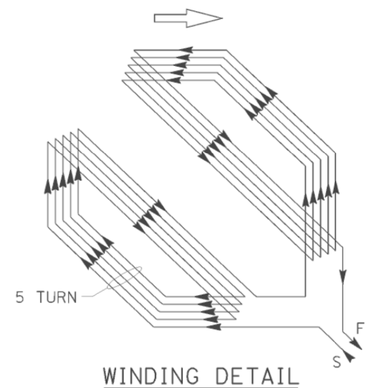

WINDING DETAIL

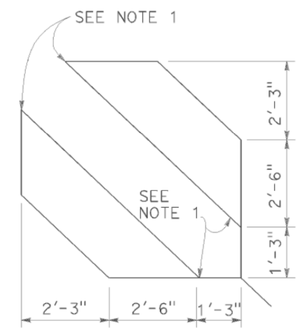

SAWCUT DETAIL

TYPE D LOOP DETECTOR CONFIGURATION

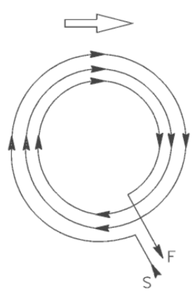

WINDING DETAIL

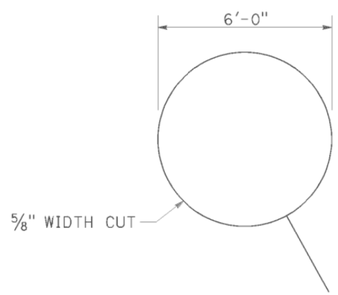

SAWCUT DETAIL

TYPE E LOOP DETECTOR CONFIGURATION

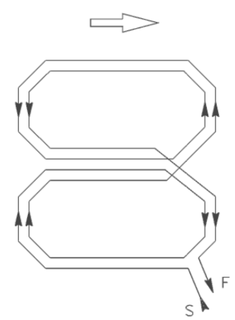

WINDING DETAIL

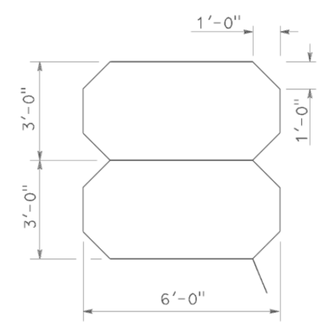

SAWCUT DETAIL

TYPE Q LOOP DETECTOR CONFIGURATION

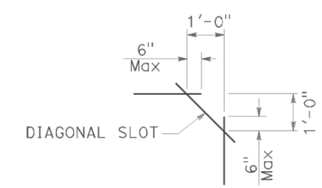

PLAN VIEW OF DIAGONAL SLOT AT CORNERS

NOTES:

1. Round corners of acute angle sawcuts to prevent damage to conductors.
2. Typical distance separating loops from edge to edge is 10' for Type A, B, D and E installation in single lane.

STATE OF CALIFORNIA
DEPARTMENT OF TRANSPORTATION

ELECTRICAL SYSTEMS (DETECTORS)

NO SCALE

RSP ES-5B DATED JULY 19, 2013 SUPERSEDES STANDARD PLAN ES-5B DATED MAY 20, 2011 - PAGE 449 OF THE STANDARD PLANS BOOK DATED 2010.

REVISED STANDARD PLAN RSP ES-5B

2010 REVISED STANDARD PLAN RSP ES-5B

DATE PLOTTED => 24-JUN-2015
TIME PLOTTED => 11:23

Dist	COUNTY	ROUTE	POST MILES TOTAL PROJECT	SHEET No.	TOTAL SHEETS
02	Mod	139	R10.7/28.0	148	149

Theresa Gabriel
REGISTERED ELECTRICAL ENGINEER

July 19, 2013
PLANS APPROVAL DATE

REGISTERED PROFESSIONAL ENGINEER — Theresa Aziz Gabriel — No. E15129 — Exp. 6-30-14 — ELECTRICAL — STATE OF CALIFORNIA

THE STATE OF CALIFORNIA OR ITS OFFICERS OR AGENTS SHALL NOT BE RESPONSIBLE FOR THE ACCURACY OR COMPLETENESS OF SCANNED COPIES OF THIS PLAN SHEET.

TO ACCOMPANY PLANS DATED 06-15-15

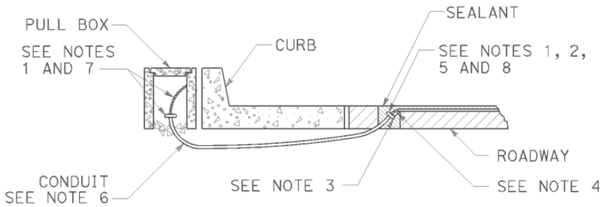

TYPE A
CURB TERMINATION DETAIL

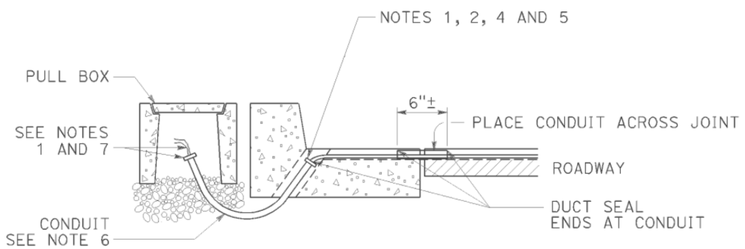

CROSS SECTION

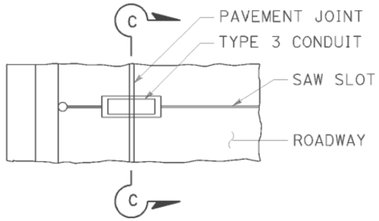

PLAN VIEW

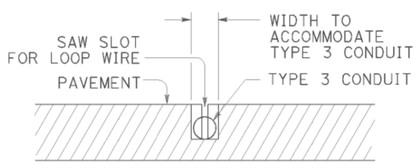

SECTION C-C

TYPE B
CURB TERMINATION DETAIL

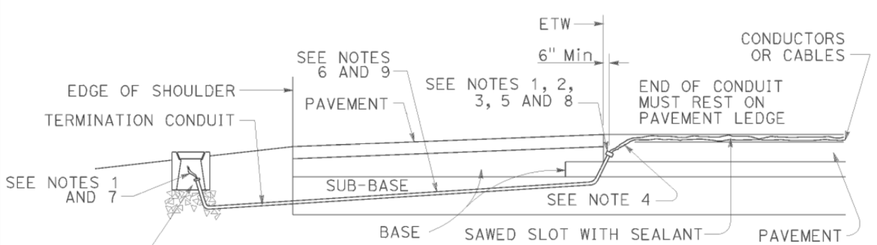

CROSS SECTION

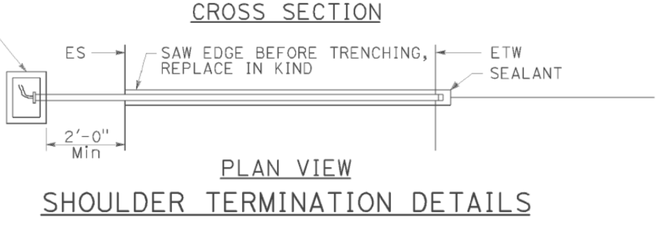

PLAN VIEW

SHOULDER TERMINATION DETAILS

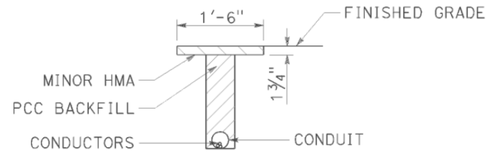

"T" TRENCH
DETAIL T

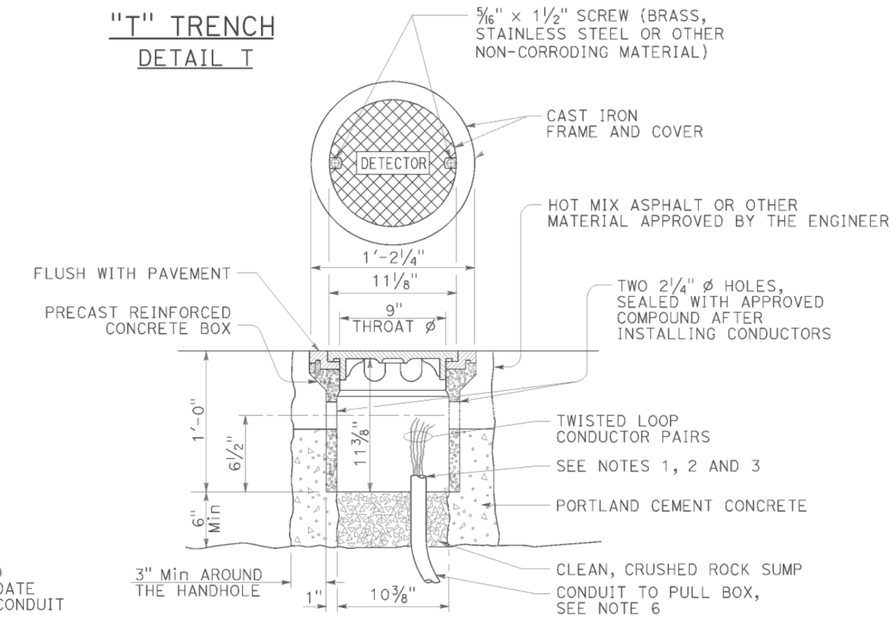

DETECTOR HANDHOLE DETAIL

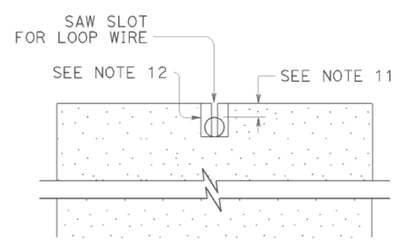

SECTION A-A

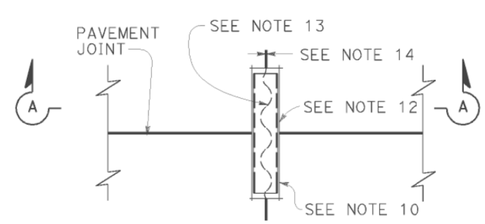

PLAN VIEW

TYPICAL LOOP LEAD-IN DETAIL
AT PAVEMENT JOINT

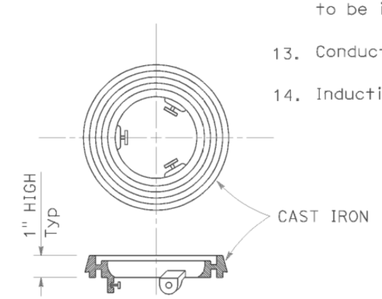

LOCKING GRADE RING

NOTES:

1. Bushing shall be used at end of conduit.
2. Tape detector conductors or cables 3" each side of bushings.
3. Install duct seal compound to each end of termination conduit before installing sealant.
4. Round all sharp edges where detector conductors or cables have to pass.
5. End of conduit shall be 3⅛" below roadway surface.
6.

Conduit size	Loop conductors
1"C minimum	1 to 2 pairs
1½"C minimum	3 to 4 pairs
2"C minimum	5 or more pairs

7. Splice detector conductors or cables to detector lead-in-cable.
8. Location of detector handhole when shown on plans.
9. When the shoulder and traveled way are paved with the same material and there is no joint between them, the conduit shall extend only 2'-0" into the shoulder pavement.
10. ¾"C, Type 3 conduit 6" long minimum, plug both ends with duct compound to keep out sealant.
11. ½" Minimum between top of conduit and pavement surface.
12. Sawcut shall not exceed 1" in width and ⅛" longer than conduit to be installed.
13. Conductors with ½" minimum slack inside conduit.
14. Inductive loop detector saw slot.

STATE OF CALIFORNIA
DEPARTMENT OF TRANSPORTATION

ELECTRICAL SYSTEMS (CURB TERMINATION AND HANDHOLE)

NO SCALE

RSP ES-5D DATED JULY 19, 2013 SUPERSEDES STANDARD PLAN ES-5D DATED MAY 20, 2011 - PAGE 451 OF THE STANDARD PLANS BOOK DATED 2010.

REVISED STANDARD PLAN RSP ES-5D

2010 REVISED STANDARD PLAN RSP ES-5D

DATE PLOTTED => 24-JUN-2015
TIME PLOTTED => 11:23

DIST	COUNTY	ROUTE	POST MILES TOTAL PROJECT	SHEET No.	TOTAL SHEETS
02	Mod	139	R10.7/28.0	149	149

REGISTERED CIVIL ENGINEER

November 15, 2013
PLANS APPROVAL DATE

REGISTERED PROFESSIONAL ENGINEER
Cornelis M. Hakim
No. C55610
Exp. 12-31-14
CIVIL
STATE OF CALIFORNIA

THE STATE OF CALIFORNIA OR ITS OFFICERS OR AGENTS SHALL NOT BE RESPONSIBLE FOR THE ACCURACY OR COMPLETENESS OF SCANNED COPIES OF THIS PLAN SHEET.

TO ACCOMPANY PLANS DATED 06-15-15

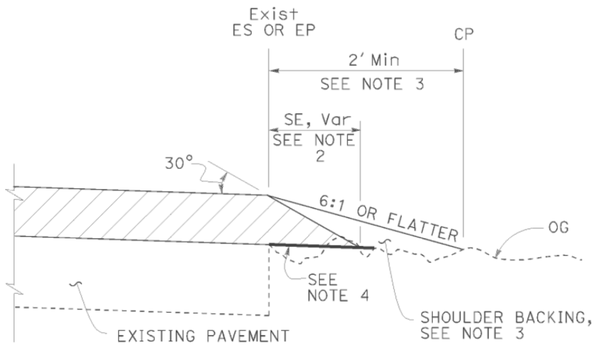

CASE A
Safety Edge

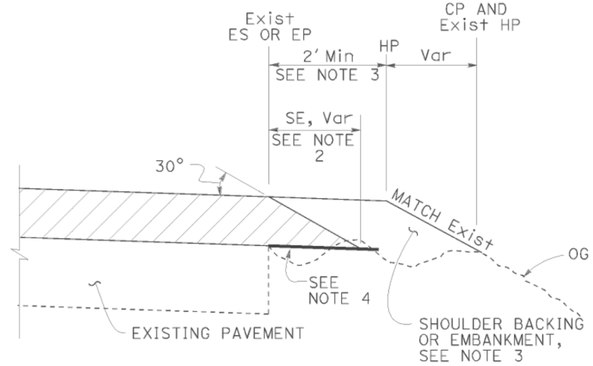

CASE B
Safety Edge

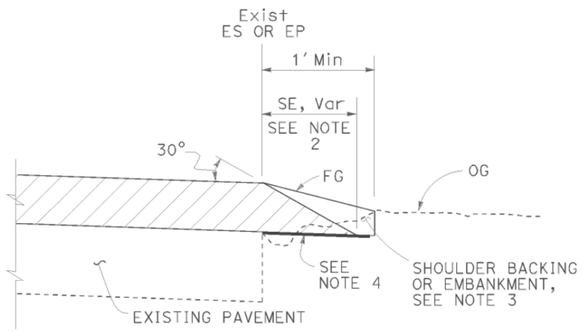

CASE C
Safety Edge

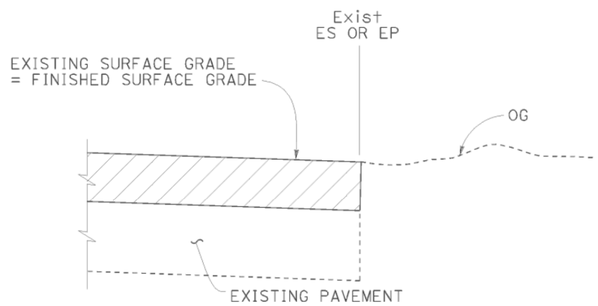

CASE D
Vertical Edge

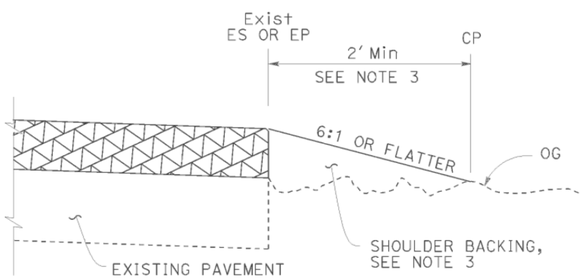

CASE E
Vertical Edge

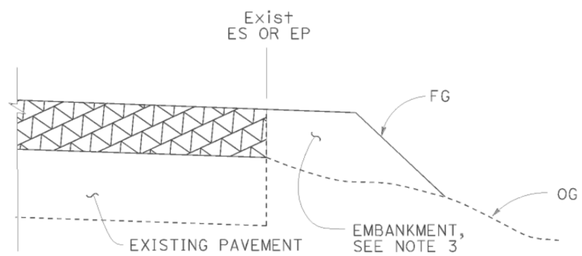

CASE F
Vertical Edge
* See Table A and Revised Std Plan RSP P74

LEGEND:

- HMA OVERLAY
- HMA OR CONCRETE OVERLAY
- CONCRETE OVERLAY

ABBREVIATIONS:

SE SAFETY EDGE
TT TOTAL THICKNESS OF SE

TABLE A
EDGE TREATMENT FOR VARIOUS OVERLAY THICKNESS AND CONDITIONS

	OVERLAY THICKNESS	
FIELD CONDITION	LESS THAN 0.15'	0.15' OR MORE
Exist SLOPE 6:1 OR FLATTER	CASE E	CASE A
Exist SLOPE 3:1 TO 6:1	CASE E	CASE B
Exist SLOPE STEEPER THAN 3:1	CASE F	CASE F
CUT SECTION (REPLACE, COLD PLANE, MILL PAVEMENT)	CASE D	CASE C

ADDITIONAL HMA OR CONCRETE QUANTITIES FOR SE/SIDE/MILE

TYPICAL CROSS SECTION	TT	TOTAL ADDITIONAL MATERIAL FOR SE/SIDE/MILE		
		HMA (TON)	CONCRETE (CY)*	CONCRETE (CY)**
TT	0.15'	NA	NA	NA
	0.20'	13.7	NA	NA
	0.30'	30.9	NA	NA
	0.40'	54.9	NA	NA
	0.45'	69.4	NA	NA
TT 0.43'	0.50'	84.2	NA	NA
	0.60'	113.9	NA	NA
	0.70'	143.6	70.9	94.2
	0.80'	173.3	85.6	112.2
	0.90'	203.0	100.3	130.2
	1.00'	232.7	114.9	148.2
	1.10'	262.4	129.6	166.2
	1.20'	292.1	144.3	184.2

* For Detail "A"
** For Optional Detail "A"

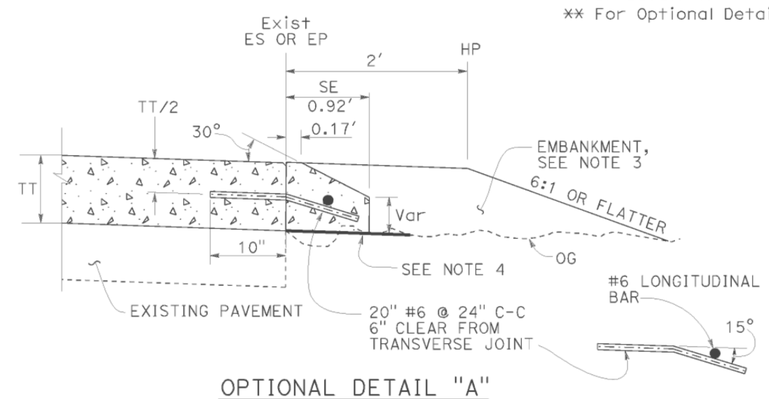

OPTIONAL DETAIL "A"
For concrete overlay
See Note 5

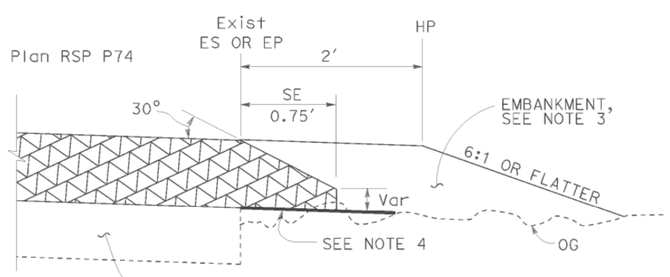

DETAIL "A"
For HMA overlay thickness more than 0.43' or concrete overlay

NOTES:

1. For limits of safety edge and vertical edge treatments, see Revised Standard Plan RSP P74.
2. Details shown for HMA overlay thickness less than 0.43'. See Detail "A" for HMA overlay thickness more than 0.43' or concrete overlay.
3. For locations and limits of shoulder backing or embankment see project plans.
4. Grade existing ground to place safety edge. 1' minimum width
5. Safety edge transverse joint must match overlay transverse joint. End of #6 longitudinal bar must be 2" ±½" clear from transverse joint.
6. Safety edge is not needed in the area of MGS, barrier, right turn lane and acceleration lane. See Revised Standard Plan RSP P74.

STATE OF CALIFORNIA
DEPARTMENT OF TRANSPORTATION

PAVEMENT EDGE TREATMENTS-OVERLAYS

NO SCALE

RSP P75 DATED NOVEMBER 15, 2013 SUPERSEDES RSP P75 DATED JANUARY 20, 2012 THAT SUPPLEMENTS THE STANDARD PLANS BOOK DATED 2010.

REVISED STANDARD PLAN RSP P75

2010 REVISED STANDARD PLAN RSP P75

DATE PLOTTED => 24-JUN-2015
TIME PLOTTED => 11:23