Dist	COUNTY	ROUTE	POST MILES TOTAL PROJECT	SHEET No.	TOTAL SHEETS
02	Sha	299	0.3/7.1	301	401

REGISTERED CIVIL ENGINEER 03-04-14 DATE

06-09-14
PLANS APPROVAL DATE

REGISTERED PROFESSIONAL ENGINEER SOCORRO V. URENA No. C79633 Exp. 9-30-14 CIVIL STATE OF CALIFORNIA

THE STATE OF CALIFORNIA OR ITS OFFICERS OR AGENTS SHALL NOT BE RESPONSIBLE FOR THE ACCURACY OR COMPLETENESS OF SCANNED COPIES OF THIS PLAN SHEET.

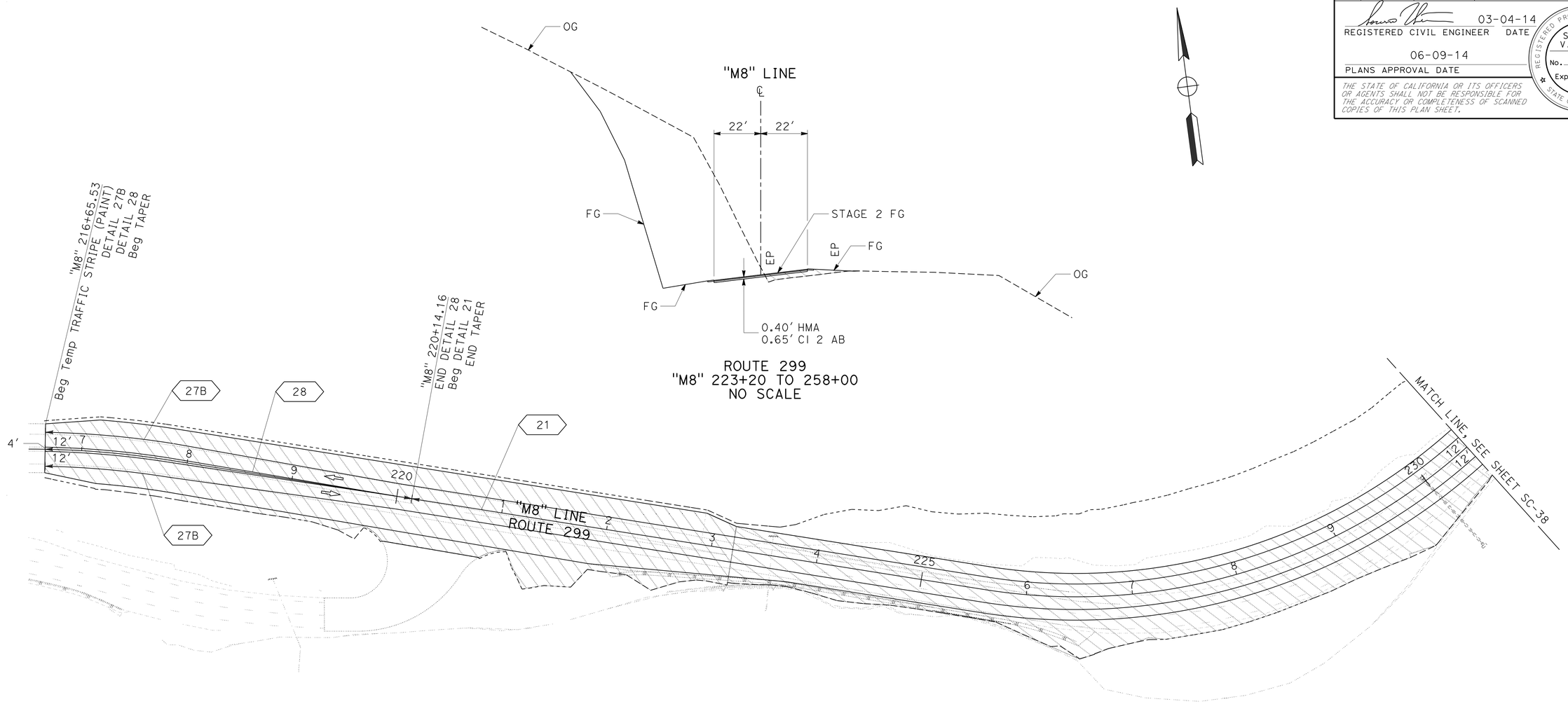

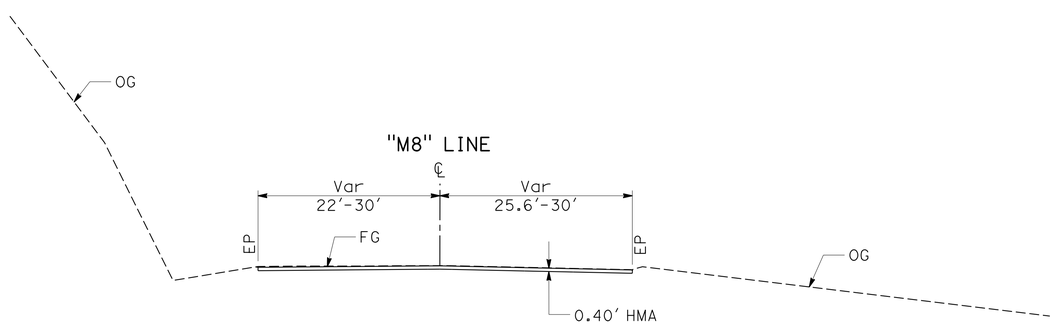

STAGE CONSTRUCTION AND TRAFFIC HANDLING PLAN (STAGE 2D)

SCALE: 1" = 50′

APPROVED FOR STAGE CONSTRUCTION AND TRAFFIC HANDLING WORK ONLY

SC-37

REVISED BY	DATE REVISED

CALCULATED-DESIGNED BY: SOCORRO URENA
CHECKED BY: MICHAEL FEAKES
FUNCTIONAL SUPERVISOR: AL TRUJILLO

STATE OF CALIFORNIA - DEPARTMENT OF TRANSPORTATION
Caltrans® DESIGN

P:\proj1\02\3E410_plans\pse\23e410ma037.dgn

LAST REVISION 03-04-14 | DATE PLOTTED => 25-AUG-2014 TIME PLOTTED => 09:24

Dist	COUNTY	ROUTE	POST MILES TOTAL PROJECT	SHEET No.	TOTAL SHEETS
02	Sha	299	0.3/7.1	302	401

REGISTERED CIVIL ENGINEER 03-04-14 DATE

06-09-14
PLANS APPROVAL DATE

REGISTERED PROFESSIONAL ENGINEER
SOCORRO V. URENA
No. C79633
Exp. 9-30-14
CIVIL
STATE OF CALIFORNIA

THE STATE OF CALIFORNIA OR ITS OFFICERS OR AGENTS SHALL NOT BE RESPONSIBLE FOR THE ACCURACY OR COMPLETENESS OF SCANNED COPIES OF THIS PLAN SHEET.

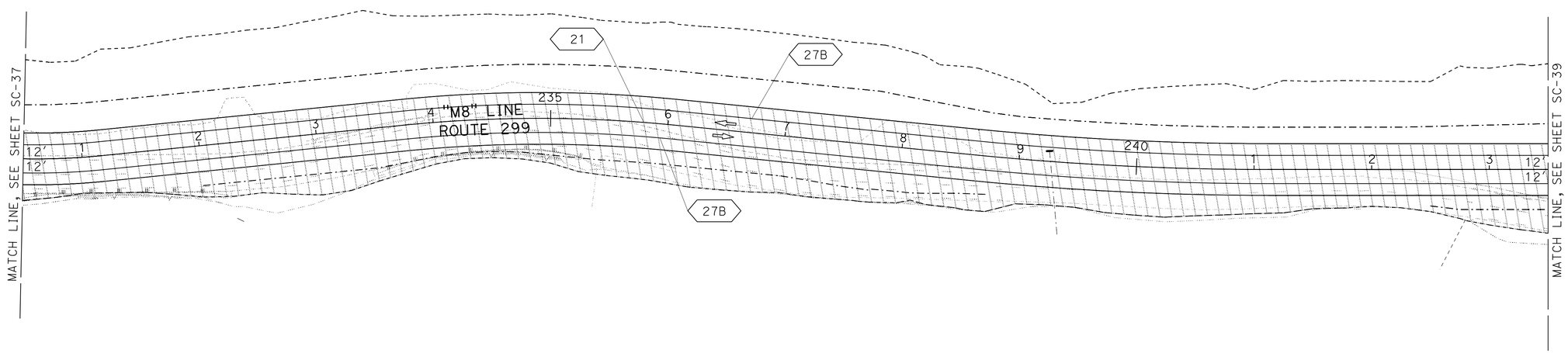

STAGE CONSTRUCTION AND TRAFFIC HANDLING PLAN (STAGE 2D)

SCALE: 1" = 50'

APPROVED FOR STAGE CONSTRUCTION AND TRAFFIC HANDLING WORK ONLY

SC-38

REVISED BY | DATE REVISED

SOCORRO URENA | MICHAEL FEAKES

CALCULATED-DESIGNED BY | CHECKED BY

FUNCTIONAL SUPERVISOR: AL TRUJILLO

STATE OF CALIFORNIA - DEPARTMENT OF TRANSPORTATION
Caltrans
DESIGN

P:\proj1\02\3E410_plans\pse\23e410ma038.dgn

LAST REVISION 03-04-14 | DATE PLOTTED => 25-AUG-2014 | TIME PLOTTED => 09:24

BORDER LAST REVISED 7/2/2010 | USERNAME => s115152 | DGN FILE => 23e410ma038.dgn | RELATIVE BORDER SCALE IS IN INCHES 0 1 2 3 | UNIT 0316 | PROJECT NUMBER & PHASE 02-0002-0042-1 | EA: 02-3E4101

Dist	COUNTY	ROUTE	POST MILES TOTAL PROJECT	SHEET No.	TOTAL SHEETS
02	Sha	299	0.3/7.1	303	401

REGISTERED CIVIL ENGINEER 03-04-14 DATE

06-09-14
PLANS APPROVAL DATE

REGISTERED PROFESSIONAL ENGINEER
SOCORRO V. URENA
No. C79633
Exp. 9-30-14
CIVIL
STATE OF CALIFORNIA

THE STATE OF CALIFORNIA OR ITS OFFICERS OR AGENTS SHALL NOT BE RESPONSIBLE FOR THE ACCURACY OR COMPLETENESS OF SCANNED COPIES OF THIS PLAN SHEET.

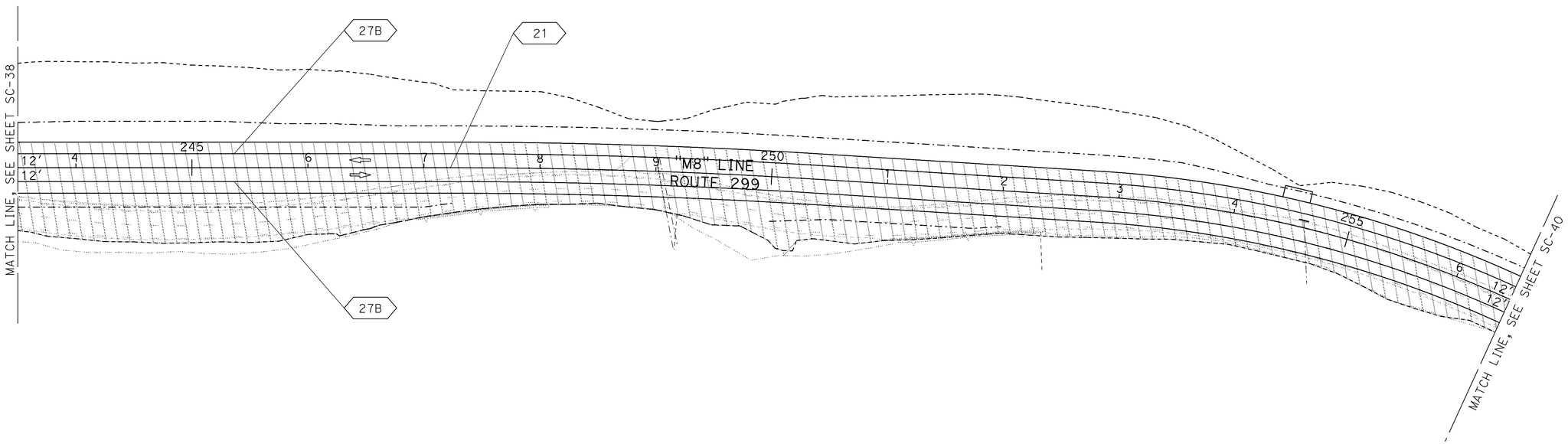

STAGE CONSTRUCTION AND TRAFFIC HANDLING PLAN (STAGE 2D)

SCALE: 1" = 50'

SC-39

APPROVED FOR STAGE CONSTRUCTION AND TRAFFIC HANDLING WORK ONLY

STATE OF CALIFORNIA - DEPARTMENT OF TRANSPORTATION
Caltrans®
DESIGN

FUNCTIONAL SUPERVISOR: AL TRUJILLO
CALCULATED-DESIGNED BY: SOCORRO URENA
CHECKED BY: MICHAEL FEAKES
REVISED BY
DATE REVISED

P:\proj1\02\3E410_plans\pse\23e410ma039.dgn

LAST REVISION 03-04-14 | DATE PLOTTED => 25-AUG-2014 | TIME PLOTTED => 09:24

Dist	COUNTY	ROUTE	POST MILES TOTAL PROJECT	SHEET No.	TOTAL SHEETS
02	Sha	299	0.3/7.1	304	401

REGISTERED CIVIL ENGINEER 03-04-14 DATE

06-09-14
PLANS APPROVAL DATE

REGISTERED PROFESSIONAL ENGINEER SOCORRO V. URENA No. C79633 Exp. 9-30-14 CIVIL STATE OF CALIFORNIA

THE STATE OF CALIFORNIA OR ITS OFFICERS OR AGENTS SHALL NOT BE RESPONSIBLE FOR THE ACCURACY OR COMPLETENESS OF SCANNED COPIES OF THIS PLAN SHEET.

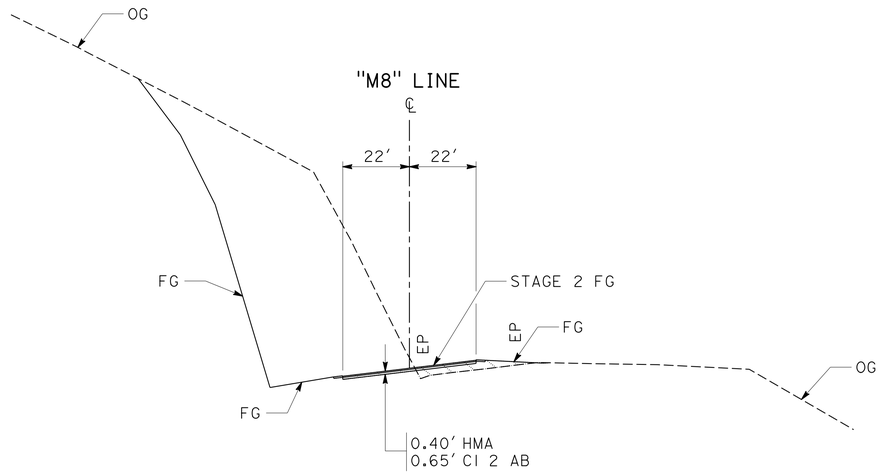

ROUTE 299
"M8" 258+00 TO 263+60
"M8" 265+60 TO 282+00
NO SCALE

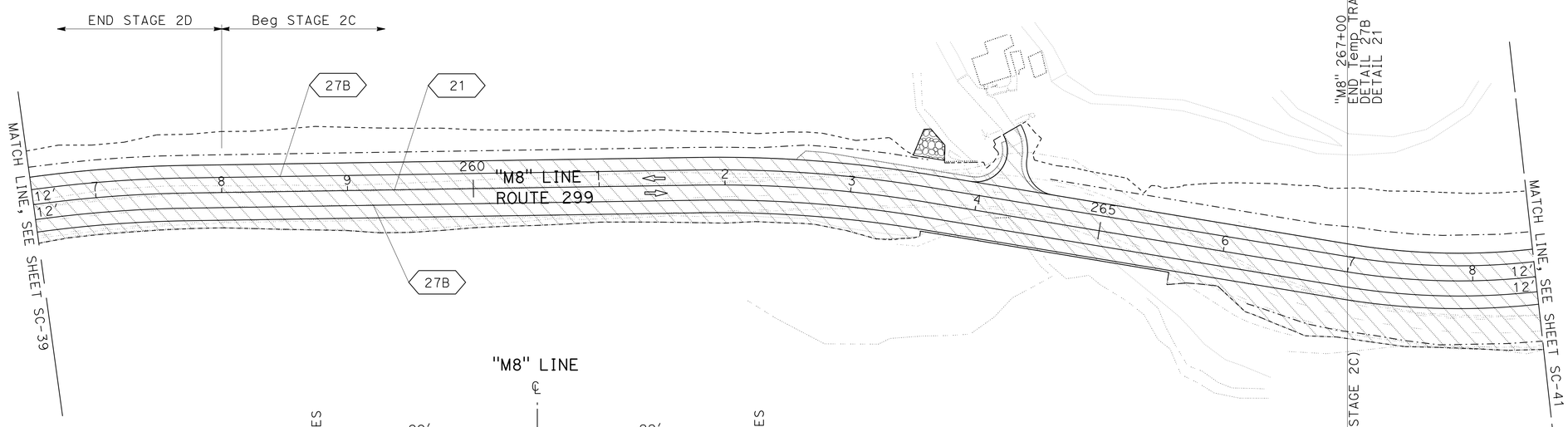

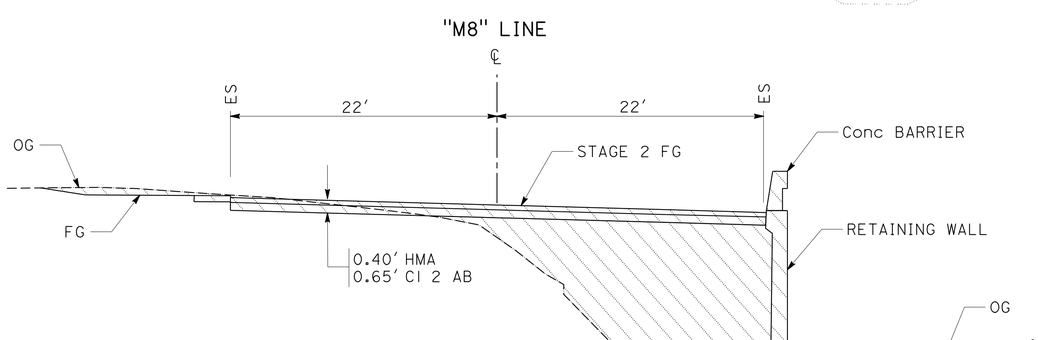

ROUTE 299
"M8" 263+60 TO 265+60
NO SCALE

STAGE CONSTRUCTION AND TRAFFIC HANDLING PLAN (STAGE 2C)

SCALE: 1" = 50'

SC-40

APPROVED FOR STAGE CONSTRUCTION AND TRAFFIC HANDLING WORK ONLY

REVISED BY	DATE REVISED

CALCULATED-DESIGNED BY: SOCORRO URENA
CHECKED BY: MICHAEL FEAKES
FUNCTIONAL SUPERVISOR: AL TRUJILLO

STATE OF CALIFORNIA - DEPARTMENT OF TRANSPORTATION
Caltrans
DESIGN

P:\proj1\02\3E410_plans\pse\23e410ma040.dgn

LAST REVISION 03-04-14 | DATE PLOTTED => 25-AUG-2014 | TIME PLOTTED => 09:24

Dist	COUNTY	ROUTE	POST MILES TOTAL PROJECT	SHEET No.	TOTAL SHEETS
02	Sha	299	0.3/7.1	305	401

REGISTERED CIVIL ENGINEER 03-04-14 DATE

06-09-14
PLANS APPROVAL DATE

REGISTERED PROFESSIONAL ENGINEER
SOCORRO V. URENA
No. C79633
Exp. 9-30-14
CIVIL
STATE OF CALIFORNIA

THE STATE OF CALIFORNIA OR ITS OFFICERS OR AGENTS SHALL NOT BE RESPONSIBLE FOR THE ACCURACY OR COMPLETENESS OF SCANNED COPIES OF THIS PLAN SHEET.

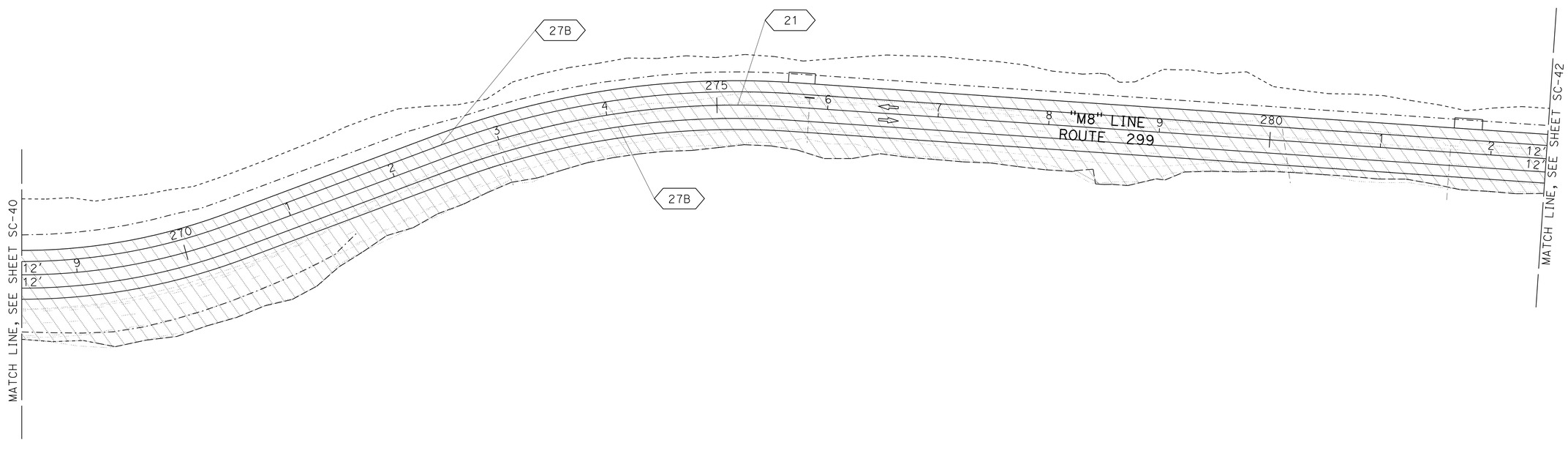

STAGE CONSTRUCTION AND TRAFFIC HANDLING PLAN (STAGE 2C)

SCALE: 1" = 50'

SC-41

APPROVED FOR STAGE CONSTRUCTION AND TRAFFIC HANDLING WORK ONLY

REVISED BY | DATE REVISED

SOCORRO URENA | MICHAEL FEAKES

CALCULATED-DESIGNED BY | CHECKED BY

FUNCTIONAL SUPERVISOR: AL TRUJILLO

STATE OF CALIFORNIA - DEPARTMENT OF TRANSPORTATION
Caltrans
DESIGN

P:\proj1\02\3E410_plans\pse\23e410ma041.dgn

LAST REVISION 03-04-14 | DATE PLOTTED => 25-AUG-2014 | TIME PLOTTED => 09:24

Dist	COUNTY	ROUTE	POST MILES TOTAL PROJECT	SHEET No.	TOTAL SHEETS
02	Sha	299	0.3/7.1	306	401

REGISTERED CIVIL ENGINEER 03-04-14 DATE

06-09-14
PLANS APPROVAL DATE

REGISTERED PROFESSIONAL ENGINEER SOCORRO V. URENA No. C79633 Exp. 9-30-14 CIVIL STATE OF CALIFORNIA

THE STATE OF CALIFORNIA OR ITS OFFICERS OR AGENTS SHALL NOT BE RESPONSIBLE FOR THE ACCURACY OR COMPLETENESS OF SCANNED COPIES OF THIS PLAN SHEET.

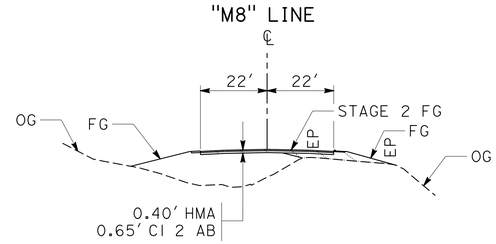

ROUTE 299
"M8" 292+25 TO 292+80
NO SCALE

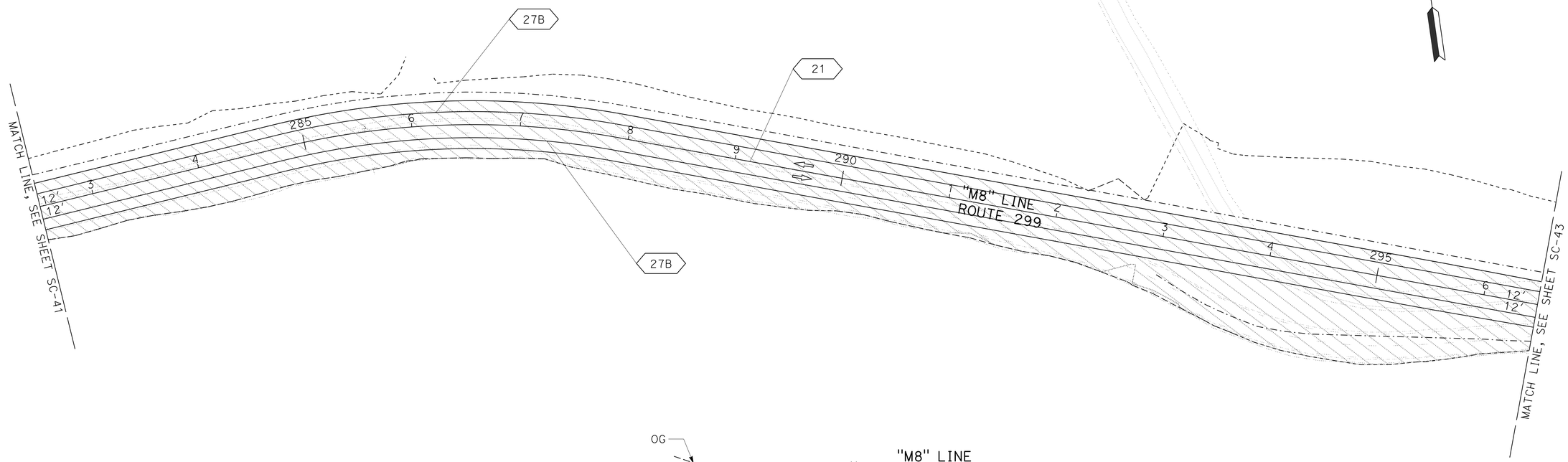

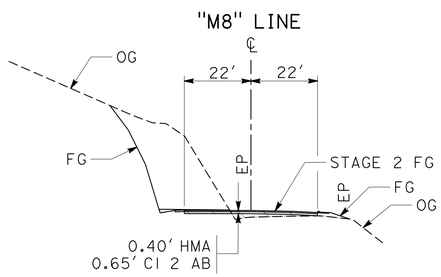

ROUTE 299
"M8" 282+00 TO 292+25
NO SCALE

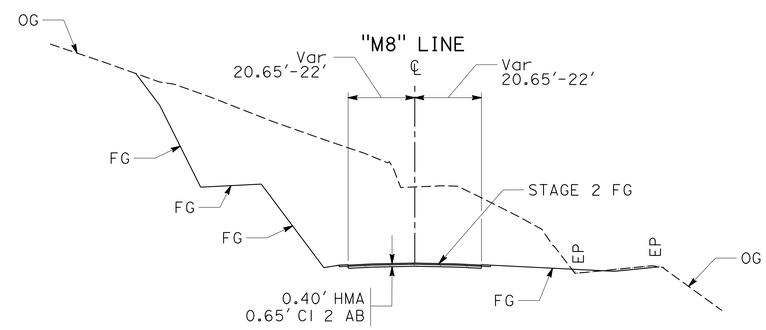

ROUTE 299
"M8" 292+80 TO 297+25
NO SCALE

STAGE CONSTRUCTION AND TRAFFIC HANDLING PLAN (STAGE 2C)

SCALE: 1" = 50′

APPROVED FOR STAGE CONSTRUCTION AND TRAFFIC HANDLING WORK ONLY

SC-42

REVISED BY	DATE REVISED

CALCULATED-DESIGNED BY: SOCORRO URENA
CHECKED BY: MICHAEL FEAKES
FUNCTIONAL SUPERVISOR: AL TRUJILLO

STATE OF CALIFORNIA - DEPARTMENT OF TRANSPORTATION
Caltrans® DESIGN

P:\proj1\02\3E410_plans\pse\23e410ma042.dgn

LAST REVISION 03-04-14 | DATE PLOTTED => 25-AUG-2014 | TIME PLOTTED => 09:24

Dist	COUNTY	ROUTE	POST MILES TOTAL PROJECT	SHEET No.	TOTAL SHEETS
02	Sha	299	0.3/7.1	307	401

REGISTERED CIVIL ENGINEER 03-04-14 DATE

06-09-14
PLANS APPROVAL DATE

REGISTERED PROFESSIONAL ENGINEER SOCORRO V. URENA No. C79633 Exp. 9-30-14 CIVIL STATE OF CALIFORNIA

THE STATE OF CALIFORNIA OR ITS OFFICERS OR AGENTS SHALL NOT BE RESPONSIBLE FOR THE ACCURACY OR COMPLETENESS OF SCANNED COPIES OF THIS PLAN SHEET.

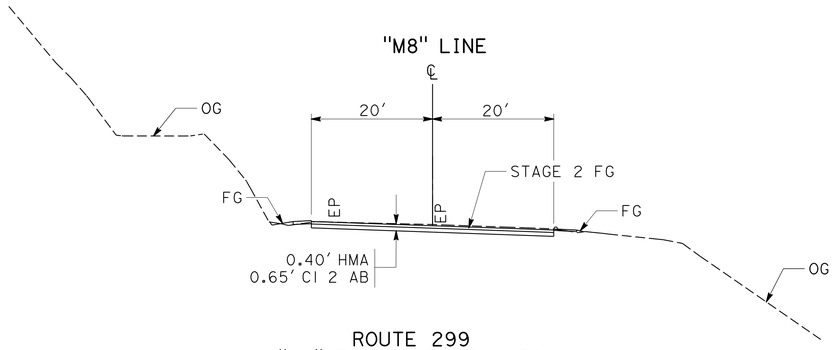

ROUTE 299
"M8" 300+25 TO 301+50
NO SCALE

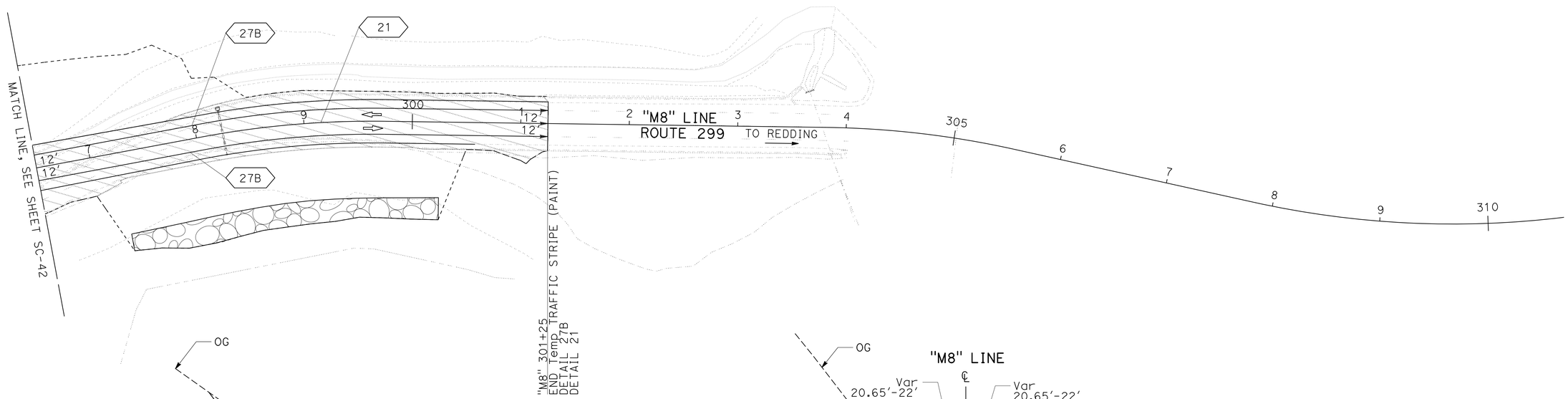

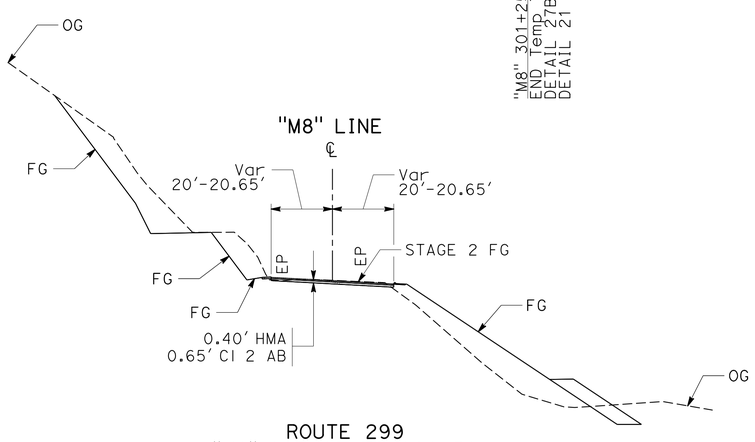

ROUTE 299
"M8" 297+25 TO 298+50
NO SCALE

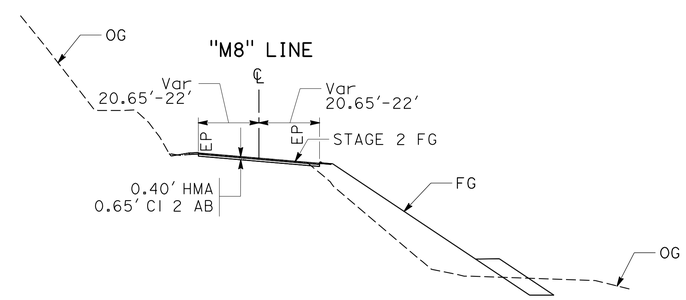

ROUTE 299
"M8" 298+50 TO 300+25
NO SCALE

STAGE CONSTRUCTION AND TRAFFIC HANDLING PLAN (STAGE 2C)

SCALE: 1" = 50′

APPROVED FOR STAGE CONSTRUCTION AND TRAFFIC HANDLING WORK ONLY

SC-43

REVISED BY | DATE REVISED

SOCORRO URENA | MICHAEL FEAKES

CALCULATED-DESIGNED BY | CHECKED BY

FUNCTIONAL SUPERVISOR: AL TRUJILLO

STATE OF CALIFORNIA - DEPARTMENT OF TRANSPORTATION
Caltrans
DESIGN

P:\proj1\02\3E410_plans\pse\23e410ma043.dgn

LAST REVISION 03-04-14 | DATE PLOTTED => 25-AUG-2014 | TIME PLOTTED => 09:24

Dist	COUNTY	ROUTE	POST MILES TOTAL PROJECT	SHEET No.	TOTAL SHEETS
02	Sha	299	0.3/7.1	308	401

REGISTERED CIVIL ENGINEER 03-04-14 DATE

PLANS APPROVAL DATE 06-09-14

REGISTERED PROFESSIONAL ENGINEER SOCORRO V. URENA No. C79633 Exp. 9-30-14 CIVIL STATE OF CALIFORNIA

THE STATE OF CALIFORNIA OR ITS OFFICERS OR AGENTS SHALL NOT BE RESPONSIBLE FOR THE ACCURACY OR COMPLETENESS OF SCANNED COPIES OF THIS PLAN SHEET.

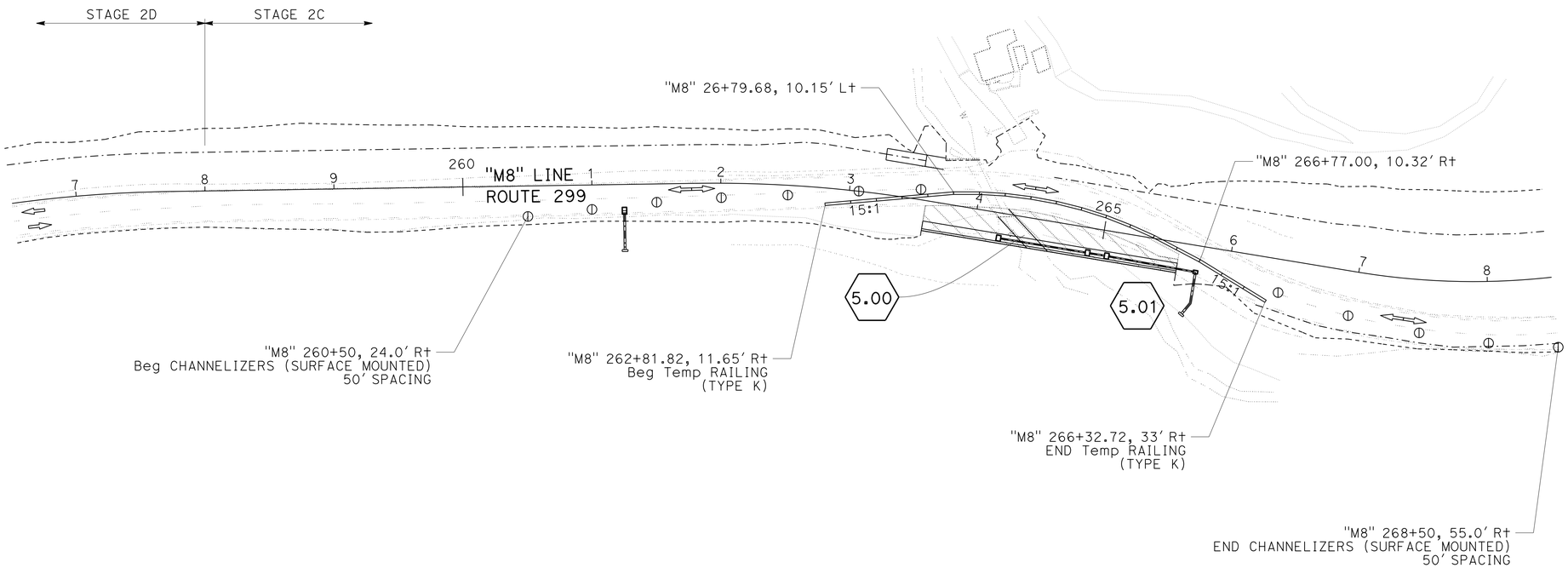

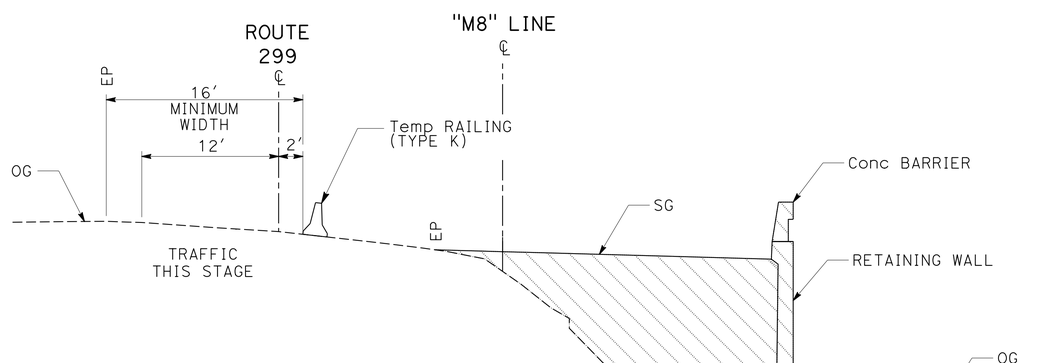

ROUTE 299
"M8" 263+60 TO 265+60
NO SCALE

APPROVED FOR STAGE CONSTRUCTION AND TRAFFIC HANDLING WORK ONLY

TEMPORARY RAILING (TYPE K) PLACEMENT

STAGE CONSTRUCTION AND TRAFFIC HANDLING PLAN (STAGE 2C)

SCALE: 1" = 50'

SC-44

REVISED BY | DATE REVISED

SOCORRO URENA | MICHAEL FEAKES

CALCULATED-DESIGNED BY | CHECKED BY

FUNCTIONAL SUPERVISOR | AL TRUJILLO

STATE OF CALIFORNIA - DEPARTMENT OF TRANSPORTATION

Caltrans® DESIGN

P:\proj1\02\3E410_plans\pse\23e410ma044.dgn

LAST REVISION 03-04-14 | DATE PLOTTED => 25-AUG-2014 | TIME PLOTTED => 09:24

Dist	COUNTY	ROUTE	POST MILES TOTAL PROJECT	SHEET No.	TOTAL SHEETS
02	Sha	299	0.3/7.1	309	401

REGISTERED CIVIL ENGINEER 03-04-14 DATE

06-09-14
PLANS APPROVAL DATE

REGISTERED PROFESSIONAL ENGINEER
SOCORRO V. URENA
No. C79633
Exp. 9-30-14
CIVIL
STATE OF CALIFORNIA

THE STATE OF CALIFORNIA OR ITS OFFICERS OR AGENTS SHALL NOT BE RESPONSIBLE FOR THE ACCURACY OR COMPLETENESS OF SCANNED COPIES OF THIS PLAN SHEET.

STAGE 3:

1. USING TRAFFIC CONTROL SYSTEM (Std PLANS RSP T11, RSP T12, RSP T13), PAVE FINAL LIFT OF HMA.
2. CONSTRUCT DIKES, MBGR, VCMC, AND FINISH ROADWAY FROM STATION "M8" 13+00.00 TO 110+27.82
3. CONSTRUCT DIKES, MBGR, VCMC, AND FINISH ROADWAY FROM STATION "M8" 216+65.53 TO 302+00.00
4. PLACE FINAL DELINEATION FROM STA "M8" 12+88.30 TO 302+00.00.

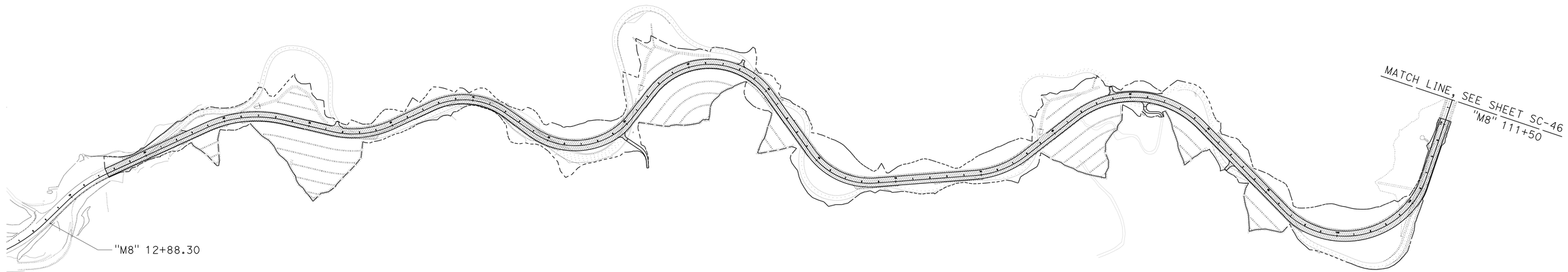

STAGE CONSTRUCTION AND TRAFFIC HANDLING PLAN (STAGE 3)

NO SCALE

SC-45

APPROVED FOR STAGE CONSTRUCTION AND TRAFFIC HANDLING WORK ONLY

REVISED BY | DATE REVISED

SOCORRO URENA | MICHAEL FEAKES

CALCULATED-DESIGNED BY | CHECKED BY

FUNCTIONAL SUPERVISOR: AL TRUJILLO

STATE OF CALIFORNIA - DEPARTMENT OF TRANSPORTATION
Caltrans
DESIGN

P:\proj1\02\3E410_plans\pse\23e410ma045.dgn

LAST REVISION 03-04-14 | DATE PLOTTED => 25-AUG-2014 | TIME PLOTTED => 09:24

Dist	COUNTY	ROUTE	POST MILES TOTAL PROJECT	SHEET No.	TOTAL SHEETS
02	Sha	299	0.3/7.1	310	401

REGISTERED CIVIL ENGINEER 03-04-14 DATE

06-09-14
PLANS APPROVAL DATE

REGISTERED PROFESSIONAL ENGINEER
SOCORRO V. URENA
No. C79633
Exp. 9-30-14
CIVIL
STATE OF CALIFORNIA

THE STATE OF CALIFORNIA OR ITS OFFICERS OR AGENTS SHALL NOT BE RESPONSIBLE FOR THE ACCURACY OR COMPLETENESS OF SCANNED COPIES OF THIS PLAN SHEET.

STAGE CONSTRUCTION AND TRAFFIC HANDLING PLAN (STAGE 3)

NO SCALE

SC-46

APPROVED FOR STAGE CONSTRUCTION AND TRAFFIC HANDLING WORK ONLY

REVISED BY | DATE REVISED

SOCORRO URENA | MICHAEL FEAKES

CALCULATED-DESIGNED BY | CHECKED BY

FUNCTIONAL SUPERVISOR: AL TRUJILLO

STATE OF CALIFORNIA - DEPARTMENT OF TRANSPORTATION
Caltrans
DESIGN

P:\proj1\02\3E410_plans\pse\23e410ma046.dgn

LAST REVISION 03-04-14 | DATE PLOTTED => 25-AUG-2014 | TIME PLOTTED => 09:24

Dist	COUNTY	ROUTE	POST MILES TOTAL PROJECT	SHEET No.	TOTAL SHEETS
02	Sha	299	0.3/7.1	311	401

03-04-14
REGISTERED CIVIL ENGINEER DATE

06-09-14
PLANS APPROVAL DATE

REGISTERED PROFESSIONAL ENGINEER
SOCORRO V. URENA
No. C79633
Exp. 9-30-14
CIVIL
STATE OF CALIFORNIA

THE STATE OF CALIFORNIA OR ITS OFFICERS OR AGENTS SHALL NOT BE RESPONSIBLE FOR THE ACCURACY OR COMPLETENESS OF SCANNED COPIES OF THIS PLAN SHEET.

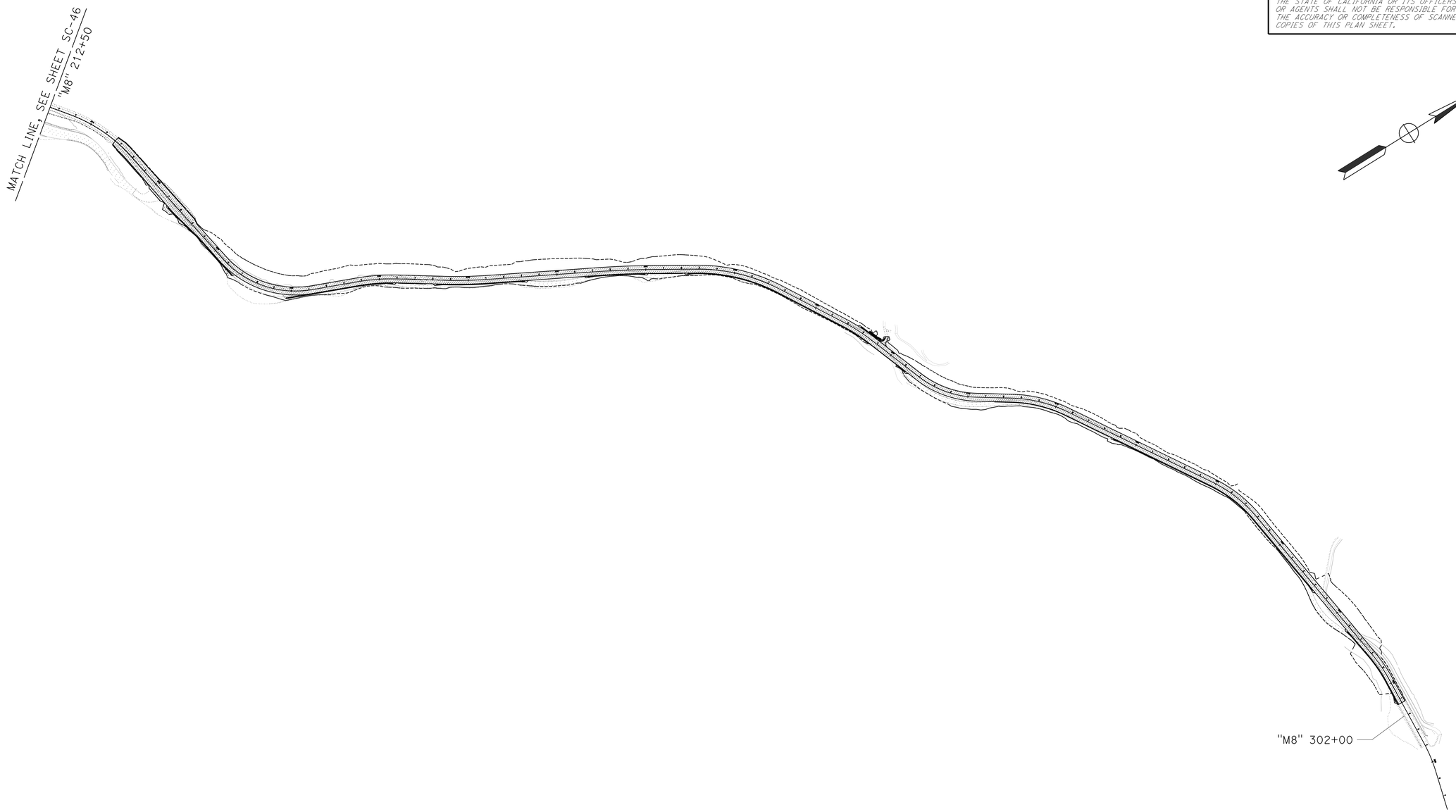

STAGE CONSTRUCTION AND TRAFFIC HANDLING PLAN (STAGE 3)

NO SCALE

SC-47

APPROVED FOR STAGE CONSTRUCTION AND TRAFFIC HANDLING WORK ONLY

REVISED BY | DATE REVISED

SOCORRO URENA | MICHAEL FEAKES

CALCULATED-DESIGNED BY | CHECKED BY

FUNCTIONAL SUPERVISOR: AL TRUJILLO

STATE OF CALIFORNIA - DEPARTMENT OF TRANSPORTATION
Caltrans
DESIGN

P:\proj1\02\3E410_plans\pse\23e410ma047.dgn

LAST REVISION 03-04-14 | DATE PLOTTED => 25-AUG-2014 | TIME PLOTTED => 09:24

Dist	COUNTY	ROUTE	POST MILES TOTAL PROJECT	SHEET No.	TOTAL SHEETS
02	Sha	299	0.3/7.1	312	401

REGISTERED CIVIL ENGINEER 03-04-14 DATE

06-09-14
PLANS APPROVAL DATE

REGISTERED PROFESSIONAL ENGINEER SOCORRO V. URENA No. C79633 Exp. 9-30-14 CIVIL STATE OF CALIFORNIA

THE STATE OF CALIFORNIA OR ITS OFFICERS OR AGENTS SHALL NOT BE RESPONSIBLE FOR THE ACCURACY OR COMPLETENESS OF SCANNED COPIES OF THIS PLAN SHEET.

TEMPORARY RAILING (TYPE K)

STAGE	STATION	L†/R†	Temp RAILING (TYPE K)
			LF
2	"M8" 262+81.82 TO 266+32.72	R†	360
	TOTAL		360

CHANNELIZERS

STAGE	STATION	L†/R†	SURFACE MOUNTED
			EA
1	"M8" 110+25 TO 169+25	L†	120
	"M8" 169+25 TO 201+25	L†	66
2	"M8" 110+25 TO 201+25	L†	186
	"M8" 260+50 TO 268+50	R†	12
	TOTAL		384

PAVEMENT DELINEATION QUANTITIES

STAGE	STATION	L†/R†	THERMOPLASTIC TRAFFIC STRIPE (SPRAYABLE)				TEMPORARY TRAFFIC STRIPE (PAINT)				PAVEMENT MARKER (RETROFEFLECTIVE RECESSED	
			DETAIL 12	DETAIL 22	DETAIL 27B	DETAIL 29	DETAIL 11	DETAIL 21	DETAIL 27B	DETAIL 28	TYPE D	TYPE G
			LF	LF	LF	LF	LF	LF	LF	LF	EA	EA
1	"M8" 168+50 TO 202+00	L†			3402							
	"M8" 168+50 TO 198+82	L†	3062									65
	"M8" 168+50 TO 190+00	L†/R†				4300					182	
	"M8" 190+00 TO 190+50	R†		50							2	
	"M8" 190+50 TO 193+16	L†/R†				532					26	
	"M8" 193+15 TO 193+65	R†		50							2	
	"M8" 193+65 TO 202+00	L†/R†				1670					72	
2A	"M8" 17+50 TO 58+75	L†					4140		4151			
	"M8" 17+50 TO 58+75	L†/R†								8250		
	"M8" 17+50 TO 58+75	R†							4110			
2B	"M8" 58+75 TO 110+30	L†					5130		5105			
	"M8" 58+75 TO 110+30	L†/R†								10,310		
	"M8" 58+75 TO 110+30	R†							5178			
2C	"M8" 267+00 TO 301+25	L†							3433			
	"M8" 267+00 TO 301+25	L†/R†						3425				
	"M8" 267+00 TO 301+25	R†							3417			
2D	"M8" 216+65 TO 267+00	L†							5038			
	"M8" 216+65.53 TO 220+14.16	L†/R†								697		
	"M8" 220+14.16 TO 267+00.00	L†/R†						4686				
	"M8" 216+65 TO 267+00	R†							5030			
	SUBTOTAL		3062*	100*	3402*	6502*	9270	8111	35,462	19,257	284*	65*
	TOTAL		13,066*				72,100				349*	

* QUANTITY INCLUDED ON PDQ-1

STAGE CONSTRUCTION QUANTITIES

SCQ-1

REVISED BY | DATE REVISED
SOCORRO URENA | MICHAEL FEAKES
CALCULATED-DESIGNED BY | CHECKED BY
FUNCTIONAL SUPERVISOR | AL TRUJILLO
STATE OF CALIFORNIA - DEPARTMENT OF TRANSPORTATION
Caltrans® DESIGN

P:\proj\02\3E410_plans\pse\23e410mc001.dgn

LAST REVISION 03-04-14 | DATE PLOTTED => 25-AUG-2014 | TIME PLOTTED => 09:24

Dist	COUNTY	ROUTE	POST MILES TOTAL PROJECT	SHEET No.	TOTAL SHEETS
02	Sha	299	0.3/7.1	313	401

REGISTERED CIVIL ENGINEER 03-04-14 DATE

06-09-14
PLANS APPROVAL DATE

REGISTERED PROFESSIONAL ENGINEER MICHAEL E. FEAKES No. C70755 Exp. 6-30-15 CIVIL STATE OF CALIFORNIA

THE STATE OF CALIFORNIA OR ITS OFFICERS OR AGENTS SHALL NOT BE RESPONSIBLE FOR THE ACCURACY OR COMPLETENESS OF SCANNED COPIES OF THIS PLAN SHEET.

LEGEND

- Beg/END STRIPE
- STRIPE CHANGE LOCATION
- DELINEATOR (CLASS 2) TYPE E
- OBJECT MARKER (TYPE L-1)
- OBJECT MARKER (TYPE P)
- MARKER (CULVERT)
- MILEPOST MARKER
- REMOVE DELINEATOR
- REMOVE MARKER
- OBJECT MARKER (TYPE L)
- EXISTING SIGN TO REMAIN
- RECONSTRUCT TURNABLE ROADSIDE SIGN
- REMOVE ROADSIDE SIGN
- RELOCATE ROADSIDE SIGN
- ROADSIDE SIGN SINGLE POST
- ROADSIDE SIGN DOUBLE POST
- ROADSIDE SIGN (TURNABLE)
- TYPE VI ARROW
- X-X ROADSIDE SIGN DETAIL NUMBER
- X PAVEMENT DELINEATION DETAIL NUMBER
- XX SPEED TO BE DETERMINED BY ENGINEER

ABBREVIATION

S DELINEATOR SPACING

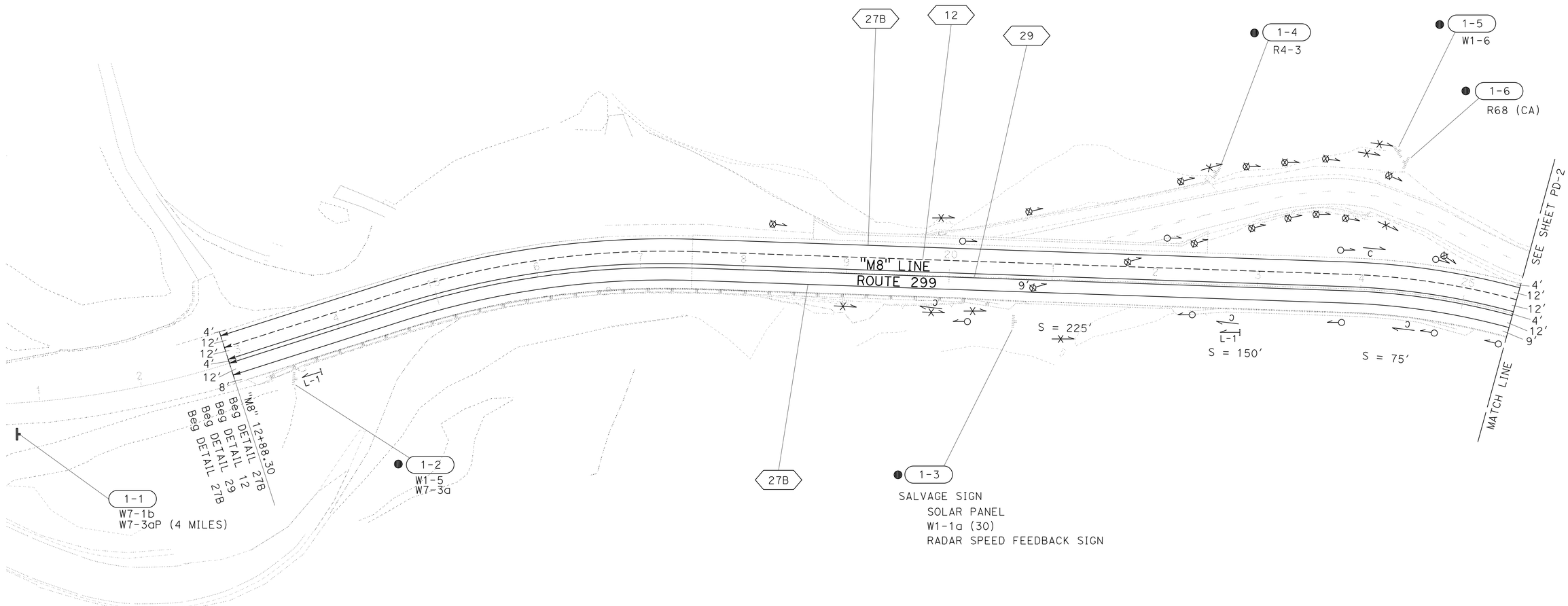

APPROVED FOR PAVEMENT DELINEATION AND SIGN WORK ONLY

PAVEMENT DELINEATION AND SIGN PLAN

SCALE: 1" = 50'

PD-1

REVISED BY	DATE REVISED

CALCULATED-DESIGNED BY: SOCORRO URENA
CHECKED BY: MICHAEL FEAKES
FUNCTIONAL SUPERVISOR: AL TRUJILLO

STATE OF CALIFORNIA - DEPARTMENT OF TRANSPORTATION
Caltrans
DESIGN

P:\proj\02\3E410_plans\pse\23e410na001.dgn

LAST REVISION 03-04-14 | DATE PLOTTED => 25-AUG-2014 | TIME PLOTTED => 09:24

BORDER LAST REVISED 7/2/2010 | USERNAME => s115152 | DGN FILE => 23e410na001.dgn | RELATIVE BORDER SCALE IS IN INCHES 0 1 2 3 | UNIT 0316 | PROJECT NUMBER & PHASE 02-0002-0042-1 | EA: 02-3E4101

Dist	COUNTY	ROUTE	POST MILES TOTAL PROJECT	SHEET No.	TOTAL SHEETS
02	Sha	299	0.3/7.1	314	401

REGISTERED CIVIL ENGINEER 03-04-14 DATE

06-09-14
PLANS APPROVAL DATE

REGISTERED PROFESSIONAL ENGINEER MICHAEL E. FEAKES No. C70755 Exp. 6-30-15 CIVIL STATE OF CALIFORNIA

THE STATE OF CALIFORNIA OR ITS OFFICERS OR AGENTS SHALL NOT BE RESPONSIBLE FOR THE ACCURACY OR COMPLETENESS OF SCANNED COPIES OF THIS PLAN SHEET.

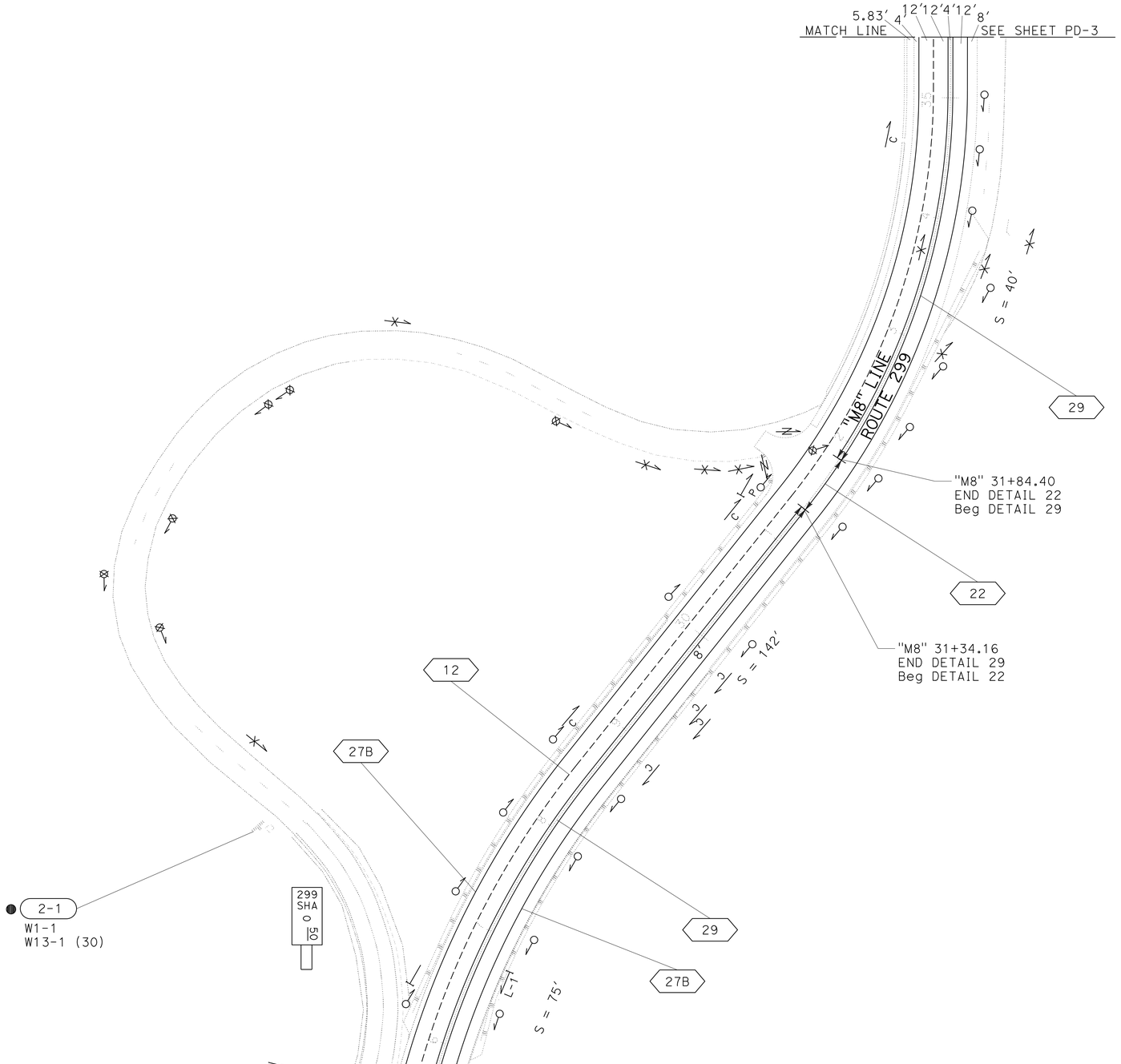

APPROVED FOR PAVEMENT DELINEATION AND SIGN WORK ONLY

PAVEMENT DELINEATION AND SIGN PLAN

SCALE: 1" = 50'

PD-2

STATE OF CALIFORNIA - DEPARTMENT OF TRANSPORTATION
Caltrans® DESIGN

FUNCTIONAL SUPERVISOR: AL TRUJILLO
CALCULATED-DESIGNED BY: SOCORRO URENA
CHECKED BY: MICHAEL FEAKES
REVISED BY
DATE REVISED

P:\proj1\02\3E410_plans\pse\23e410na002.dgn

LAST REVISION 03-04-14
DATE PLOTTED => 25-AUG-2014
TIME PLOTTED => 09:24

BORDER LAST REVISED 7/2/2010
USERNAME => s115152
DGN FILE => 23e410na002.dgn
RELATIVE BORDER SCALE IS IN INCHES 0 1 2 3
UNIT 0316
PROJECT NUMBER & PHASE 02-0002-0042-1
EA: 02-3E4101

Dist	COUNTY	ROUTE	POST MILES TOTAL PROJECT	SHEET No.	TOTAL SHEETS
02	Sha	299	0.3/7.1	315	401

REGISTERED CIVIL ENGINEER 03-04-14 DATE

06-09-14
PLANS APPROVAL DATE

REGISTERED PROFESSIONAL ENGINEER MICHAEL E. FEAKES No. C70755 Exp. 6-30-15 CIVIL STATE OF CALIFORNIA

THE STATE OF CALIFORNIA OR ITS OFFICERS OR AGENTS SHALL NOT BE RESPONSIBLE FOR THE ACCURACY OR COMPLETENESS OF SCANNED COPIES OF THIS PLAN SHEET.

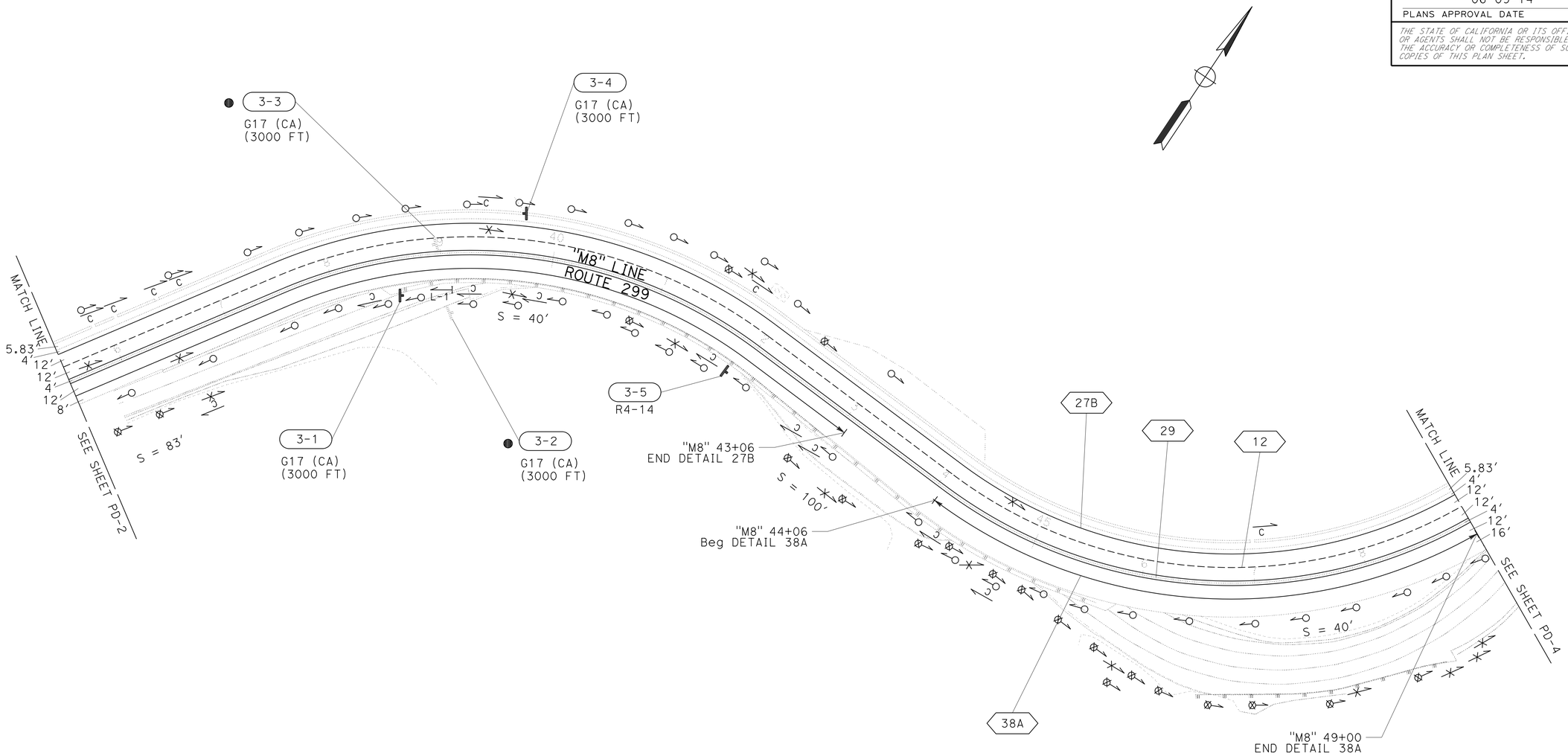

APPROVED FOR PAVEMENT DELINEATION AND SIGN WORK ONLY

PAVEMENT DELINEATION AND SIGN PLAN

SCALE: 1" = 50'

PD-3

REVISED BY | DATE REVISED
SOCORRO URENA | MICHAEL FEAKES
CALCULATED-DESIGNED BY | CHECKED BY
FUNCTIONAL SUPERVISOR
AL TRUJILLO

STATE OF CALIFORNIA - DEPARTMENT OF TRANSPORTATION
Caltrans
DESIGN

P:\proj\02\3E410_plans\pse\23e410na003.dgn

LAST REVISION 03-04-14 | DATE PLOTTED => 25-AUG-2014 | TIME PLOTTED => 09:24

BORDER LAST REVISED 7/2/2010 | USERNAME => s115152 | DGN FILE => 23e410na003.dgn | RELATIVE BORDER SCALE IS IN INCHES 0 1 2 3 | UNIT 0316 | PROJECT NUMBER & PHASE 02-0002-0042-1 | EA: 02-3E4101

Dist	COUNTY	ROUTE	POST MILES TOTAL PROJECT	SHEET No.	TOTAL SHEETS
02	Sha	299	0.3/7.1	316	401

REGISTERED CIVIL ENGINEER 03-04-14 DATE

06-09-14
PLANS APPROVAL DATE

REGISTERED PROFESSIONAL ENGINEER
MICHAEL E. FEAKES
No. C70755
Exp. 6-30-15
CIVIL
STATE OF CALIFORNIA

THE STATE OF CALIFORNIA OR ITS OFFICERS OR AGENTS SHALL NOT BE RESPONSIBLE FOR THE ACCURACY OR COMPLETENESS OF SCANNED COPIES OF THIS PLAN SHEET.

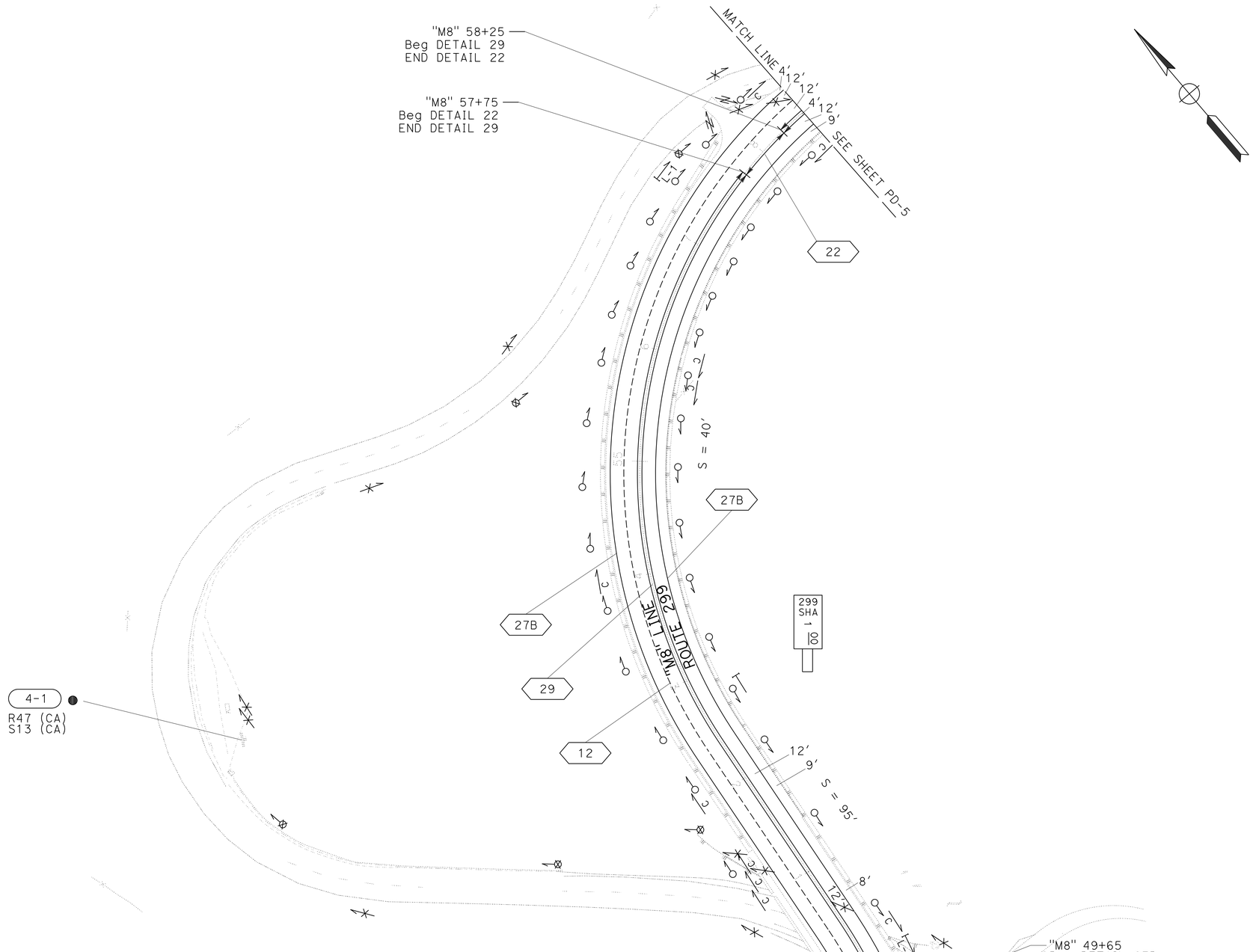

APPROVED FOR PAVEMENT DELINEATION AND SIGN WORK ONLY

PAVEMENT DELINEATION AND SIGN PLAN

SCALE: 1" = 50'

PD-4

REVISED BY	DATE REVISED

CALCULATED-DESIGNED BY	SOCORRO URENA
CHECKED BY	MICHAEL FEAKES

FUNCTIONAL SUPERVISOR: AL TRUJILLO

STATE OF CALIFORNIA - DEPARTMENT OF TRANSPORTATION

Caltrans® **DESIGN**

P:\proj\02\3E410_plans\pse\23e410na004.dgn

LAST REVISION 03-04-14 | DATE PLOTTED => 25-AUG-2014 | TIME PLOTTED => 09:24

Dist	COUNTY	ROUTE	POST MILES TOTAL PROJECT	SHEET No.	TOTAL SHEETS
02	Sha	299	0.3/7.1	317	401

REGISTERED CIVIL ENGINEER 03-04-14 DATE

06-09-14
PLANS APPROVAL DATE

REGISTERED PROFESSIONAL ENGINEER
MICHAEL E. FEAKES
No. C70755
Exp. 6-30-15
CIVIL
STATE OF CALIFORNIA

THE STATE OF CALIFORNIA OR ITS OFFICERS OR AGENTS SHALL NOT BE RESPONSIBLE FOR THE ACCURACY OR COMPLETENESS OF SCANNED COPIES OF THIS PLAN SHEET.

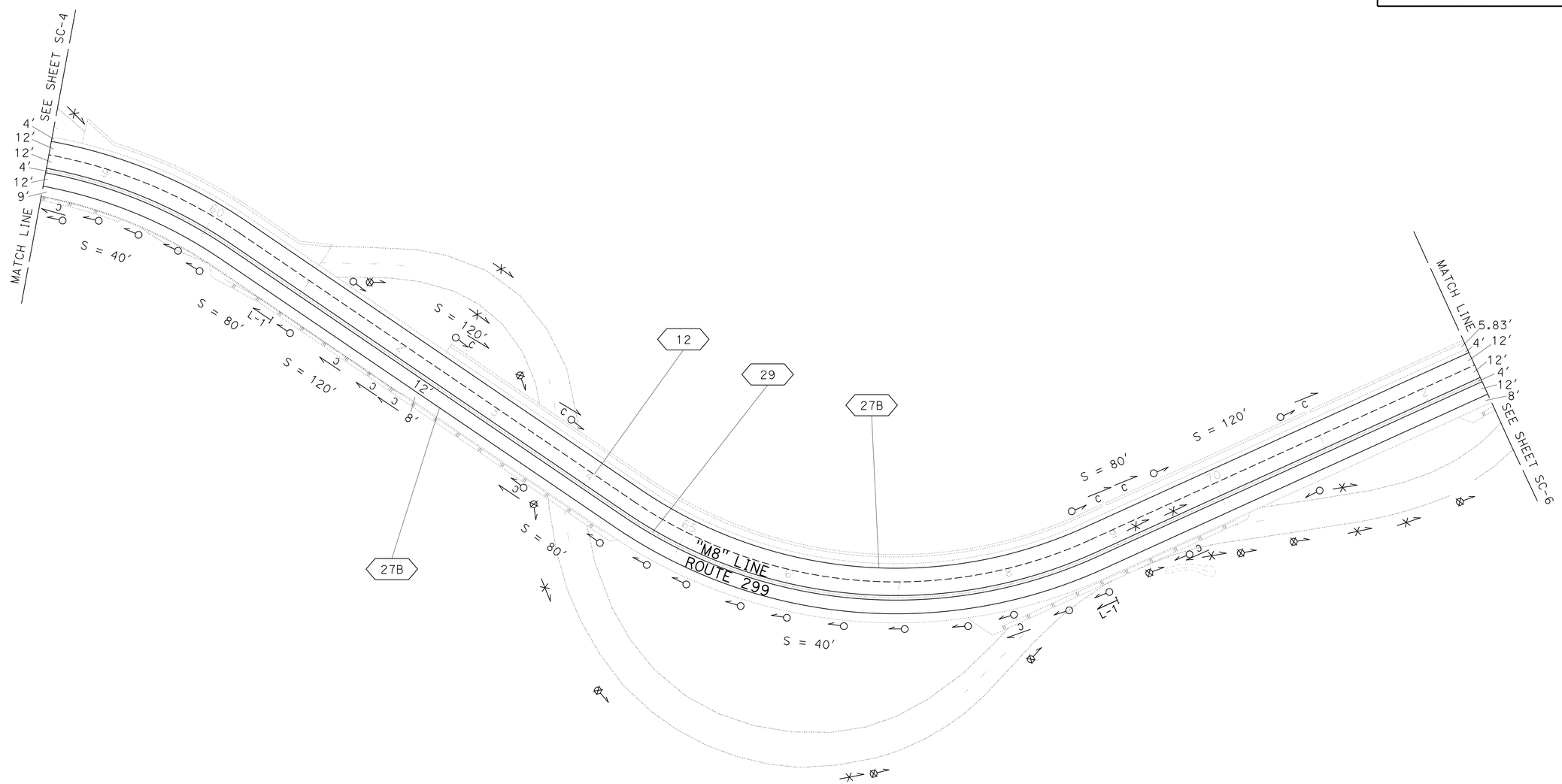

APPROVED FOR PAVEMENT DELINEATION AND SIGN WORK ONLY

PAVEMENT DELINEATION AND SIGN PLAN

SCALE: 1" = 50'

PD-5

REVISED BY	DATE REVISED

CALCULATED-DESIGNED BY	SOCORRO URENA
CHECKED BY	MICHAEL FEAKES
FUNCTIONAL SUPERVISOR	AL TRUJILLO

STATE OF CALIFORNIA - DEPARTMENT OF TRANSPORTATION
Caltrans
DESIGN

P:\proj1\02\3E410_plans\pse\23e410na005.dgn

LAST REVISION 03-04-14 | DATE PLOTTED => 25-AUG-2014 | TIME PLOTTED => 09:24

Dist	COUNTY	ROUTE	POST MILES TOTAL PROJECT	SHEET No.	TOTAL SHEETS
02	Sha	299	0.3/7.1	318	401

REGISTERED CIVIL ENGINEER 03-04-14 DATE

06-09-14
PLANS APPROVAL DATE

REGISTERED PROFESSIONAL ENGINEER MICHAEL E. FEAKES No. C70755 Exp. 6-30-15 CIVIL STATE OF CALIFORNIA

THE STATE OF CALIFORNIA OR ITS OFFICERS OR AGENTS SHALL NOT BE RESPONSIBLE FOR THE ACCURACY OR COMPLETENESS OF SCANNED COPIES OF THIS PLAN SHEET.

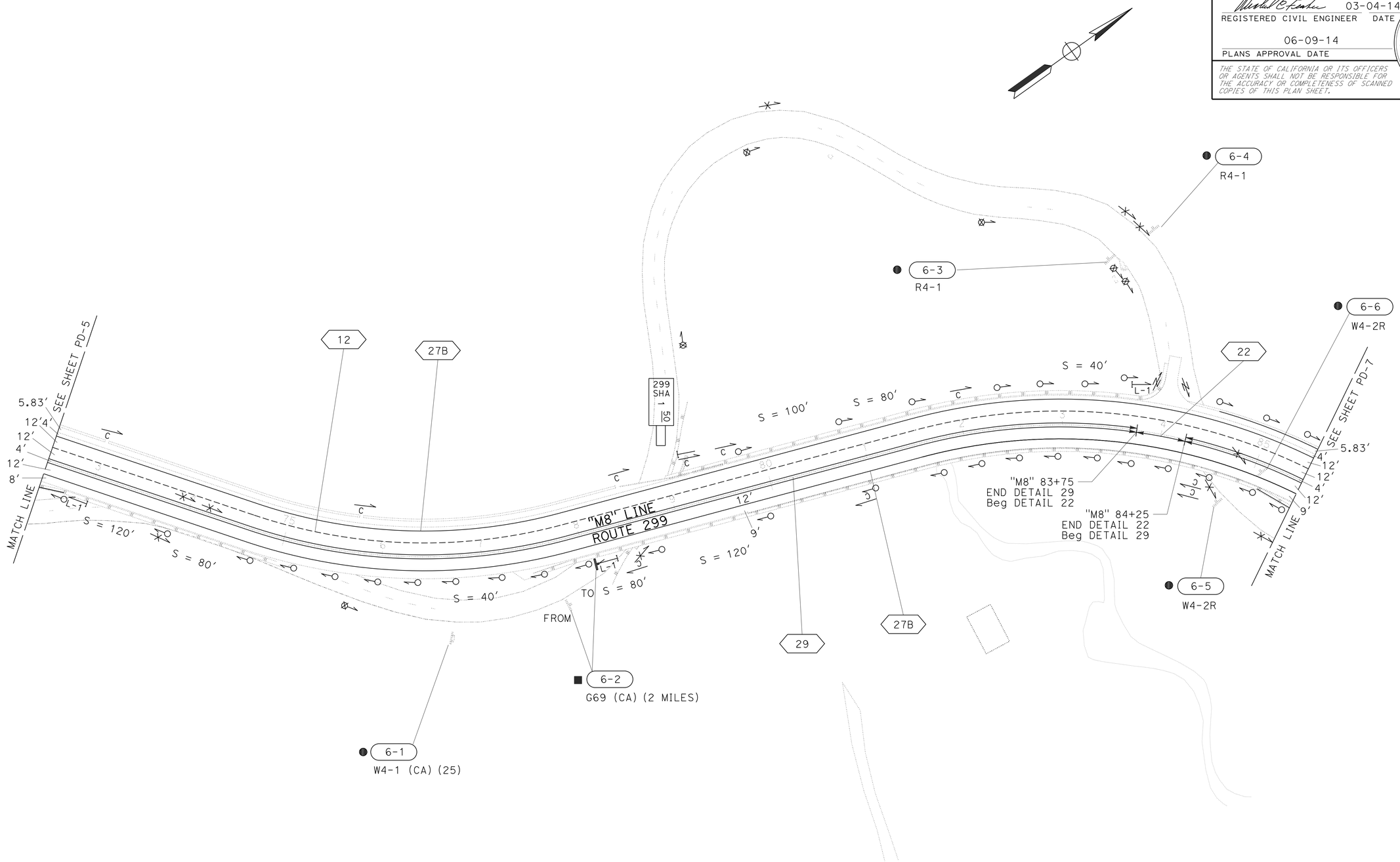

APPROVED FOR PAVEMENT DELINEATION AND SIGN WORK ONLY

PAVEMENT DELINEATION AND SIGN PLAN

SCALE: 1" = 50′

PD-6

REVISED BY	DATE REVISED

CALCULATED-DESIGNED BY
CHECKED BY

SOCORRO URENA
MICHAEL FEAKES

FUNCTIONAL SUPERVISOR
AL TRUJILLO

STATE OF CALIFORNIA - DEPARTMENT OF TRANSPORTATION
Caltrans®
DESIGN

P:\proj1\02\3E410_plans\pse\23e410na006.dgn

LAST REVISION 03-04-14 | DATE PLOTTED => 25-AUG-2014 TIME PLOTTED => 09:24

Dist	COUNTY	ROUTE	POST MILES TOTAL PROJECT	SHEET No.	TOTAL SHEETS
02	Sha	299	0.3/7.1	319	401

REGISTERED CIVIL ENGINEER 03-04-14 DATE

06-09-14
PLANS APPROVAL DATE

REGISTERED PROFESSIONAL ENGINEER MICHAEL E. FEAKES No. C70755 Exp. 6-30-15 CIVIL STATE OF CALIFORNIA

THE STATE OF CALIFORNIA OR ITS OFFICERS OR AGENTS SHALL NOT BE RESPONSIBLE FOR THE ACCURACY OR COMPLETENESS OF SCANNED COPIES OF THIS PLAN SHEET.

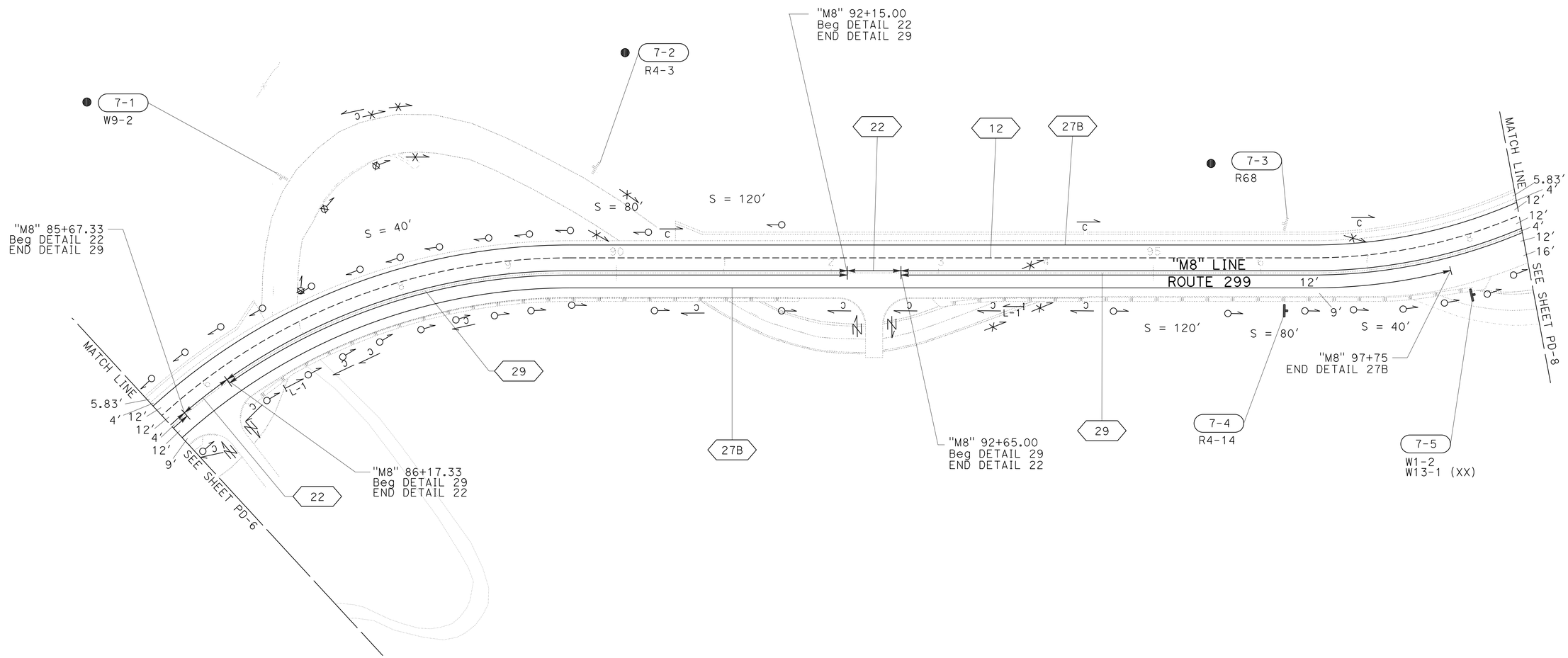

APPROVED FOR PAVEMENT DELINEATION AND SIGN WORK ONLY

PAVEMENT DELINEATION AND SIGN PLAN

SCALE: 1" = 50'

PD-7

REVISED BY	DATE REVISED

CALCULATED-DESIGNED BY: SOCORRO URENA
CHECKED BY: MICHAEL FEAKES
FUNCTIONAL SUPERVISOR: AL TRUJILLO

STATE OF CALIFORNIA - DEPARTMENT OF TRANSPORTATION
Caltrans
DESIGN

P:\proj1\02\3E410_plans\pse\23e410na007.dgn

LAST REVISION 03-04-14 | DATE PLOTTED => 25-AUG-2014 | TIME PLOTTED => 09:24

Dist	COUNTY	ROUTE	POST MILES TOTAL PROJECT	SHEET No.	TOTAL SHEETS
02	Sha	299	0.3/7.1	320	401

REGISTERED CIVIL ENGINEER 03-04-14 DATE

06-09-14
PLANS APPROVAL DATE

REGISTERED PROFESSIONAL ENGINEER MICHAEL E. FEAKES No. C70755 Exp. 6-30-15 CIVIL STATE OF CALIFORNIA

THE STATE OF CALIFORNIA OR ITS OFFICERS OR AGENTS SHALL NOT BE RESPONSIBLE FOR THE ACCURACY OR COMPLETENESS OF SCANNED COPIES OF THIS PLAN SHEET.

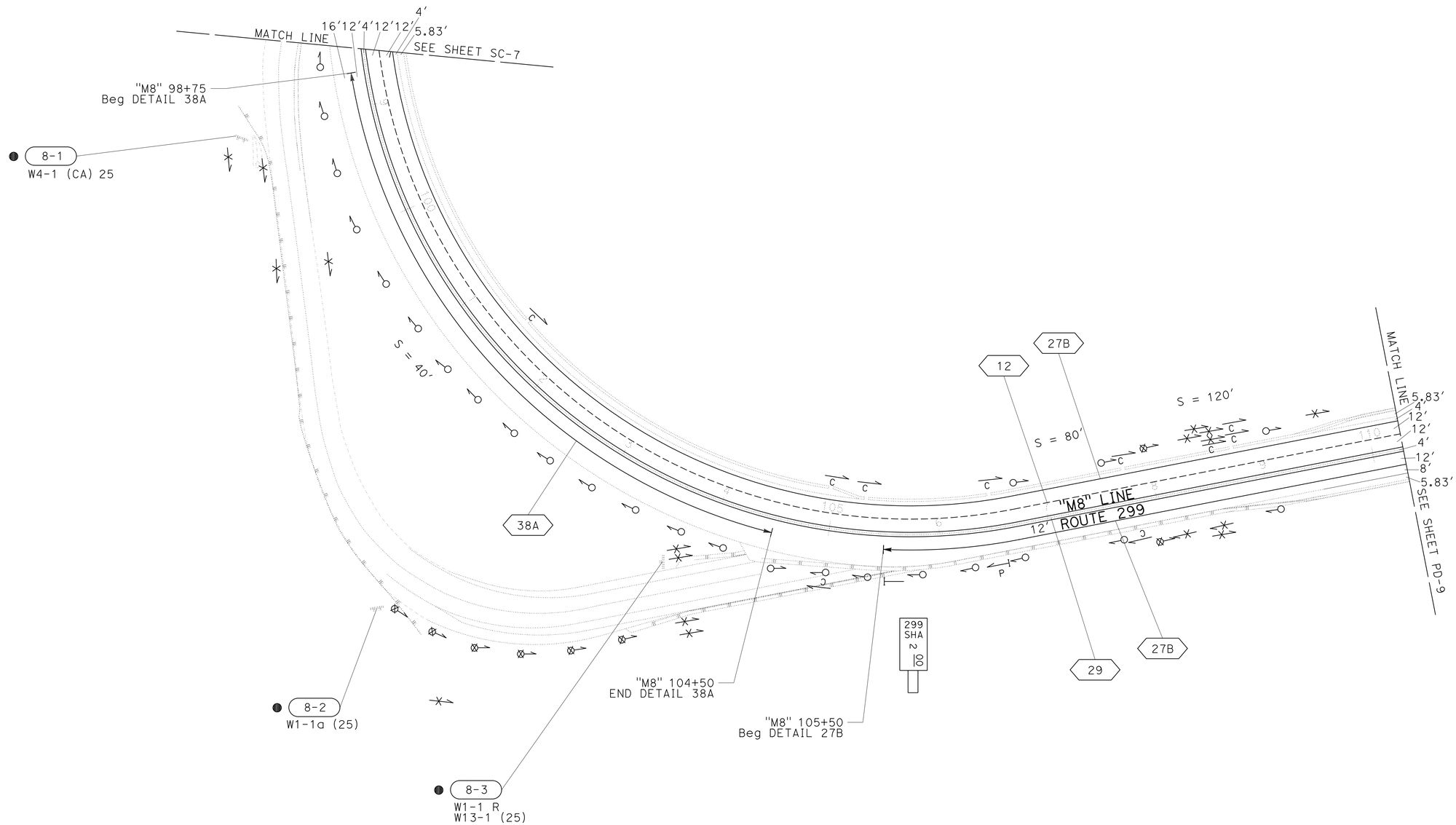

APPROVED FOR PAVEMENT DELINEATION AND SIGN WORK ONLY

PAVEMENT DELINEATION AND SIGN PLAN

SCALE: 1" = 50'

PD-8

REVISED BY	DATE REVISED

CALCULATED-DESIGNED BY	CHECKED BY
SOCORRO URENA	MICHAEL FEAKES

FUNCTIONAL SUPERVISOR: AL TRUJILLO

STATE OF CALIFORNIA - DEPARTMENT OF TRANSPORTATION

Caltrans® **DESIGN**

P:\proj1\02\3E410_plans\pse\23e410na008.dgn

LAST REVISION 03-04-14 | DATE PLOTTED => 25-AUG-2014 | TIME PLOTTED => 09:25

Dist	COUNTY	ROUTE	POST MILES TOTAL PROJECT	SHEET No.	TOTAL SHEETS
02	Sha	299	0.3/7.1	321	401

REGISTERED CIVIL ENGINEER 03-04-14 DATE

06-09-14
PLANS APPROVAL DATE

REGISTERED PROFESSIONAL ENGINEER
MICHAEL E. FEAKES
No. C70755
Exp. 6-30-15
CIVIL
STATE OF CALIFORNIA

THE STATE OF CALIFORNIA OR ITS OFFICERS OR AGENTS SHALL NOT BE RESPONSIBLE FOR THE ACCURACY OR COMPLETENESS OF SCANNED COPIES OF THIS PLAN SHEET.

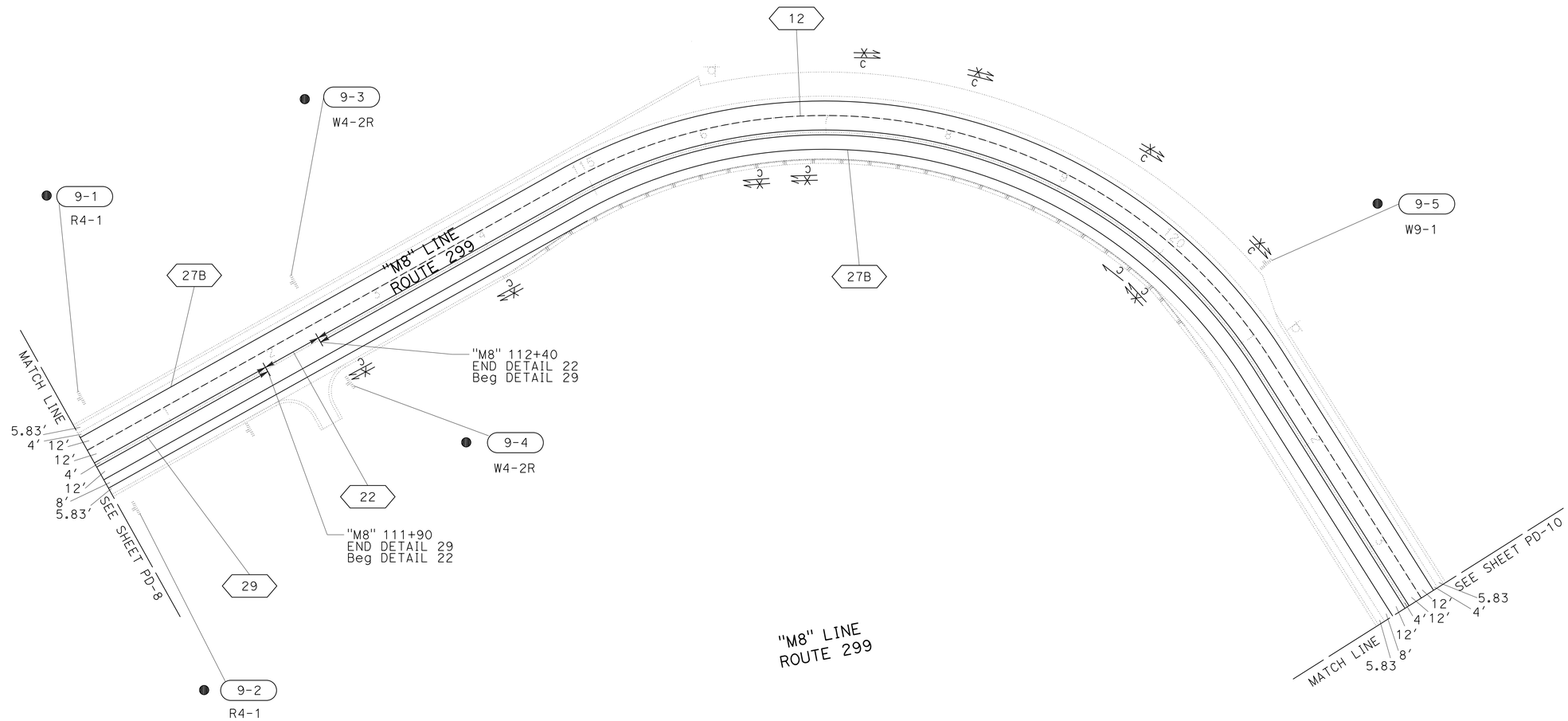

APPROVED FOR PAVEMENT DELINEATION AND SIGN WORK ONLY

PAVEMENT DELINEATION AND SIGN PLAN

SCALE: 1" = 50'

PD-9

REVISED BY	DATE REVISED

CALCULATED-DESIGNED BY: SOCORRO URENA
CHECKED BY: MICHAEL FEAKES
FUNCTIONAL SUPERVISOR: AL TRUJILLO

STATE OF CALIFORNIA - DEPARTMENT OF TRANSPORTATION
Caltrans
DESIGN

P:\proj1\02\3E410_plans\pse\23e410na009.dgn

LAST REVISION 03-04-14
DATE PLOTTED => 25-AUG-2014
TIME PLOTTED => 09:25

Dist	COUNTY	ROUTE	POST MILES TOTAL PROJECT	SHEET No.	TOTAL SHEETS
02	Sha	299	0.3/7.1	322	401

REGISTERED CIVIL ENGINEER 03-04-14 DATE

06-09-14
PLANS APPROVAL DATE

REGISTERED PROFESSIONAL ENGINEER
MICHAEL E. FEAKES
No. C70755
Exp. 6-30-15
CIVIL
STATE OF CALIFORNIA

THE STATE OF CALIFORNIA OR ITS OFFICERS OR AGENTS SHALL NOT BE RESPONSIBLE FOR THE ACCURACY OR COMPLETENESS OF SCANNED COPIES OF THIS PLAN SHEET.

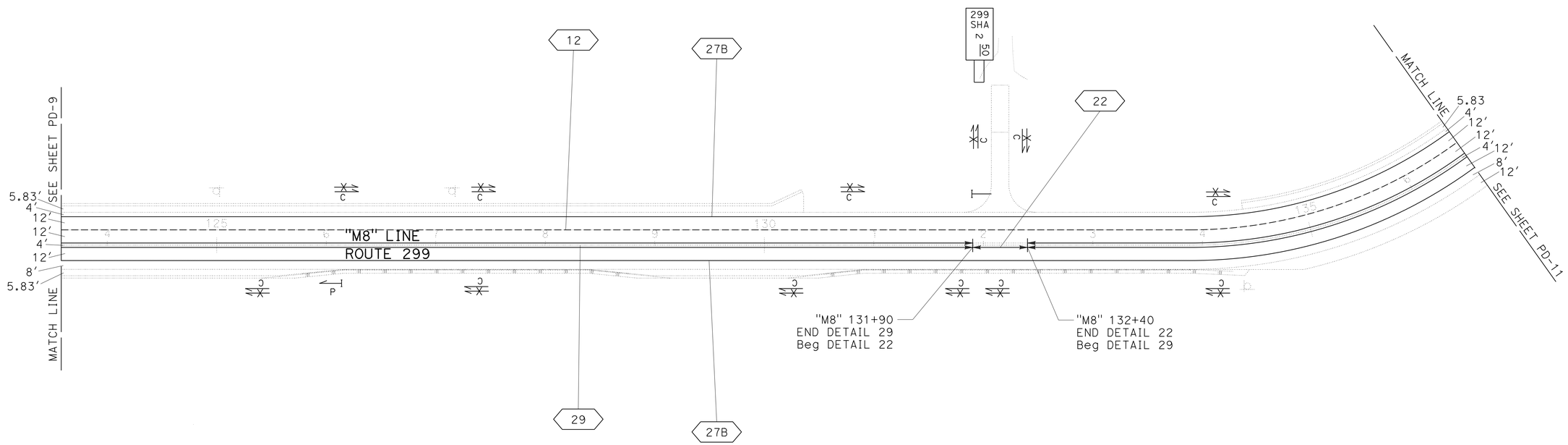

PAVEMENT DELINEATION AND SIGN PLAN

SCALE: 1" = 50′

PD-10

APPROVED FOR PAVEMENT DELINEATION AND SIGN WORK ONLY

REVISED BY	DATE REVISED

CALCULATED-DESIGNED BY: SOCORRO URENA
CHECKED BY: MICHAEL FEAKES

FUNCTIONAL SUPERVISOR: AL TRUJILLO

STATE OF CALIFORNIA - DEPARTMENT OF TRANSPORTATION
Caltrans
DESIGN

P:\proj1\02\3E410_plans\pse\23e410na010.dgn

LAST REVISION 03-04-14 | DATE PLOTTED => 25-AUG-2014 | TIME PLOTTED => 09:25

Dist	COUNTY	ROUTE	POST MILES TOTAL PROJECT	SHEET No.	TOTAL SHEETS
02	Sha	299	0.3/7.1	323	401

REGISTERED CIVIL ENGINEER 03-04-14 DATE

06-09-14
PLANS APPROVAL DATE

REGISTERED PROFESSIONAL ENGINEER
MICHAEL E. FEAKES
No. C70755
Exp. 6-30-15
CIVIL
STATE OF CALIFORNIA

THE STATE OF CALIFORNIA OR ITS OFFICERS OR AGENTS SHALL NOT BE RESPONSIBLE FOR THE ACCURACY OR COMPLETENESS OF SCANNED COPIES OF THIS PLAN SHEET.

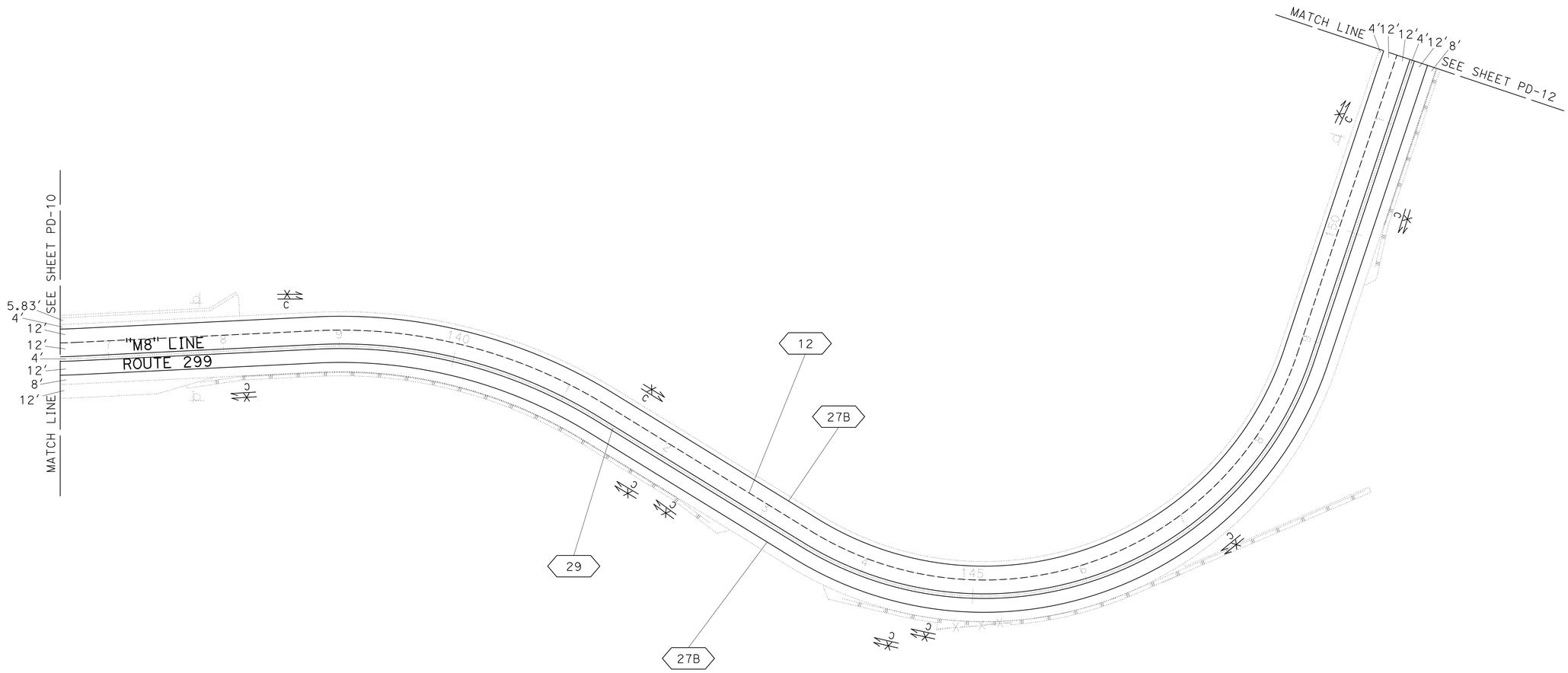

APPROVED FOR PAVEMENT DELINEATION AND SIGN WORK ONLY

PAVEMENT DELINEATION AND SIGN PLAN

SCALE: 1" = 50'

PD-11

CALCULATED-DESIGNED BY	SOCORRO URENA
CHECKED BY	MICHAEL FEAKES
FUNCTIONAL SUPERVISOR	AL TRUJILLO
REVISED BY	
DATE REVISED	

STATE OF CALIFORNIA - DEPARTMENT OF TRANSPORTATION
Caltrans
DESIGN

P:\proj\02\3E410_plans\pse\23e410na011.dgn

LAST REVISION 03-04-14 | DATE PLOTTED => 25-AUG-2014 | TIME PLOTTED => 09:25

Dist	COUNTY	ROUTE	POST MILES TOTAL PROJECT	SHEET No.	TOTAL SHEETS
02	Sha	299	0.3/7.1	324	401

REGISTERED CIVIL ENGINEER 03-04-14 DATE

06-09-14
PLANS APPROVAL DATE

REGISTERED PROFESSIONAL ENGINEER
MICHAEL E. FEAKES
No. C70755
Exp. 6-30-15
CIVIL
STATE OF CALIFORNIA

THE STATE OF CALIFORNIA OR ITS OFFICERS OR AGENTS SHALL NOT BE RESPONSIBLE FOR THE ACCURACY OR COMPLETENESS OF SCANNED COPIES OF THIS PLAN SHEET.

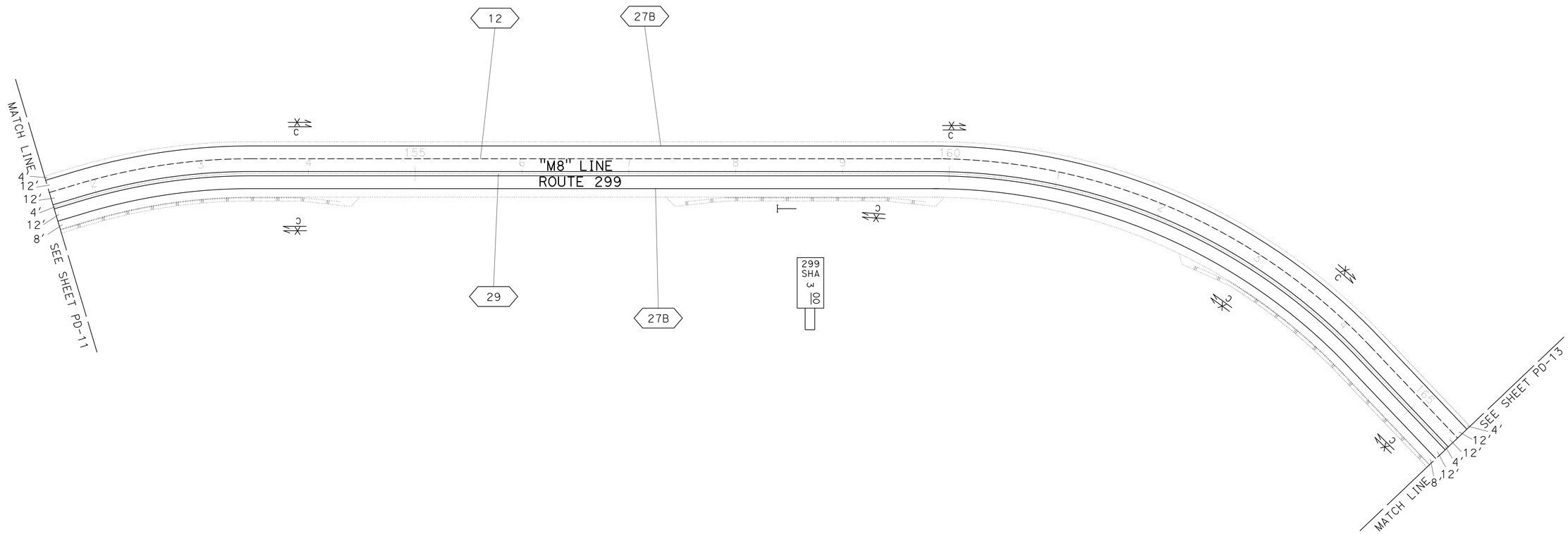

APPROVED FOR PAVEMENT DELINEATION AND SIGN WORK ONLY

PAVEMENT DELINEATION AND SIGN PLAN

SCALE: 1" = 50'

PD-12

REVISED BY	DATE REVISED

CALCULATED-DESIGNED BY: SOCORRO URENA
CHECKED BY: MICHAEL FEAKES
FUNCTIONAL SUPERVISOR: AL TRUJILLO

STATE OF CALIFORNIA - DEPARTMENT OF TRANSPORTATION
Caltrans
DESIGN

P:\proj1\02\3E410_plans\pse\23e410na012.dgn

LAST REVISION 03-04-14 | DATE PLOTTED => 25-AUG-2014 | TIME PLOTTED => 09:25

Dist	COUNTY	ROUTE	POST MILES TOTAL PROJECT	SHEET No.	TOTAL SHEETS
02	Sha	299	0.3/7.1	325	401

REGISTERED CIVIL ENGINEER 03-04-14 DATE

06-09-14
PLANS APPROVAL DATE

REGISTERED PROFESSIONAL ENGINEER
MICHAEL E. FEAKES
No. C70755
Exp. 6-30-15
CIVIL
STATE OF CALIFORNIA

THE STATE OF CALIFORNIA OR ITS OFFICERS OR AGENTS SHALL NOT BE RESPONSIBLE FOR THE ACCURACY OR COMPLETENESS OF SCANNED COPIES OF THIS PLAN SHEET.

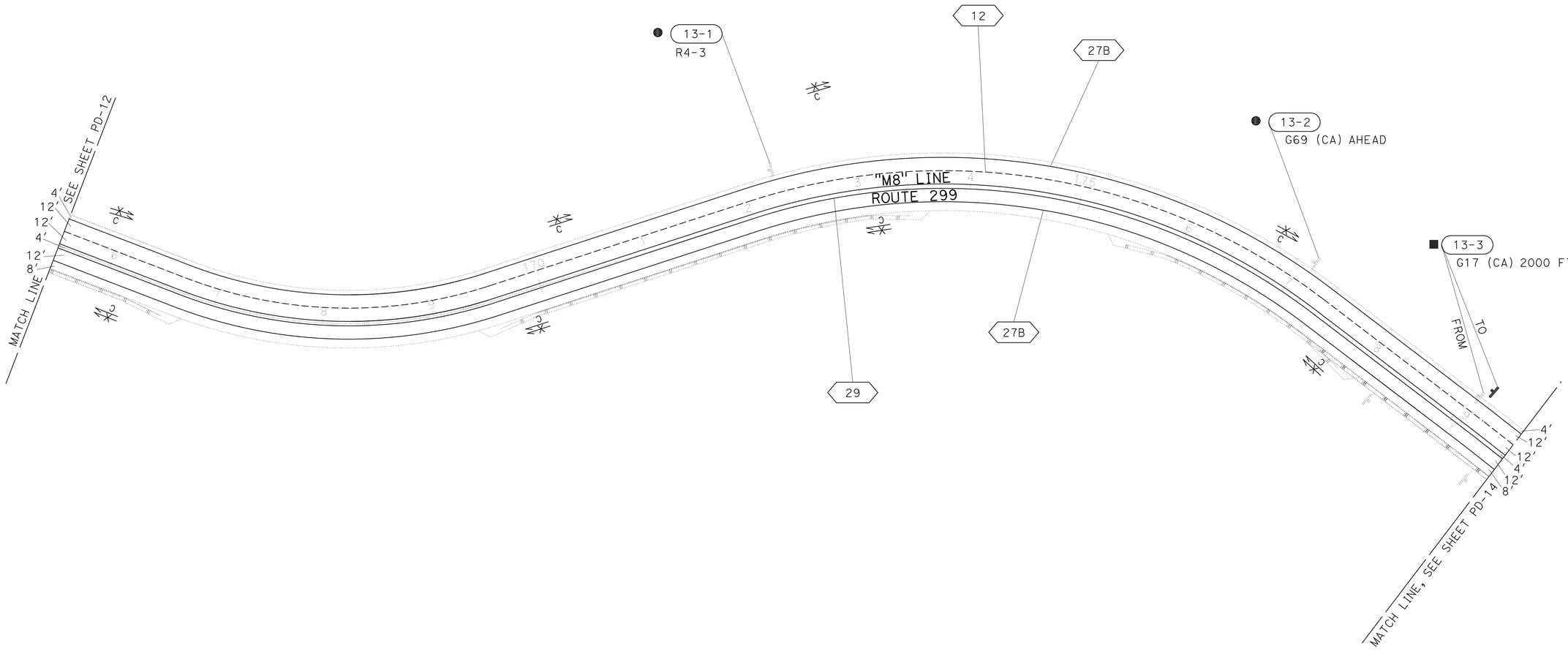

APPROVED FOR PAVEMENT DELINEATION AND SIGN WORK ONLY

PAVEMENT DELINEATION AND SIGN PLAN

SCALE: 1" = 50'

PD-13

REVISED BY	DATE REVISED

CALCULATED-DESIGNED BY: SOCORRO URENA
CHECKED BY: MICHAEL FEAKES

FUNCTIONAL SUPERVISOR: AL TRUJILLO

STATE OF CALIFORNIA - DEPARTMENT OF TRANSPORTATION
Caltrans
DESIGN

P:\proj\02\3E410_plans\pse\23e410na013.dgn

LAST REVISION 03-04-14 | DATE PLOTTED => 25-AUG-2014 | TIME PLOTTED => 09:25

Dist	COUNTY	ROUTE	POST MILES TOTAL PROJECT	SHEET No.	TOTAL SHEETS
02	Sha	299	0.3/7.1	326	401

REGISTERED CIVIL ENGINEER 03-04-14 DATE

06-09-14
PLANS APPROVAL DATE

REGISTERED PROFESSIONAL ENGINEER
MICHAEL E. FEAKES
No. C70755
Exp. 6-30-15
CIVIL
STATE OF CALIFORNIA

THE STATE OF CALIFORNIA OR ITS OFFICERS OR AGENTS SHALL NOT BE RESPONSIBLE FOR THE ACCURACY OR COMPLETENESS OF SCANNED COPIES OF THIS PLAN SHEET.

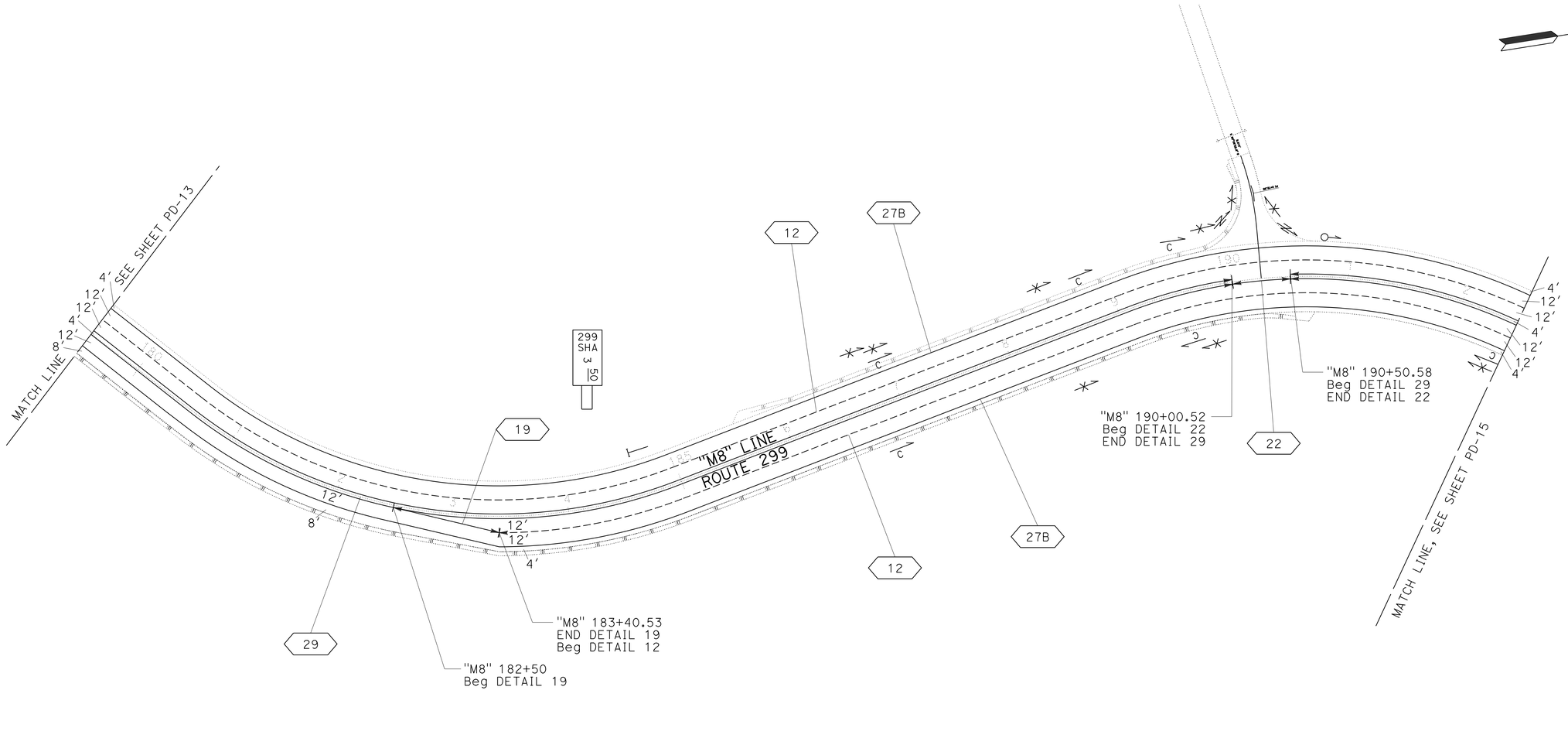

APPROVED FOR PAVEMENT DELINEATION AND SIGN WORK ONLY

PAVEMENT DELINEATION AND SIGN PLAN

SCALE: 1" = 50'

PD-14

REVISED BY	DATE REVISED

CALCULATED-DESIGNED BY: SOCORRO URENA
CHECKED BY: MICHAEL FEAKES

FUNCTIONAL SUPERVISOR: AL TRUJILLO

STATE OF CALIFORNIA - DEPARTMENT OF TRANSPORTATION
Caltrans
DESIGN

P:\proj\02\3E410_plans\pse\23e410na014.dgn

LAST REVISION 03-04-14
DATE PLOTTED => 25-AUG-2014
TIME PLOTTED => 09:25

Dist	COUNTY	ROUTE	POST MILES TOTAL PROJECT	SHEET No.	TOTAL SHEETS
02	Sha	299	0.3/7.1	327	401

REGISTERED CIVIL ENGINEER DATE 03-04-14

PLANS APPROVAL DATE 06-09-14

REGISTERED PROFESSIONAL ENGINEER MICHAEL E. FEAKES No. C70755 Exp. 6-30-15 CIVIL STATE OF CALIFORNIA

THE STATE OF CALIFORNIA OR ITS OFFICERS OR AGENTS SHALL NOT BE RESPONSIBLE FOR THE ACCURACY OR COMPLETENESS OF SCANNED COPIES OF THIS PLAN SHEET.

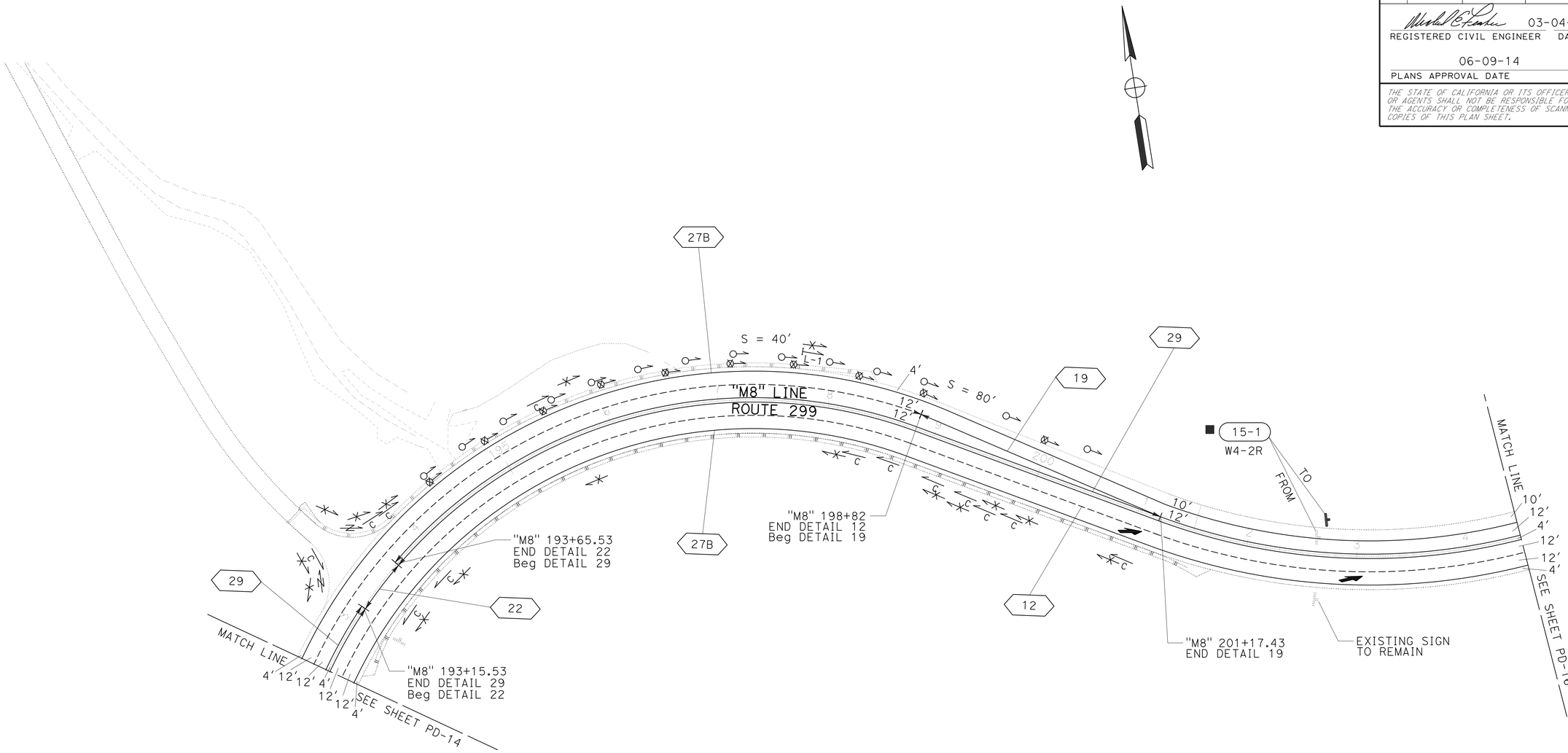

APPROVED FOR PAVEMENT DELINEATION AND SIGN WORK ONLY

PAVEMENT DELINEATION AND SIGN PLAN

SCALE: 1" = 50′

PD-15

REVISED BY | DATE REVISED

SOCORRO URENA | MICHAEL FEAKES

CALCULATED-DESIGNED BY | CHECKED BY

FUNCTIONAL SUPERVISOR: AL TRUJILLO

STATE OF CALIFORNIA - DEPARTMENT OF TRANSPORTATION

Caltrans DESIGN

P:\proj1\02\3E410_plans\pse\23e410na015.dgn

LAST REVISION | DATE PLOTTED => 25-AUG-2014 | TIME PLOTTED => 09:25

03-04-14

Dist	COUNTY	ROUTE	POST MILES TOTAL PROJECT	SHEET No.	TOTAL SHEETS
02	Sha	299	0.3/7.1	328	401

REGISTERED CIVIL ENGINEER 03-04-14 DATE

06-09-14
PLANS APPROVAL DATE

REGISTERED PROFESSIONAL ENGINEER
MICHAEL E. FEAKES
No. C70755
Exp. 6-30-15
CIVIL
STATE OF CALIFORNIA

THE STATE OF CALIFORNIA OR ITS OFFICERS OR AGENTS SHALL NOT BE RESPONSIBLE FOR THE ACCURACY OR COMPLETENESS OF SCANNED COPIES OF THIS PLAN SHEET.

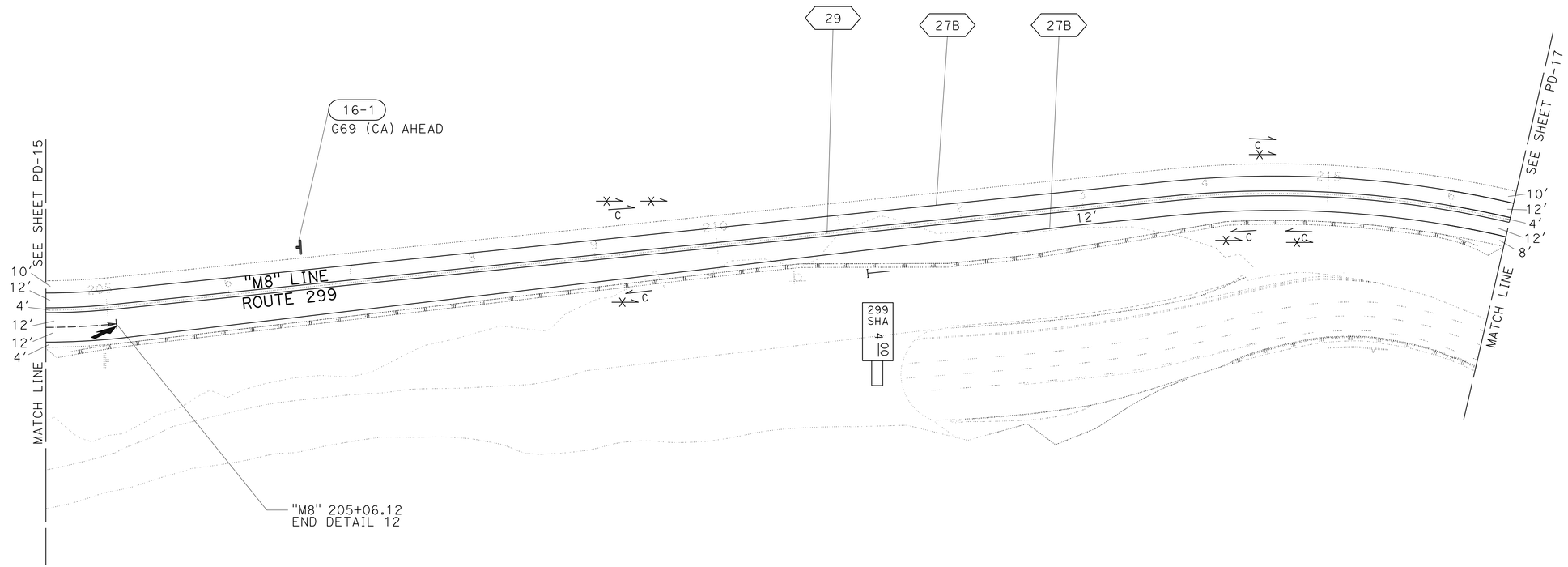

APPROVED FOR PAVEMENT DELINEATION AND SIGN WORK ONLY

PAVEMENT DELINEATION AND SIGN PLAN

SCALE: 1" = 50′

PD-16

STATE OF CALIFORNIA - DEPARTMENT OF TRANSPORTATION
Caltrans
DESIGN

FUNCTIONAL SUPERVISOR: AL TRUJILLO
CALCULATED-DESIGNED BY: SOCORRO URENA
CHECKED BY: MICHAEL FEAKES
REVISED BY
DATE REVISED

P:\proj1\02\3E410_plans\pse\23e410na016.dgn

LAST REVISION 03-04-14 | DATE PLOTTED => 25-AUG-2014 | TIME PLOTTED => 09:25

BORDER LAST REVISED 7/2/2010 | USERNAME => s115152 | DGN FILE => 23e410na016.dgn | RELATIVE BORDER SCALE IS IN INCHES 0 1 2 3 | UNIT 0316 | PROJECT NUMBER & PHASE 02-0002-0042-1 | EA: 02-3E4101

Dist	COUNTY	ROUTE	POST MILES TOTAL PROJECT	SHEET No.	TOTAL SHEETS
02	Sha	299	0.3/7.1	329	401

REGISTERED CIVIL ENGINEER 03-04-14 DATE

06-09-14
PLANS APPROVAL DATE

REGISTERED PROFESSIONAL ENGINEER MICHAEL E. FEAKES No. C70755 Exp. 6-30-15 CIVIL STATE OF CALIFORNIA

THE STATE OF CALIFORNIA OR ITS OFFICERS OR AGENTS SHALL NOT BE RESPONSIBLE FOR THE ACCURACY OR COMPLETENESS OF SCANNED COPIES OF THIS PLAN SHEET.

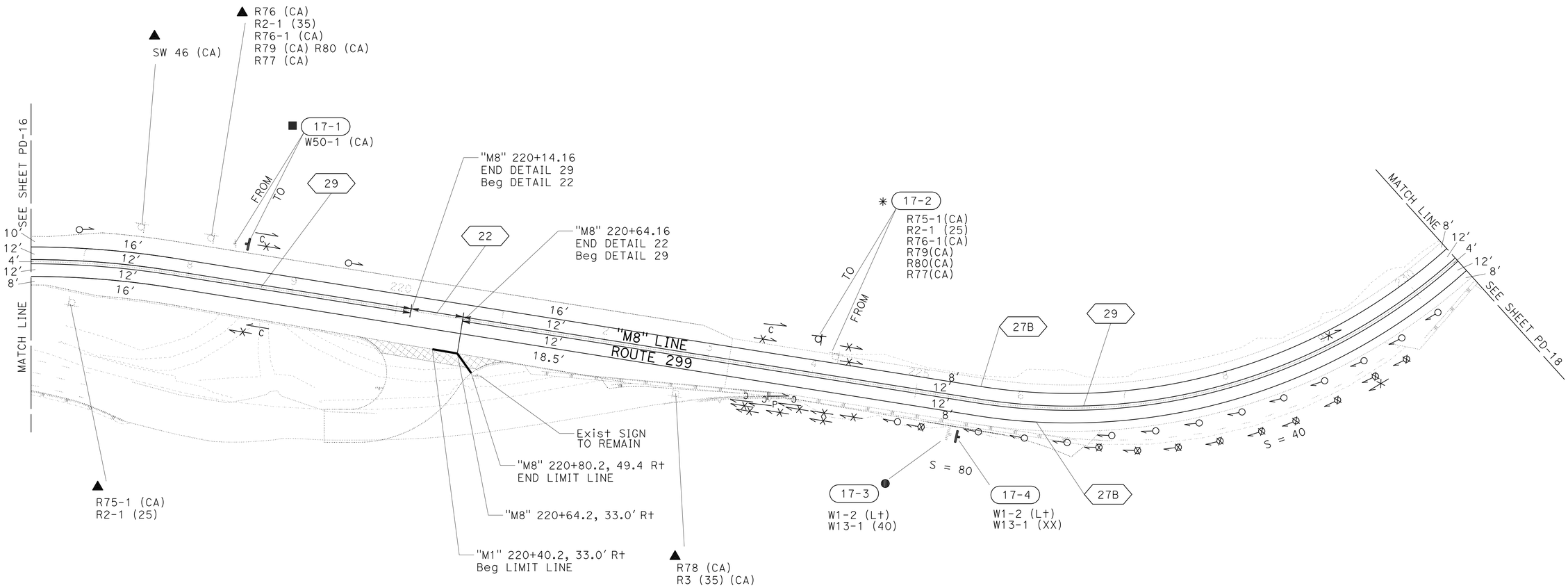

APPROVED FOR PAVEMENT DELINEATION AND SIGN WORK ONLY

PAVEMENT DELINEATION AND SIGN PLAN

SCALE: 1" = 50'

PD-17

REVISED BY	DATE REVISED

CALCULATED-DESIGNED BY: SOCORRO URENA
CHECKED BY: MICHAEL FEAKES
FUNCTIONAL SUPERVISOR: AL TRUJILLO

STATE OF CALIFORNIA - DEPARTMENT OF TRANSPORTATION
Caltrans
DESIGN

P:\proj1\02\3E410_plans\pse\23e410na017.dgn

LAST REVISION 03-04-14 | DATE PLOTTED => 25-AUG-2014 | TIME PLOTTED => 09:25

Dist	COUNTY	ROUTE	POST MILES TOTAL PROJECT	SHEET No.	TOTAL SHEETS
02	Sha	299	0.3/7.1	330	401

REGISTERED CIVIL ENGINEER 03-04-14 DATE

06-09-14
PLANS APPROVAL DATE

REGISTERED PROFESSIONAL ENGINEER
MICHAEL E. FEAKES
No. C70755
Exp. 6-30-15
CIVIL
STATE OF CALIFORNIA

THE STATE OF CALIFORNIA OR ITS OFFICERS OR AGENTS SHALL NOT BE RESPONSIBLE FOR THE ACCURACY OR COMPLETENESS OF SCANNED COPIES OF THIS PLAN SHEET.

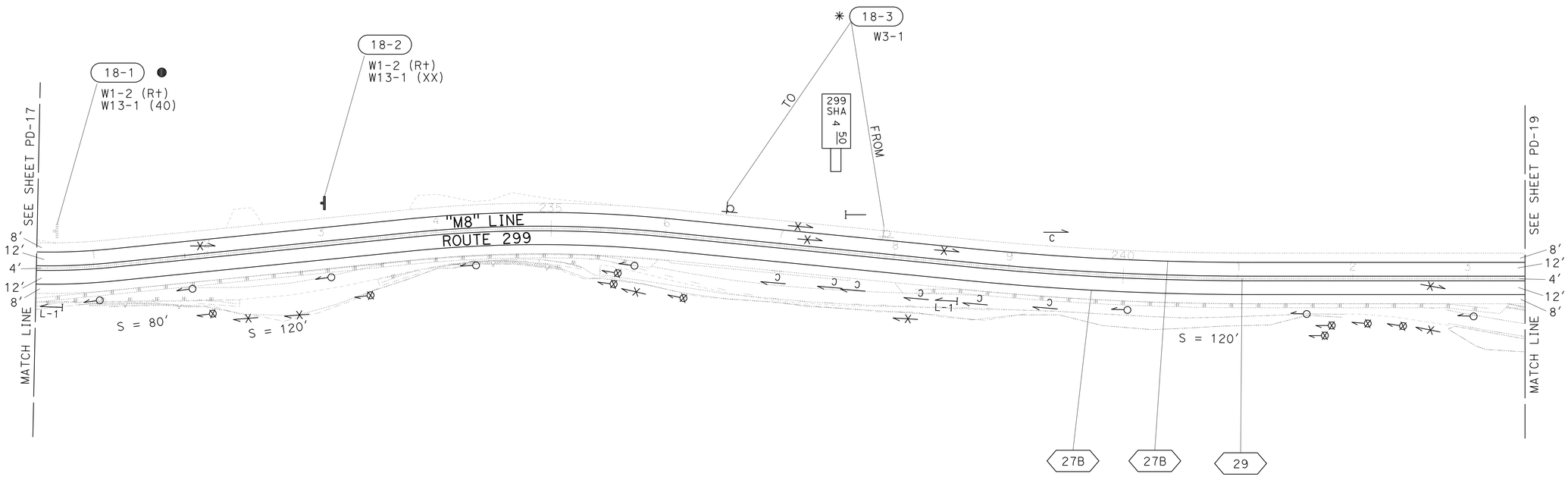

APPROVED FOR PAVEMENT DELINEATION AND SIGN WORK ONLY

PAVEMENT DELINEATION AND SIGN PLAN

SCALE: 1" = 50'

PD-18

REVISED BY	SOCORRO URENA
DATE REVISED	MICHAEL FEAKES
CALCULATED-DESIGNED BY	FUNCTIONAL SUPERVISOR
CHECKED BY	AL TRUJILLO

STATE OF CALIFORNIA - DEPARTMENT OF TRANSPORTATION
Caltrans
DESIGN

P:\proj1\02\3E410_plans\pse\23e410na018.dgn

LAST REVISION 03-04-14
DATE PLOTTED => 25-AUG-2014
TIME PLOTTED => 09:25

Dist	COUNTY	ROUTE	POST MILES TOTAL PROJECT	SHEET No.	TOTAL SHEETS
02	Sha	299	0.3/7.1	331	401

REGISTERED CIVIL ENGINEER 03-04-14 DATE

06-09-14
PLANS APPROVAL DATE

REGISTERED PROFESSIONAL ENGINEER
MICHAEL E. FEAKES
No. C70755
Exp. 6-30-15
CIVIL
STATE OF CALIFORNIA

THE STATE OF CALIFORNIA OR ITS OFFICERS OR AGENTS SHALL NOT BE RESPONSIBLE FOR THE ACCURACY OR COMPLETENESS OF SCANNED COPIES OF THIS PLAN SHEET.

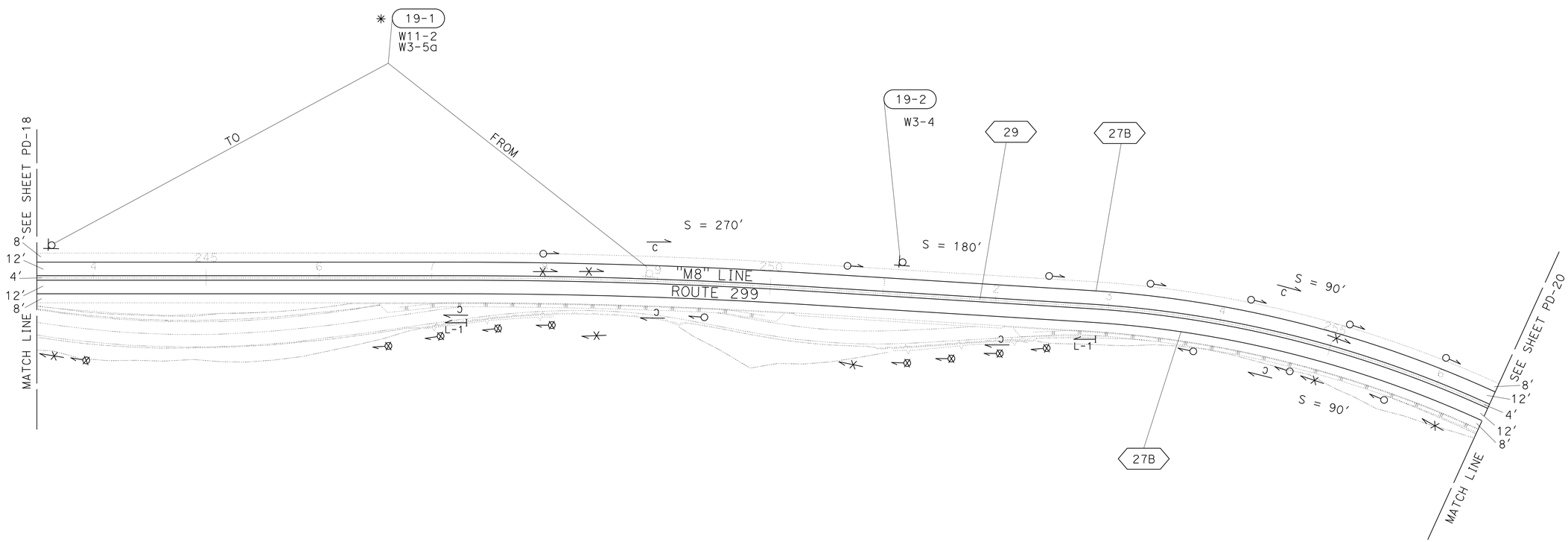

PAVEMENT DELINEATION AND SIGN PLAN

SCALE: 1" = 50'

PD-19

APPROVED FOR PAVEMENT DELINEATION AND SIGN WORK ONLY

CALCULATED-DESIGNED BY	SOCORRO URENA	REVISED BY
CHECKED BY	MICHAEL FEAKES	DATE REVISED

FUNCTIONAL SUPERVISOR: AL TRUJILLO

STATE OF CALIFORNIA - DEPARTMENT OF TRANSPORTATION
Caltrans
DESIGN

P:\proj1\02\3E410_plans\pse\23e410na019.dgn

LAST REVISION 03-04-14 | DATE PLOTTED => 25-AUG-2014 | TIME PLOTTED => 09:25

Dist	COUNTY	ROUTE	POST MILES TOTAL PROJECT	SHEET No.	TOTAL SHEETS
02	Sha	299	0.3/7.1	332	401

REGISTERED CIVIL ENGINEER 03-04-14 DATE

06-09-14
PLANS APPROVAL DATE

REGISTERED PROFESSIONAL ENGINEER
MICHAEL E. FEAKES
No. C70755
Exp. 6-30-15
CIVIL
STATE OF CALIFORNIA

THE STATE OF CALIFORNIA OR ITS OFFICERS OR AGENTS SHALL NOT BE RESPONSIBLE FOR THE ACCURACY OR COMPLETENESS OF SCANNED COPIES OF THIS PLAN SHEET.

NOTE:

1. CULVERT MARKERS FROM STA "M8" 263+60 TO 265+60 TO BE BARRIER MOUNTED (SEE DELINEATION DETAILS).

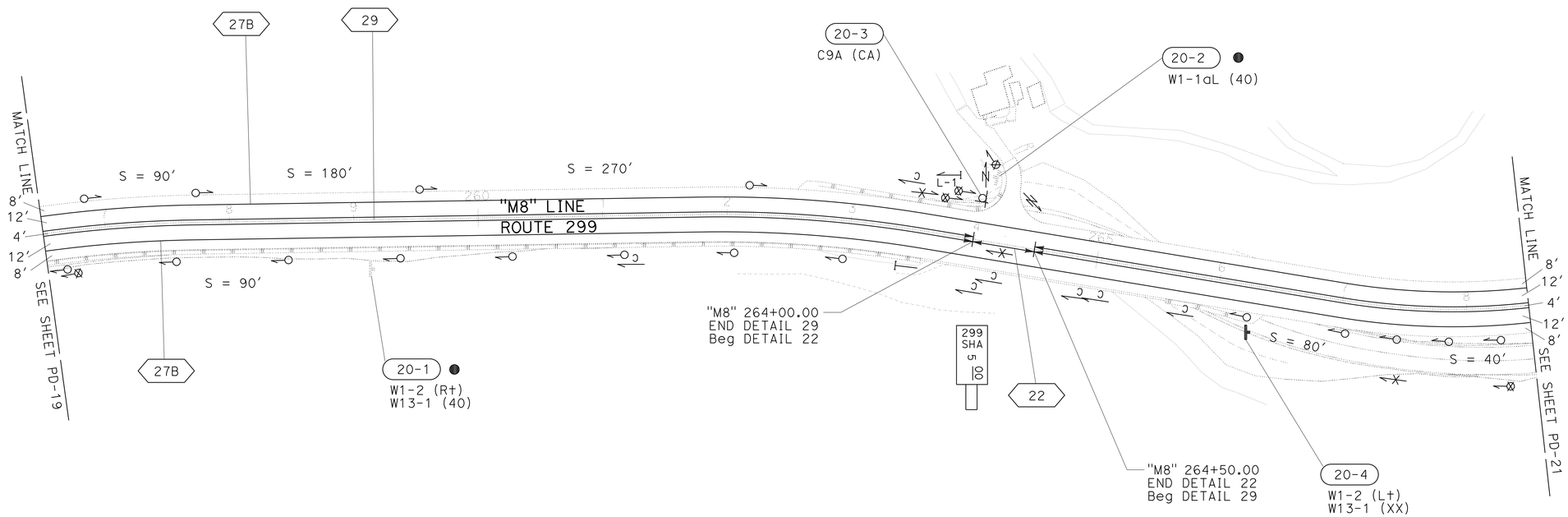

PAVEMENT DELINEATION AND SIGN PLAN

SCALE: 1" = 50′

PD-20

APPROVED FOR PAVEMENT DELINEATION AND SIGN WORK ONLY

STATE OF CALIFORNIA - DEPARTMENT OF TRANSPORTATION
Caltrans
DESIGN

FUNCTIONAL SUPERVISOR: AL TRUJILLO
CALCULATED-DESIGNED BY: SOCORRO URENA
CHECKED BY: MICHAEL FEAKES
REVISED BY
DATE REVISED

P:\proj1\02\3E410_plans\pse\23e410na020.dgn

LAST REVISION 03-04-14
DATE PLOTTED => 25-AUG-2014
TIME PLOTTED => 09:25

BORDER LAST REVISED 7/2/2010
USERNAME => s115152
DGN FILE => 23e410na020.dgn
RELATIVE BORDER SCALE IS IN INCHES 0 1 2 3
UNIT 0316
PROJECT NUMBER & PHASE 02-0002-0042-1
EA: 02-3E4101

Dist	COUNTY	ROUTE	POST MILES TOTAL PROJECT	SHEET No.	TOTAL SHEETS
02	Sha	299	0.3/7.1	333	401

REGISTERED CIVIL ENGINEER 03-04-14 DATE

06-09-14
PLANS APPROVAL DATE

REGISTERED PROFESSIONAL ENGINEER MICHAEL E. FEAKES No. C70755 Exp. 6-30-15 CIVIL STATE OF CALIFORNIA

THE STATE OF CALIFORNIA OR ITS OFFICERS OR AGENTS SHALL NOT BE RESPONSIBLE FOR THE ACCURACY OR COMPLETENESS OF SCANNED COPIES OF THIS PLAN SHEET.

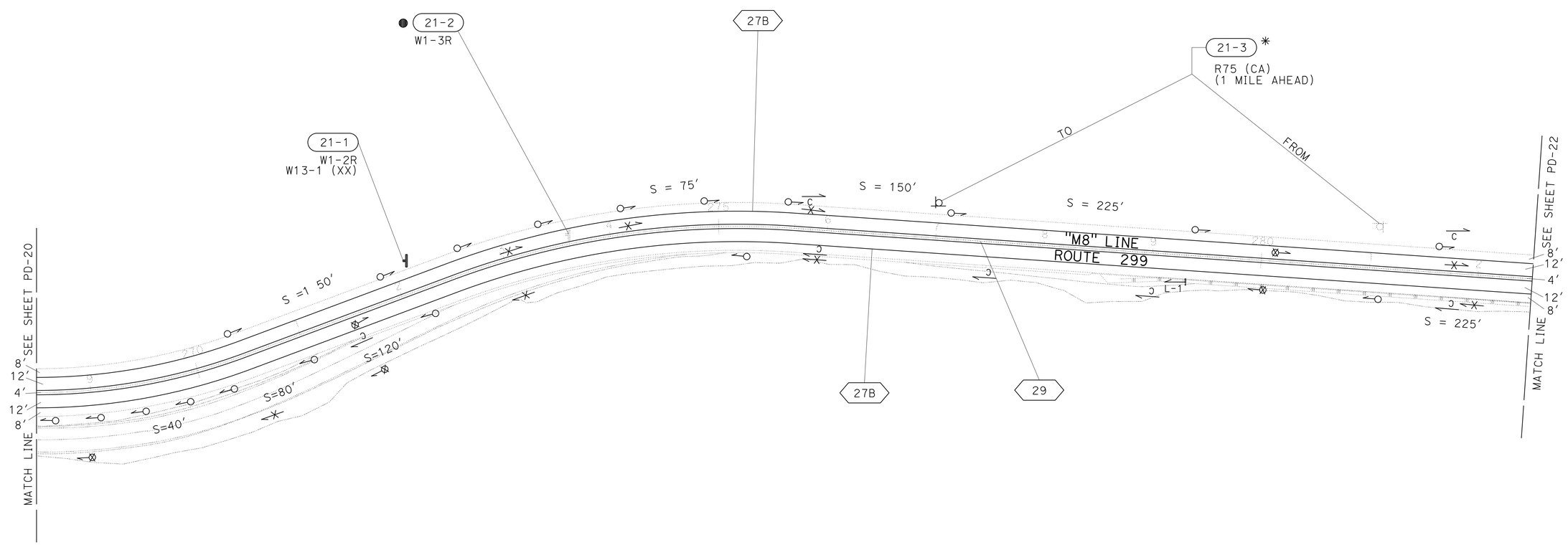

APPROVED FOR PAVEMENT DELINEATION AND SIGN WORK ONLY

PAVEMENT DELINEATION AND SIGN PLAN

SCALE: 1" = 50′

PD-21

CALCULATED-DESIGNED BY	SOCORRO URENA
CHECKED BY	MICHAEL FEAKES
FUNCTIONAL SUPERVISOR	AL TRUJILLO
REVISED BY	
DATE REVISED	

STATE OF CALIFORNIA - DEPARTMENT OF TRANSPORTATION
Caltrans
DESIGN

P:\proj1\02\3E410_plans\pse\23e410na021.dgn

LAST REVISION 03-04-14
DATE PLOTTED => 25-AUG-2014
TIME PLOTTED => 09:25

Dist	COUNTY	ROUTE	POST MILES TOTAL PROJECT	SHEET No.	TOTAL SHEETS
02	Sha	299	0.3/7.1	334	401

REGISTERED CIVIL ENGINEER 03-04-14 DATE

06-09-14
PLANS APPROVAL DATE

REGISTERED PROFESSIONAL ENGINEER
MICHAEL E. FEAKES
No. C70755
Exp. 6-30-15
CIVIL
STATE OF CALIFORNIA

THE STATE OF CALIFORNIA OR ITS OFFICERS OR AGENTS SHALL NOT BE RESPONSIBLE FOR THE ACCURACY OR COMPLETENESS OF SCANNED COPIES OF THIS PLAN SHEET.

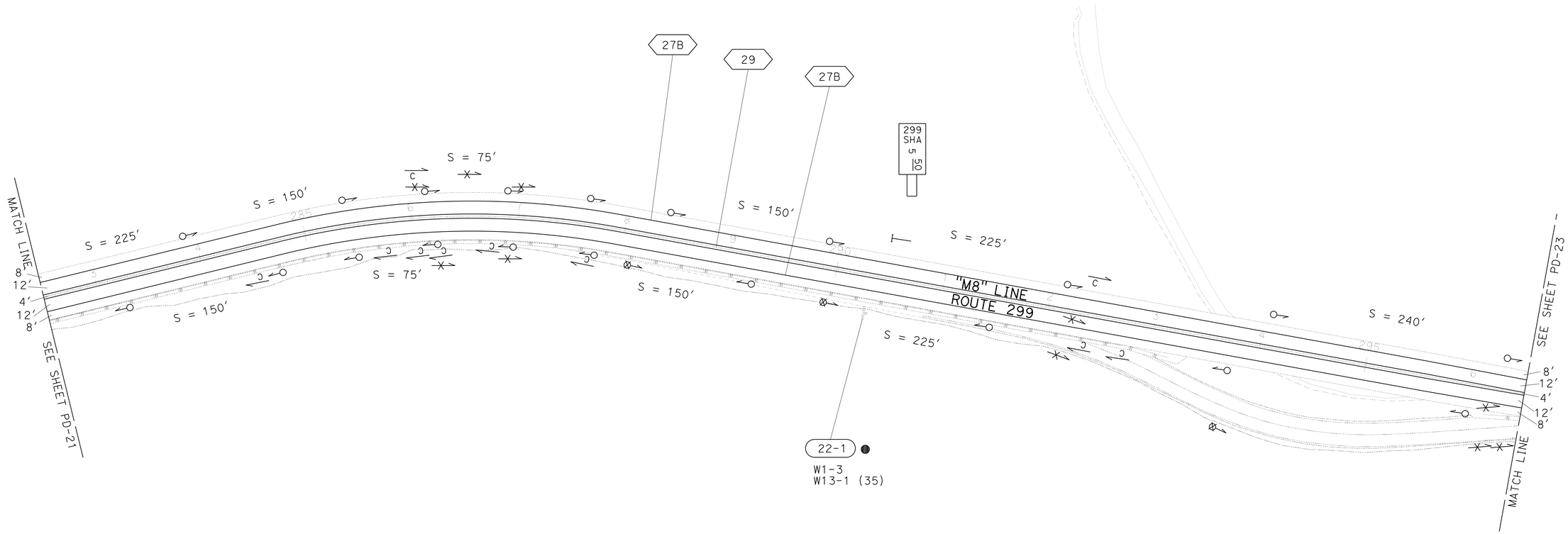

PAVEMENT DELINEATION AND SIGN PLAN

SCALE: 1" = 50′

PD-22

APPROVED FOR PAVEMENT DELINEATION AND SIGN WORK ONLY

SOCORRO URENA — REVISED BY
MICHAEL FEAKES — DATE REVISED
CALCULATED-DESIGNED BY
CHECKED BY
FUNCTIONAL SUPERVISOR
AL TRUJILLO

STATE OF CALIFORNIA - DEPARTMENT OF TRANSPORTATION
Caltrans
DESIGN

P:\proj1\02\3E410_plans\pse\23e410na022.dgn

LAST REVISION DATE PLOTTED => 25-AUG-2014
03-04-14 TIME PLOTTED => 09:25

Dist	COUNTY	ROUTE	POST MILES TOTAL PROJECT	SHEET No.	TOTAL SHEETS
02	Sha	299	0.3/7.1	335	401

REGISTERED CIVIL ENGINEER 03-04-14 DATE

06-09-14
PLANS APPROVAL DATE

REGISTERED PROFESSIONAL ENGINEER MICHAEL E. FEAKES No. C70755 Exp. 6-30-15 CIVIL STATE OF CALIFORNIA

THE STATE OF CALIFORNIA OR ITS OFFICERS OR AGENTS SHALL NOT BE RESPONSIBLE FOR THE ACCURACY OR COMPLETENESS OF SCANNED COPIES OF THIS PLAN SHEET.

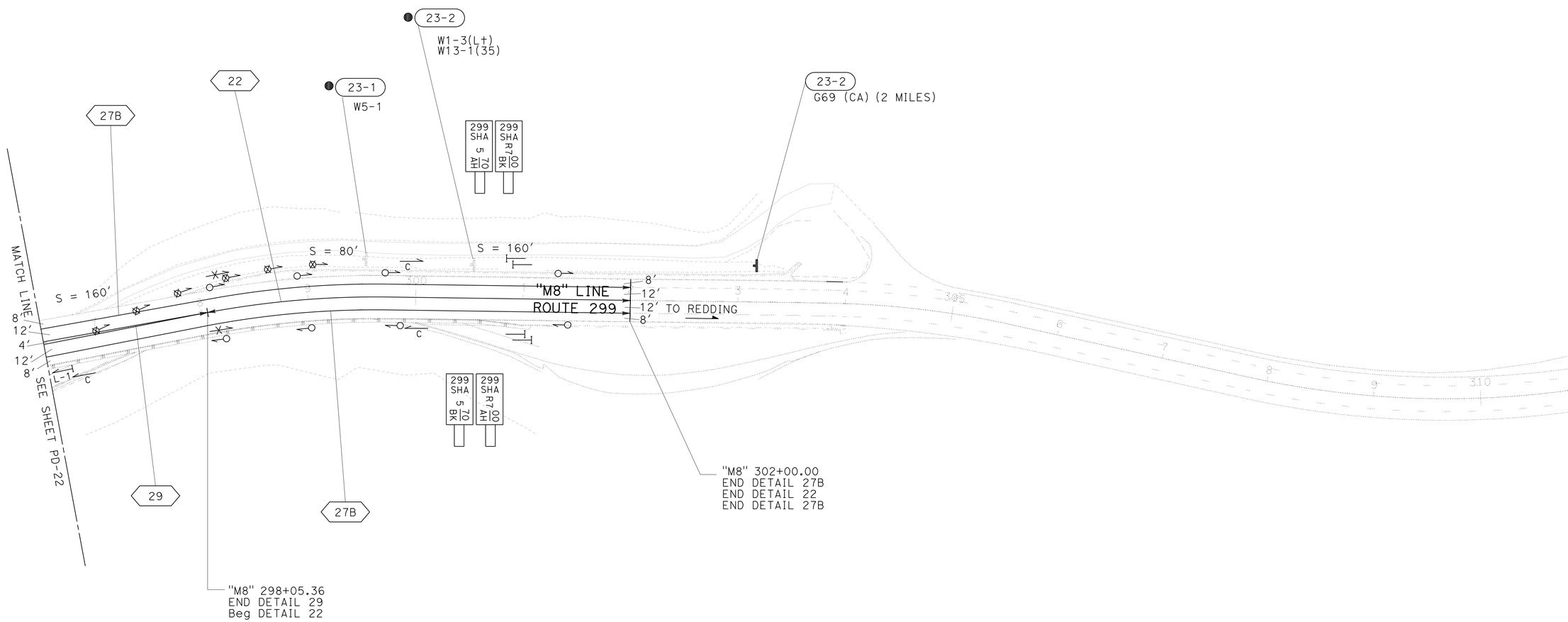

APPROVED FOR PAVEMENT DELINEATION AND SIGN WORK ONLY

PAVEMENT DELINEATION AND SIGN PLAN

SCALE: 1" = 50′

PD-23

STATE OF CALIFORNIA - DEPARTMENT OF TRANSPORTATION
Caltrans® **DESIGN**

FUNCTIONAL SUPERVISOR: AL TRUJILLO
SOCORRO URENA
MICHAEL FEAKES
CALCULATED-DESIGNED BY
CHECKED BY
REVISED BY
DATE REVISED

P:\proj1\02\3E410_plans\pse\23e410na023.dgn

LAST REVISION 03-04-14 | DATE PLOTTED => 25-AUG-2014 | TIME PLOTTED => 09:25

BORDER LAST REVISED 7/2/2010 | USERNAME => s115152 | DGN FILE => 23e410na023.dgn | RELATIVE BORDER SCALE IS IN INCHES 0 1 2 3 | UNIT 0316 | PROJECT NUMBER & PHASE 02-0002-0042-1 | EA: 02-3E4101

Dist	COUNTY	ROUTE	POST MILES TOTAL PROJECT	SHEET No.	TOTAL SHEETS
02	Sha	299	0.3/7.1	336	401

REGISTERED CIVIL ENGINEER 03-04-14 DATE

06-09-14
PLANS APPROVAL DATE

REGISTERED PROFESSIONAL ENGINEER MICHAEL E. FEAKES No. C70755 Exp. 6-30-15 CIVIL STATE OF CALIFORNIA

THE STATE OF CALIFORNIA OR ITS OFFICERS OR AGENTS SHALL NOT BE RESPONSIBLE FOR THE ACCURACY OR COMPLETENESS OF SCANNED COPIES OF THIS PLAN SHEET.

NOTES:

1. THE MARKER MUST BE WHITE (NON-REFLECTIVE) TARGET PLATE WITH BLACK SERIES D NUMERALS AND LETTERS.
2. "BK" (BACK), "AH" (AHEAD), OR A BLANK MUST APPLY AS DIRECTED BY THE ENGINEER.
3. ALL INFORMATION MUST BE IN ENGLISH UNITS (MILES).

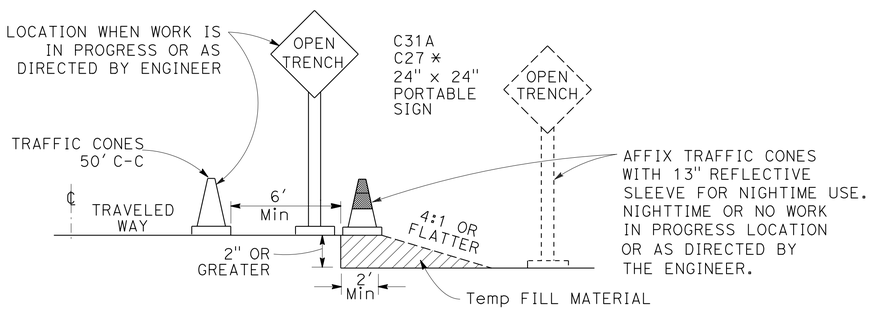

OPEN TRENCH SIGNING AND MARKING

* PLACE AT 250' INTERVALS THROUGH THE OPEN TRENCH AREA ALTERNATE C27 (OPEN TRENCH) AND C31A (NO SHOULDER) SIGNS

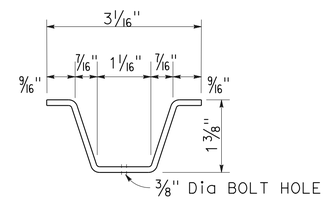

METAL MARKER POST SECTION

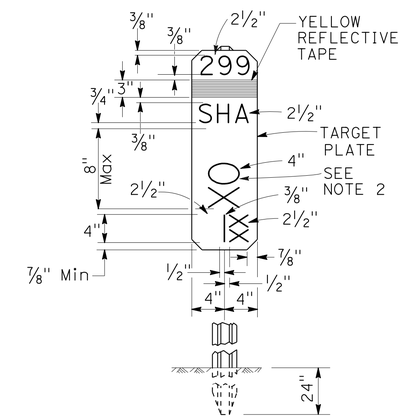

MILEPOST MARKER DETAIL

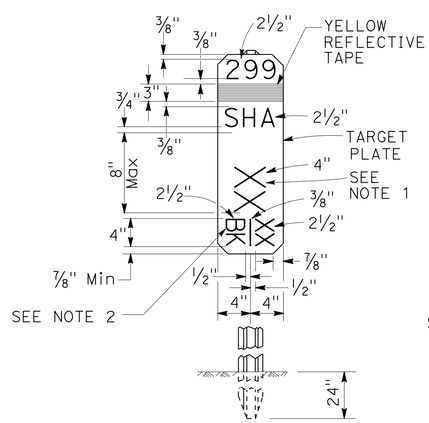

FRONT
BACK

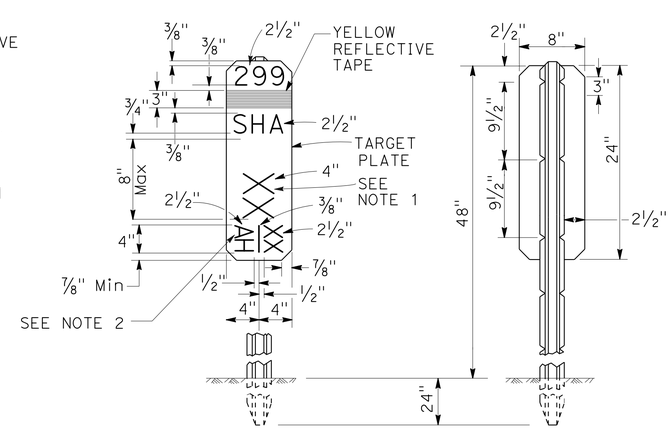

FRONT
AHEAD

REAR

MILEPOST MARKER DETAIL

"M8" 300+95

MILEPOST MARKER

STATION	POST MILE	QUANTITY
"M8" 26+40	0.50	1
"M8" 52+80	1.00	1
"M8" 79+20	1.50	1
"M8" 105+60	2.00	1
"M8" 132+00	2.50	1
"M8" 158+40	3.00	1
"M8" 184+80	3.50	1
"M8" 211+20	4.00	1
"M8" 237+60	4.50	1
"M8" 263+60	5.00	1
"M8" 290+40	5.50	1
"M8" 300+95	5.70/R7.00	4

PAVEMENT DELINEATION AND SIGN DETAILS

NO SCALE

PDD-1

REVISED BY | DATE REVISED
SOCORRO URENA | MICHAEL FEAKES
CALCULATED-DESIGNED BY | CHECKED BY
FUNCTIONAL SUPERVISOR | AL TRUJILLO

STATE OF CALIFORNIA - DEPARTMENT OF TRANSPORTATION
Caltrans
DESIGN

P:\proj1\02\3E410_plans\pse\23e410nb001.dgn

LAST REVISION 03-04-14 | DATE PLOTTED => 25-AUG-2014 TIME PLOTTED => 09:25

Dist	COUNTY	ROUTE	POST MILES TOTAL PROJECT	SHEET No.	TOTAL SHEETS
02	Sha	299	0.3/7.1	337	401

REGISTERED CIVIL ENGINEER 03-04-14 DATE

06-09-14
PLANS APPROVAL DATE

REGISTERED PROFESSIONAL ENGINEER MICHAEL E. FEAKES No. C70755 Exp. 6-30-15 CIVIL STATE OF CALIFORNIA

THE STATE OF CALIFORNIA OR ITS OFFICERS OR AGENTS SHALL NOT BE RESPONSIBLE FOR THE ACCURACY OR COMPLETENESS OF SCANNED COPIES OF THIS PLAN SHEET.

MARKER (CULVERT)

DRAINAGE SYSTEM	STATION "M8" LINE	L+/R+	MARKER (CULVERT)	POST MILES
0.38	19+94	R+	1	0.38
0.46	22+75	R+	1	0.43
0.46	24+09	L+	1	0.46
0.46	24+50	R+	1	0.46
0.55	28+83	L+	1	0.55
0.55	29+50	R+	1	0.56
0.57	28+87	R+	1	0.55
0.57	29+50	R+	1	0.56
0.57	29+80	R+	1	0.56
0.57	31+00	L+	1	0.59
0.68	34+62	L+	1	0.66
0.68	35+89	L+	1	0.68
0.68	36+10	L+	1	0.68
0.68	36+50	L+	1	0.69
0.70	36+55	R+	1	0.69
0.70	36+75	L+	1	0.70
0.74	38+31	R+	1	0.73
0.74	39+25	R+	1	0.74
0.74	39+41	L+	1	0.75
0.74	40+19	R+	1	0.76
0.81	41+70	L+/R+	2	0.79
0.81	42+75	R+	1	0.81
0.81	42+94	R+	1	0.81
0.81	44+25	R+	1	0.84
0.81	44+82	R+	1	0.85
0.95	47+00	L+	1	0.89
0.94	49+24	R+	1	0.93
0.94	49+58	R+	1	0.94
0.95	50+25	L+/R+	2	0.95
0.95	51+00	L+	1	0.97
0.95	51+25	L+	1	0.97
0.95	51+42	L+	1	0.97
0.95	51+75	L+	1	1.00
1.03	53+88	L+	1	1.02
1.03	55+73	R+	1	1.06
1.11	58+25	L+	1	1.10
1.11	58+49	R+	1	1.11
1.11	58+58	R+	1	1.11
1.20	61+59	R+	1	1.17
1.20	61+98	R+	1	1.17
1.20	62+21	R+	1	1.18
1.20	62+33	L+	1	1.18
1.20	63+50	L+/R+	2	1.20
1.30	68+00	R+	1	1.29
1.30	69+03	L+	1	1.31
1.32	69+25	L+	1	1.31
1.32	69+63	R+	1	1.32
1.43	71+00	L+	1	1.34

MARKER (CULVERT)

DRAINAGE SYSTEM	STATION "M8" LINE	L+/R+	MARKER (CULVERT)	POST MILES
1.43	73+00	L+	1	1.38
1.43	75+75	L+	1	1.43
1.43	78+50	L+	2	1.49
1.43	79+25		1	1.50
1.43	79+60		1	1.51
1.53	80+76	R+	1	1.53
1.53	82+00	L+	1	1.55
1.60	84+42	R+	1	1.60
1.60	84+46	R+	1	1.60
1.63	85+70	R+	1	1.62
1.63	86+15	R+	1	1.63
1.65	87+14	R+	1	1.65
1.65	87+58	R+	1	1.66
1.72	87+75	L+	1	1.66
1.72	88+50	R+	1	1.68
1.72	90+30	L+	1	1.71
1.72	90+75	R+	1	1.72
1.75	92+22	R+	1	1.75
1.75	92+58	R+	1	1.75
1.92	93+75	R+	1	1.78
1.92	94+37	L+/R+	2	1.79
1.92	97+00	L+	1	1.84
1.92	101+50	L+	1	1.92
1.92	104+95	L+	1	1.99
1.92	105+00	R+	1	1.99
1.92	105+31	L+	1	1.99
1.92	106+50	L+	1	2.02
1.92	107+75	L+	1	2.04
1.92	108+75	L+	1	2.06
1.92	108+85	L+	2	2.06
	107+75	R+	1	2.04
	108+87	L+	1	2.06
	112+50	R+	1	2.13
	114+00	R+	1	2.16
	116+38	R+	1	2.20
	116+94	R+	1	2.21
	117+40	L+	1	2.22
	118+15	L+	1	2.24
	119+30	L+	1	2.26
	120+15	R+	1	2.28
	119+91	R+	1	2.27
	120+64	L+	1	2.28
	125+40	R+	1	2.38
	126+15	L+	1	2.39
	127+40	L+/R+	2	2.41
	130+24	R+	1	2.47
	130+96	L+	1	2.48
	131+82	R+	1	2.50
	132+00	L+	1	2.50

MARKER (CULVERT)

DRAINAGE SYSTEM	STATION "M8" LINE	L+/R+	MARKER (CULVERT)	POST MILES
	132+30	L+	1	2.51
	132+15	R+	1	2.50
	134+15	L+/R+	2	2.54
	138+05	R+	1	2.61
	138+68	L+	1	2.63
	141+55	L+	1	2.68
	141+95	R+	1	2.69
	142+26	R+	1	2.69
	144+40	R+	1	2.73
	144+65	R+	1	2.74
	147+24	R+	1	2.79
	150+15	R+	1	2.84
	151+13	L+	1	2.86
	153+90	L+/R+	2	2.91
	159+38	R+	1	3.02
	159+98	L+	1	3.03
	162+90	R+	1	3.09
	163+72	L+	1	3.10
	165+02	R+	1	3.13
	165+90	L+	1	3.14
	166+15	R+	1	3.15
	169+92	R+	1	3.22
	170+32	L+	1	3.23
	172+79	L+	1	3.27
	173+04	R+	1	3.28
3.35	176+68	L+	1	3.35
3.35	177+43	R+	1	3.36
3.55	187+20	L+	1	3.54
	186+90	R+	1	3.54
	188+93	L+	1	3.58
	189+66	L+/R+	2	3.59
	192+41	R+	1	3.64
	193+15	R+	1	3.66
	193+28	L+	1	3.66
	193+76	L+	1	3.67
	193+90	L+/R+	2	3.67
	195+36	L+	1	3.70
	198+88	R+	1	3.77
	198+40	R+	1	3.76
	199+15	R+	1	3.77
	199+40	R+	1	3.78
	199+65	R+	1	3.78
	199+90	R+	1	3.79
	200+91	R+	1	3.81
	209+53	L+/R+	2	3.97
	214+40	R+	1	4.06
	214+42	L+	1	4.06

MARKER (CULVERT)

DRAINAGE SYSTEM	STATION "M8" LINE	L+/R+	MARKER (CULVERT)	POST MILES
	214+90	R+	1	4.07
	218+65	L+/R+	2	4.14
4.23	223+25	R+	1	4.23
4.23	223+40	R+	1	4.23
4.23	223+58	L+/R+	2	4.23
4.51	237+00	R+	1	4.49
4.51	237+50	R+	1	4.50
4.51	237+65	R+	1	4.50
4.51	238+25	R+	1	4.51
4.51	238+75	R+	1	4.52
4.53b	239+37	L+/R+	2	4.53
4.68	247+25	R+	1	4.68
4.72a	249+00	L+/R+	2	4.72
4.77	252+00	R+	1	4.77
4.82a	254+50	L+/R+	2	4.82
4.95	261+25	R+	1	4.95
5.00	264+80	L+/R+	2	5.00
5.01	264+20	R+	1	5.01
5.01	264+90	R+	1	5.02
5.01	265+05	R+	1	5.02
5.01	265+75	R+	1	5.03
5.14	271+50	R+	1	5.14
5.22a	275+75	L+/R+	2	5.22
5.27	277+50	R+	1	5.26
5.27	279+00	R+	1	5.28
5.34	281+78	L+/R+	2	5.34
5.40	284+50	R+	1	5.39
5.40	285+75	R+	1	5.41
5.41b	286+05	L+/R+	2	5.42
5.44	286+25	R+	1	5.42
5.44	286+75	R+	1	5.43
5.44	287+75	R+	1	5.45
5.53	292+38	L+/R+	2	5.54
5.55	292+75	R+	1	5.54
5.62	296+75	R+	1	5.62
5.68	300+00	L+/R+	2	5.68

NOTES:

1. THE MARKER SHALL BE WHITE (NON-REFLECTIVE) TARGET PLATE WITH BLACK SERIES D NUMERALS AND LETTERS.
2. ALL INFORMATION SHALL BE IN ENGLISH UNITS (MILES).
3. CULVERT MARKERS FROM STATION "M8" 263+61 TO 265+60 SHALL BE BARRIER MOUNTED. (SEE DETAIL THIS SHEET)

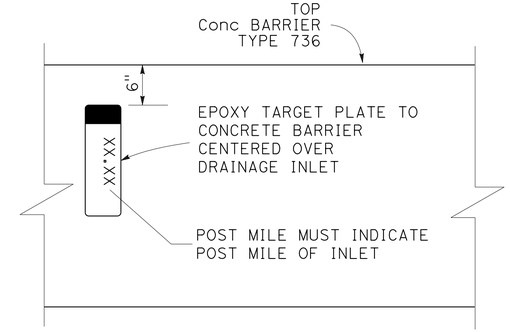

CULVERT MARKER (BARRIER MOUNTED)

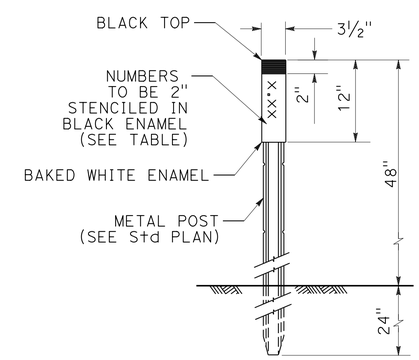

CULVERT MARKER DETAIL

PAVEMENT DELINEATION AND SIGN DETAILS

NO SCALE

PDD-2

REVISED BY | DATE REVISED
SOCORRO URENA | MICHAEL FEAKES
CALCULATED-DESIGNED BY | CHECKED BY
FUNCTIONAL SUPERVISOR | AL TRUJILLO

STATE OF CALIFORNIA - DEPARTMENT OF TRANSPORTATION
Caltrans
DESIGN

P:\proj1\02\3E410_plans\pse\23e410nb002.dgn

LAST REVISION 03-04-14 | DATE PLOTTED => 25-AUG-2014 | TIME PLOTTED => 09:25

Dist	COUNTY	ROUTE	POST MILES TOTAL PROJECT	SHEET No.	TOTAL SHEETS
02	Sha	299	0.3/7.1	338	401

REGISTERED CIVIL ENGINEER 03-04-14 DATE

06-09-14
PLANS APPROVAL DATE

REGISTERED PROFESSIONAL ENGINEER MICHAEL E. FEAKES No. C70755 Exp. 6-30-15 CIVIL STATE OF CALIFORNIA

THE STATE OF CALIFORNIA OR ITS OFFICERS OR AGENTS SHALL NOT BE RESPONSIBLE FOR THE ACCURACY OR COMPLETENESS OF SCANNED COPIES OF THIS PLAN SHEET.

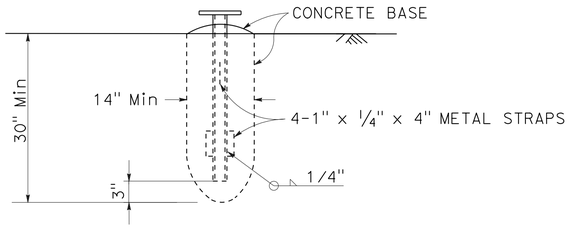

FOUNDATION DETAIL

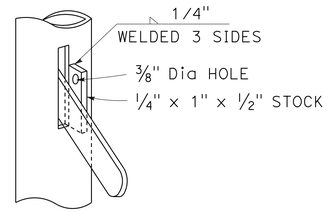

HANDLE LOCK

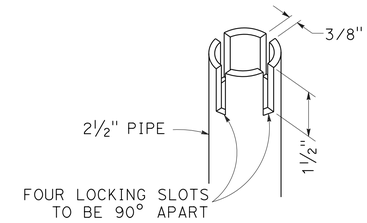

KEYED LOCK

NOTE: BEFORE POURING PCC BASE, HAVE ONE SET OF SLOTS PARALLEL WITH ROAD.

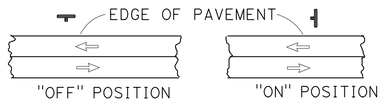

POSITION OF SIGNS

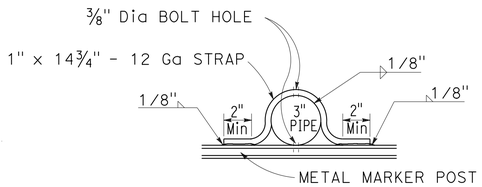

DETAIL C

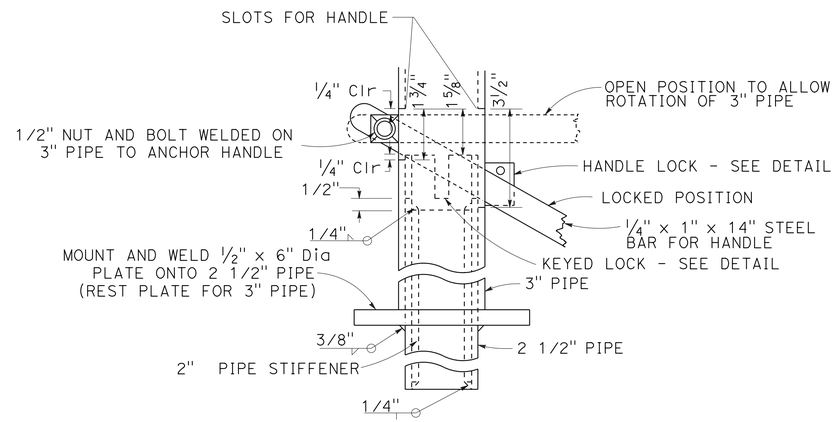

DETAIL B

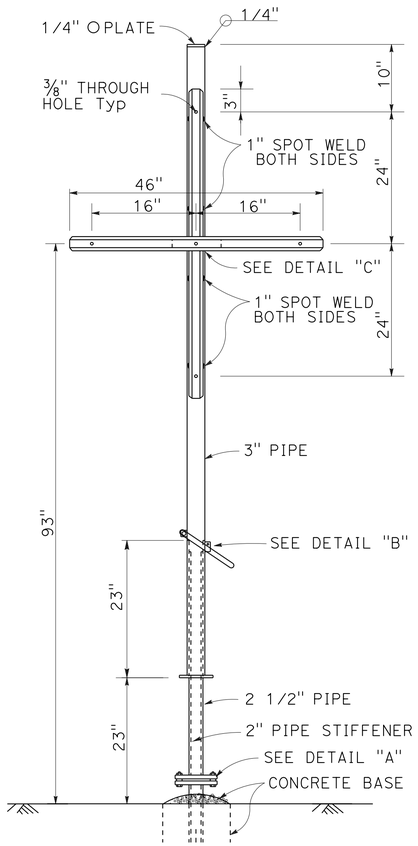

MOUNTING DETAIL

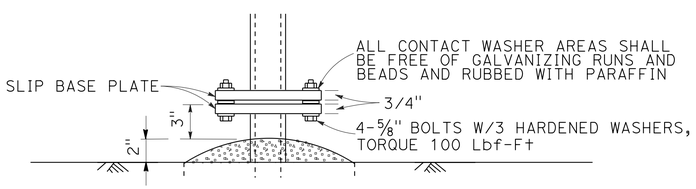

ELEVATION

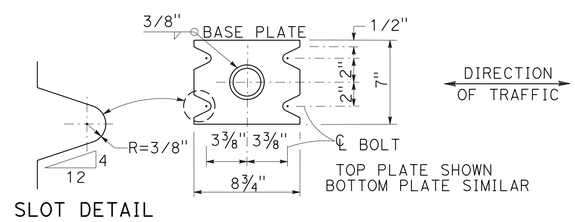

SLOT DETAIL

PLAN

DETAIL A

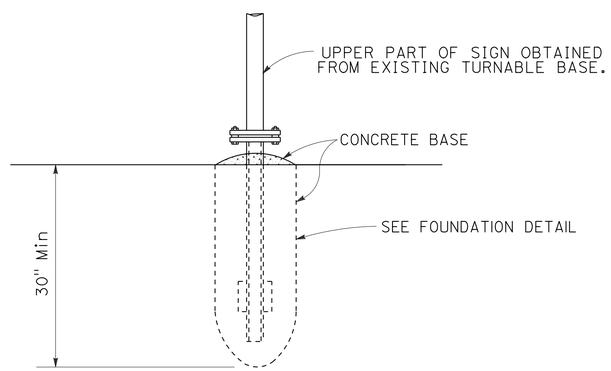

RECONSTRUCT TURNABLE SIGN

TURNABLE ROADSIDE SIGN DETAILS

PAVEMENT DELINEATION AND SIGN DETAILS

NO SCALE

PDD-3

STATE OF CALIFORNIA - DEPARTMENT OF TRANSPORTATION
DESIGN
Caltrans®

REVISED BY	DATE REVISED
SOCORRO URENA	MICHAEL FEAKES

CALCULATED-DESIGNED BY	CHECKED BY

FUNCTIONAL SUPERVISOR: AL TRUJILLO

P:\proj1\02\3E410_plans\pse\23e410nb003.dgn

LAST REVISION 03-04-14 | DATE PLOTTED => 25-AUG-2014 | TIME PLOTTED => 09:25

Dist	COUNTY	ROUTE	POST MILES TOTAL PROJECT	SHEET No.	TOTAL SHEETS
02	Sha	299	0.3/7.1	339	401

REGISTERED CIVIL ENGINEER 03-04-14 DATE

06-09-14
PLANS APPROVAL DATE

REGISTERED PROFESSIONAL ENGINEER MICHAEL E. FEAKES No. C70755 Exp. 6-30-15 CIVIL STATE OF CALIFORNIA

THE STATE OF CALIFORNIA OR ITS OFFICERS OR AGENTS SHALL NOT BE RESPONSIBLE FOR THE ACCURACY OR COMPLETENESS OF SCANNED COPIES OF THIS PLAN SHEET.

NOTES:

1. (N) - NOT A SEPARATE PAY ITEM, FOR INFORMATION ONLY.
2. CALIFORNIA SIGN CODES ARE DESIGNATED BY (CA), OTHERWISE, FEDERAL SIGN CODES ARE SHOWN.

MATERIAL SUMMARY CONTRACTOR FURNISHED SIGNS

SHEET No.	SIGN No.	(N) SIGN CODE	(N) PANEL SIZE (INCHES)	(N) SINGLE FACED	BACKGROUND (N) SHEETING COLOR	BACKGROUND (N) RETROREFLECTIVE ASTM TYPE	LEGEND (N) SHEETING COLOR	LEGEND (N) RETROREFLECTIVE ASTM TYPE	(N) PROTECTIVE OVERLAY (PREMIUM)	ROADSIDE SIGN SINGLE SHEET UNFRAMED ALUMINUM (N) 0.063"	DESCRIPTION (REMARKS)
PD-1	1-1	W7-1b	36 X 36	X	YELLOW	III	BLACK	II		9.00	8% STEEP GRADE SYMBOL
		W7-3aP (4 MILES)	24 X 18	X	YELLOW	III	BLACK	II		3.00	"NEXT 4 MILES"
PD-3	3-1	G17 (CA) (3000 FT)	36 X 18	X	GREEN	III	WHITE	III	X	4.50	"ELEVATION 3000 FT"
	3-4	G17 (CA) (3000 FT)	36 X 18	X	GREEN	III	WHITE	III	X	4.50	"ELEVATION 3000 FT"
	3-5	R4-14	30 X 42	X	WHITE	III	BLACK	II		8.75	"SLOW VEHICLES MUST TURNOUT"
PD-7	7-4	R4-14	30 X 42	X	WHITE	III	BLACK	II		8.75	"SLOW VEHICLES MUST TURNOUT"
	7-5	W1-2	36 X 36	X	YELLOW	III	BLACK	II		9.00	CURVE SYMBOL
		W13-1 (XX)	24 X 24	X	YELLOW	III	BLACK	II		4.00	"XX MPH"
PD-16	16-1	G69 (CA) (AHEAD)	48 X 36	X	GREEN	III	WHITE	III	X	12.00	"PASSING LANE AHEAD"
PD-17	17-4	W1-2 (Lt)	36 X 36	X	YELLOW	III	BLACK	II		9.00	CURVE SYMBOL
		W13-1 (XX)	24 X 24	X	YELLOW	III	BLACK	II		4.00	"XX MPH"
PD-18	18-2	W1-2 (Rt)	36 X 36	X	YELLOW	III	BLACK	II		9.00	CURVE SYMBOL
		W13-1 (XX)	24 X 24	X	YELLOW	III	BLACK	II		4.00	"XX MPH"
PD-19	19-2	W3-4	36 X 36	X	YELLOW	III	BLACK	II		9.00	"BE PREPARED TO STOP"
PD-20	20-3	C9A (CA)	36 X 36	X	YELLOW	III	BLACK	II		9.00	FLAGMAN AHEAD SYMBOL
	20-4	W1-2 (Lt)	36 X 36	X	YELLOW	III	BLACK	II		9.00	CURVE SYMBOL
		W13-1 (XX)	24 X 24	X	YELLOW	III	BLACK	II		4.00	"XX MPH"
PD-21	21-1	W1-2 (Rt)	36 X 36	X	YELLOW	III	BLACK	II		9.00	CURVE SYMBOL
		W13-1 (XX)	24 X 24	X	YELLOW	III	BLACK	II		4.00	"XX MPH"
PD-23	23-3	G69 (CA) (AHEAD)	48 X 36	X	GREEN	III	WHITE	III	X	12.00	"PASSING LANE AHEAD"

PAVEMENT DELINEATION AND SIGN DETAILS

PDD-4

REVISED BY | DATE REVISED
SOCORRO URENA | MICHAEL FEAKES
CALCULATED-DESIGNED BY | CHECKED BY
FUNCTIONAL SUPERVISOR
AL TRUJILLO

STATE OF CALIFORNIA - DEPARTMENT OF TRANSPORTATION
Caltrans
DESIGN

P:\proj1\02\3E410_plans\pse\23e410nb004.dgn

LAST REVISION 03-04-14 | DATE PLOTTED => 25-AUG-2014 | TIME PLOTTED => 09:25

Dist	COUNTY	ROUTE	POST MILES TOTAL PROJECT	SHEET No.	TOTAL SHEETS
02	Sha	299	0.3/7.1	340	401

REGISTERED CIVIL ENGINEER 03-04-14 DATE

06-09-14
PLANS APPROVAL DATE

REGISTERED PROFESSIONAL ENGINEER MICHAEL E. FEAKES No. C70755 Exp. 6-30-15 CIVIL STATE OF CALIFORNIA

THE STATE OF CALIFORNIA OR ITS OFFICERS OR AGENTS SHALL NOT BE RESPONSIBLE FOR THE ACCURACY OR COMPLETENESS OF SCANNED COPIES OF THIS PLAN SHEET.

NOTE:

1. (N) - NOT A SEPARATE PAY ITEM, FOR INFORMATION ONLY.

THERMOPLASTIC PAVEMENT MARKING

SHEET No.	STATION	TYPE	EA	SQFT
PD-15	"M8" 201+00	TYPE VI ARROW	1	42
	"M8" 203+00	TYPE VI ARROW	1	42
PD-16	"M8" 205+00	TYPE VI ARROW	1	42
PD-17	"M8" 220+40.2 TO 220+80.2	LIMIT LINE	1	50
			TOTAL	176

PAVEMENT DELINEATION QUANTITIES

STATION "M8" LINE	THERMOPLASTIC TRAFFIC STRIPE (SPRAYABLE)						PAVEMENT MARKER (RETROREFLECTIVE RECESSED)		
	DETAIL 12	DETAIL 19	DETAIL 22	DETAIL 27B	DETAIL 29	DETAIL 38A	TYPE D	TYPE G	TYPE H
	LF	LF	LF	LF	LF	LF	EA	EA	EA
"M8" 12+88.30 TO 43+06.00				3018					
"M8" 12+88.30 TO 31+34.16					3692		156		
"M8" 12+88.30 TO 198+82.00	18,594							388	
"M8" 12+88.30 TO 302+00.00				28,912					
"M8" 31+34.16 TO 31+84.40			50				2		
"M8" 31+84.40 TO 49+15.00					3462		148		
"M8" 44+06.00 TO 49+00.00						494			
"M8" 49+15.00 TO 49+65.00			50				2		
"M8" 49+65.00 TO 57+75.00					1620		70		
"M8" 49+65.00 TO 97+75.00				4810					
"M8" 57+75.00 TO 58+25.00			50				2		
"M8" 58+25.00 TO 83+75.00					5100		216		
"M8" 83+75.00 TO 84+25.00			50				2		
"M8" 84+25.00 TO 85+67.33					284		14		
"M8" 85+67.33 TO 86+17.33			50				2		
"M8" 86+17.33 TO 92+15.00					1196		52		
"M8" 92+15.00 TO 92+65.00			50				2		
"M8" 92+65.00 TO 111+90.00					3850		164		
"M8" 98+75.00 TO 104+50.00						575			
"M8" 105+50.00 TO 302+00.00				19,650					
"M8" 111+90.00 TO 112+40.00			50				2		
"M8" 112+40.00 TO 131+90.00					3900		166		
"M8" 131+90.00 TO 132+40.00			50				2		
"M8" 132+40.00 TO 190+00.52					11,522		484		
"M8" 182+50.00 TO 183+40.53		93					3		5
"M8" 183+40.53 TO 205+06.12	2166							46	
"M8" 190+00.52 TO 190+50.58			50				2		
"M8" 190+50.58 TO 193+15.53					530		24		
"M8" 193+15.53 TO 193+65.53			50				2		
"M8" 193+65.53 TO 220+14.16					5298		224		
"M8" 198+82.00 TO 201+17.43		236					6		11
"M8" 220+14.16 TO 220+64.16			50				2		
"M8" 220+64.16 TO 264+00.00					8672		364		
"M8" 264+00.00 TO 264+50.00			50				2		
"M8" 264+50.00 TO 298+05.36					6710		282		
"M8" 298+05.36 TO 302+00.00			395				36		
SUBTOTAL	20,760		995	56,390	55,836	1069	2424	434	
FROM STAGE CONSTRUCTION SHEET SCQ-1	3062		100	3402	6502		284	65	
SUBTOTAL	23,822	329	1095	59,792	62,338	1069	2717	499	16
TOTAL					148,445			3233	

PAVEMENT DELINEATION AND SIGN QUANTITIES

PDQ-1

STATE OF CALIFORNIA - DEPARTMENT OF TRANSPORTATION
Caltrans® DESIGN

FUNCTIONAL SUPERVISOR: AL TRUJILLO
CALCULATED-DESIGNED BY: SOCORRO URENA
CHECKED BY: MICHAEL FEAKES
REVISED BY
DATE REVISED

P:\proj1\02\3E410_plans\pse\23e410nc001.dgn

LAST REVISION 03-04-14 DATE PLOTTED => 25-AUG-2014 TIME PLOTTED => 09:25

Dist	COUNTY	ROUTE	POST MILES TOTAL PROJECT	SHEET No.	TOTAL SHEETS
02	Sha	299	0.3/7.1	341	401

REGISTERED CIVIL ENGINEER 03-04-14 DATE

06-09-14
PLANS APPROVAL DATE

REGISTERED PROFESSIONAL ENGINEER MICHAEL E. FEAKES No. C70755 Exp. 6-30-15 CIVIL STATE OF CALIFORNIA

THE STATE OF CALIFORNIA OR ITS OFFICERS OR AGENTS SHALL NOT BE RESPONSIBLE FOR THE ACCURACY OR COMPLETENESS OF SCANNED COPIES OF THIS PLAN SHEET.

NOTE:

1. (N) - NOT A SEPARATE PAY ITEM, FOR INFORMATION ONLY.

MARKERS AND DELINEATORS

SHEET No.	STATION	REMOVE MARKER	REMOVE DELINEATOR	DELINEATOR (CLASS 2) TYPE E	MILEPOST MARKER	MARKER (CULVERT)	OBJECT MARKER (TYPE L)	OBJECT MARKER (TYPE P)	OBJECT MARKER (TYPE L-1)
		EA	EA	EA	EA	EA	EA	EA	EA
PD-1	"M8" 17+50 TO 25+50	9	15	9		4			2
PD-2	"M8" 25+50 TO 35+50	9	7	21	1	7	2	1	1
PD-3	"M8" 35+50 TO 49+00	15	20	43		16			1
PD-4	"M8" 49+00 TO 58+50	12	5	33	1	12	4		2
PD-5	"M8" 58+50 TO 72+50	11	10	26		12			2
PD-6	"M8" 72+50 TO 85+50	10	6	35	1	10	2		3
PD-7	"M8" 85+50 TO 98+50	8	3	33		14	4		2
PD-8	"M8" 98+50 TO 110+28	17	8	25	1	10		1	
PD-9	"M8" 110+28 TO 123+58	9				9			
PD-10	"M8" 123+58 TO 135+58	13			1	12			
PD-11	"M8" 136+58 TO 151+58	10				10			
PD-12	"M8" 151+58 TO 165+50	8			1	7			
PD-13	"M8" 165+50 TO 179+50	8				8			
PD-14	"M8" 179+50 TO 192+50	11		1	1	6	2		
PD-15	"M8" 192+50 TO 204+50	16	10	14		13	2		1
PD-16	"M8" 204+50 TO 216+50	6			1	5			
PD-17	"M8" 216+50 TO 230+50	14	10	15		6		1	
PD-18	"M8" 230+50 TO 243+50	10	9	8	1	7			2
PD-19	"M8" 243+50 TO 256+50	8	9	11		6			2
PD-20	"M8" 256+50 TO 268+50	3	5	17	1	7	2		1
PD-21	"M8" 268+50 TO 282+50	8	5	19		7			1
PD-22	"M8" 282+50 TO 296+50	10	3	20	1	10			
PD-23	"M8" 296+50 TO 302+00	2	6	8	4	3			1
	TOTAL	227	131	338	15	201	18	3	21

PAVEMENT DELINEATION AND SIGN QUANTITIES

PDQ-2

REVISED BY | DATE REVISED
SOCORRO URENA | MICHAEL FEAKES
CALCULATED-DESIGNED BY | CHECKED BY
FUNCTIONAL SUPERVISOR
AL TRUJILLO

STATE OF CALIFORNIA - DEPARTMENT OF TRANSPORTATION
Caltrans DESIGN

P:\proj1\02\3E410_plans\pse\23e410nc002.dgn

LAST REVISION 03-04-14 | DATE PLOTTED => 25-AUG-2014 | TIME PLOTTED => 09:25

Dist	COUNTY	ROUTE	POST MILES TOTAL PROJECT	SHEET No.	TOTAL SHEETS
02	Sha	299	0.3/7.1	342	401

REGISTERED CIVIL ENGINEER 03-04-14 DATE

06-09-14
PLANS APPROVAL DATE

REGISTERED PROFESSIONAL ENGINEER MICHAEL E. FEAKES No. C70755 Exp. 6-30-15 CIVIL STATE OF CALIFORNIA

THE STATE OF CALIFORNIA OR ITS OFFICERS OR AGENTS SHALL NOT BE RESPONSIBLE FOR THE ACCURACY OR COMPLETENESS OF SCANNED COPIES OF THIS PLAN SHEET.

NOTES:

1. (N) - NOT A SEPARATE PAY ITEM, FOR INFORMATION ONLY.
2. CALIFORNIA SIGN CODES ARE DESIGNATED BY (CA), OTHERWISE, FEDERAL SIGN CODES ARE SHOWN.
3. (XX) DENOTES SPEED TO BE DETERMINED BY ENGINEER.

ABBREVIATIONS:

L LENGTH OF SIGN
D DEPTH OF SIGN
FYG FLORESCENT YELLOW GREEN

ROADSIDE SIGNS

SHEET No.	SIGN No.	SIGN CODE	(N) PANEL SIZE (INCHES)	FURNISH SINGLE SHEET ALUMINUM SIGN (0.063"-UNFRAMED)	(N) POST LENGTH	(N) POST EMBED	ROADSIDE SIGN ONE POST 4" X 6"	ROADSIDE SIGN TURNABLE	REMOVE ROADSIDE SIGN	RELOCATE ROADSIDE SIGN	RECONSTRUCT TURNABLE ROADSIDE SIGN	SALVAGE ROADSIDE SIGN	REMARKS
				SQFT	LF	LF	EA	EA	EA	EA	EA	EA	
PD-1	1-1	W7-1b	36 X 36	9.00	16.0	4.5	1						8% STEEP GRADE SYMBOL
		W7-3aP (4 MILES)	24 X 18	3.00									"NEXT 4 MILES"
	1-2	W1-5							1				CURVES SYMBOL
		W7-3a											"NEXT 4 MILES"
	1-3	SOLAR PANEL W1-1a RADAR FEEDBACK SIGN										1	SOLAR PANEL "YOUR SPEED" RADAR SPEED FEEDBACK SIGN
	1-4	R4-3							1				"SLOWER TRAFFIC KEEP RIGHT"
	1-5	W1-6							1				ARROW
	1-6	R68 (CA)							1				"PASSING LANE AHEAD"
PD-2	2-1	W1-1							1				CURVE SYMBOL
		W13-1 (30)											30 MPH
PD-3	3-1	G17 (CA) (3000 FT)	36 X 18	4.50	12	3.5	1						"ELEVATION 3000 FT"
	3-2	G17 (CA) (3000 FT)							1				"ELEVATION 3000 FT"
	3-3	G17 (CA) (3000 FT)							1				"ELEVATION 3000 FT"
	3-4	G17 (CA) (3000 FT)	36 X 18	4.50	12	3.5	1						"ELEVATION 3000 FT"
	3-5	R4-14	30 X 42	8.75	16	4.5	1						"SLOW VEHICLES MUST TURNOUT"
PD-4	4-1	R47 (CA)							1				"$1000 FINE FOR LITTERING"
		S13 (CA)											"CARE FOR CALIFORNIA"
PD-6	6-1	W4-1 (CA) (25)							1				25 MPH CURVE
	6-2	G69 (CA) (2 MILES)								1			"PASSING LANE 2 MILES"
	6-3	R4-1							1				"DO NOT PASS"
	6-4	R4-1							1				"DO NOT PASS"
	6-5	W4-2R							1				"RIGHT LANE DROP SYMBOL"
	6-6	W4-2R							1				"RIGHT LANE DROP SYMBOL"
PD-7	7-1	W9-2							1				"LANE ENDS MERGE LEFT"
	7-2	R4-3							1				"SLOWER TRAFFIC KEEP RIGHT"
	7-3	R68							1				"PASSING LANE AHEAD"
	7-4	R4-14	30 X 42	8.75	16.0	4.5	1						"SLOW VEHICLES MUST TURNOUT"
	7-5	W1-2	36 X 36	9.00	16.0	4.5	1						CURVE SYMBOL
		W13-1 (XX)	24 X 24	4.00									"XX MPH"
PD-8	8-1	W4-1 (CA) (25)							1				25 MPH CURVE
	8-2	W1-1a (25)							1				25 MPH CURVE
	8-3	W1-1							1				CURVE SYMBOL
		W13-1 (25)											25 MPH
PD-9	9-1	R4-1							1				"DO NOT PASS"
	9-2	R4-1							1				"DO NOT PASS"
	9-3	W4-2R							1				"RIGHT LANE DROP SYMBOL"
	9-4	W4-2R							1				"RIGHT LANE DROP SYMBOL"
	9-5	W9-1							1				"RIGHT LANE ENDS"
SUBTOTAL THIS SHEET				51.50			6	0	24	1	0	1	

PAVEMENT DELINEATION AND SIGN QUANTITIES

PDQ-3

REVISED BY | DATE REVISED
SOCORRO URENA | MICHAEL FEAKES
CALCULATED-DESIGNED BY | CHECKED BY
FUNCTIONAL SUPERVISOR
AL TRUJILLO

STATE OF CALIFORNIA - DEPARTMENT OF TRANSPORTATION
Caltrans DESIGN

P:\proj1\02\3E410_plans\pse\23e410nc003.dgn

LAST REVISION 03-04-14 | DATE PLOTTED => 25-AUG-2014 TIME PLOTTED => 09:25

Dist	COUNTY	ROUTE	POST MILES TOTAL PROJECT	SHEET No.	TOTAL SHEETS
02	Sha	299	0.3/7.1	343	401

REGISTERED CIVIL ENGINEER 03-04-14 DATE

06-09-14
PLANS APPROVAL DATE

REGISTERED PROFESSIONAL ENGINEER MICHAEL E. FEAKES No. C70755 Exp. 6-30-15 CIVIL STATE OF CALIFORNIA

THE STATE OF CALIFORNIA OR ITS OFFICERS OR AGENTS SHALL NOT BE RESPONSIBLE FOR THE ACCURACY OR COMPLETENESS OF SCANNED COPIES OF THIS PLAN SHEET.

NOTES:

1. (N) - NOT A SEPARATE PAY ITEM, FOR INFORMATION ONLY.
2. CALIFORNIA SIGN CODES ARE DESIGNATED BY (CA), OTHERWISE, FEDERAL SIGN CODES ARE SHOWN.
3. (XX) DENOTES SPEED TO BE DETERMINED BY ENGINEER.

ROADSIDE SIGNS

SHEET No.	SIGN No.	SIGN CODE	(N) PANEL SIZE (INCHES)	FURNISH SINGLE SHEET ALUMINUM SIGN (0.063"-UNFRAMED)	(N) POST LENGTH	(N) POST EMBED	ROADSIDE SIGN ONE POST 4" X 6"	ROADSIDE SIGN TURNABLE	REMOVE ROADSIDE SIGN	RELOCATE ROADSIDE SIGN	RECONSTRUCT TURNABLE ROADSIDE SIGN	SALVAGE ROADSIDE SIGN	REMARKS
				SQFT	LF	LF	EA	EA	EA	EA	EA	EA	
PD-13	13-1	R4-3							1				"SLOWER TRAFFIC KEEP RIGHT"
	13-2	G69 (CA) (AHEAD)							1				"PASSING LANE AHEAD"
	13-3	G17 (CA) (2000 FT)								1			"ELEVATION 2000 FT"
PD-15	15-1	W4-2R								1			"RIGHT LANE DROP SYMBOL"
PD-16	16-1	G69 (CA) (AHEAD)	48 X 36	12.00	14.0	4.5	1						"PASSING LANE AHEAD"
PD-17	17-1	W50-1 (CA)								1			FALLING ROCK SYMBOL
	17-2	R75-1 (CA) R2-1 (25) R76-1 (CA) R79 (CA) R80 (CA) R77 (CA)									1		CHAIN CONTROL SIGN PACKAGE RECONSTRUCT AT 224+00
	17-3	W1-2 (Lt)							1				CURVE SYMBOL
		W13-1 (40)											"40 MPH"
	17-4	W1-2 (Lt)	36 X 36	9.00	16.0	4.5	1						CURVE SYMBOL
		W13-1 (XX)	24 X 24	4.00									"XX MPH"
PD-18	18-1	W1-2 (Rt)							1				CURVE SYMBOL
		W13-1 (40)											"40 MPH"
	18-2	W1-2 (Rt)	36 X 36	9.00	16.0	4.5	1						CURVE SYMBOL
		W13-1 (XX)	24 X 24	4.00									"XX MPH"
	18-3	W3-1									1		STOP AHEAD SYMBOL RECONSTRUCT AT 236+50
PD-19	19-1	W11-2									1		PEDESTRIAN SYMBOL
		W3-5a											"25 MPH SPEED ZONE AHEAD"
	19-2	W3-4	36 X 36	9.00				1					"BE PREPARED TO STOP"
PD-20	20-1	W1-2 (Rt)							1				CURVE SYMBOL
		W13-1 (40)											"40 MPH"
	20-2	W1-1aL (40)							1				CURVE SYMBOL
	20-3	C9A (CA)	36 X 36	9.00				1					FLAGMAN AHEAD SYMBOL
	20-4	W1-2 (Lt)	36 X 36	9.00	16.0	4.5	1						CURVE SYMBOL
		W13-1 (XX)	24 X 24	4.00									"XX MPH"
PD-21	21-1	W1-2 (Rt)	36 X 36	9.00	16.0	4.5	1						CURVE SYMBOL
		W13-1 (XX)	24 X 24	4.00									"XX MPH"
	21-2	W1-3R							1				CURVES SYMBOL
	21-3	R75 (CA) (1 MILE AHEAD)									1		RECONSTRUCT AT 277+00
PD-22	22-1	W1-3							1				CURVE SYMBOL
		W13-1 (35)											"35 MPH"
PD-23	23-1	W5-1							1				"ROAD NARROWS"
	23-2	W1-3 (Lt)							1				CURVE SYMBOL
		W13-1 (35)											"35 MPH"
	23-3	G69 (CA) (2 MILES)	48 X 36	12.00	16	4.5	1						"PASSING LANE 2 MILES"
SUBTOTAL THIS SHEET				94.00			6	2	10	3	4	0	
SUBTOTAL FROM SHEET PDQ-3				51.50			6	0	24	1	0	1	
TOTAL				145.50			12	2	34	4	4	1	

PAVEMENT DELINEATION AND SIGN QUANTITIES

PDQ-4

REVISED BY | DATE REVISED
SOCORRO URENA | MICHAEL FEAKES
CALCULATED-DESIGNED BY | CHECKED BY
FUNCTIONAL SUPERVISOR | AL TRUJILLO
STATE OF CALIFORNIA - DEPARTMENT OF TRANSPORTATION
Caltrans DESIGN

P:\proj1\02\3E410_plans\pse\23e410nc004.dgn

LAST REVISION 03-04-14 | DATE PLOTTED => 25-AUG-2014 | TIME PLOTTED => 09:25

Dist	COUNTY	ROUTE	POST MILES TOTAL PROJECT	SHEET No.	TOTAL SHEETS
02	Sha	299	0.3/7.1	344	401

REGISTERED CIVIL ENGINEER 03-04-14 DATE

06-09-14
PLANS APPROVAL DATE

REGISTERED PROFESSIONAL ENGINEER SOCORRO V. URENA No. C79633 Exp. 9-30-14 CIVIL STATE OF CALIFORNIA

THE STATE OF CALIFORNIA OR ITS OFFICERS OR AGENTS SHALL NOT BE RESPONSIBLE FOR THE ACCURACY OR COMPLETENESS OF SCANNED COPIES OF THIS PLAN SHEET.

ROADWAY QUANTITIES

STATION	L†/R†	REMOVE VEGETATION CONTROL (MINOR CONCRETE)	REMOVE CABLE RAILING	REMOVE ASHPHALT CONCRETE PAVEMENT (SQFT)	REMOVE ASHPHALT CONCRETE DIKE	REMOVE RETAINING WALL (PORTION)(GABION)	REMOVE RETAINING WALL (PORTION)(SOLDIER PILE)	REMOVE RETAINING WALL (SOIL NAIL)	REMOVE RETAINING WALL (PORTION)(MASONRY)	REMOVE SACK CONCRETE SLOPE PROTECTION	RESET GATE	COMMENTS
		SQYD	LF	SQFT	LF	SQYD	SQFT	SQFT	SQFT	SQFT	EA	
"M8" 13+25.63 TO 17+75.00	R†	214										
"M8" 13+67.13 TO 17+75.00	R†				376							
"M8" 19+35.00 TO 20+17.74	R†		85									
"M8" 19+40.00 TO 20+14.74	R†					33						
"M8" 26+98.00 TO 31+83.00	L†			21,915								
"M8" 49+62.79 TO 49+71.86	R†										1	
"M8" 51+72.00 TO 56+33.00	R†			32,733								
"M8" 78+52.11 TO 79+26.39	L†/R†								1246			
"M8" 79+00.00 TO 84+18.00	L†			24,336								
"M8" 104+58.83 TO 105+05.13	L†/R†						273					
"M8" 186+30.53 TO 187+28.03	L†	32										
"M8" 232+95.60 TO 234+03.91	L†/R†							911				
"M8" 234+12.73 TO 235+08.85	R†									384		
TOTAL		246	85	78,984	376	33	273	911	1246	384	1	

(N) - NOT A SEPARATE PAY ITEM, FOR INFORMATION ONLY

SUMMARY OF QUANTITIES Q-1

REVISED BY | DATE REVISED

SOCORRO URENA | MICHAEL FEAKES

CALCULATED-DESIGNED BY | CHECKED BY

FUNCTIONAL SUPERVISOR: AL TRUJILLO

STATE OF CALIFORNIA - DEPARTMENT OF TRANSPORTATION

Caltrans® DESIGN

P:\proj1\02\3E410_plans\pse\23e410pa001.dgn

LAST REVISION 03-04-14 | DATE PLOTTED => 25-AUG-2014 | TIME PLOTTED => 09:25

Dist	COUNTY	ROUTE	POST MILES TOTAL PROJECT	SHEET No.	TOTAL SHEETS
02	Sha	299	0.3/7.1	345	401

REGISTERED CIVIL ENGINEER 03-04-14 DATE

06-09-14
PLANS APPROVAL DATE

REGISTERED PROFESSIONAL ENGINEER SOCORRO V. URENA No. C79633 Exp. 9-30-14 CIVIL STATE OF CALIFORNIA

THE STATE OF CALIFORNIA OR ITS OFFICERS OR AGENTS SHALL NOT BE RESPONSIBLE FOR THE ACCURACY OR COMPLETENESS OF SCANNED COPIES OF THIS PLAN SHEET.

NOTES:

1. ROLLED EROSION CONTROL PRODUCT (NETTING) MUST BE CLASS C.
2. (N) - NOT A SEPARATE PAY ITEM, FOR INFORMATION ONLY

ROADWAY QUANTITIES

STATION		COLD PLANE ASPHALT CONCRETE PAVEMENT	ROADWAY EXCAVATION	(N) EMBANKMENT	(N) SELECTED MATERIAL (TYPE A)	(N) SELECTED MATERIAL (TYPE B)	SHOULDER BACKING	ROLLED EROSION CONTROL PRODUCT (NETTING)	1½" PLASTIC PIPE (Sch 40) (SUPPLY LINE)	6" PLASTIC PIPE (Sch 40) (SUPPLY LINE)	CLASS 2 AGGREGATE BASE (CY)	HOT MIX ASPHALT (TYPE A)	TACK COAT	RAIL ELEMENT WALL	ROCK SLOPE PROTECTION (1/4 TON, METHOD B) (CY)	ROCK SLOPE PROTECTION (FACING, METHOD B) (CY)	ROCK SLOPE PROTECTION (1 TON, METHOD B) (CY)	ROCK SLOPE PROTECTION (No. 2, METHOD B)	ROCK SLOPE PROTECTION FABRIC (CLASS 10)	COMMENTS
		SQYD	CY	CY	CY	CY	TON	SQFT	LF	LF	CY	TON	TON	SQFT	CY	CY	CY	CY	SQYD	
"M8" 13+00.82 TO 301+25.00	L+/R+											1,129								FROM HMA DIKES
"M8" 17+50.00 TO 17+75.00	L+/R+	145																		CONFORM
"M8" 17+50.00 TO 110+27.82	L+/R+		861,675	1,392,601	6,196	303,036						22,209	15.85							
"M8" 17+75.00 TO 109+96.56	L+/R+										12,824									
"M8" 22+70.41 TO 97+25.19	L+/R+							636,957												
"M8" 23+75.00	R+														25		50			ROCK BUTTRESS
"M8" 31+30.00	R+														25		50			ROCK BUTTRESS
"M8" 55+25.00	R+														25		50			ROCK BUTTRESS
"M8" 62+50.00	R+														25		50			ROCK BUTTRESS
"M8" 80+90.00	R+														25		50			ROCK BUTTRESS
"M8" 90+50.00	R+														25		50			ROCK BUTTRESS
"M8" 95+80.00	R+														25		50			ROCK BUTTRESS
"M8" 105+50.00 TO 108+80.20	R+													675						
"M8" 109+50.00 TO 110+27.82	L+/R+	484																		CONFORM
"M8" 169+25.00 TO 201+50.00	L+/R+	8290	66,749	689								1,937	2.57							
"M8" 169+53.15 TO 201+17.43	L+/R+										670									
"M8" 216+65.53 TO 217+15.53	L+/R+	294			123															CONFORM
"M8" 216+65.53 TO 301+25.00	L+/R+		393,285	11,127			1212					15,670	11.01							
"M8" 222+20.20 TO 300+97.56	L+/R+										8347									
"M8" 219+66.57 TO 221+17.20	R+	143																		CONFORM
"M8" 263+25.00 TO 265+93.00	L+														59	29		27	196	
"M8" 263+94.90 TO 264+62.00	L+/R+								281	89										
"M8" 285+92.00	L+/R+								108	100										
"M8" 297+25.00 TO 300+25.00	R+							17,289							793				1616	
"M8" 300+97.56 TO 301+25.00	R+	138																		CONFORM
"D1" 0+29.13 TO 2+89.76	L+/R+		1321								37	17								DRIVEWAY 1
"D2" 0+30.00 TO 0+65.78	L+/R+										8	15								DRIVEWAY 2
"D3" 0+30.00 TO 0+75.00	L+/R+										10	21								DRIVEWAY 3
"D4" 0+23.00 TO 1+86.16	L+/R+		371	2							21	14								DRIVEWAY 4
"D5" 0+23.00 TO 0+76.94	L+/R+		27	2							11	21								DRIVEWAY 5
"D6" 0+30.00 TO 1+06.53	L+/R+		5	2							20	40								DRIVEWAY 6
"D7" 0+30.00 TO 0+98.24	L+/R+		35	2							21	44								DRIVEWAY 7
"D8" 0+32.80 TO 0+44.39	L+/R+						3				0	14								DRIVEWAY 8
"D9" 0+22.00 TO 0+68.33	L+/R+		45				4				10	19								DRIVEWAY 9
"D10" 0+30.00 TO 0+63.22	L+/R+		115								22	31								DRIVEWAY 10
FROM DRAINAGE Q+y												97								FROM DRAINAGE QUANTITY SHEETS
TOTAL		9494	1,323,628	1,404,425	6,319	303,036	1219	654,246	389	189	22,001	41,278	29.43	675	1027	29*	350	27*	1812*	

* INCLUDED IN DRAINAGE QUANTITIES
(N) - NOT A SEPARATE PAY ITEM, FOR INFORMATION ONLY

SUMMARY OF QUANTITIES

Q-2

STATE OF CALIFORNIA - DEPARTMENT OF TRANSPORTATION
Caltrans DESIGN

SOCORRO URENA — MICHAEL FEAKES — REVISED BY — DATE REVISED
CALCULATED-DESIGNED BY — CHECKED BY
FUNCTIONAL SUPERVISOR — AL TRUJILLO

P:\proj1\02\3E410_plans\pse\23e410pa002.dgn

LAST REVISION 03-04-14 | DATE PLOTTED => 25-AUG-2014 | TIME PLOTTED => 09:25

Dist	COUNTY	ROUTE	POST MILES TOTAL PROJECT	SHEET No.	TOTAL SHEETS
02	Sha	299	0.3/7.1	346	401

REGISTERED CIVIL ENGINEER 03-04-14 DATE

06-09-14
PLANS APPROVAL DATE

REGISTERED PROFESSIONAL ENGINEER SOCORRO V. URENA No. C79633 Exp. 9-30-14 CIVIL STATE OF CALIFORNIA

THE STATE OF CALIFORNIA OR ITS OFFICERS OR AGENTS SHALL NOT BE RESPONSIBLE FOR THE ACCURACY OR COMPLETENESS OF SCANNED COPIES OF THIS PLAN SHEET.

NOTE:

1. (N) - NOT A SEPARATE PAY ITEM, FOR INFORMATION ONLY

PLACE HMA DIKE

STATION	L+/R+	TYPE C	TYPE D	TYPE E	TYPE F
		LF	LF	LF	LF
"M8" 13+57.50 TO 20+12.45	R+				644
"M8" 18+67.00 TO 22+50.00	L+		383		
"M8" 20+12.45 TO 20+74.72	R+	62			
"M8" 20+74.72 TO 22+08.18	R+		133		
"M8" 22+08.18 TO 22+70.46	R+	64			
"M8" 22+70.46 TO 24+60.41	R+				180
"M8" 24+60.41 TO 26+50.00	R+	191			
"M8" 26+50.00 TO 29+78.43	R+				314
"M8" 29+93.00 TO 31+50.34	L+				170
"M8" 31+68.31 TO 51+39.69	L+		1911		
"M8" 36+30.00 TO 38+29.87	R+		195		
"M8" 38+34.04 TO 39+00.00	R+	62			
"M8" 39+00.00 TO 42+92.56	R+				368
"M8" 51+43.00 TO 59+14.65	R+				726
"M8" 58+75.00 TO 61+00.00	L+		246		
"M8" 59+14.65 TO 60+75.00	R+	154			
"M8" 60+75.00 TO 62+19.02	R+				136
"M8" 62+35.00 TO 78+51.97	L+		1536		
"M8" 78+51.97 TO 79+02.90	L+	51			
"M8" 79+02.90 TO 79+58.03	L+				51
"M8" 79+70.25 TO 85+10.72	R+				521
"M8" 84+27.92 TO 86+75.00	L+		276		
"M8" 85+10.72 TO 85+78.09	R+	67			
"M8" 86+06.57 TO 86+73.94	R+	67			
"M8" 86+73.94 TO 91+60.75	R+				533
"M8" 90+55.00 TO 110+27.82	L+		1867		
"M8" 91+60.75 TO 92+31.64	R+	80			
"M8" 92+48.37 TO 93+48.25	R+	109			
"M8" 93+48.25 TO 94+35.03	R+				83
"M8" 108+80.02 TO 109+29.55	R+	50			
"M8" 109+29.55 TO 110+27.82	R+		99		
"M8" 186+25.00 TO 187+18	L+				93
SUBTOTAL 1		957	6646	0	3819

PLACE HMA DIKE (CONTINUED)

STATION	L+/R+	TYPE C	TYPE D	TYPE E	TYPE F
		LF	LF	LF	LF
"M8" 216+65.53 TO 219+92.46	R+			322	
"M8" 220+85.06 TO 221+17.20	R+			37	
"M8" 221+17.20 TO 221+87.94	R+	68			
"M8" 221+87.94 TO 223+60.33	R+				169
"M8" 232+67.00 TO 235+39.56	R+				269
"M8" 235+39.56 TO 236+04.11	R+	63			
"M8" 236+04.11 TO 237+66.97	R+		163		
"M8" 246+25.00 TO 247+08.07	R+	83			
"M8" 247+08.07 TO 249+59.10	R+				245
"M8" 249+59.10 TO 250+21.68	R+	62			
"M8" 250+21.68 TO 252+09.19	R+		188		
"M8" 252+09.19 TO 252+70.84	R+	62			
"M8" 252+70.84 TO 263+60.00	R+				1069
"M8" 271+50.00 TO 278+45.78	R+		681		
"M8" 278+45.78 TO 279+08.06	R+	62			
"M8" 279+08.06 TO 292+76.96	R+				1340
"M8" 296+54.09 TO 300+58.06	R+				395
"M8" 300+58.06 TO 301+25.00	R+	67			
SUBTOTAL 2		467	1032	359	3487
SUBTOTAL 1		957	6646	0	3819
SUBTOTAL (FROM Temp WATER POLLUTION CONTROL Q+y)				21,120	
TOTAL		1424	7678	21,479	7306

SUMMARY OF QUANTITIES
Q-3

REVISED BY | DATE REVISED
SOCORRO URENA | MICHAEL FEAKES
CALCULATED-DESIGNED BY | CHECKED BY
FUNCTIONAL SUPERVISOR | AL TRUJILLO

STATE OF CALIFORNIA - DEPARTMENT OF TRANSPORTATION
Caltrans DESIGN

P:\proj1\02\3E410_plans\pse\23e410pa003.dgn

LAST REVISION 03-04-14 | DATE PLOTTED => 25-AUG-2014 | TIME PLOTTED => 09:25

Dist	COUNTY	ROUTE	POST MILES TOTAL PROJECT	SHEET No.	TOTAL SHEETS
02	Sha	299	0.3/7.1	347	401

REGISTERED CIVIL ENGINEER 03-04-14 DATE

06-09-14
PLANS APPROVAL DATE

REGISTERED PROFESSIONAL ENGINEER SOCORRO V. URENA No. C79633 Exp. 9-30-14 CIVIL STATE OF CALIFORNIA

THE STATE OF CALIFORNIA OR ITS OFFICERS OR AGENTS SHALL NOT BE RESPONSIBLE FOR THE ACCURACY OR COMPLETENESS OF SCANNED COPIES OF THIS PLAN SHEET.

NOTE:

1. (N) - NOT A SEPARATE PAY ITEM, FOR INFORMATION ONLY

METAL BEAM GUARD RAILING

STATION	Lt/Rt	TREATED WOOD WASTE	REMOVE GUARDRAIL	REMOVE GUARDRAIL (SPECIAL)	RESET GUARDRAIL (STEEL POST)	RESET TERMINAL SYSTEM	RESET INTERMEDIATE ANCHOR ASSEMBLY (MODIFIED TYPE SFT)	RESET END ANCHOR ASSEMBLY (TYPE SFT)	METAL BEAM GUARD RAILING (STEEL POST)	METAL BEAM GUARD RAILING (7' STEEL POST)	TRANSITION RAILING (TYPE WB)	END ANCHOR ASSEMBLY (TYPE SFT)	INTERMEDIATE ANCHOR ASSEMBLY (Mod TYPE SFT)	AI+ IN-LINE TERMINAL SYSTEM	AI+ FLARED TERMINAL SYSTEM
		LB	LF	LF	LF	EA	EA	EA	LF	LF	EA	EA	EA	EA	EA
"M8" 13+18.29 TO 13+57.50	Rt														1
"M8" 13+29.96 TO 20+60.19	Rt	9355	725												
"M8" 13+57.50 TO 20+49.65	Rt								687						
"M8" 20+49.65	Rt											1			
"M8" 22+33.17 TO 22+70.46	Rt														1
"M8" 22+70.46 TO 24+99.09	Rt								224						
"M8" 24+99.09	Rt											1			
"M8" 26+11.31 TO 26+50.00	Rt														1
"M8" 26+15.50	Lt											1			
"M8" 26+15.50 TO 31+50.27	Lt								544						
"M8" 26+50.00 TO 33+81.37	Rt								738						
"M8" 31+23.83	Lt												1		
"M8" 31+50.27	Lt											1			
"M8" 33+81.37	Rt											1			
"M8" 38+60.37 TO 39+00.00	Rt														1
"M8" 39+00.00 TO 45+66.72	Rt								662						
"M8" 45+66.72	Rt											1			
"M8" 46+53.50 TO 48+36.25	Rt	2903	225												
"M8" 49+70.63 TO 50+17.25	Rt													1	
"M8" 49+93.95 TO 51+82.32	Lt/Rt	2903	225												
"M8" 50+17.25 TO 59+14.65	Rt								862						
"M8" 51+47.04	Lt											1			
"M8" 51+47.04 TO 57+24.09	Lt								612						
"M8" 57+24.09 TO 57+70.51	Lt													1	
"M8" 59+14.65	Rt											1			
"M8" 60+37.70 TO 60+75.00	Rt														1
"M8" 60+75.00 TO 64+37.49	Rt								362						
"M8" 64+37.49	Rt											1			
"M8" 67+84.49 TO 68+30.53	Rt													1	
"M8" 68+30.53 TO 70+02.66	Rt								175						
"M8" 70+02.66	Rt											1			
"M8" 72+37.70 TO 72+75.00	Rt														1
"M8" 72+75.00 TO 74+98.49	Rt								225						
"M8" 74+98.49	Rt											1			
"M8" 77+47.50 TO 77+95.80	Rt													1	
"M8" 77+95.80 TO 85+49.79	Rt								737						
"M8" 78+20.00 TO 79+40.57	Lt/Rt	2581	200												
"M8" 79+02.90	Lt											1			
"M8" 79+02.90 TO 83+91.93	Lt								512						
"M8" 83+71.88	Lt												1		
SUBTOTAL		17,742	1375	0	0	0	0	0	6340	0	0	12	2	4	6

SUMMARY OF QUANTITIES

Q-4

REVISED BY | DATE REVISED

SOCORRO URENA | MICHAEL FEAKES

CALCULATED-DESIGNED BY | CHECKED BY

FUNCTIONAL SUPERVISOR: AL TRUJILLO

STATE OF CALIFORNIA - DEPARTMENT OF TRANSPORTATION

Caltrans DESIGN

P:\proj1\02\3E410_plans\pse\23e410pa004.dgn

LAST REVISION 03-04-14 | DATE PLOTTED => 25-AUG-2014 | TIME PLOTTED => 09:25

Dist	COUNTY	ROUTE	POST MILES TOTAL PROJECT	SHEET No.	TOTAL SHEETS
02	Sha	299	0.3/7.1	348	401

REGISTERED CIVIL ENGINEER 03-04-14 DATE

06-09-14
PLANS APPROVAL DATE

REGISTERED PROFESSIONAL ENGINEER SOCORRO V. URENA No. C79633 Exp. 9-30-14 CIVIL STATE OF CALIFORNIA

THE STATE OF CALIFORNIA OR ITS OFFICERS OR AGENTS SHALL NOT BE RESPONSIBLE FOR THE ACCURACY OR COMPLETENESS OF SCANNED COPIES OF THIS PLAN SHEET.

NOTE:

1. (N) - NOT A SEPARATE PAY ITEM, FOR INFORMATION ONLY

METAL BEAM GUARD RAILING

STATION	Lt/Rt	TREATED WOOD WASTE	REMOVE GUARDRAIL	REMOVE GUARDRAIL (SPECIAL)	RESET GUARDRAIL (STEEL POST)	RESET TERMINAL SYSTEM	RESET INTERMEDIATE ANCHOR ASSEMBLY (MODIFIED TYPE SFT)	RESET END ANCHOR ASSEMBLY (TYPE SFT)	METAL BEAM GUARD RAILING (STEEL POST)	METAL BEAM GAURD RAILING (7' STEEL POST)	TRANSITION RAILING (TYPE WB)	END ANCHOR ASSEMBLY (TYPE SFT)	INTERMEDIATE ANCHOR ASSEMBLY (Mod TYPE SFT)	At IN-LINE TERMINAL SYSTEM	At FLARED TERMINAL SYSTEM
		LB	LF	LF	LF	EA	EA	EA	LF	LF	EA	EA	EA	EA	EA
"M8" 83+91.93	Lt											1			
"M8" 85+49.79	Rt											1			
"M8" 86+34.87 TO 86+73.94	Rt														1
"M8" 86+73.94 TO 91+60.75	Rt								475						
"M8" 91+60.75	Rt											1			
"M8" 93+10.96 TO 93+48.25	Rt														1
"M8" 93+48.25 TO 97+89.86	Rt								450						
"M8" 97+89.86	Rt											1			
"M8" 98+79.41 TO 102+52.24		6723	521.0												
"M8" 103+64.84 TO 108+75.76	Rt	484	562.5												
"M8" 104+46.91 TO 104+93.18	Rt													1	
"M8" 104+93.18 TO 108+70.63	Rt									387.5					
"M8" 108+70.63	Rt											1			
"M8" 176+20.00 TO 176+95.00	Lt	484	75.0												
"M8" 186+40.53 TO 187+28.03	Lt				87.5										
"M8" 193+49.38	Lt							1							
"M8" 193+49.38 TO 197+63.53	Lt				487.5										
"M8" 193+90.64	Lt						1								
"M8" 197+63.53 TO 197+99.06	Lt					1									
"M8" 221+46.07 TO 221+95.96	Rt													1	
"M8" 221+95.96 TO 226+53.41	Rt								462						
"M8" 222+13.04 TO 226+46.97	Rt	484	450.0												
"M8" 226+53.41	Rt											1			
"M8" 229+82.15 TO 230+28.25	Rt													1	
"M8" 230+28.25 TO 235+77.64	Rt								519						
"M8" 230+49.41 TO 230+79.59	Rt	484	31.3												
"M8" 230+79.59 TO 231+83.78	Rt			106.3											
"M8" 231+83.78 TO 232+21.19	Rt	484	37.5												
"M8" 233+47.87 TO 233+85.77	Rt	484	37.5												
"M8" 233+85.77 TO 234+88.18	Rt			100.0											
"M8" 234+88.18 TO 235+27.21	Rt	484	37.5												
"M8" 235+77.64	Rt											1			
"M8" 238+20.78 TO 238+58.06	Rt														1
"M8" 238+58.06 TO 243+18.17	Rt								463						
"M8" 243+18.17	Rt											1			
"M8" 246+70.78 TO 247+08.07	Rt														1
"M8" 247+08.07 TO 249+96.57	Rt								287						
"M8" 249+96.57	Rt											1			
"M8" 252+34.18 TO 252+70.84	Rt														1
"M8" 252+70.84 TO 263+35.61	Rt								1050						
"M8" 262+71.92	Lt											1			
"M8" 262+71.92 TO 264+18.00	Lt								156						
"M8" 263+35.61 TO 263+61.18	Rt										1				
"M8" 263+93.00	Lt												1		
SUBTOTAL		10,111	1752.3	206.3	575	1	1	1	3862	387.5	1	10	1	3	5

SUMMARY OF QUANTITIES Q-5

REVISED BY | DATE REVISED

SOCORRO URENA | MICHAEL FEAKES

CALCULATED-DESIGNED BY | CHECKED BY

FUNCTIONAL SUPERVISOR: AL TRUJILLO

STATE OF CALIFORNIA - DEPARTMENT OF TRANSPORTATION

Caltrans® DESIGN

P:\proj\02\3E410_plans\pse\23e410pa005.dgn

LAST REVISION 03-04-14 | DATE PLOTTED => 25-AUG-2014 | TIME PLOTTED => 09:25

Dist	COUNTY	ROUTE	POST MILES TOTAL PROJECT	SHEET No.	TOTAL SHEETS
02	Sha	299	0.3/7.1	349	401

REGISTERED CIVIL ENGINEER 03-04-14 DATE

06-09-14
PLANS APPROVAL DATE

REGISTERED PROFESSIONAL ENGINEER SOCORRO V. URENA No. C79633 Exp. 9-30-14 CIVIL STATE OF CALIFORNIA

THE STATE OF CALIFORNIA OR ITS OFFICERS OR AGENTS SHALL NOT BE RESPONSIBLE FOR THE ACCURACY OR COMPLETENESS OF SCANNED COPIES OF THIS PLAN SHEET.

NOTES:

1. (N) - NOT A SEPARATE PAY ITEM, FOR INFORMATION ONLY
2. * ALL QUANITIES ARE PROVIDED FOR INFORMATIONAL PURPOSES ONLY AND DO NOT REPRESENT BID QUANTITIES.
3. SEE STANDARD PROVISIONS OR SPECIAL INSTRUCTIONS.

METAL BEAM GUARD RAILING

STATION	L+/R+	TREATED WOOD WASTE	REMOVE GUARDRAIL	REMOVE GUARDRAIL (SPECIAL)	RESET GUARDRAIL (STEEL POST)	RESET TERMINAL SYSTEM	RESET INTERMEDIATE ANCHOR ASSEMBLY (MODIFIED TYPE SFT)	RESET END ANCHOR ASSEMBLY (TYPE SFT)	METAL BEAM GUARD RAILING (STEEL POST)	METAL BEAM GUARD RAILING (7' STEEL POST)	TRANSITION RAILING (TYPE WB)	END ANCHOR ASSEMBLY (TYPE SFT)	INTERMEDIATE ANCHOR ASSEMBLY (Mod TYPE SFT)	A1+ IN-LINE TERMINAL SYSTEM	A1+ FLARED TERMINAL SYSTEM
		LB	LF	LF	LF	EA	EA	EA	LF	LF	EA	EA	EA	EA	EA
"M8" 264+18.00	L+											1			
"M8" 265+58.88 TO 266+21.16	R+								62						
"M8" 266+21.16	R+											1			
"M8" 278+70.78 TO 279+08.06	R+														1
"M8" 279+08.06 TO 293+17.09	R+								1370						
"M8" 293+17.09	R+											1			
"M8" 296+16.84 TO 296+54.09	R+														1
"M8" 296+54.09 TO 300+95.36	R+								437						
"M8" 300+95.36	R+											1			
SUBTOTAL THIS SHEET		0	0	0	0	0	0	0	1869	0	0	4	0	0	2
SUBTOTAL Q-4		17,742	1375.0	0	0	0	0	0	6340	0	0	12	2	4	6
SUBTOTAL Q-5		10,111	1752.3	206.3	575	1	1	1	3862	387.5	1	10	1	3	5
TOTAL		27,853	3127.3	206.3	575	1	1	1	12,071	387.5	1	26	3	7	13

TEMPORARY FENCE (TYPE ESA)

STATION	L+/R+	Temp FENCE (TYPE ESA)
		LF
"M8" 23+33.36 TO 23+83.36	R+	50
"M8" 27+51.72 TO 28+03.47	L+	91
"M8" 31+40.28 TO 31+60.00	R+	50
"M8" 36+31.74 TO 36+81.71	R+	50
"M8" 40+00.87 TO 40+65.69	R+	50
"M8" 44+64.86 TO 44+97.00	R+	50
"M8" 53+24.14 TO 53+45.95	L+	50
"M8" 54+16.74 TO 54+36.65	L+	50
"M8" 54+84.60 TO 55+28.17	R+	50
"M8" 62+35.23 TO 62+85.36	R+	50
"M8" 80+57.27 TO 81+37.25	R+	80
"M8" 90+62.65 TO 91+25.54	R+	80
"M8" 95+84.96 TO 96+31.38	R+	50
"M8" 239+12.11 TO 239+60.49	R+	50
"M8" 239+16.43 TO 239+67.92	L+	50
"M8" 248+72.14 TO 249+23.26	R+	50
"M8" 248+74.02 TO 249+23.37	L+	50
"M8" 260+50.93 TO 263+98.78	L+	382
"M8" 263+61.05 TO 265+81.26	R+	230
"M8" 264+55	L+	20
"M8" 272+72.17 TO 273+18.41	L+	50
"M8" 272+73.20 TO 273+27.70	R+	50
"M8" 274+67.49 TO 275+13.52	L+	50
"M8" 275+29.40 TO 276+07.01	R+	75
"M8" 281+53.79 TO 282+03.76	R+	50
"M8" 281+56.38 TO 282+06.37	L+	50
"M8" 284+00.11 TO 288+00.00	L+	483
"M8" 285+72.87 TO 286+60.15	R+	80
"M8" 292+02.52 TO 292+47.32	L+	50
"M8" 292+14.05 TO 292+90.72	R+	80
"M8" 297+00.00 TO 300+50.00	R+	332
"M8" 186+73.66 TO 201+74.40 (LARGE AREA)	R+	952
"M8" 198+97.50 TO 200+09.19 (SMALL AREA)	R+	255
TOTAL		4140

SUMMARY OF QUANTITIES
Q-6

REVISED BY | DATE REVISED
SOCORRO URENA | MICHAEL FEAKES
CALCULATED-DESIGNED BY | CHECKED BY
FUNCTIONAL SUPERVISOR
AL TRUJILLO

STATE OF CALIFORNIA - DEPARTMENT OF TRANSPORTATION
Caltrans
DESIGN

P:\proj1\02\3E410_plans\pse\23e410pa006.dgn

LAST REVISION 03-04-14 | DATE PLOTTED => 25-AUG-2014 | TIME PLOTTED => 09:25

Dist	COUNTY	ROUTE	POST MILES TOTAL PROJECT	SHEET No.	TOTAL SHEETS
02	Sha	299	0.3/7.1	350	401

REGISTERED CIVIL ENGINEER 03-04-14 DATE

06-09-14
PLANS APPROVAL DATE

REGISTERED PROFESSIONAL ENGINEER SOCORRO V. URENA No. C79633 Exp. 9-30-14 CIVIL STATE OF CALIFORNIA

THE STATE OF CALIFORNIA OR ITS OFFICERS OR AGENTS SHALL NOT BE RESPONSIBLE FOR THE ACCURACY OR COMPLETENESS OF SCANNED COPIES OF THIS PLAN SHEET.

NOTES:

1. (N) - NOT A SEPARATE PAY ITEM, FOR INFORMATION ONLY
2. SMALL-ROCK SLOPE PROTECTION SHALL BE 7" THICK.

TEMPORARY WATER POLLUTION CONTROL

STATION	Temp COVER	PLACE HOT MIX ASPHALT DIKE (TYPE E)	SMALL-ROCK SLOPE PROTECTION	Temp DRAINAGE INLET PROTECTION	Temp SEDIMENT TRAP	Temp TACKED STRAW	Temp HYDRAULIC MULCH (BONDED FIBER MATRIX)	Temp FIBER ROLL	Temp CHECK DAM	MOVE IN/MOVE OUT (TEMPORARY EROSION CONTROL)
"M8" 17+50 TO 301+25	SQYD	LF	CY	EA	EA	SQYD	SQYD	LF	LF	EA
STORM WATER BMP'S	14,967	21,120*	450	10	5	70,333	314,000	8000	3000	20
EROSION CONTROL ESTABLISHMENT WORK						11,111	157,000	4000	1500	10
TOTAL	14,967	21,120*	450	10	5	81,444	471,000	12,000	4,500	30

* INCLUDED IN HMA DIKE QUANTITY TABLE

VEGETATION CONTROL (MINOR CONCRETE)

STATION	L+/R+	VEGETATION CONTROL (MINOR CONCRETE) SQYD
"M8" 13+00.82 TO 20+77.71	R+	285.17
"M8" 22+05.17 TO 25+16.47	R+	129.25
"M8" 25+94.14 TO 33+92.13	R+	376.02
"M8" 25+98.94 TO 31+45.94	L+	284.42
"M8" 38+43.03 TO 45+82.42	R+	324.84
"M8" 49+51.66 TO 59+27.18	R+	356.19
"M8" 51+43.55 TO 57+88.80	L+	373.58
"M8" 60+20.53 TO 64+50.78	R+	203.14
"M8" 67+75.51 TO 70+16.27	R+	140.81
"M8" 72+19.00 TO 75+13.27	R+	174.60
"M8" 77+32.15 TO 85+66.09	R+	336.91
"M8" 78+98.54 TO 83+88.71	L+	274.60
"M8" 86+18.52 TO 91+70.74	R+	191.85
"M8" 92+94.52 TO 98+07.43	R+	275.93
"M8" 104+26.27 TO 108+80.02	R+	254.65
"M8" 186+25.00 TO 187+28.03	L+	35.72
"M8" 193+51.70 TO 198+00.00	L+	282.34
"M8" 221+30.08 TO 226+62.96	R+	240.30
"M8" 229+73.16 TO 235+94.74	R+	277.83
"M8" 238+03.18 TO 243+35.76	R+	254.42
"M8" 246+53.85 TO 250+13.51	R+	154.04
"M8" 252+17.26 TO 263+60.00	R+	388.56
"M8" 262+55.96 TO 264+11.98	L+	103.67
"M8" 265+60.00 TO 266+38.75	R+	47.53
"M8" 278+53.85 TO 293+34.68	R+	546.70
"M8" 295+99.34 TO 301+08.00	R+	193.82
TOTAL		6506.89

SUMMARY OF QUANTITIES
Q-7

REVISED BY | DATE REVISED
SOCORRO URENA | MICHAEL FEAKES
CALCULATED-DESIGNED BY | CHECKED BY
FUNCTIONAL SUPERVISOR
AL TRUJILLO

STATE OF CALIFORNIA - DEPARTMENT OF TRANSPORTATION
Caltrans DESIGN

P:\proj1\02\3E410_plans\pse\23e410pa007.dgn

LAST REVISION 03-04-14 | DATE PLOTTED => 25-AUG-2014 TIME PLOTTED => 09:25

Dist	COUNTY	ROUTE	POST MILES TOTAL PROJECT	SHEET No.	TOTAL SHEETS
02	Sha	299	0.3/7.1	351	401

LICENSED LANDSCAPE ARCHITECT

06-09-14

PLANS APPROVAL DATE

LICENSED LANDSCAPE ARCHITECT J. PATRICK SULLIVAN #3125 Signature 07/31/14 Renewal Date 03/05/14 Date STATE OF CALIFORNIA

THE STATE OF CALIFORNIA OR ITS OFFICERS OR AGENTS SHALL NOT BE RESPONSIBLE FOR THE ACCURACY OR COMPLETENESS OF SCANNED COPIES OF THIS PLAN SHEET.

NOTE:

1. FOR ACCURATE RIGHT OF WAY DATA, CONTACT RIGHT OF WAY ENGINEERING AT THE DISTRICT OFFICE.

LEGEND

- WOOD MULCH
- HYDROSEED
- EROSION CONTROL

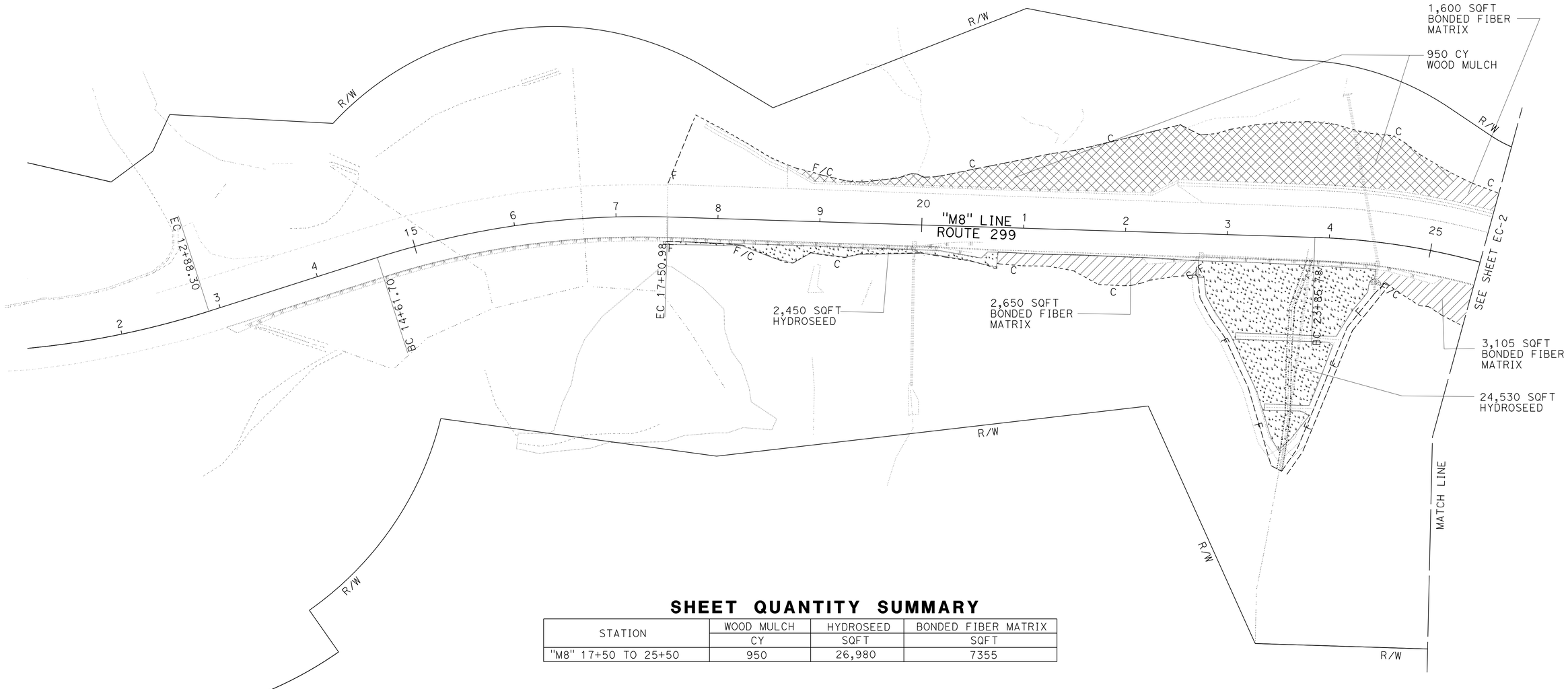

SHEET QUANTITY SUMMARY

STATION	WOOD MULCH	HYDROSEED	BONDED FIBER MATRIX
	CY	SQFT	SQFT
"M8" 17+50 TO 25+50	950	26,980	7355

EROSION CONTROL PLAN

SCALE: 1" = 50'

EC-1

APPROVED FOR EROSION CONTROL ONLY

REVISED BY | DATE REVISED

J. PATRICK SULLIVAN | RON FLORY

CALCULATED-DESIGNED BY | CHECKED BY

SENIOR LANDSCAPE ARCHITECT | RON FLORY

STATE OF CALIFORNIA - DEPARTMENT OF TRANSPORTATION

Caltrans® LANDSCAPE ARCHITECTURE

P:\proj1\02\3E410\plans\pse\23e410te001.dgn

LAST REVISION 03-05-14 | DATE PLOTTED => 25-AUG-2014 TIME PLOTTED => 09:25

Dist	COUNTY	ROUTE	POST MILES TOTAL PROJECT	SHEET No.	TOTAL SHEETS
02	Sha	299	0.3/7.1	352	401

LICENSED LANDSCAPE ARCHITECT

06-09-14

PLANS APPROVAL DATE

LICENSED LANDSCAPE ARCHITECT J. PATRICK SULLIVAN #3125 Signature 07/31/14 Renewal Date 03/05/14 Date STATE OF CALIFORNIA

THE STATE OF CALIFORNIA OR ITS OFFICERS OR AGENTS SHALL NOT BE RESPONSIBLE FOR THE ACCURACY OR COMPLETENESS OF SCANNED COPIES OF THIS PLAN SHEET.

NOTE:

1. FOR ACCURATE RIGHT OF WAY DATA, CONTACT RIGHT OF WAY ENGINEERING AT THE DISTRICT OFFICE.

SHEET QUANTITY SUMMARY

STATION	WOOD MULCH	HYDROSEED	BONDED FIBER MATRIX
	CY	SQFT	SQFT
"M8" 25+50 TO 35+50	99	248,770	24,780

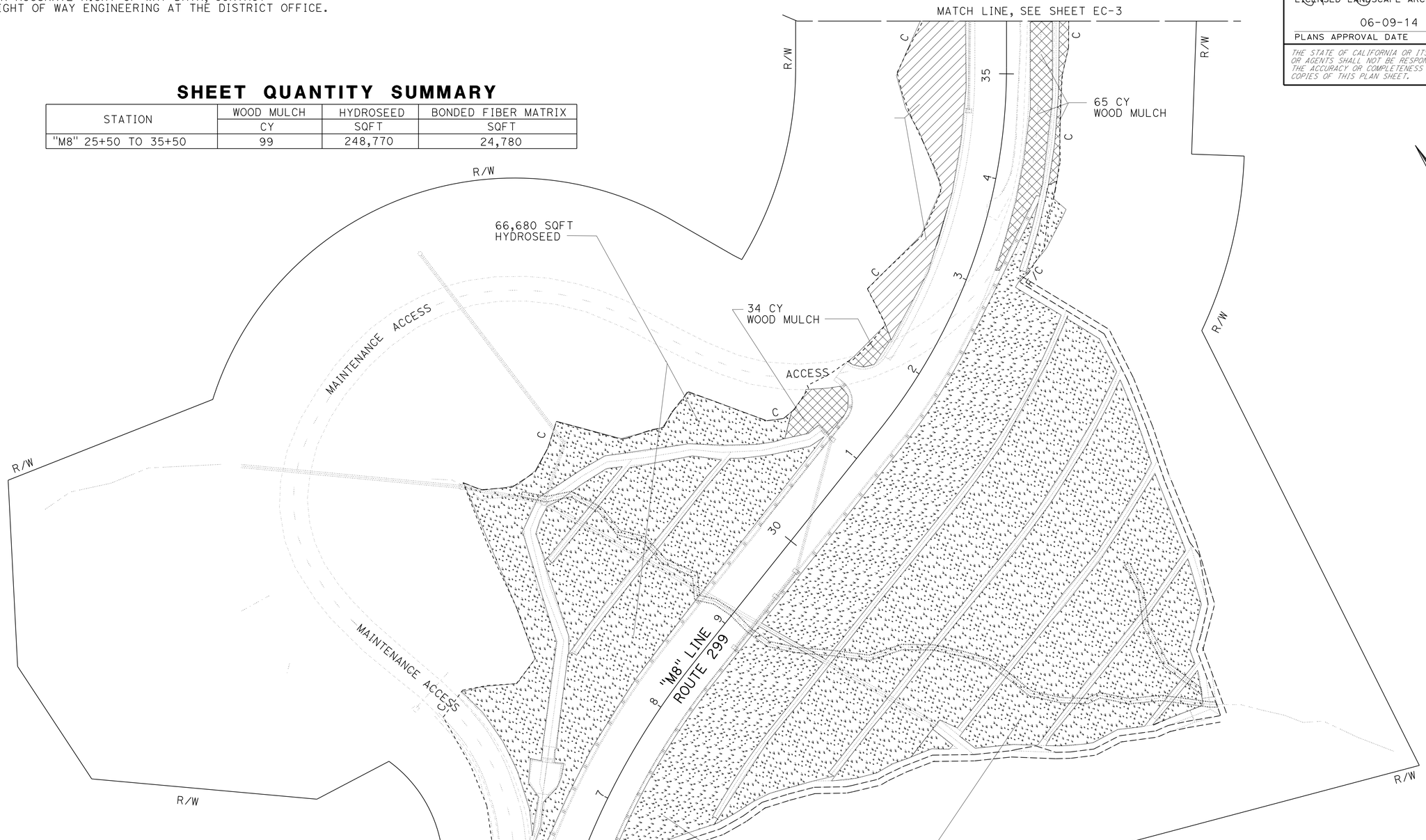

EROSION CONTROL PLAN

SCALE: 1" = 50'

EC-2

APPROVED FOR EROSION CONTROL WORK ONLY

STATE OF CALIFORNIA - DEPARTMENT OF TRANSPORTATION

Caltrans® LANDSCAPE ARCHITECTURE

SENIOR LANDSCAPE ARCHITECT: RON FLORY

J. PATRICK SULLIVAN

CALCULATED-DESIGNED BY

CHECKED BY: RON FLORY

REVISED BY

DATE REVISED

P:\proj1\02\3E410\ plans\pse\23e410te002.dgn

LAST REVISION 03-05-14 | DATE PLOTTED => 25-AUG-2014 | TIME PLOTTED => 09:25

BORDER LAST REVISED 7/2/2010 | USERNAME => s115152 | DGN FILE => 23e410te002.dgn | RELATIVE BORDER SCALE IS IN INCHES 0 1 2 3 | UNIT 0383 | PROJECT NUMBER & PHASE 02-0002-0042-1 | EA 02-3E410

Dist	COUNTY	ROUTE	POST MILES TOTAL PROJECT	SHEET No.	TOTAL SHEETS
02	Sha	299	0.3/7.1	353	401

LICENSED LANDSCAPE ARCHITECT

06-09-14

PLANS APPROVAL DATE

LICENSED LANDSCAPE ARCHITECT J. PATRICK SULLIVAN #3125 Signature 07/31/14 Renewal Date 03/05/14 Date STATE OF CALIFORNIA

THE STATE OF CALIFORNIA OR ITS OFFICERS OR AGENTS SHALL NOT BE RESPONSIBLE FOR THE ACCURACY OR COMPLETENESS OF SCANNED COPIES OF THIS PLAN SHEET.

NOTE:

1. FOR ACCURATE RIGHT OF WAY DATA, CONTACT RIGHT OF WAY ENGINEERING AT THE DISTRICT OFFICE.

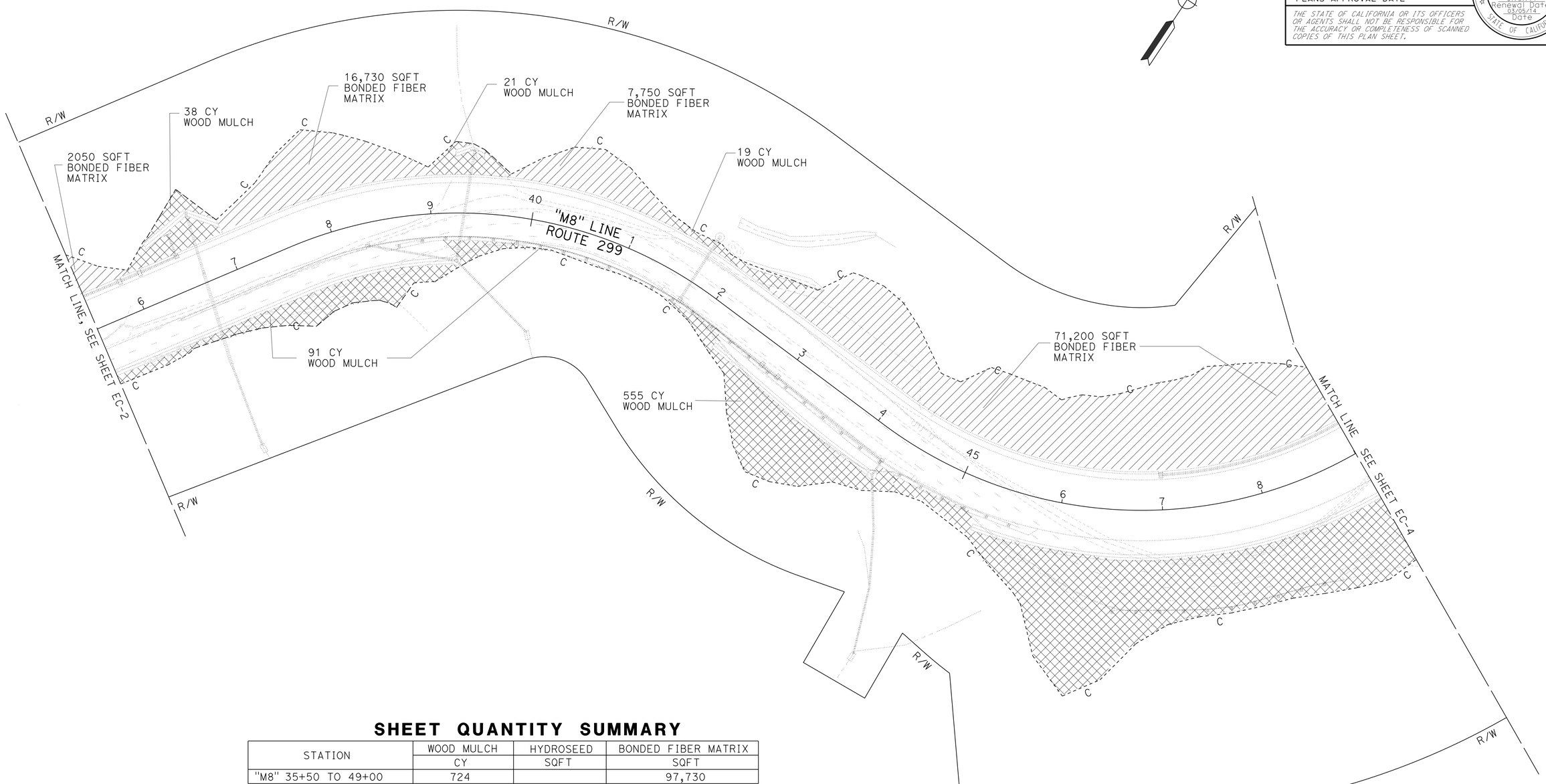

SHEET QUANTITY SUMMARY

STATION	WOOD MULCH	HYDROSEED	BONDED FIBER MATRIX
	CY	SQFT	SQFT
"M8" 35+50 TO 49+00	724		97,730

EROSION CONTROL PLAN

SCALE: 1" = 50'

EC-3

APPROVED FOR EROSION CONTROL WORK ONLY

STATE OF CALIFORNIA - DEPARTMENT OF TRANSPORTATION
Caltrans® LANDSCAPE ARCHITECTURE

SENIOR LANDSCAPE ARCHITECT: RON FLORY
J. PATRICK SULLIVAN — RON FLORY
CALCULATED-DESIGNED BY / CHECKED BY
REVISED BY / DATE REVISED

P:\proj1\02\3E410\ plans\ase\23e410te003.dgn

LAST REVISION 03-05-14 | DATE PLOTTED => 25-AUG-2014 | TIME PLOTTED => 09:25

BORDER LAST REVISED 7/2/2010 | USERNAME => s115152 | DGN FILE => 23e410te003.dgn | RELATIVE BORDER SCALE IS IN INCHES 0 1 2 3 | UNIT 0383 | PROJECT NUMBER & PHASE 02-0002-0042-1 | EA 02-3E410

Dist	COUNTY	ROUTE	POST MILES TOTAL PROJECT	SHEET No.	TOTAL SHEETS
02	Sha	299	0.3/7.1	354	401

LICENSED LANDSCAPE ARCHITECT

06-09-14

PLANS APPROVAL DATE

LICENSED LANDSCAPE ARCHITECT J. PATRICK SULLIVAN #3125 Signature 07/31/14 Renewal Date 03/05/14 Date STATE OF CALIFORNIA

THE STATE OF CALIFORNIA OR ITS OFFICERS OR AGENTS SHALL NOT BE RESPONSIBLE FOR THE ACCURACY OR COMPLETENESS OF SCANNED COPIES OF THIS PLAN SHEET.

NOTE:

1. FOR ACCURATE RIGHT OF WAY DATA, CONTACT RIGHT OF WAY ENGINEERING AT THE DISTRICT OFFICE.

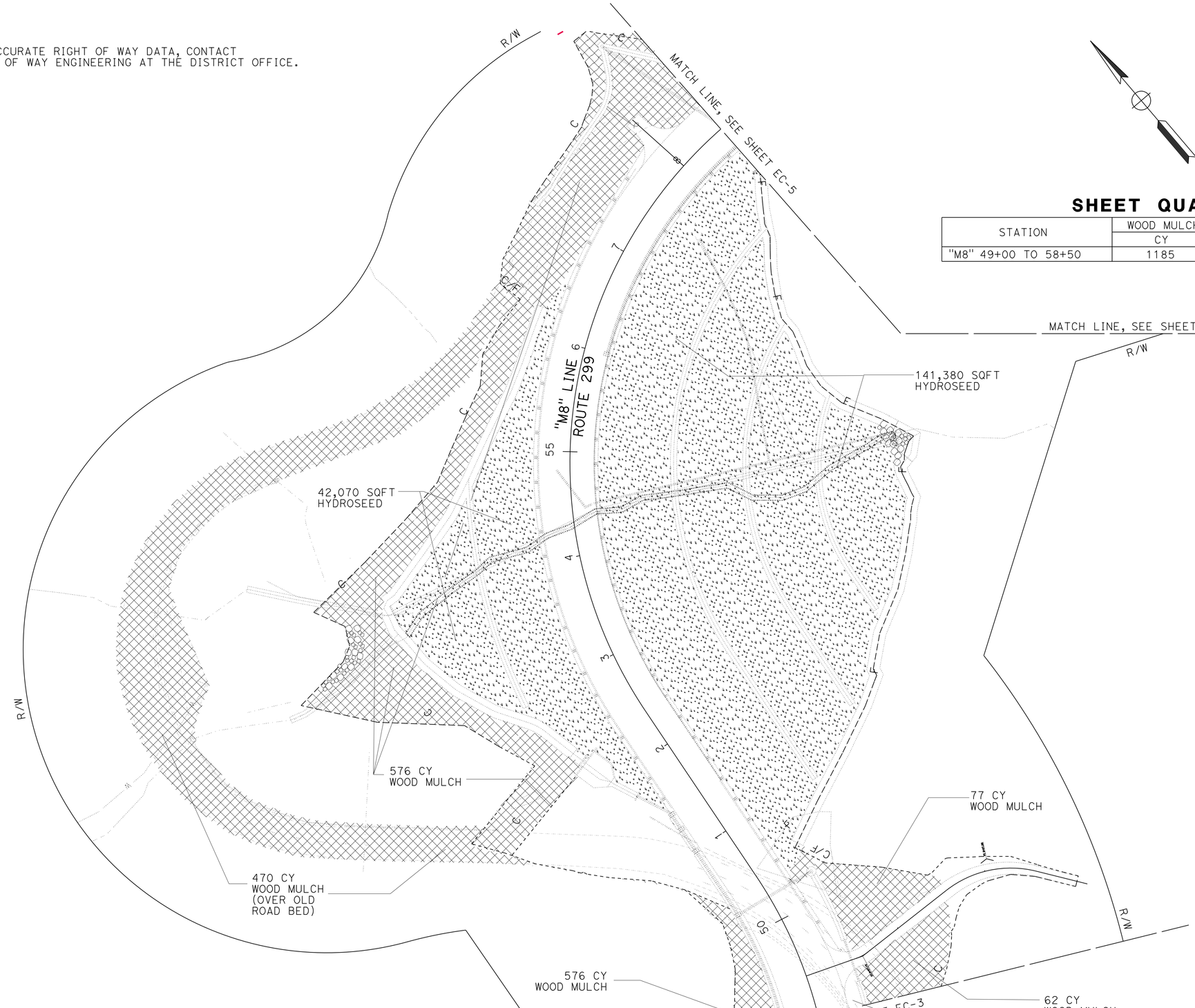

SHEET QUANTITY SUMMARY

STATION	WOOD MULCH	HYDROSEED	BONDED FIBER MATRIX
	CY	SQFT	SQFT
"M8" 49+00 TO 58+50	1185	183,450	

APPROVED FOR EROSION CONTROL WORK ONLY

EROSION CONTROL PLAN

SCALE: 1" = 50'

EC-4

REVISED BY | DATE REVISED

J. PATRICK SULLIVAN | RON FLORY

CALCULATED-DESIGNED BY | CHECKED BY

SENIOR LANDSCAPE ARCHITECT | RON FLORY

STATE OF CALIFORNIA - DEPARTMENT OF TRANSPORTATION

Caltrans® LANDSCAPE ARCHITECTURE

P:\proj\02\3E410\ plans\pse\23e410te004.dgn

LAST REVISION 03-05-14 | DATE PLOTTED => 25-AUG-2014 | TIME PLOTTED => 09:25

Dist	COUNTY	ROUTE	POST MILES TOTAL PROJECT	SHEET No.	TOTAL SHEETS
02	Sha	299	0.3/7.1	355	401

LICENSED LANDSCAPE ARCHITECT

06-09-14

PLANS APPROVAL DATE

LICENSED LANDSCAPE ARCHITECT J. PATRICK SULLIVAN #3125 Signature 07/31/14 Renewal Date 03/05/14 Date STATE OF CALIFORNIA

THE STATE OF CALIFORNIA OR ITS OFFICERS OR AGENTS SHALL NOT BE RESPONSIBLE FOR THE ACCURACY OR COMPLETENESS OF SCANNED COPIES OF THIS PLAN SHEET.

NOTE:

1. FOR ACCURATE RIGHT OF WAY DATA, CONTACT RIGHT OF WAY ENGINEERING AT THE DISTRICT OFFICE.

SHEET QUANTITY SUMMARY

STATION	WOOD MULCH	HYDROSEED	BONDED FIBER MATRIX
	CY	SQFT	SQFT
"M8" 58+50 TO 72+50	1122	33,036	105,670

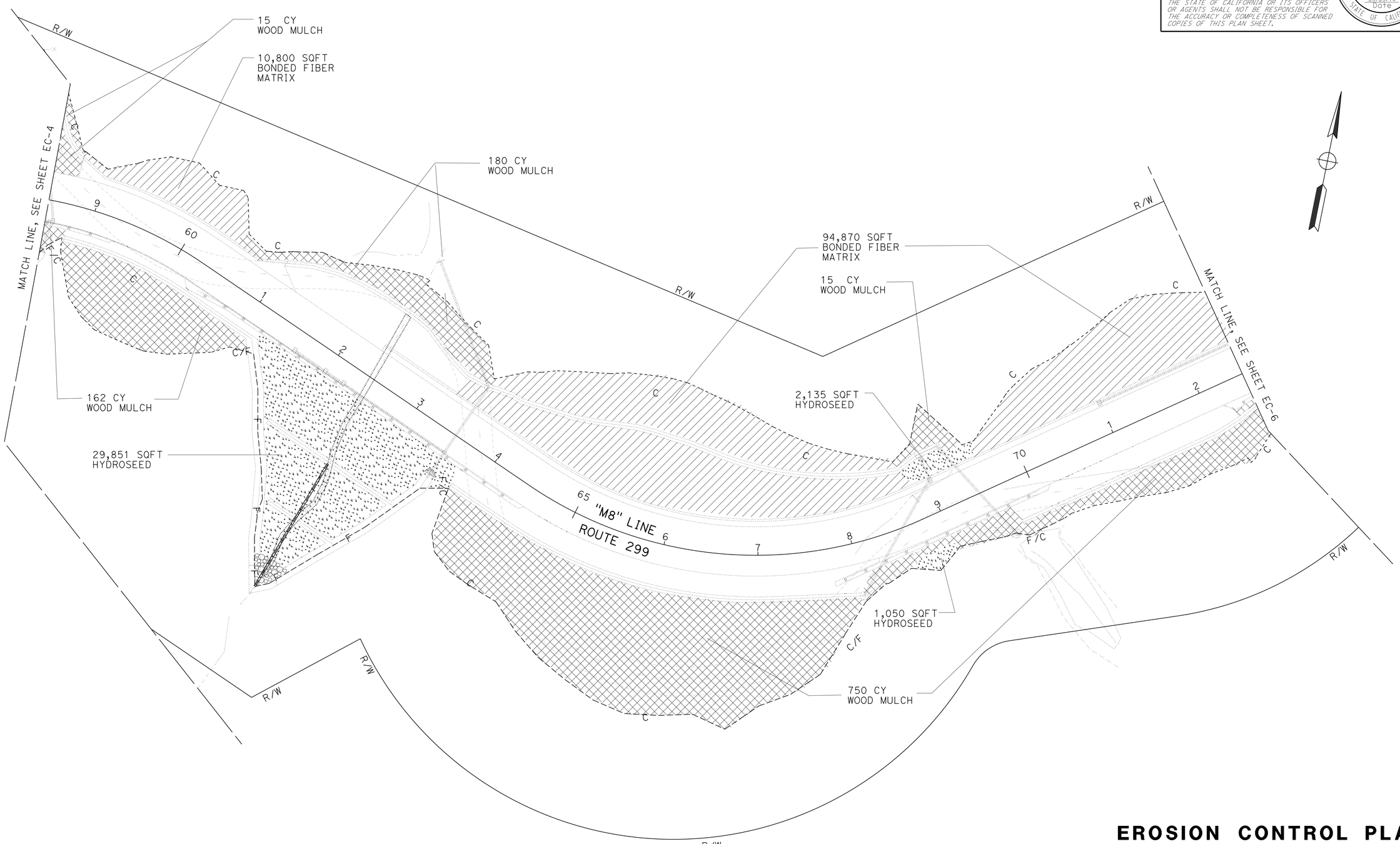

APPROVED FOR EROSION CONTROL ONLY

EROSION CONTROL PLAN

SCALE: 1" = 50'

EC-5

STATE OF CALIFORNIA - DEPARTMENT OF TRANSPORTATION

Caltrans® LANDSCAPE ARCHITECTURE

SENIOR LANDSCAPE ARCHITECT: RON FLORY

CALCULATED-DESIGNED BY: J. PATRICK SULLIVAN

CHECKED BY: RON FLORY

REVISED BY / DATE REVISED

P:\proj\02\3E410\ plans\pse\23e410te005.dgn

LAST REVISION 03-05-14 | DATE PLOTTED => 25-AUG-2014 | TIME PLOTTED => 09:25

BORDER LAST REVISED 7/2/2010 | USERNAME => s115152 | DGN FILE => 23e410te005.dgn | RELATIVE BORDER SCALE IS IN INCHES 0 1 2 3 | UNIT 0383 | PROJECT NUMBER & PHASE 02-0002-0042-1 | EA 02-3E410

Dist	COUNTY	ROUTE	POST MILES TOTAL PROJECT	SHEET No.	TOTAL SHEETS
02	Sha	299	0.3/7.1	356	401

LICENSED LANDSCAPE ARCHITECT

06-09-14

PLANS APPROVAL DATE

LICENSED LANDSCAPE ARCHITECT J. PATRICK SULLIVAN #3125 Signature 07/31/14 Renewal Date 03/05/14 Date STATE OF CALIFORNIA

THE STATE OF CALIFORNIA OR ITS OFFICERS OR AGENTS SHALL NOT BE RESPONSIBLE FOR THE ACCURACY OR COMPLETENESS OF SCANNED COPIES OF THIS PLAN SHEET.

NOTE:

1. FOR ACCURATE RIGHT OF WAY DATA, CONTACT RIGHT OF WAY ENGINEERING AT THE DISTRICT OFFICE.

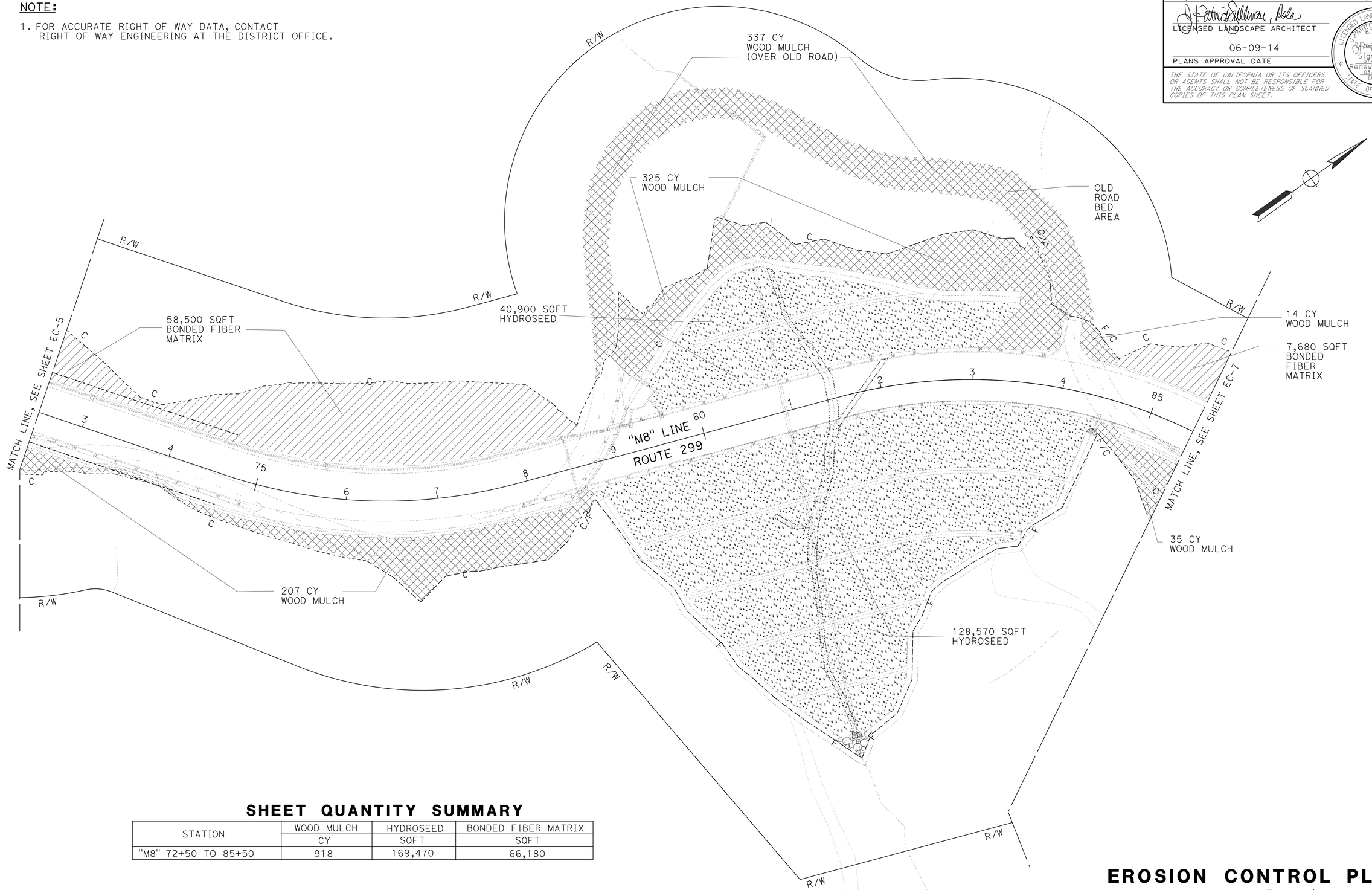

SHEET QUANTITY SUMMARY

STATION	WOOD MULCH	HYDROSEED	BONDED FIBER MATRIX
	CY	SQFT	SQFT
"M8" 72+50 TO 85+50	918	169,470	66,180

EROSION CONTROL PLAN

SCALE: 1" = 50'

EC-6

APPROVED FOR EROSION CONTROL ONLY

J. PATRICK SULLIVAN — REVISED BY
RON FLORY — DATE REVISED
CALCULATED-DESIGNED BY
CHECKED BY
SENIOR LANDSCAPE ARCHITECT
RON FLORY
STATE OF CALIFORNIA - DEPARTMENT OF TRANSPORTATION
Caltrans
LANDSCAPE ARCHITECTURE

P:\proj1\02\3E410\ plans\pse\23e410te006.dgn

LAST REVISION 03-05-14 | DATE PLOTTED => 25-AUG-2014 | TIME PLOTTED => 09:25

Dist	COUNTY	ROUTE	POST MILES TOTAL PROJECT	SHEET No.	TOTAL SHEETS
02	Sha	299	0.3/7.1	357	401

LICENSED LANDSCAPE ARCHITECT

06-09-14

PLANS APPROVAL DATE

LICENSED LANDSCAPE ARCHITECT J. PATRICK SULLIVAN #3125 Signature 07/31/14 Renewal Date 03/05/14 Date STATE OF CALIFORNIA

THE STATE OF CALIFORNIA OR ITS OFFICERS OR AGENTS SHALL NOT BE RESPONSIBLE FOR THE ACCURACY OR COMPLETENESS OF SCANNED COPIES OF THIS PLAN SHEET.

NOTE:

1. FOR ACCURATE RIGHT OF WAY DATA, CONTACT RIGHT OF WAY ENGINEERING AT THE DISTRICT OFFICE.

SHEET QUANTITY SUMMARY

STATION	WOOD MULCH	HYDROSEED	BONDED FIBER MATRIX
	CY	SQFT	SQFT
"M8" 85+50 to 98+50	752	79,150	61,500

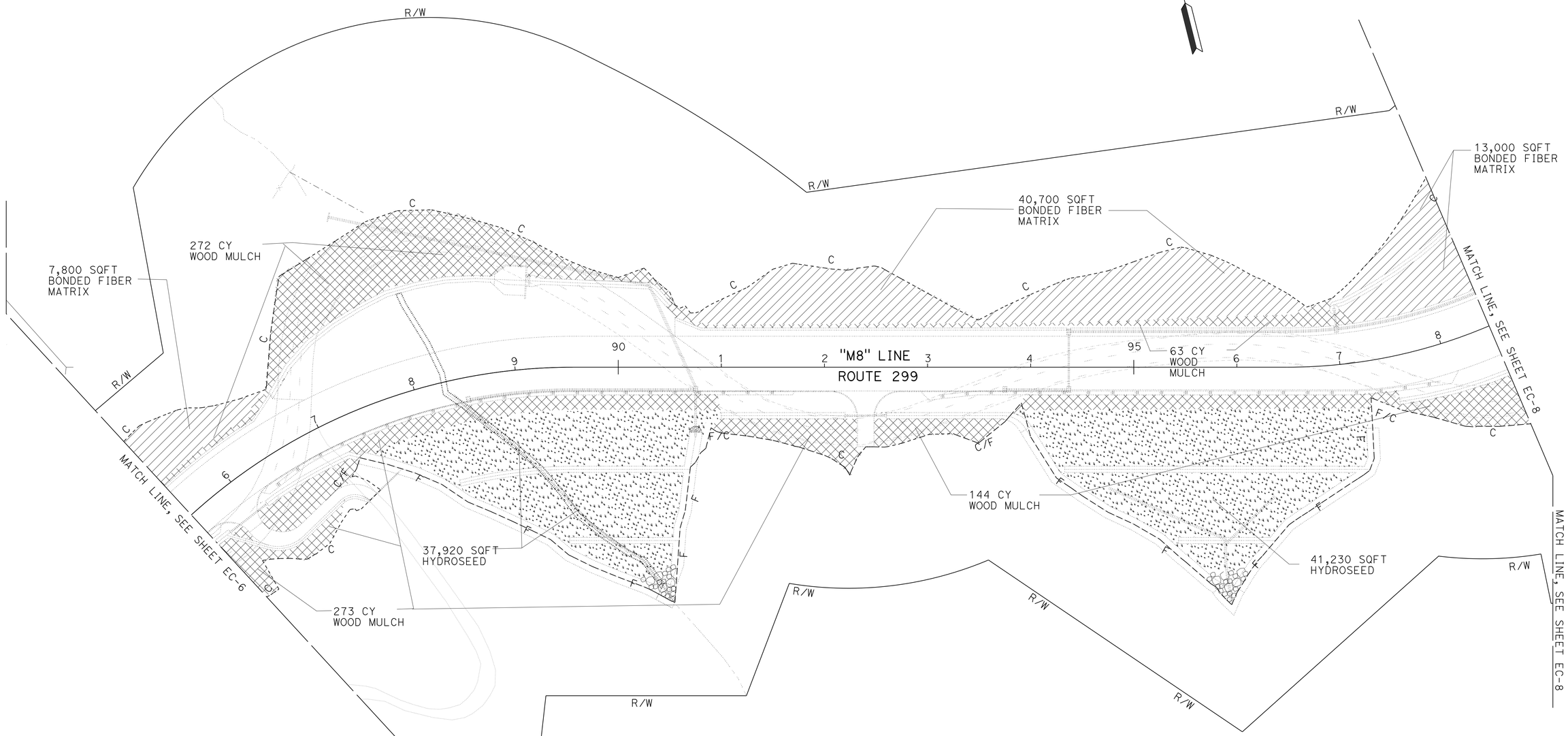

EROSION CONTROL PLAN

SCALE: 1" = 50'

EC-7

APPROVED FOR EROSION CONTROL ONLY

STATE OF CALIFORNIA - DEPARTMENT OF TRANSPORTATION

Caltrans® LANDSCAPE ARCHITECTURE

SENIOR LANDSCAPE ARCHITECT: RON FLORY

CALCULATED-DESIGNED BY: J. PATRICK SULLIVAN

CHECKED BY: RON FLORY

REVISED BY / DATE REVISED

P:\proj\02\3E410\ plans\pse\23e410te007.dgn

LAST REVISION 03-05-14 | DATE PLOTTED => 25-AUG-2014 | TIME PLOTTED => 09:25

BORDER LAST REVISED 7/2/2010 | USERNAME => s115152 | DGN FILE => 23e410te007.dgn | RELATIVE BORDER SCALE IS IN INCHES 0 1 2 3 | UNIT 0383 | PROJECT NUMBER & PHASE 02-0002-0042-1 | EA 02-3E410

Dist	COUNTY	ROUTE	POST MILES TOTAL PROJECT	SHEET No.	TOTAL SHEETS
02	Sha	299	0.3/7.1	358	401

LICENSED LANDSCAPE ARCHITECT

06-09-14

PLANS APPROVAL DATE

LICENSED LANDSCAPE ARCHITECT J. PATRICK SULLIVAN #3125 Signature 07/31/14 Renewal Date 03/05/14 Date STATE OF CALIFORNIA

THE STATE OF CALIFORNIA OR ITS OFFICERS OR AGENTS SHALL NOT BE RESPONSIBLE FOR THE ACCURACY OR COMPLETENESS OF SCANNED COPIES OF THIS PLAN SHEET.

NOTE:

1. FOR ACCURATE RIGHT OF WAY DATA, CONTACT RIGHT OF WAY ENGINEERING AT THE DISTRICT OFFICE.

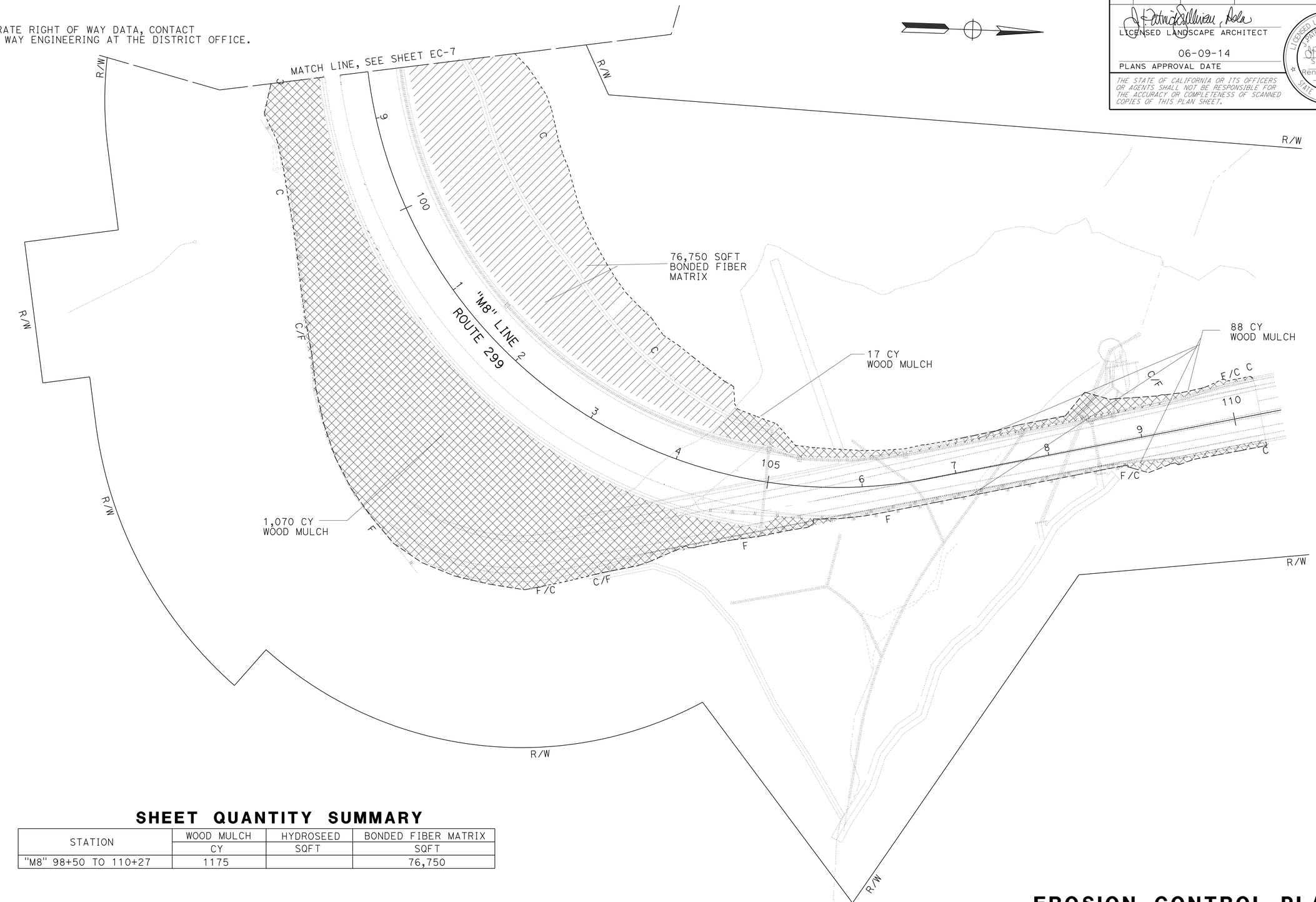

SHEET QUANTITY SUMMARY

STATION	WOOD MULCH	HYDROSEED	BONDED FIBER MATRIX
	CY	SQFT	SQFT
"M8" 98+50 TO 110+27	1175		76,750

EROSION CONTROL PLAN

SCALE: 1" = 50'

EC-8

APPROVED FOR EROSION CONTROL ONLY

STATE OF CALIFORNIA - DEPARTMENT OF TRANSPORTATION

Caltrans® LANDSCAPE ARCHITECTURE

SENIOR LANDSCAPE ARCHITECT: RON FLORY

CALCULATED-DESIGNED BY: J. PATRICK SULLIVAN

CHECKED BY: RON FLORY

REVISED BY / DATE REVISED

P:\proj1\02\3E410\ plans\pses\23e410te008.dgn

LAST REVISION 03-05-14 | DATE PLOTTED => 25-AUG-2014 | TIME PLOTTED => 09:25

BORDER LAST REVISED 7/2/2010 | USERNAME => s115152 | DGN FILE => 23e410te008.dgn | RELATIVE BORDER SCALE IS IN INCHES 0 1 2 3 | UNIT 0383 | PROJECT NUMBER & PHASE 02-0002-0042-1 | EA 02-3E410

Dist	COUNTY	ROUTE	POST MILES TOTAL PROJECT	SHEET No.	TOTAL SHEETS
02	Sha	299	0.3/7.1	359	401

LICENSED LANDSCAPE ARCHITECT

06-09-14

PLANS APPROVAL DATE

LICENSED LANDSCAPE ARCHITECT J. PATRICK SULLIVAN #3125 Signature 07/31/14 Renewal Date 03/05/14 Date STATE OF CALIFORNIA

THE STATE OF CALIFORNIA OR ITS OFFICERS OR AGENTS SHALL NOT BE RESPONSIBLE FOR THE ACCURACY OR COMPLETENESS OF SCANNED COPIES OF THIS PLAN SHEET.

NOTE:

1. FOR ACCURATE RIGHT OF WAY DATA, CONTACT RIGHT OF WAY ENGINEERING AT THE DISTRICT OFFICE.

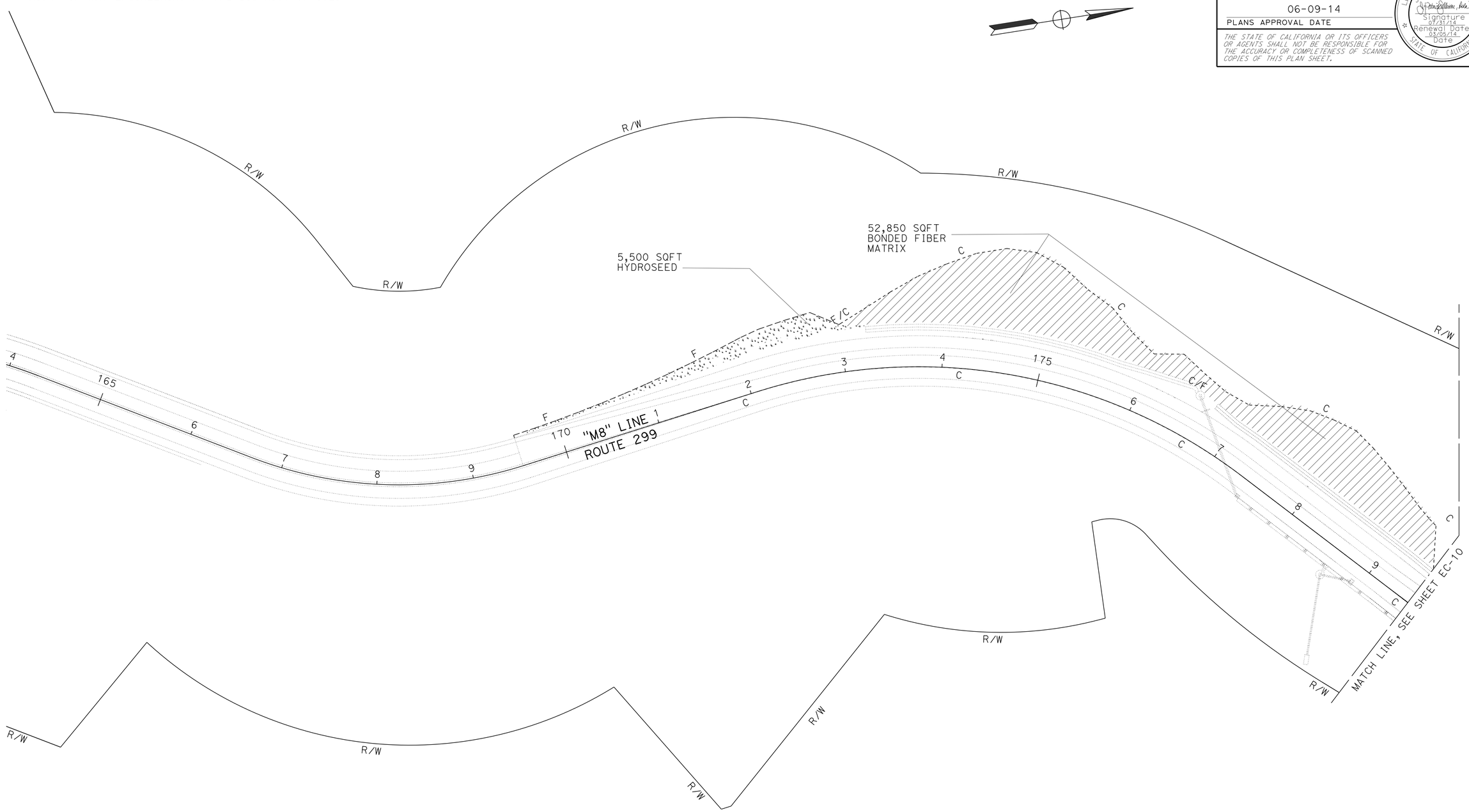

SHEET QUANTITY SUMMARY

STATION	WOOD MULCH	HYDROSEED	BONDED FIBER MATRIX
	CY	SQFT	SQFT
"M8" 169+50 TO 179+50		5500	52,850

EROSION CONTROL PLAN

SCALE: 1" = 50'

EC-9

APPROVED FOR EROSION CONTROL ONLY

REVISED BY | DATE REVISED

J. PATRICK SULLIVAN | RON FLORY

CALCULATED-DESIGNED BY | CHECKED BY

SENIOR LANDSCAPE ARCHITECT | RON FLORY

STATE OF CALIFORNIA - DEPARTMENT OF TRANSPORTATION

Caltrans® LANDSCAPE ARCHITECTURE

P:\proj\02\3E410\ plans\ase\23e410te009.dgn

LAST REVISION 03-05-14 | DATE PLOTTED => 25-AUG-2014 | TIME PLOTTED => 09:25

Dist	COUNTY	ROUTE	POST MILES TOTAL PROJECT	SHEET No.	TOTAL SHEETS
02	Sha	299	0.3/7.1	360	401

LICENSED LANDSCAPE ARCHITECT

06-09-14

PLANS APPROVAL DATE

LICENSED LANDSCAPE ARCHITECT J. PATRICK SULLIVAN #3125 Signature 07/31/14 Renewal Date 03/05/14 Date STATE OF CALIFORNIA

THE STATE OF CALIFORNIA OR ITS OFFICERS OR AGENTS SHALL NOT BE RESPONSIBLE FOR THE ACCURACY OR COMPLETENESS OF SCANNED COPIES OF THIS PLAN SHEET.

NOTE:

1. FOR ACCURATE RIGHT OF WAY DATA, CONTACT RIGHT OF WAY ENGINEERING AT THE DISTRICT OFFICE.

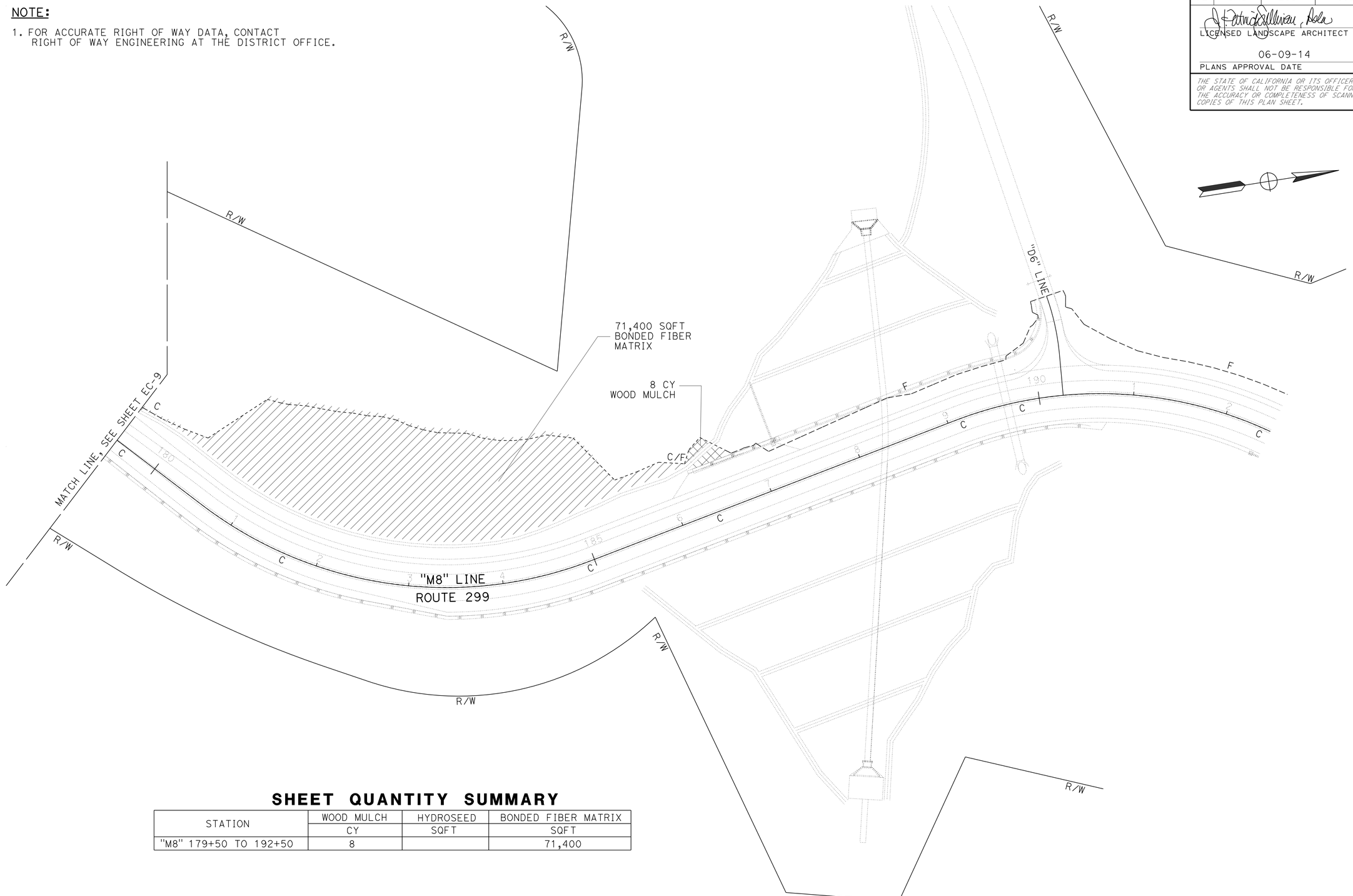

SHEET QUANTITY SUMMARY

STATION	WOOD MULCH	HYDROSEED	BONDED FIBER MATRIX
	CY	SQFT	SQFT
"M8" 179+50 TO 192+50	8		71,400

APPROVED FOR EROSION CONTROL ONLY

EROSION CONTROL PLAN

SCALE: 1" = 50'

EC-10

STATE OF CALIFORNIA - DEPARTMENT OF TRANSPORTATION
Caltrans® LANDSCAPE ARCHITECTURE

SENIOR LANDSCAPE ARCHITECT: RON FLORY
J. PATRICK SULLIVAN: RON FLORY
CALCULATED-DESIGNED BY / CHECKED BY
REVISED BY / DATE REVISED

P:\proj\02\3E410\ plans\lsa\23e410te010.dgn

LAST REVISION 03-05-14 | DATE PLOTTED => 25-AUG-2014 | TIME PLOTTED => 09:25

Dist	COUNTY	ROUTE	POST MILES TOTAL PROJECT	SHEET No.	TOTAL SHEETS
02	Sha	299	0.3/7.1	361	401

LICENSED LANDSCAPE ARCHITECT

06-09-14
PLANS APPROVAL DATE

LICENSED LANDSCAPE ARCHITECT J. PATRICK SULLIVAN #3125 Signature 07/31/14 Renewal Date 03/05/14 Date STATE OF CALIFORNIA

THE STATE OF CALIFORNIA OR ITS OFFICERS OR AGENTS SHALL NOT BE RESPONSIBLE FOR THE ACCURACY OR COMPLETENESS OF SCANNED COPIES OF THIS PLAN SHEET.

NOTE:

1. FOR ACCURATE RIGHT OF WAY DATA, CONTACT RIGHT OF WAY ENGINEERING AT THE DISTRICT OFFICE.

SHEET QUANTITY SUMMARY

STATION	WOOD MULCH	HYDROSEED	BONDED FIBER MATRIX
	CY	SQFT	SQFT
"M8" 216+50 TO 230+50	131		33,250

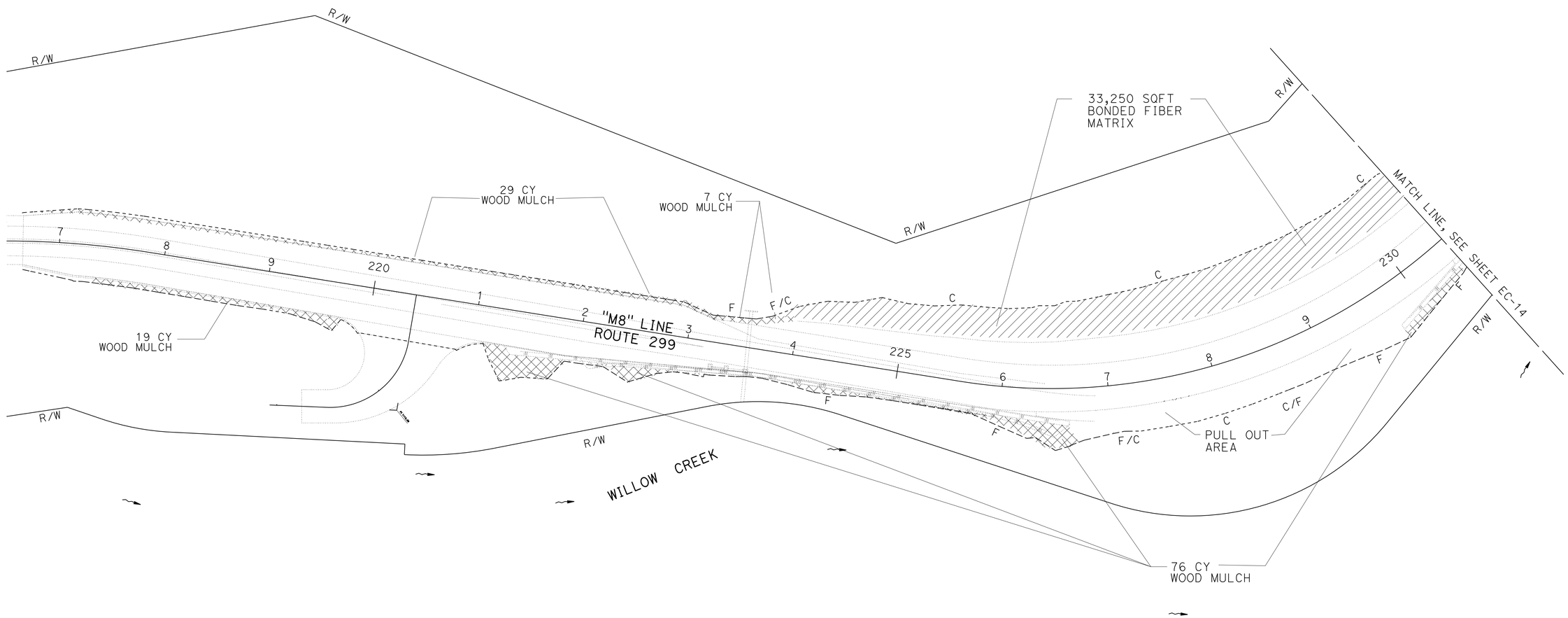

EROSION CONTROL PLAN

SCALE: 1" = 50'

APPROVED FOR EROSION CONTROL ONLY

EC-11

STATE OF CALIFORNIA - DEPARTMENT OF TRANSPORTATION
Caltrans® LANDSCAPE ARCHITECTURE

SENIOR LANDSCAPE ARCHITECT: RON FLORY
CALCULATED-DESIGNED BY: J. PATRICK SULLIVAN
CHECKED BY: RON FLORY
REVISED BY / DATE REVISED

P:\proj\02\3E410\ plans\pse\23e410te011.dgn

LAST REVISION 03-05-14
DATE PLOTTED => 25-AUG-2014
TIME PLOTTED => 09:25

Dist	COUNTY	ROUTE	POST MILES TOTAL PROJECT	SHEET No.	TOTAL SHEETS
02	Sha	299	0.3/7.1	362	401

LICENSED LANDSCAPE ARCHITECT

06-09-14

PLANS APPROVAL DATE

LICENSED LANDSCAPE ARCHITECT J. PATRICK SULLIVAN #3125 Signature 07/31/14 Renewal Date 03/05/14 Date STATE OF CALIFORNIA

THE STATE OF CALIFORNIA OR ITS OFFICERS OR AGENTS SHALL NOT BE RESPONSIBLE FOR THE ACCURACY OR COMPLETENESS OF SCANNED COPIES OF THIS PLAN SHEET.

NOTE:

1. FOR ACCURATE RIGHT OF WAY DATA, CONTACT RIGHT OF WAY ENGINEERING AT THE DISTRICT OFFICE.

SHEET QUANTITY SUMMARY

STATION	WOOD MULCH	HYDROSEED	BONDED FIBER MATRIX
	CY	SQFT	SQFT
"M8" 230+50 TO 243+50	182		82,800

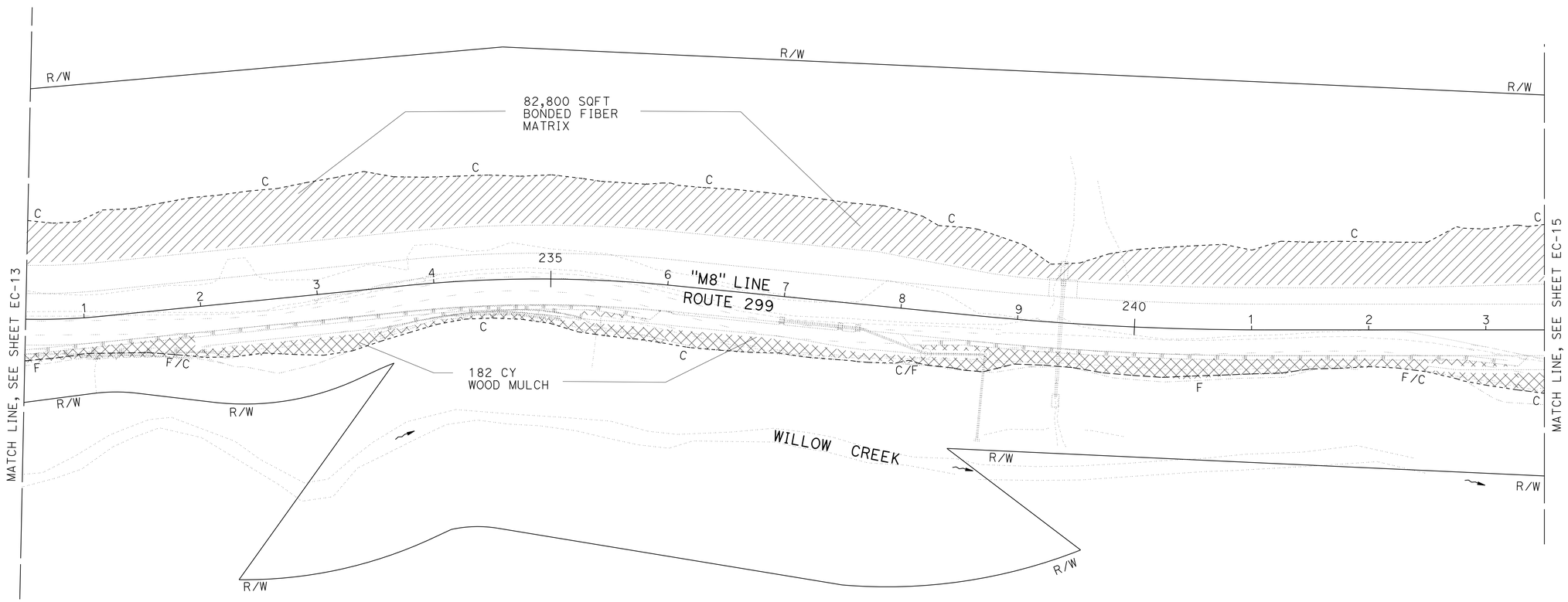

APPROVED FOR EROSION CONTROL ONLY

EROSION CONTROL PLAN

SCALE: 1" = 50'

EC-12

STATE OF CALIFORNIA - DEPARTMENT OF TRANSPORTATION

Caltrans LANDSCAPE ARCHITECTURE

SENIOR LANDSCAPE ARCHITECT: RON FLORY

CALCULATED-DESIGNED BY: J. PATRICK SULLIVAN

CHECKED BY: RON FLORY

REVISED BY

DATE REVISED

P:\proj1\02\3E410_plans\pse\23e410te012.dgn

LAST REVISION 03-05-14 | DATE PLOTTED => 25-AUG-2014 | TIME PLOTTED => 09:25

Dist	COUNTY	ROUTE	POST MILES TOTAL PROJECT	SHEET No.	TOTAL SHEETS
02	Sha	299	0.3/7.1	363	401

LICENSED LANDSCAPE ARCHITECT

06-09-14

PLANS APPROVAL DATE

LICENSED LANDSCAPE ARCHITECT J. PATRICK SULLIVAN #3125 Signature 07/31/14 Renewal Date 03/05/14 Date STATE OF CALIFORNIA

THE STATE OF CALIFORNIA OR ITS OFFICERS OR AGENTS SHALL NOT BE RESPONSIBLE FOR THE ACCURACY OR COMPLETENESS OF SCANNED COPIES OF THIS PLAN SHEET.

NOTE:

1. FOR ACCURATE RIGHT OF WAY DATA, CONTACT RIGHT OF WAY ENGINEERING AT THE DISTRICT OFFICE.

SHEET QUANTITY SUMMARY

STATION	WOOD MULCH	HYDROSEED	BONDED FIBER MATRIX
	CY	SQFT	SQFT
"M8" 243+50 TO 256+50	212	450	67,800

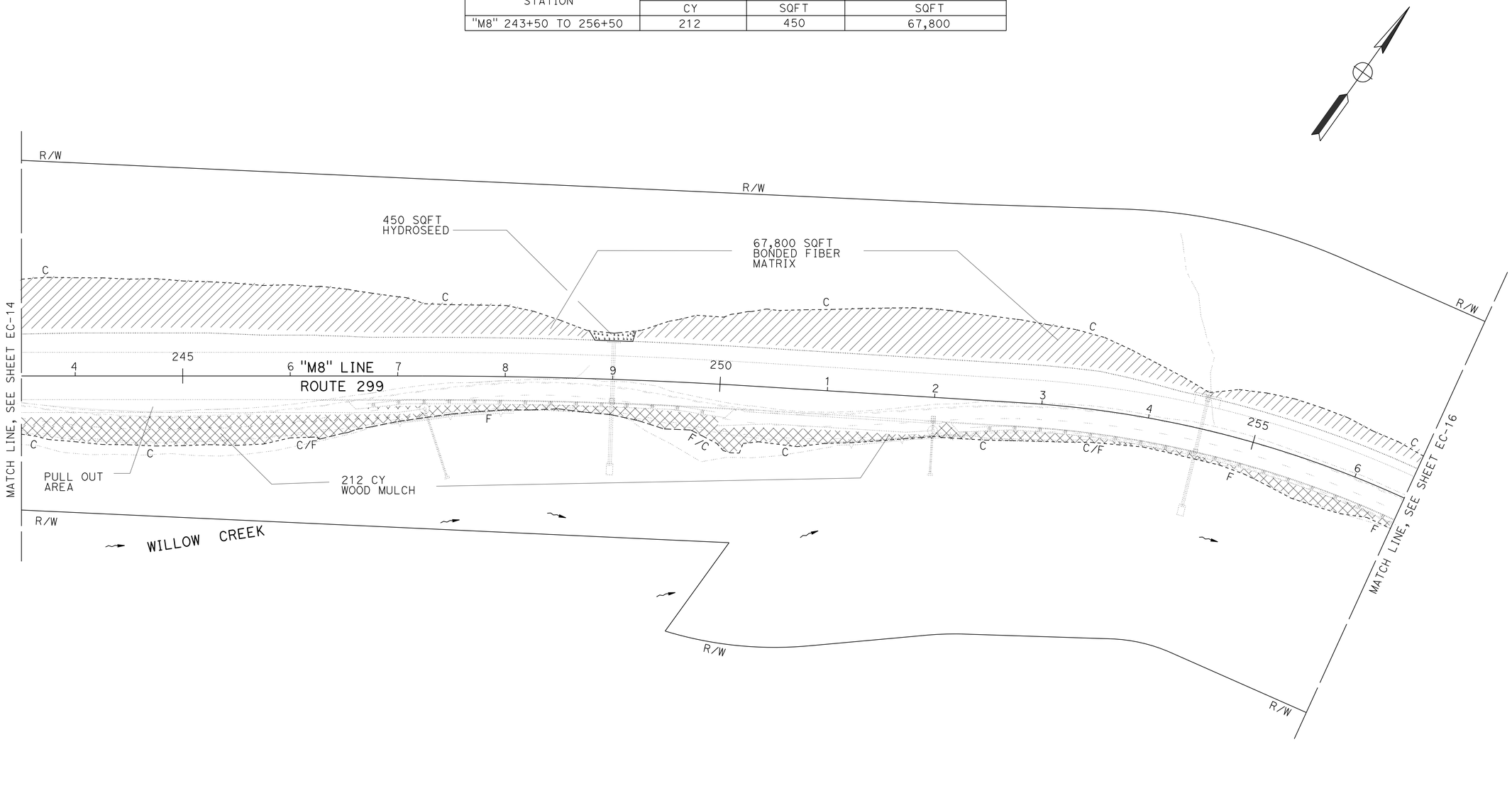

EROSION CONTROL PLAN

SCALE: 1" = 50'

EC-13

APPROVED FOR EROSION CONTROL ONLY

REVISED BY | DATE REVISED

J. PATRICK SULLIVAN | RON FLORY

CALCULATED-DESIGNED BY | CHECKED BY

SENIOR LANDSCAPE ARCHITECT | RON FLORY

STATE OF CALIFORNIA - DEPARTMENT OF TRANSPORTATION

Caltrans® LANDSCAPE ARCHITECTURE

P:\proj1\02\3E410\ plans\pse\23e410te013.dgn

LAST REVISION 03-05-14 | DATE PLOTTED => 25-AUG-2014 TIME PLOTTED => 09:25

Dist	COUNTY	ROUTE	POST MILES TOTAL PROJECT	SHEET No.	TOTAL SHEETS
02	Sha	299	0.3/7.1	364	401

LICENSED LANDSCAPE ARCHITECT

06-09-14

PLANS APPROVAL DATE

LICENSED LANDSCAPE ARCHITECT J. PATRICK SULLIVAN #3125 Signature 07/31/14 Renewal Date 03/05/14 Date STATE OF CALIFORNIA

THE STATE OF CALIFORNIA OR ITS OFFICERS OR AGENTS SHALL NOT BE RESPONSIBLE FOR THE ACCURACY OR COMPLETENESS OF SCANNED COPIES OF THIS PLAN SHEET.

NOTE:

1. FOR ACCURATE RIGHT OF WAY DATA, CONTACT RIGHT OF WAY ENGINEERING AT THE DISTRICT OFFICE.

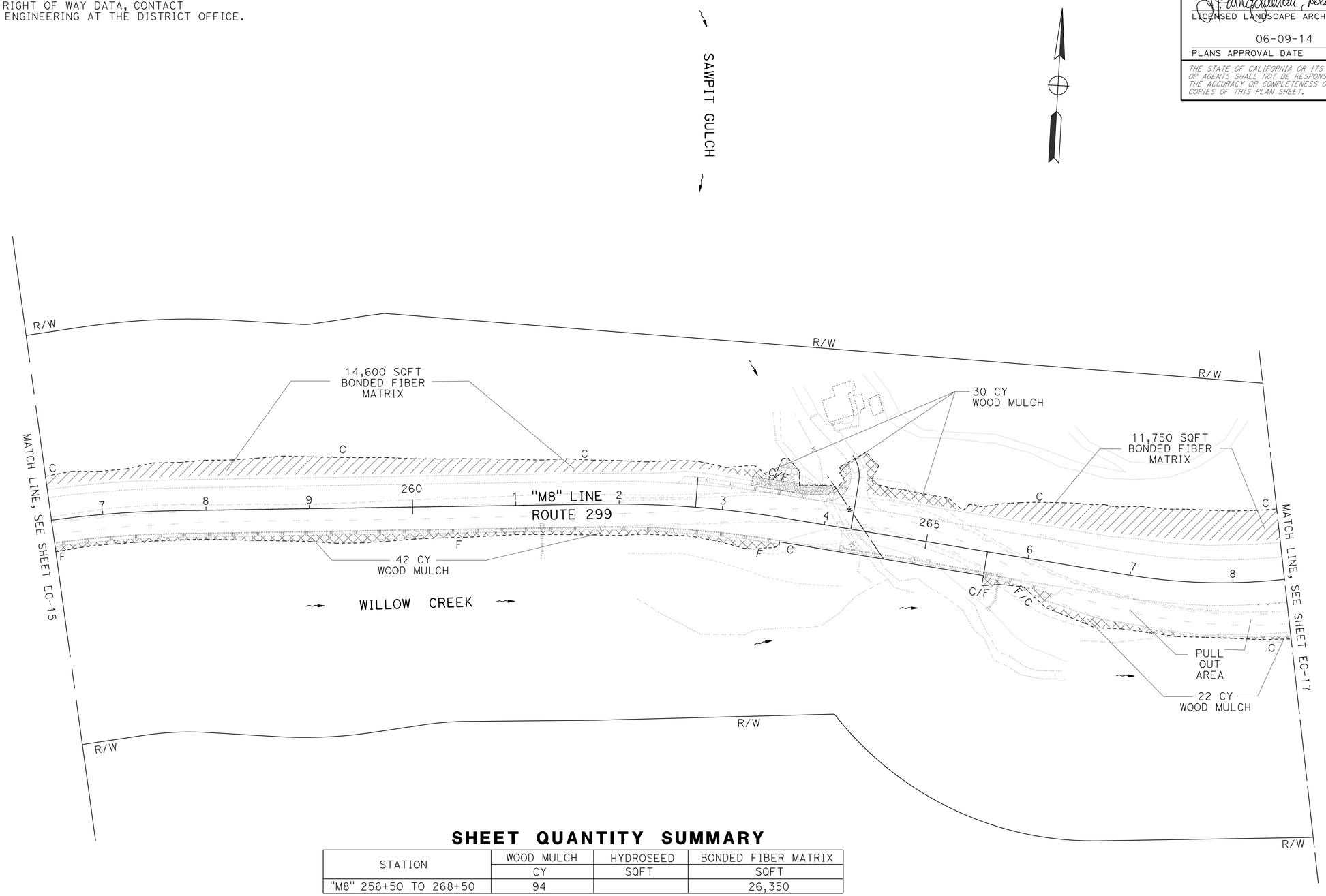

SHEET QUANTITY SUMMARY

STATION	WOOD MULCH	HYDROSEED	BONDED FIBER MATRIX
	CY	SQFT	SQFT
"M8" 256+50 TO 268+50	94		26,350

EROSION CONTROL PLAN

SCALE: 1" = 50'

EC-14

APPROVED FOR EROSION CONTROL ONLY

STATE OF CALIFORNIA - DEPARTMENT OF TRANSPORTATION
Caltrans® LANDSCAPE ARCHITECTURE

SENIOR LANDSCAPE ARCHITECT: RON FLORY
CALCULATED-DESIGNED BY: J. PATRICK SULLIVAN
CHECKED BY: RON FLORY
REVISED BY
DATE REVISED

P:\proj1\02\3E410\ plans\ase\23e410te014.dgn

LAST REVISION 03-05-14 | DATE PLOTTED => 25-AUG-2014 | TIME PLOTTED => 09:25

BORDER LAST REVISED 7/2/2010 | USERNAME => s115152 | DGN FILE => 23e410te014.dgn | RELATIVE BORDER SCALE IS IN INCHES 0 1 2 3 | UNIT 0383 | PROJECT NUMBER & PHASE 02-0002-0042-1 | EA 02-3E410

Dist	COUNTY	ROUTE	POST MILES TOTAL PROJECT	SHEET No.	TOTAL SHEETS
02	Sha	299	0.3/7.1	365	401

LICENSED LANDSCAPE ARCHITECT

06-09-14

PLANS APPROVAL DATE

LICENSED LANDSCAPE ARCHITECT J. PATRICK SULLIVAN #3125 Signature 07/31/14 Renewal Date 03/05/14 Date STATE OF CALIFORNIA

THE STATE OF CALIFORNIA OR ITS OFFICERS OR AGENTS SHALL NOT BE RESPONSIBLE FOR THE ACCURACY OR COMPLETENESS OF SCANNED COPIES OF THIS PLAN SHEET.

NOTE:

1. FOR ACCURATE RIGHT OF WAY DATA, CONTACT RIGHT OF WAY ENGINEERING AT THE DISTRICT OFFICE.

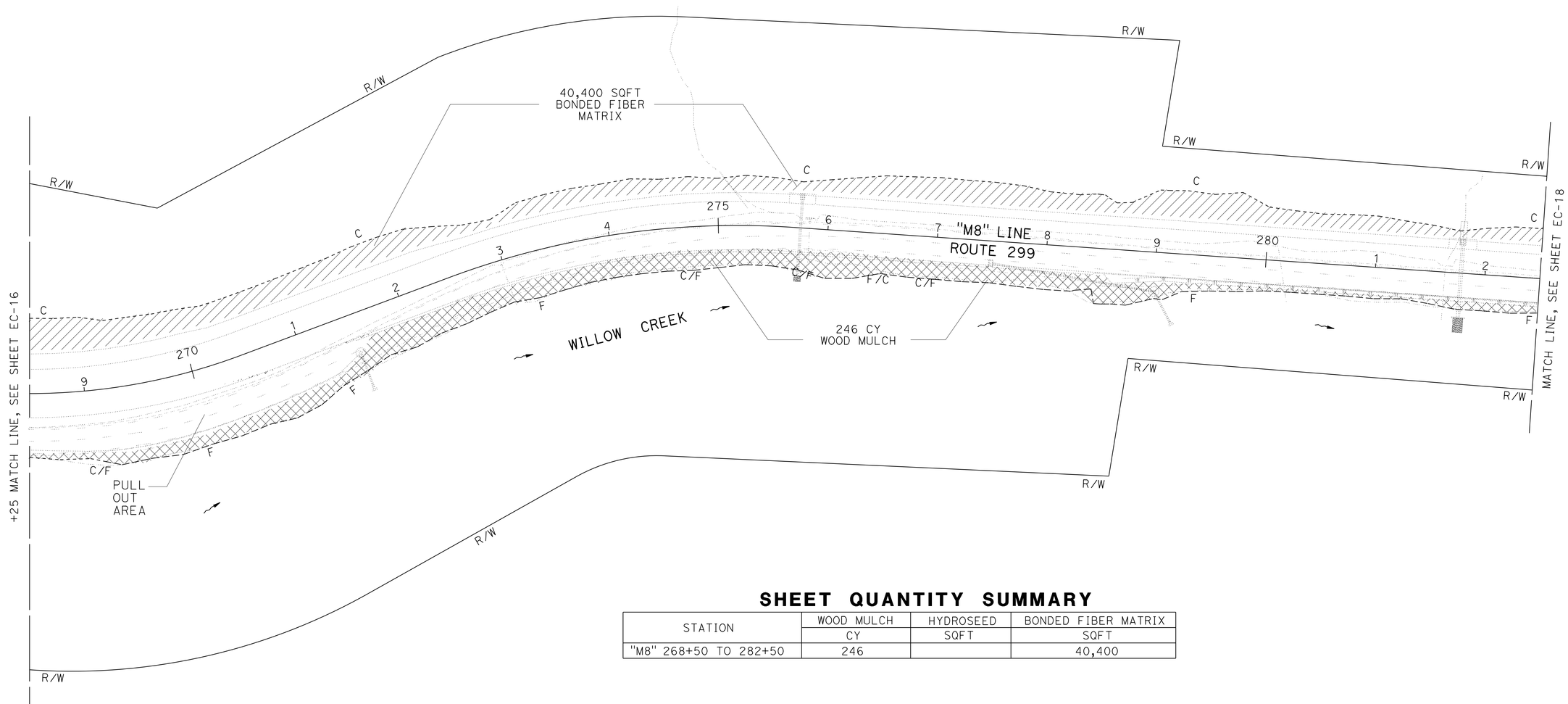

SHEET QUANTITY SUMMARY

STATION	WOOD MULCH	HYDROSEED	BONDED FIBER MATRIX
	CY	SQFT	SQFT
"M8" 268+50 TO 282+50	246		40,400

EROSION CONTROL PLAN

SCALE: 1" = 50'

EC-15

APPROVED FOR EROSION CONTROL ONLY

REVISED BY	DATE REVISED

CALCULATED-DESIGNED BY: J. PATRICK SULLIVAN
CHECKED BY: RON FLORY
SENIOR LANDSCAPE ARCHITECT: RON FLORY

STATE OF CALIFORNIA - DEPARTMENT OF TRANSPORTATION
Caltrans® LANDSCAPE ARCHITECTURE

P:\proj\02\3E410\ plans\pse\23e410te015.dgn

LAST REVISION 03-05-14 | DATE PLOTTED => 25-AUG-2014 TIME PLOTTED => 09:25

Dist	COUNTY	ROUTE	POST MILES TOTAL PROJECT	SHEET No.	TOTAL SHEETS
02	Sha	299	0.3/7.1	366	401

LICENSED LANDSCAPE ARCHITECT

06-09-14

PLANS APPROVAL DATE

LICENSED LANDSCAPE ARCHITECT J. PATRICK SULLIVAN #3125 Signature 07/31/14 Renewal Date 03/05/14 Date STATE OF CALIFORNIA

THE STATE OF CALIFORNIA OR ITS OFFICERS OR AGENTS SHALL NOT BE RESPONSIBLE FOR THE ACCURACY OR COMPLETENESS OF SCANNED COPIES OF THIS PLAN SHEET.

NOTE:

1. FOR ACCURATE RIGHT OF WAY DATA, CONTACT RIGHT OF WAY ENGINEERING AT THE DISTRICT OFFICE.

SHEET QUANTITY SUMMARY

STATION	WOOD MULCH	HYDROSEED	BONDED FIBER MATRIX
	CY	SQFT	SQFT
"M8" 282+50 TO 296+50	190		50,500

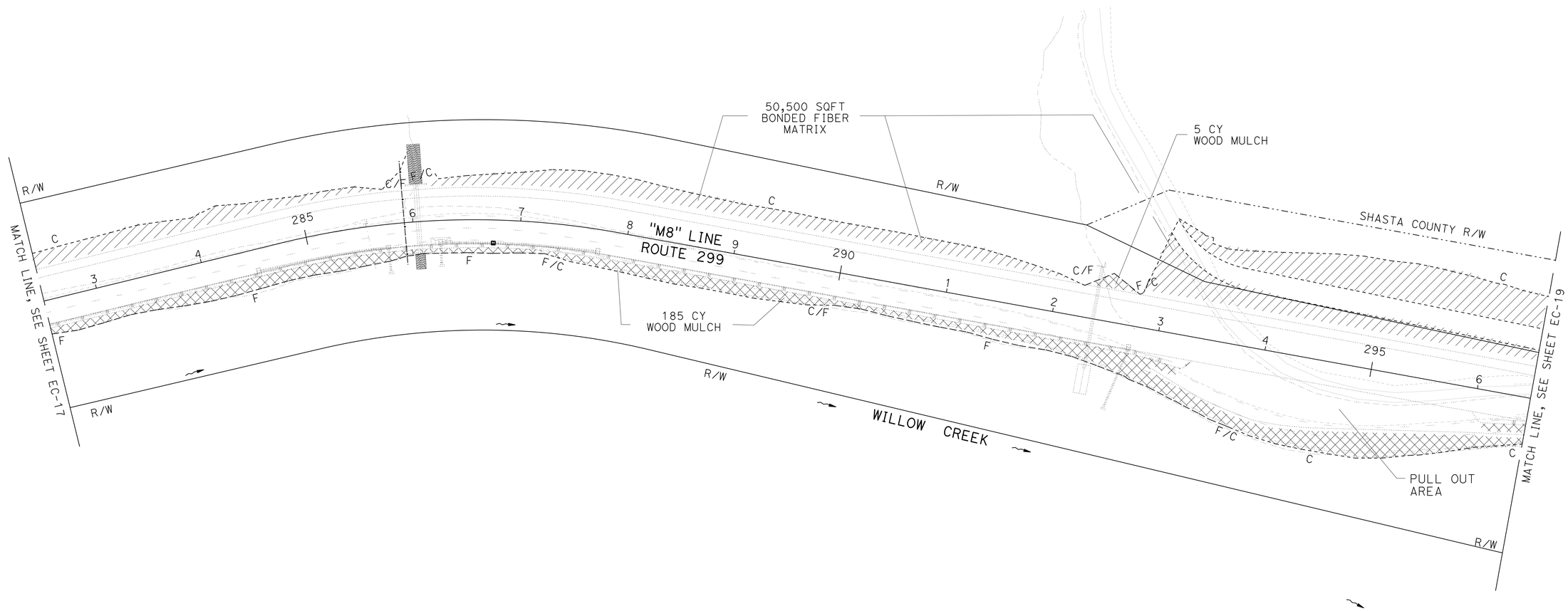

EROSION CONTROL PLAN

SCALE: 1" = 50'

EC-16

APPROVED FOR EROSION CONTROL ONLY

STATE OF CALIFORNIA - DEPARTMENT OF TRANSPORTATION

Caltrans® LANDSCAPE ARCHITECTURE

SENIOR LANDSCAPE ARCHITECT: RON FLORY

CALCULATED-DESIGNED BY: J. PATRICK SULLIVAN

CHECKED BY: RON FLORY

REVISED BY

DATE REVISED

P:\proj\02\3E410\plans\pse\23e410te016.dgn

LAST REVISION 03-05-14

DATE PLOTTED => 25-AUG-2014

TIME PLOTTED => 09:25

Dist	COUNTY	ROUTE	POST MILES TOTAL PROJECT	SHEET No.	TOTAL SHEETS
02	Sha	299	0.3/7.1	367	401

LICENSED LANDSCAPE ARCHITECT

06-09-14

PLANS APPROVAL DATE

LICENSED LANDSCAPE ARCHITECT J. PATRICK SULLIVAN #3125 Signature 07/31/14 Renewal Date 03/05/14 Date STATE OF CALIFORNIA

THE STATE OF CALIFORNIA OR ITS OFFICERS OR AGENTS SHALL NOT BE RESPONSIBLE FOR THE ACCURACY OR COMPLETENESS OF SCANNED COPIES OF THIS PLAN SHEET.

NOTE:

1. FOR ACCURATE RIGHT OF WAY DATA, CONTACT RIGHT OF WAY ENGINEERING AT THE DISTRICT OFFICE.

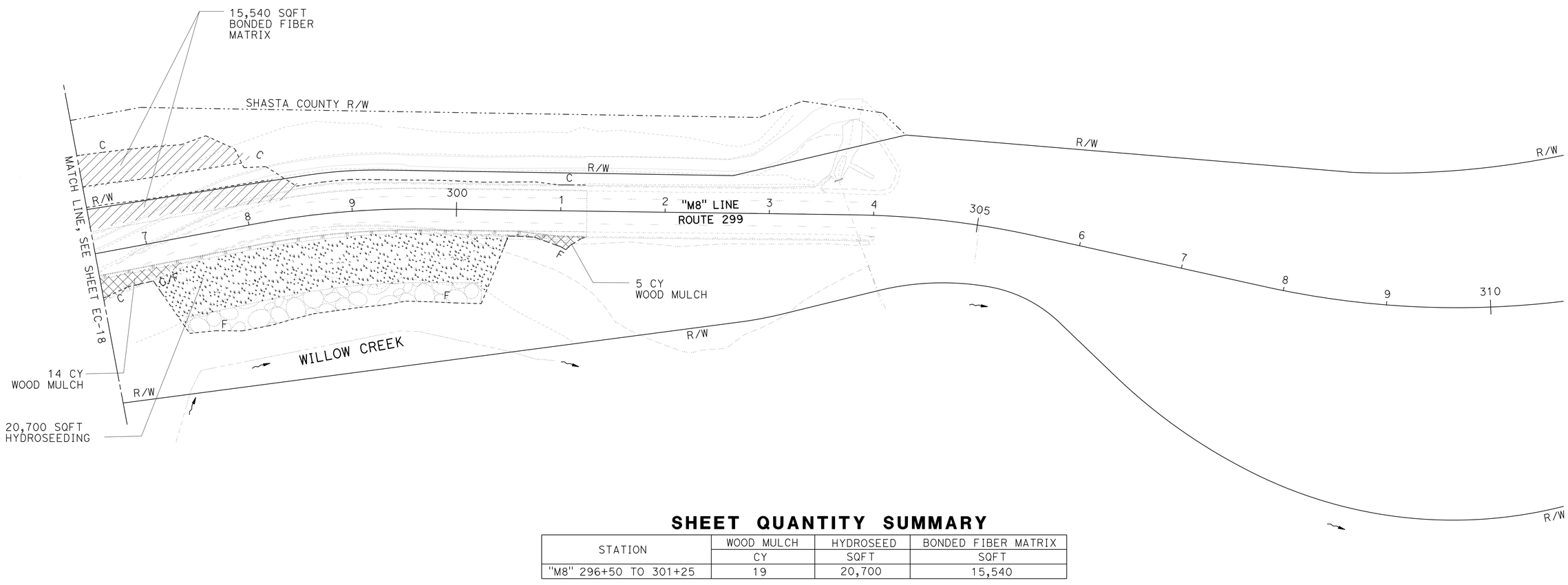

SHEET QUANTITY SUMMARY

STATION	WOOD MULCH	HYDROSEED	BONDED FIBER MATRIX
	CY	SQFT	SQFT
"M8" 296+50 TO 301+25	19	20,700	15,540

EROSION CONTROL PLAN

SCALE: 1" = 50'

EC-17

APPROVED FOR LANDSCAPE WORK ONLY

REVISED BY | DATE REVISED

J. PATRICK SULLIVAN | RON FLORY

CALCULATED-DESIGNED BY | CHECKED BY

SENIOR LANDSCAPE ARCHITECT | RON FLORY

STATE OF CALIFORNIA - DEPARTMENT OF TRANSPORTATION

Caltrans® LANDSCAPE ARCHITECTURE

P:\proj1\02\3E410_plans\pses\23e410te017.dgn

LAST REVISION 03-05-14 | DATE PLOTTED => 25-AUG-2014 | TIME PLOTTED => 09:25

BORDER LAST REVISED 7/2/2010 | USERNAME => s115152 | DGN FILE => 23e410te017.dgn | RELATIVE BORDER SCALE IS IN INCHES 0 1 2 3 | UNIT 0383 | PROJECT NUMBER & PHASE 02-0002-0042-1 | EA 02-3E410

Dist	COUNTY	ROUTE	POST MILES TOTAL PROJECT	SHEET No.	TOTAL SHEETS
02	Sha	299	0.3/7.1	368	401

LICENSED LANDSCAPE ARCHITECT

06-09-14
PLANS APPROVAL DATE

LICENSED LANDSCAPE ARCHITECT J. PATRICK SULLIVAN #3125 Signature 07/31/14 Renewal Date 03/05/14 Date STATE OF CALIFORNIA

THE STATE OF CALIFORNIA OR ITS OFFICERS OR AGENTS SHALL NOT BE RESPONSIBLE FOR THE ACCURACY OR COMPLETENESS OF SCANNED COPIES OF THIS PLAN SHEET.

NOTES:

1. (N) - NOT A SEPARATE PAY ITEM, FOR INFORMATION ONLY

HYDROSEED SEQUENCE AND APPLICATION

SEQUENCE	ITEM	MATERIAL DESCRIPTION	MATERIAL TYPE	APPLICATION RATE (N)	(N) QUANTITY*
STEP 1	HYDROSEED	PURE LIVE SEED	MIX	90 LB/ACRE	1586 LB
		FIBER	ALTERNATE	2000 LB/ACRE	35,240 LB
		SLOW RELEASE FERTLIZER	GRANULAR	100 LB/ACRE	1762 LB
STEP 2	HYDROSEED	COMPOST	RECYCLED WOOD PRODUCT	1.2 CUYDS/ACRE	21 CY
		FIBER	ALTERNATE	1800 LB/ACRE	31,716 LB
		TACKIFIER	PSYLLIUM	100 LB/ACRE	1762 LB

* QUANTITIES BASED ON 17.62 ACRES OF HYDROSEEDING

HYDROSEED SEED MIX

BOTANICAL NAME (COMMON NAME)	PERCENT GERMINATION (MINIMUM)	(N) PURE LIVE SEED LB/ACRE (SLOPE MEASUREMENT)
ACHILLEA MILLEFOLIUM (COMMON YARROW)	70	1
BROMUS HORDEACUS (BLANDO BROME)	70	15
FESTUCA IDAHOENSIS (WESTERN FESCUE)	70	10
HORDEUM VULGARE UC 937 (COMMON WINTER BARLEY)	80	15
LASTHENIA CALIFORNICA (DWARF GOLDFIELDS)	80	6
LOLIUM MULTIFLORUM-TETRAPLOID (ANNUAL RYE GRASS)	80	15
LOTUS PURSHIANUS (SPANISH CLOVER)	80	10
LUPINUS NANA (DWARF LUPINES)	60	3
SECALE CEREAL 'MODESTO' (WINTER RYE)	70	15
	TOTAL	90

BONDED FIBER MATRIX SEQUENCE AND APPLICATION

SEQUENCE	ITEM	MATERIAL DESCRIPTION	MATERIAL TYPE	APPLICATION RATE (N)	(N) QUANTITY*
STEP 1	BONDED FIBER MATRIX	PURE LIVE SEED	MIX	90 LB/ACRE	1820 LB
		FIBER	ALTERNATE	2000 LB/ACRE	40,440 LB
		SLOW RELEASE FERTLIZER	GRANULAR	100 LB/ACRE	2022 LB
STEP 2	BONDED FIBER MATRIX	FIBER	ALTERNATE	2000 LB/ACRE	40,440 LB

* QUANTITIES BASED ON 20.22 ACRES OF BONDED FIBER MATRIX

BONDED FIBER MATRIX SEED MIX

BOTANICAL NAME (COMMON NAME)	PERCENT GERMINATION (MINIMUM)	(N) PURE LIVE SEED LB/ACRE (SLOPE MEASUREMENT)
BROMUS HORDEACUS (BLANDO BROME)	70	15
FESTUCA IDAHOENSIS (WESTERN FESCUE)	70	10
HORDEUM VULGARE UC 937 (COMMON WINTER BARLEY)	80	15
LASTHENIA CALIFORNICA (DWARF GOLDFIELDS)	80	4
LOLIUM MULTIFLORUM-TETRAPLOID (ANNUAL RYE GRASS)	80	15
LOTUS PURSHIANUS (SPANISH CLOVER)	80	10
SECALE CEREAL 'MODESTO' (WINTER RYE)	70	15
VICIA VILLOSA (PURPLE VETCH)	70	6
	TOTAL	90

EROSION CONTROL QUANTITIES

ECQ-1

REVISED BY | DATE REVISED
J. PATRICK SULLIVAN | RON FLORY
CALCULATED-DESIGNED BY | CHECKED BY
SENIOR LANDSCAPE ARCHITECT | RON FLORY
STATE OF CALIFORNIA - DEPARTMENT OF TRANSPORTATION
Caltrans® LANDSCAPE ARCHITECTURE

P:\proj1\02\3F410\ plans\pse\23e410tg001.dgn

LAST REVISION 03-05-14 | DATE PLOTTED => 25-AUG-2014 | TIME PLOTTED => 09:25

Dist	COUNTY	ROUTE	POST MILES TOTAL PROJECT	SHEET No.	TOTAL SHEETS
02	Sha	299	0.3/7.1	369	401

LICENSED LANDSCAPE ARCHITECT

06-09-14

PLANS APPROVAL DATE

LICENSED LANDSCAPE ARCHITECT J. PATRICK SULLIVAN #3125 Signature 07/31/14 Renewal Date 03/05/14 Date STATE OF CALIFORNIA

THE STATE OF CALIFORNIA OR ITS OFFICERS OR AGENTS SHALL NOT BE RESPONSIBLE FOR THE ACCURACY OR COMPLETENESS OF SCANNED COPIES OF THIS PLAN SHEET.

EROSION CONTROL QUANTITIES

SHEET No.	STATION "M8"	HYDROSEED	EROSION CONTROL (BONDED FIBER MATRIX) (SQFT)	WOOD MULCH
		SQFT	SQFT	CY
EC-1	17+50 TO 25+50	26,980	7355	950
EC-2	25+50 TO 35+50	248,770	24,780	99
EC-3	35+50 TO 49+00		97,730	724
EC-4	49+00 TO 58+50	183,450		1185
EC-5	58+50 TO 72+50	33,036	105,670	1122
EC-6	72+50 TO 85+50	169,470	66,180	918
EC-7	85+50 TO 98+50	79,150	61,500	752
EC-8	98+50 TO 110+27		76,750	1175
EC-9	169+50 TO 179+50	5500	52,850	
EC-10	179+50 TO 192+50		71,400	8
EC-11	192+50 TO 204+50			
EC-12	204+50 TO 216+50			
EC-13	216+50 TO 230+50		33,250	131
EC-14	230+50 TO 243+50		82,800	182
EC-15	243+50 TO 256+50	450	67,800	212
EC-16	256+50 TO 268+50		26,350	94
EC-17	268+50 TO 282+50		40,400	246
EC-18	282+50 TO 296+50		50,500	190
EC-19	296+50 TO 301+25	20,700	15,540	19
TOTAL		767,506	880,855	8007

EROSION CONTROL QUANTITIES

ECQ-2

REVISED BY | DATE REVISED

J. PATRICK SULLIVAN | RON FLORY

CALCULATED-DESIGNED BY | CHECKED BY

SENIOR LANDSCAPE ARCHITECT | RON FLORY

STATE OF CALIFORNIA - DEPARTMENT OF TRANSPORTATION

Caltrans® LANDSCAPE ARCHITECTURE

P:\proj1\02\3f410\plans\pse\23e410tg002.dgn

LAST REVISION 03-05-14 | DATE PLOTTED => 25-AUG-2014 | TIME PLOTTED => 09:25

M

Maint	MAINTENANCE
Max	MAXIMUM
MB	METAL BEAM
MBB	METAL BEAM BARRIER
MBGR	METAL BEAM GUARD RAILING
Med	MEDIAN
MGS	MIDWEST GUARDRAIL SYSTEM
MH	MANHOLE
Min	MINIMUM
Misc	MISCELLANEOUS
Misc I & S	MISCELLANEOUS IRON AND STEEL
Mkr	MARKER
Mod	MODIFIED,
	MODIFY
Mon	MONUMENT
MP	METAL PLATE
MPGR	METAL PLATE GUARD RAILING
MR	MOVEMENT RATING
MSE	MECHANICALLY STABILIZED EMBANKMENT
Mt	MOUNTAIN, MOUNT
Mtl	MATERIAL
MVP	MAINTENANCE VEHICLE PULLOUT

N

N	NORTH
NB	NORTHBOUND
No.	NUMBER (MUST HAVE PERIOD)
Nos.	NUMBERS (MUST HAVE PERIOD)
NPS	NOMINAL PIPE SIZE
NS	NEAR SIDE
NSP	NEW STANDARD PLAN
NTS	NOT TO SCALE

O

Oblr	OBLITERATE
OC	OVERCROSSING
OD	OUTSIDE DIAMETER
OF	OUTSIDE FACE
OG	ORIGINAL GROUND
OGAC	OPEN GRADED ASPHALT CONCRETE
OGFC	OPEN GRADED FRICTION COURSE
OH	OVERHEAD
OHWM	ORDINARY HIGH WATER MARK
O-O	OUT TO OUT
Opp	OPPOSITE
OSD	OVERSIDE DRAIN

P

P	PAGE
PAP	PERFORATED ALUMINUM PIPE
PB	PULL BOX
PC	POINT OF CURVATURE,
	PRECAST
PCC	POINT OF COMPOUND CURVE,
	PORTLAND CEMENT CONCRETE
PCMS	PORTABLE CHANGEABLE MESSAGE SIGN
PCP	PERFORATED CONCRETE PIPE,
	PRESTRESSED CONCRETE PIPE
PCVC	POINT OF COMPOUND VERTICAL CURVE
PEC	PERMIT TO ENTER AND CONSTRUCT
Ped	PEDESTRIAN
Ped OC	PEDESTRIAN OVERCROSSING
Ped UC	PEDESTRIAN UNDERCROSSING
Perm Mtl	PERMEABLE MATERIAL

P continued

PG	PROFILE GRADE
PI	POINT OF INTERSECTION
PJP	PARTIAL JOINT PENETRATION
Pkwy	PARKWAY
ℙ,PL	PLATE
P/L	PROPERTY LINE
PM	POST MILE,
	TIME FROM NOON TO MIDNIGHT
PN	PAVING NOTCH
POC	POINT OF HORIZONTAL CURVE
POT	POINT OF TANGENT
POVC	POINT OF VERTICAL CURVE
PP	PIPE PILE,
	PLASTIC PIPE,
	POWER POLE
PPL	PREFORMED PERMEABLE LINER
PPP	PERFORATED PLASTIC PIPE
PRC	POINT OF REVERSE CURVE
PRF	PAVEMENT REINFORCING FABRIC
PRVC	POINT OF REVERSE VERTICAL CURVE
PS&E	PLANS, SPECIFICATIONS AND ESTIMATES
PS, P/S	PRESTRESSED
PSP	PERFORATED STEEL PIPE
PT	POINT OF TANGENCY
PVC	POLYVINYL CHLORIDE
Pvmt	PAVEMENT

Q

Qty	QUANTITY

R

R	RADIUS
R & D	REMOVE AND DISPOSE
R & S	REMOVE AND SALVAGE
R/C	RATE OF CHANGE
RCA	REINFORCED CONCRETE ARCH
RCB	REINFORCED CONCRETE BOX
RCP	REINFORCED CONCRETE PIPE
RCPA	REINFORCED CONCRETE PIPE ARCH
Rd	ROAD
Reinf	REINFORCED,
	REINFORCEMENT,
	REINFORCING
Rel	RELOCATE
Repl	REPLACEMENT
Ret	RETAINING
Rev	REVISED, REVISION
Rdwy	ROADWAY
RHMA	RUBBERIZED HOT MIX ASPHALT
Riv	RIVER
RM	ROAD-MIXED
RP	RADIUS POINT,
	REFERENCE POINT
RR	RAILROAD
RSP	ROCK SLOPE PROTECTION,
	REVISED STANDARD PLAN
Rt	RIGHT
Rte	ROUTE
RW	REDWOOD,
	RETAINING WALL
R/W	RIGHT OF WAY
Rwy	RAILWAY

S

S	SOUTH,
	SUPPLEMENT
SAE	STRUCTURE APPROACH EMBANKMENT
Salv	SALVAGE
SAPP	STRUCTURAL ALUMINUM PLATE PIPE
SB	SOUTHBOUND
SC	SAND CUSHION
SCSP	SLOTTED CORRUGATED STEEL PIPE
SD	STORM DRAIN
Sec	SECOND,
	SECTION
Sep	SEPARATION
SG	SUBGRADE
Shld	SHOULDER
Sht	SHEET
Sim	SIMILAR
℄	STATION LINE
SM	SELECTED MATERIAL
Spec	SPECIAL,
	SPECIFICATIONS
SPP	SLOTTED PLASTIC PIPE
SS	SLOPE STAKE
SSBM	STRAP AND SADDLE BRACKET METHOD
SSD	STRUCTURAL SECTION DRAIN
SSPA	STRUCTURAL STEEL PLATE ARCH
SSPP	STRUCTURAL STEEL PLATE PIPE
SSPPA	STRUCTURAL STEEL PLATE PIPE ARCH
SSRP	STEEL SPIRAL RIB PIPE
St	STREET
Sta	STATION
STBB	SINGLE THRIE BEAM BARRIER
Std	STANDARD
Str	STRUCTURE
Surf	SURFACING
SW	SIDEWALK,
	SOUND WALL
Swr	SEWER
Sym	SYMMETRICAL
S4S	SURFACE 4 SIDES

T

T	SEMI-TANGENT
Tan	TANGENT
TBB	THRIE BEAM BARRIER
Tbr	TIMBER
TC	TOP OF CURB
TCB	TRAFFIC CONTROL BOX
TCE	TEMPORARY CONSTRUCTION EASEMENT
Tel	TELEPHONE
Temp	TEMPORARY
TG	TOP OF GRADE
Tot	TOTAL
TP	TELEPHONE POLE
TPB	TREATED PERMEABLE BASE
TPM	TREATED PERMEABLE MATERIAL
Trans	TRANSITION

T continued

TS	TRANSVERSE,
	TRAFFIC SIGNAL,
	TUBULAR STEEL
Typ	TYPICAL

U

UC	UNDERCROSSING
UD	UNDERDRAIN
UG	UNDERGROUND
UON	UNLESS OTHERWISE NOTED
UP	UNDERPASS

V

V	VALVE,
	DESIGN SPEED
Var	VARIABLE,
	VARIES
VC	VERTICAL CURVE
VCP	VITRIFIED CLAY PIPE
Vert	VERTICAL
Via	VIADUCT
Vol	VOLUME

W

W	WEST,
	WIDTH
WB	WESTBOUND
WH	WEEP HOLE
WM	WIRE MESH
WS	WATER SURFACE
WSP	WELDED STEEL PIPE
Wt	WEIGHT
WV	WATER VALVE
WW	WINGWALL
WWLOL	WINGWALL LAYOUT LINE

X

X Sec	CROSS SECTION
Xing	CROSSING

Y

Yr	YEAR
Yrs	YEARS

Dist	COUNTY	ROUTE	POST MILES TOTAL PROJECT	SHEET No.	TOTAL SHEETS
02	Sha	299	0.3/7.1	370	401

Grace M. Tsushima
REGISTERED CIVIL ENGINEER

July 19, 2013
PLANS APPROVAL DATE

REGISTERED PROFESSIONAL ENGINEER Grace M. Tsushima No. C49814 Exp. 9-30-14 CIVIL STATE OF CALIFORNIA

THE STATE OF CALIFORNIA OR ITS OFFICERS OR AGENTS SHALL NOT BE RESPONSIBLE FOR THE ACCURACY OR COMPLETENESS OF SCANNED COPIES OF THIS PLAN SHEET.

TO ACCOMPANY PLANS DATED 06-09-14

UNIT OF MEASUREMENT SYMBOLS:

Some of the symbols used in the project plan quantity tables and in the Bid Item List are:

TABLE A

SYMBOL USED	DEFINITIONS
ACRE	ACRE
CF	CUBIC FOOT
CY	CUBIC YARD
EA	EACH
GAL	GALLON
LB	POUND
LF	LINEAR FOOT
SQFT	SQUARE FOOT
SQYD	SQUARE YARD
STA	100 FEET
TAB	TABLET
TON	2,000 POUNDS

Some of the symbols used in the plans other than in the project plan quantity tables are:

TABLE B

SYMBOL USED	DEFINITIONS
ksi	KIPS PER SQUARE INCH
ksf	KIPS PER SQUARE FOOT
psi	POUNDS PER SQUARE INCH
psf	POUNDS PER SQUARE FOOT
lb/ft^3, pcf	POUNDS PER CUBIC FOOT
tsf	TONS PER SQUARE FOOT
mph, MPH *	MILES PER HOUR
ø	NOMINAL DIAMETER
oz	OUNCE
lb	POUND
kip	1,000 POUNDS
cal	CALORIE
ft	FOOT OR FEET
gal	GALLON

* For use on a sign panel only

STATE OF CALIFORNIA
DEPARTMENT OF TRANSPORTATION

ABBREVIATIONS (SHEET 2 OF 2)

NO SCALE

RSP A10B DATED JULY 19, 2013 SUPERSEDES STANDARD PLAN A10B DATED MAY 20, 2011 - PAGE 2 OF THE STANDARD PLANS BOOK DATED 2010.

REVISED STANDARD PLAN RSP A10B

2010 REVISED STANDARD PLAN RSP A10B

DATE PLOTTED => 25-AUG-2014
TIME PLOTTED => 09:25

Dist	COUNTY	ROUTE	POST MILES TOTAL PROJECT	SHEET No.	TOTAL SHEETS
02	Sha	299	0.3/7.1	371	401

REGISTERED CIVIL ENGINEER

April 20, 2012
PLANS APPROVAL DATE

REGISTERED PROFESSIONAL ENGINEER
Roberta L. McLaughlin
No. C40375
Exp. 3-31-13
CIVIL
STATE OF CALIFORNIA

THE STATE OF CALIFORNIA OR ITS OFFICERS OR AGENTS SHALL NOT BE RESPONSIBLE FOR THE ACCURACY OR COMPLETENESS OF SCANNED COPIES OF THIS PLAN SHEET.

TO ACCOMPANY PLANS DATED 06-09-14

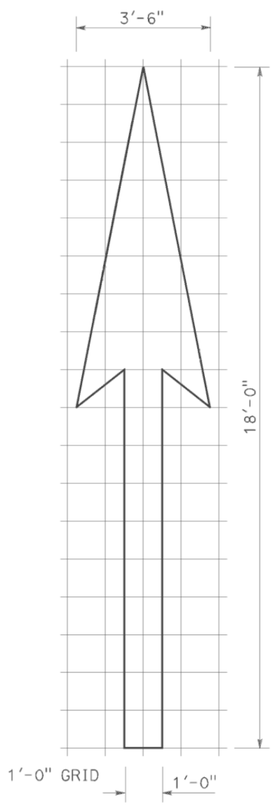

A=25 ft^2

TYPE I 18'-0" ARROW

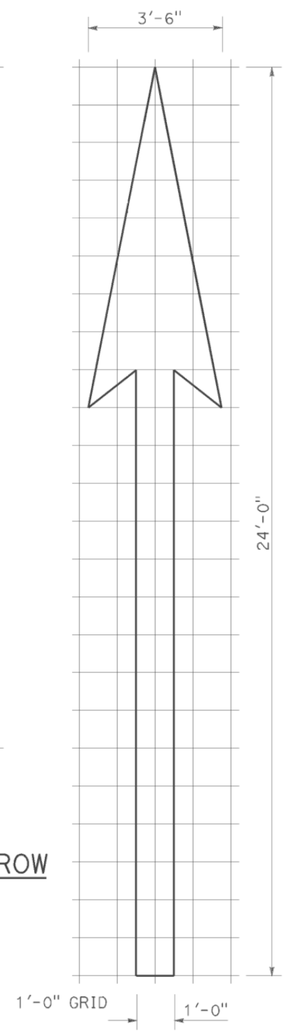

A=31 ft^2

TYPE I 24'-0" ARROW

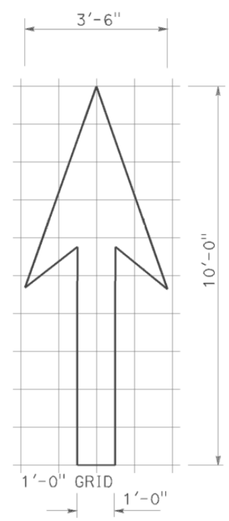

A=14 ft^2

TYPE I 10'-0" ARROW

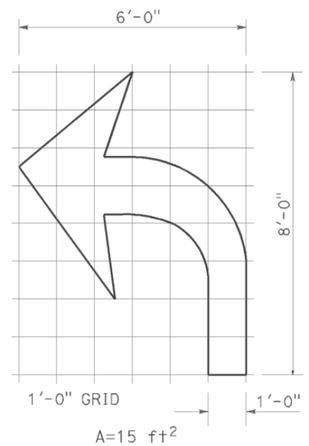

A=15 ft^2

TYPE IV (L) ARROW

(For Type IV (R) arrow, use mirror image)

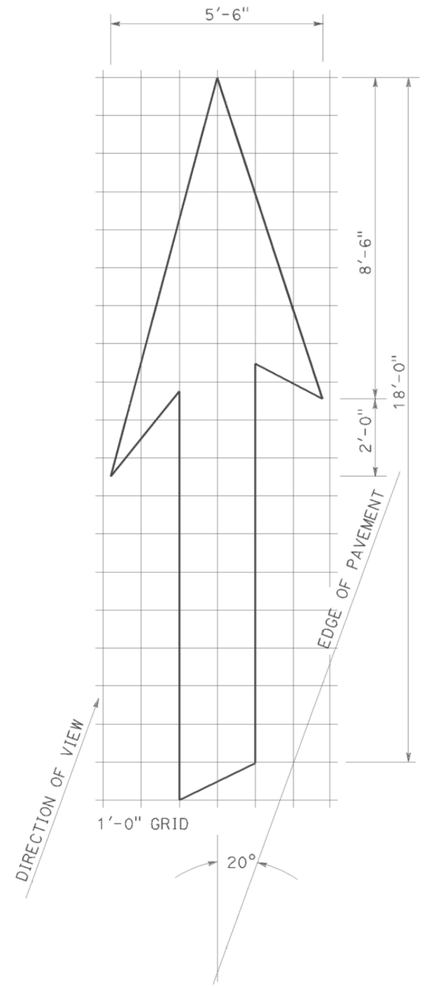

A=42 ft^2

TYPE VI ARROW

Right lane drop arrow
(For left lane, use mirror image)

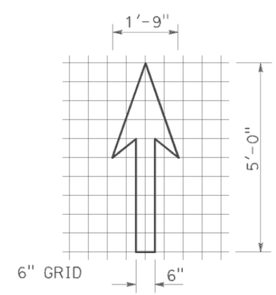

A=3.5 ft^2

BIKE LANE ARROW

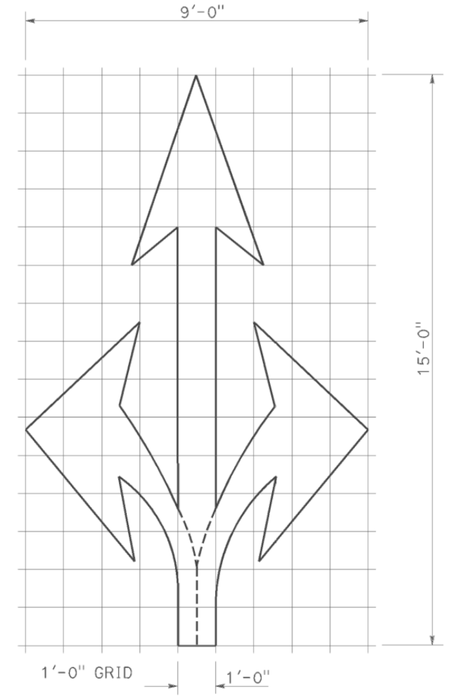

A=36 ft^2

TYPE VIII ARROW

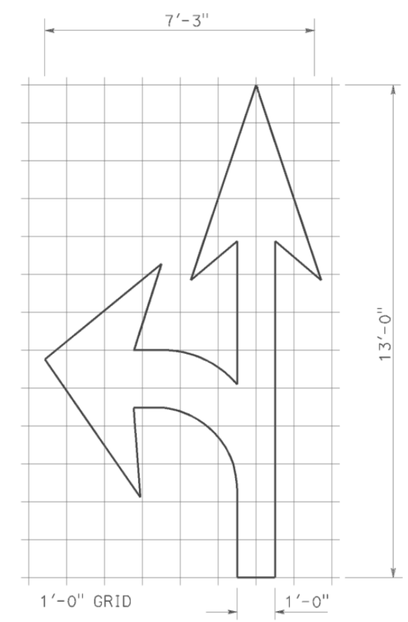

A=27 ft^2

TYPE VII (L) ARROW

(For Type VII (R) arrow, use mirror image)

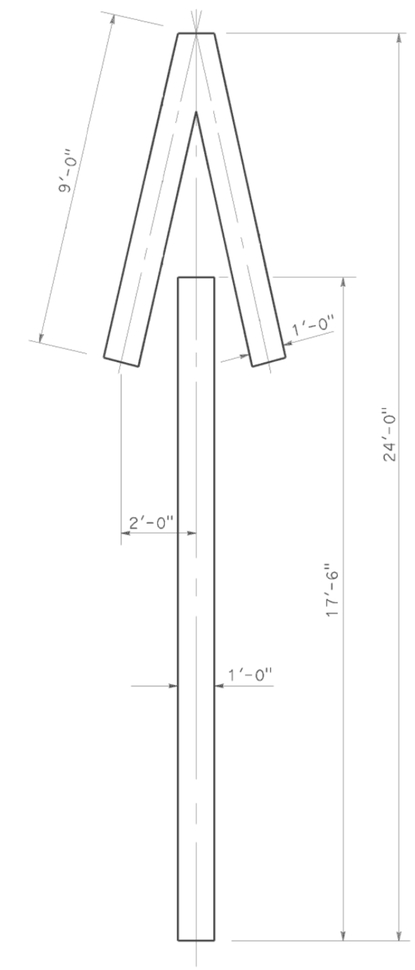

A=33 ft^2

TYPE V ARROW

NOTE:
Minor variations in dimensions may be accepted by the Engineer.

STATE OF CALIFORNIA
DEPARTMENT OF TRANSPORTATION

PAVEMENT MARKINGS ARROWS

NO SCALE

RSP A24A DATED APRIL 20, 2012 SUPERSEDES STANDARD PLAN A24A DATED MAY 20, 2011 - PAGE 13 OF THE STANDARD PLANS BOOK DATED 2010.

REVISED STANDARD PLAN RSP A24A

2010 REVISED STANDARD PLAN RSP A24A

DATE PLOTTED => 25-AUG-2014
TIME PLOTTED => 09:26

Dist	COUNTY	ROUTE	POST MILES TOTAL PROJECT	SHEET No.	TOTAL SHEETS
02	Sha	299	0.3/7.1	372	401

REGISTERED CIVIL ENGINEER

July 20, 2012
PLANS APPROVAL DATE

REGISTERED PROFESSIONAL ENGINEER
Roberta L. McLaughlin
No. C40375
Exp. 3-31-13
CIVIL
STATE OF CALIFORNIA

THE STATE OF CALIFORNIA OR ITS OFFICERS OR AGENTS SHALL NOT BE RESPONSIBLE FOR THE ACCURACY OR COMPLETENESS OF SCANNED COPIES OF THIS PLAN SHEET.

TO ACCOMPANY PLANS DATED 06-09-14

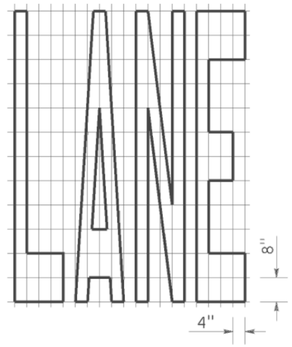

A=24 ft²

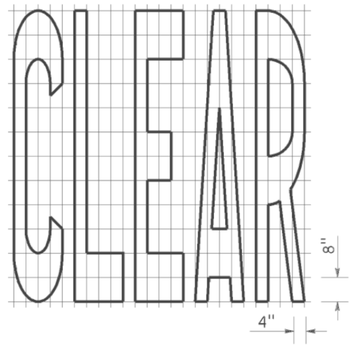

A=27 ft²

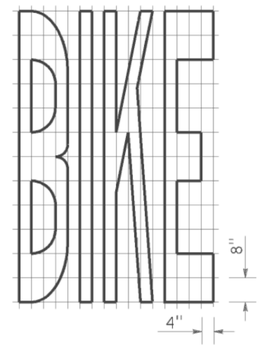

A=21 ft²

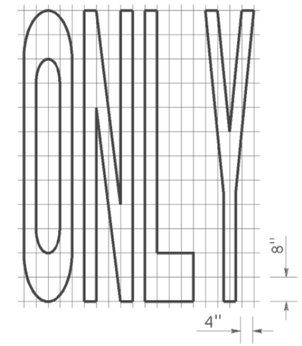

A=22 ft²

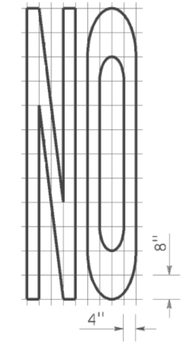

A=14 ft²

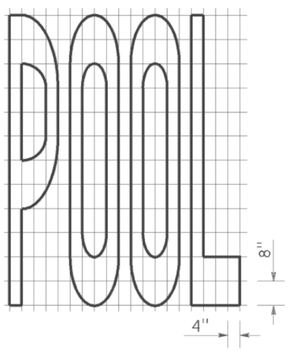

A=23 ft²

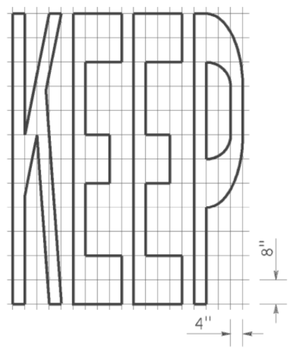

A=24 ft²

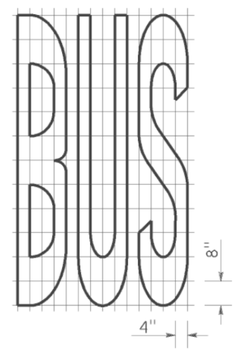

A=20 ft²

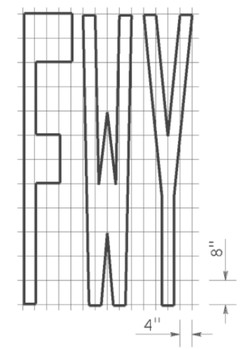

A=16 ft²

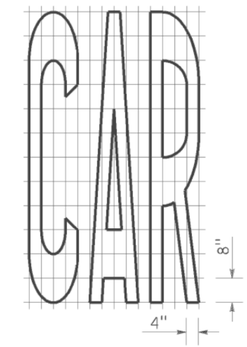

A=17 ft²

WORD MARKINGS			
ITEM	ft²	ITEM	ft²
LANE	24	NO	14
POOL	23	BIKE	21
CAR	17	BUS	20
CLEAR	27	ONLY	22
KEEP	24	FWY	16

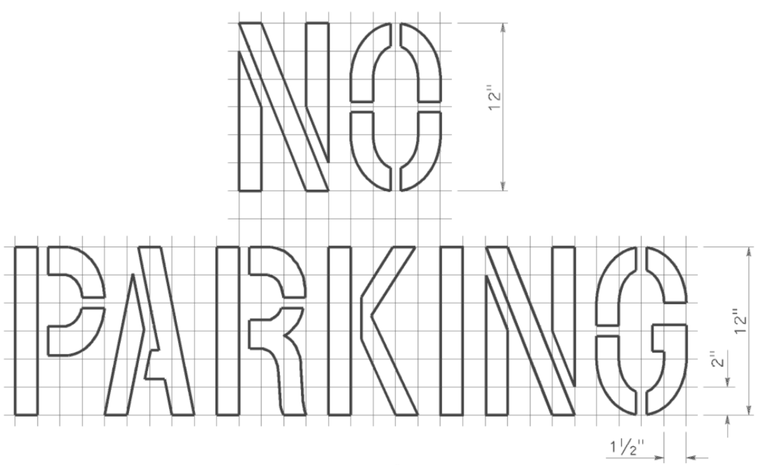

A=2 ft²
See Notes 6 and 7

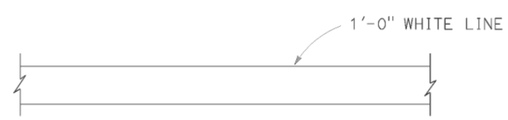

LIMIT LINE (STOP LINE)

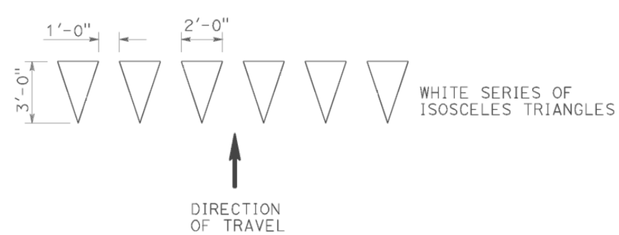

YIELD LINE

NOTES:

1. If a message consists of more than one word, it should read "UP", i.e., the first word should be nearest the driver.
2. The space between words should be at least four times the height of the characters for low speed roads, but not more than ten times the height of the characters. The space may be reduced appropriately where there is limited space because of local conditions.
3. Minor variations in dimensions may be accepted by the Engineer.
4. Portions of a letter, number or symbol may be separated by connecting segments not to exceed 2" in width.
5. The words "NO PARKING" pavement marking is to be used for parking facilities. For typical locations of markings, see Standard Plans A90A and A90B.
6. The words "NO PARKING", shall be painted in white letters no less than 1'-0" high on a contrasting background and located so that it is visible to traffic enforcement officials.

STATE OF CALIFORNIA
DEPARTMENT OF TRANSPORTATION

PAVEMENT MARKINGS WORDS, LIMIT AND YIELD LINES

NO SCALE

RSP A24E DATED JULY 20, 2012 SUPERSEDES STANDARD PLAN A24E
DATED MAY 20, 2011 - PAGE 17 OF THE STANDARD PLANS BOOK DATED 2010.

REVISED STANDARD PLAN RSP A24E

2010 REVISED STANDARD PLAN RSP A24E

DATE PLOTTED => 25-AUG-2014
TIME PLOTTED => 09:26

Dist	COUNTY	ROUTE	POST MILES TOTAL PROJECT	SHEET No.	TOTAL SHEETS
02	Sha	299	0.3/7.1	373	401

Randell D. Hiatt
REGISTERED CIVIL ENGINEER

July 19, 2013
PLANS APPROVAL DATE

REGISTERED PROFESSIONAL ENGINEER
Randell D. Hiatt
No. C50200
Exp. 6-30-15
CIVIL
STATE OF CALIFORNIA

THE STATE OF CALIFORNIA OR ITS OFFICERS OR AGENTS SHALL NOT BE RESPONSIBLE FOR THE ACCURACY OR COMPLETENESS OF SCANNED COPIES OF THIS PLAN SHEET.

TO ACCOMPANY PLANS DATED 06-09-14

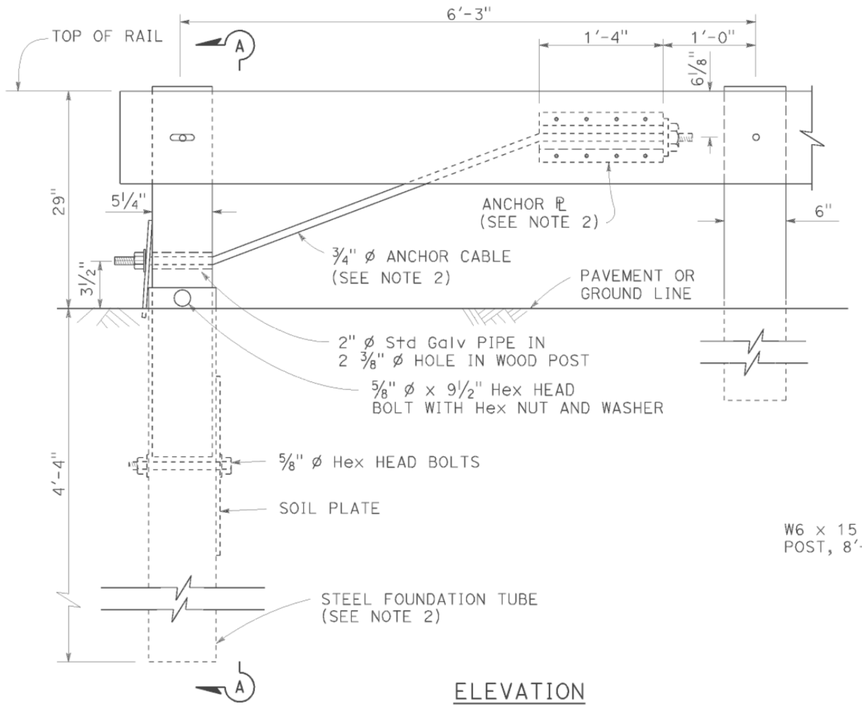

ELEVATION
END ANCHOR
ASSEMBLY (TYPE SFT)

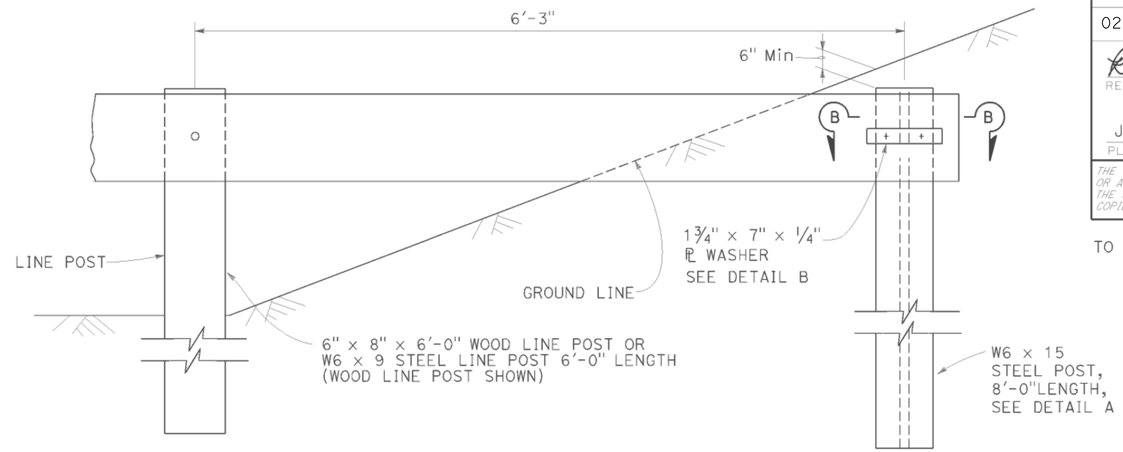

BURIED POST END ANCHOR

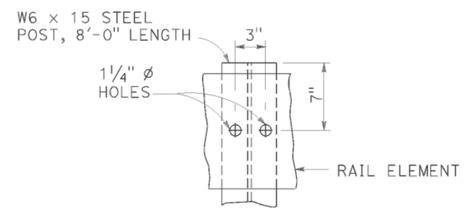

DETAIL A

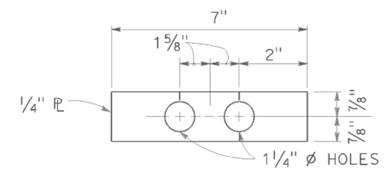

DETAIL B

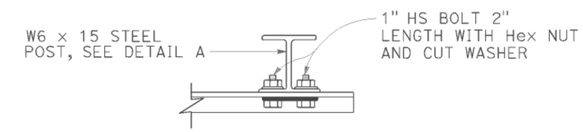

SECTION B-B

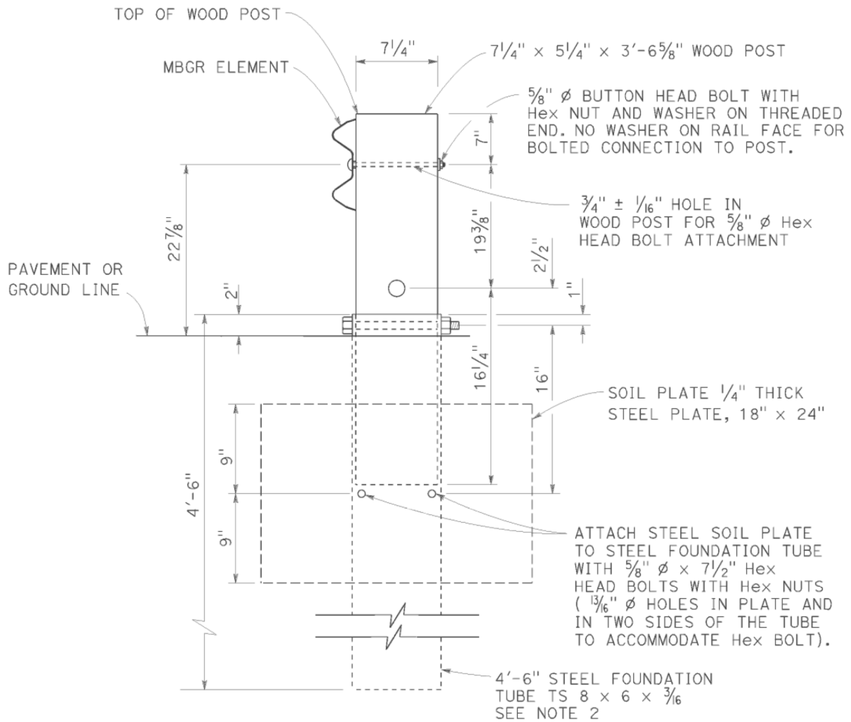

SECTION A-A

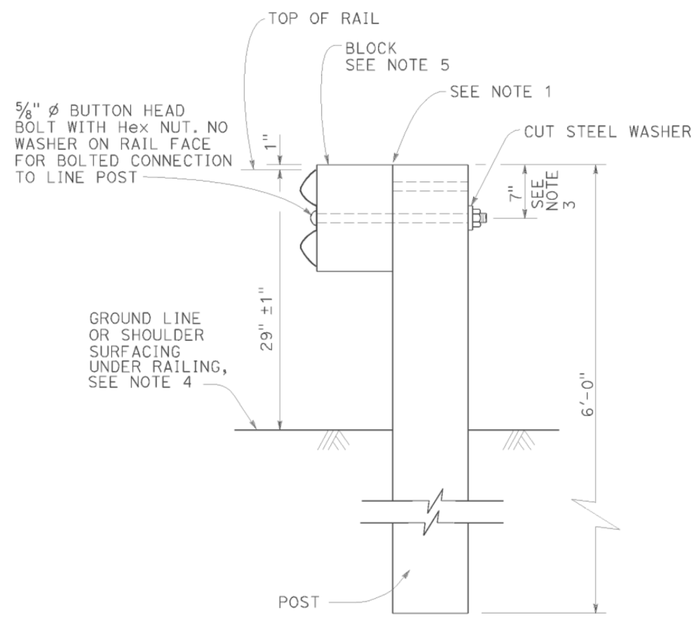

TYPICAL LINE
POST INSTALLATION

NOTES:

1. For wood post and wood block, toenail with 2-16d Galv nails in top of block. For steel post and notched wood or plastic block, notched face of block faces steel post.
2. A 6'-0" Length steel foundation tube, TS 8 x 6 x 3/16, without a soil plate, may be furnished and installed in place of the 4'-6" length steel foundation tube and soil plate shown, Minimum embadment of the 6'-0" length tube shall be 5'-9". A 5/8" ø Hex head bolt and nut shall be installed in the hole in the 6'-0" length tube to keep the wood post from dropping into the tube.
3. To connect railing to 27" terminal system end treatment, transition the top of railing height at a ratio of 120:1 to terminal system end treatment height plus one 12'-6" standard railing section at the transitioned height for a horizontal connection to the end treatment.
4. Install posts in soil.
5. See Revised Standard Plans RSP A77N1 and RSP A77N2 for details.
6. Holes excavation in the slope to construct the buried post end anchor shall be backfilled with selected earth, placed in layers approximately 1'-0" thick. Each layer shall be moistened and thoroughly compacted.

STATE OF CALIFORNIA
DEPARTMENT OF TRANSPORTATION

METAL BEAM GUARD RAILING RECONSTRUCT INSTALLATION

NO SCALE

RSP A77L3 DATED JULY 19, 2013 SUPPLEMENTS THE STANDARD PLANS BOOK DATED 2010.

REVISED STANDARD PLAN RSP A77L3

2010 REVISED STANDARD PLAN RSP A77L3

DATE PLOTTED => 25-AUG-2014
TIME PLOTTED => 09:26

Dist	COUNTY	ROUTE	POST MILES TOTAL PROJECT	SHEET No.	TOTAL SHEETS
02	Sha	299	0.3/7.1	374	401

REGISTERED CIVIL ENGINEER

July 19, 2013
PLANS APPROVAL DATE

REGISTERED PROFESSIONAL ENGINEER
Michael Janzen
No. 44788
Exp. 03-31-14
CIVIL
STATE OF CALIFORNIA

THE STATE OF CALIFORNIA OR ITS OFFICERS OR AGENTS SHALL NOT BE RESPONSIBLE FOR THE ACCURACY OR COMPLETENESS OF SCANNED COPIES OF THIS PLAN SHEET.

TO ACCOMPANY PLANS DATED 06-09-14

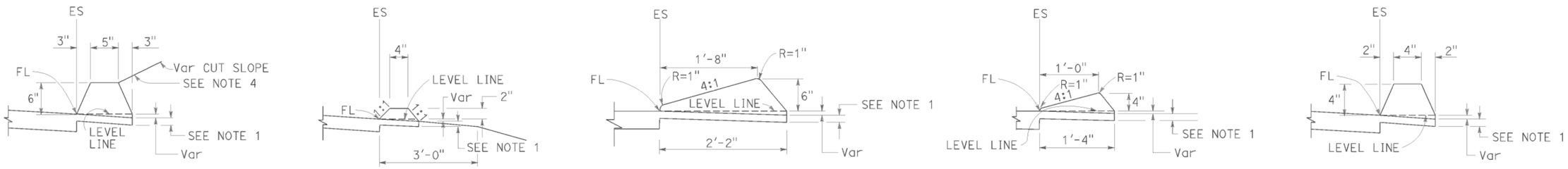

TYPE A
See Note 3

TYPE C

TYPE D

TYPE E

TYPE F
See Note 5

DIKES

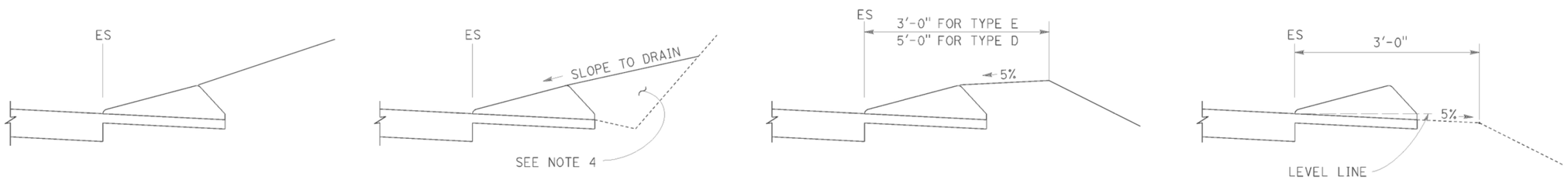

CASE C-1
Cut Slope

CASE C-2
Cut Slope

CASE F

CASE R
See Note 2

TYPE D AND E BACKFILL DETAILS

NOTES:

1. For HMA shoulders only, extend top layer of HMA placed on the shoulder under dike with no joint at the ES. For projects with OGFC shoulders, do not extend OGFC under dike. See project plans for modified dike detail.
2. Case R applies to retrofit only projects where restrictive conditions do not provide enough width for Case F backfill.
3. Type A dike only to be used where restrictive slope conditions do not provide enough width to use Type D or Type E dike.
4. Fill and compact with excavated material to top of dike.
5. Use Type F dike, where dike is required with guard railing installations. See Revised Standard Plan RSP A77N4 for dike positioning details.

DIKE QUANTITIES

TYPE	CUBIC YARDS PER LINEAR FOOT
A	0.0135
C	0.0038
D	0.0293
E	0.0130
F	0.0066

Quantities based on 5% cross slope.

STATE OF CALIFORNIA
DEPARTMENT OF TRANSPORTATION

HOT MIX ASPHALT DIKES

NO SCALE

RSP A87B DATED JULY 19, 2013 SUPERSEDES STANDARD PLAN A87B
DATED MAY 20, 2011 - PAGE 120 OF THE STANDARD PLANS BOOK DATED 2010.

REVISED STANDARD PLAN RSP A87B

2010 REVISED STANDARD PLAN RSP A87B

DATE PLOTTED => 25-AUG-2014
TIME PLOTTED => 09:26

DIST	COUNTY	ROUTE	POST MILES TOTAL PROJECT	SHEET No.	TOTAL SHEETS
02	Sha	299	0.3/7.1	375	401

REGISTERED CIVIL ENGINEER

November 15, 2013
PLANS APPROVAL DATE

REGISTERED PROFESSIONAL ENGINEER Cornelis M. Hakim No. C55610 Exp. 12-31-14 CIVIL STATE OF CALIFORNIA

THE STATE OF CALIFORNIA OR ITS OFFICERS OR AGENTS SHALL NOT BE RESPONSIBLE FOR THE ACCURACY OR COMPLETENESS OF SCANNED COPIES OF THIS PLAN SHEET.

TO ACCOMPANY PLANS DATED 06-09-14

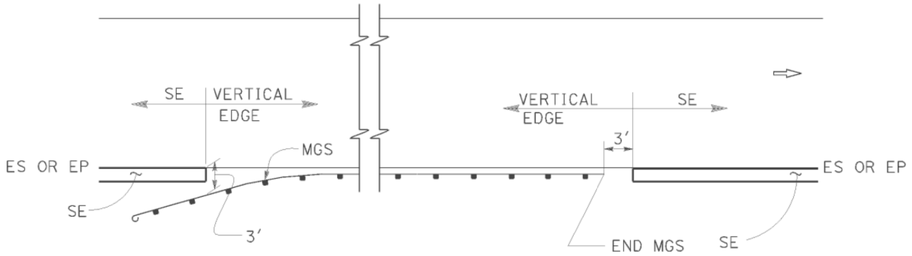

MGS

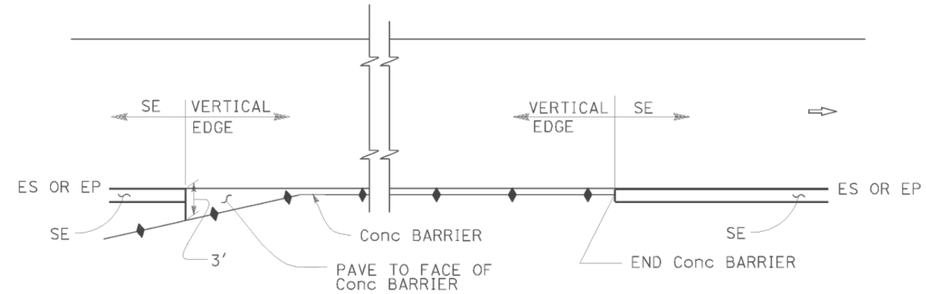

CONCRETE BARRIER

ABBREVIATIONS:

SE SAFETY EDGE

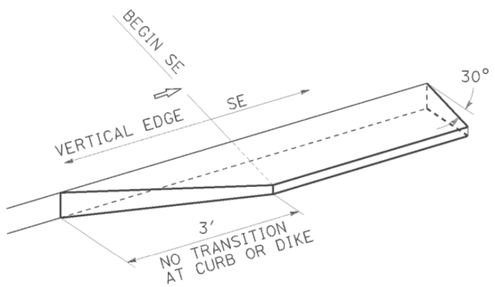

TRANSITION DETAIL FOR CONCRETE ONLY

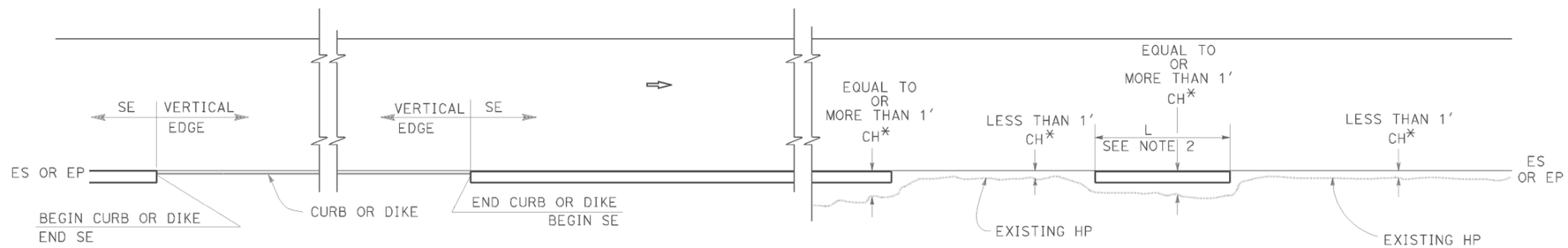

CURB OR DIKE

NARROW SIDE SLOPE

* CH = Distance from ES or EP to existing HP.

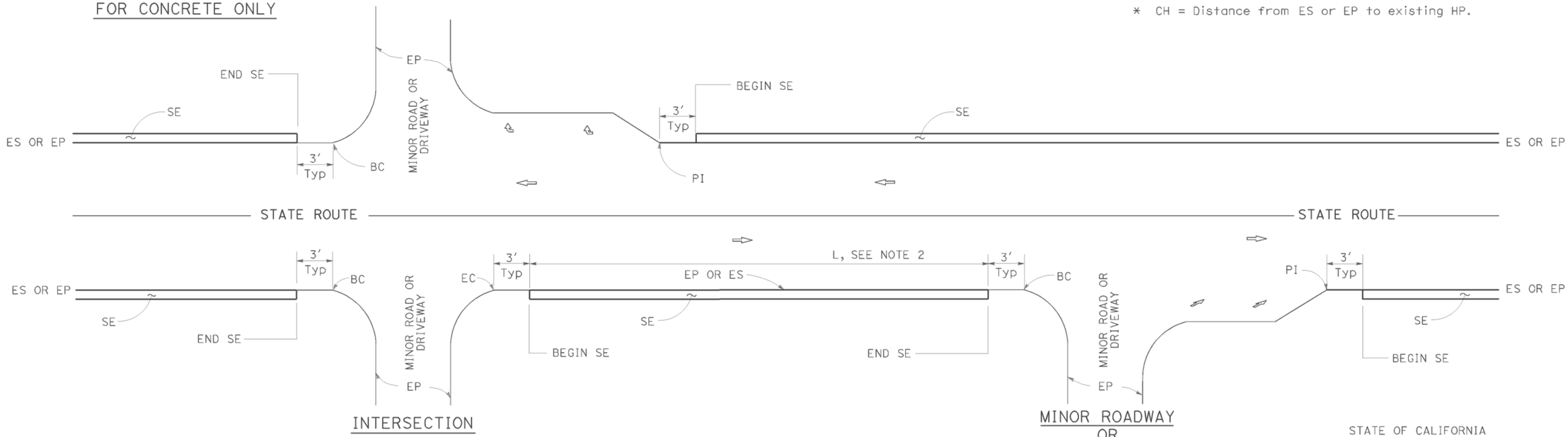

INTERSECTION

MINOR ROADWAY OR DRIVEWAY

DRIVEWAY AND INTERSECTION

NOTES:

1. For details not shown, see Revised Standard Plans RSP P75 and RSP P76.
2. Safety edge is optional when L is less than 30'.

STATE OF CALIFORNIA
DEPARTMENT OF TRANSPORTATION

PAVEMENT EDGE TREATMENTS

NO SCALE

RSP P74 DATED NOVEMBER 15, 2013 SUPERSEDES RSP P74 DATED JANUARY 20, 2012 THAT SUPPLEMENTS THE STANDARD PLANS BOOK DATED 2010.

REVISED STANDARD PLAN RSP P74

2010 REVISED STANDARD PLAN RSP P74

DATE PLOTTED => 25-AUG-2014
TIME PLOTTED => 09:26

DIST	COUNTY	ROUTE	POST MILES TOTAL PROJECT	SHEET No.	TOTAL SHEETS
02	Sha	299	0.3/7.1	376	401

REGISTERED CIVIL ENGINEER

November 15, 2013
PLANS APPROVAL DATE

REGISTERED PROFESSIONAL ENGINEER
Cornelis M. Hakim
No. C55610
Exp. 12-31-14
CIVIL
STATE OF CALIFORNIA

THE STATE OF CALIFORNIA OR ITS OFFICERS OR AGENTS SHALL NOT BE RESPONSIBLE FOR THE ACCURACY OR COMPLETENESS OF SCANNED COPIES OF THIS PLAN SHEET.

TO ACCOMPANY PLANS DATED 06-09-14

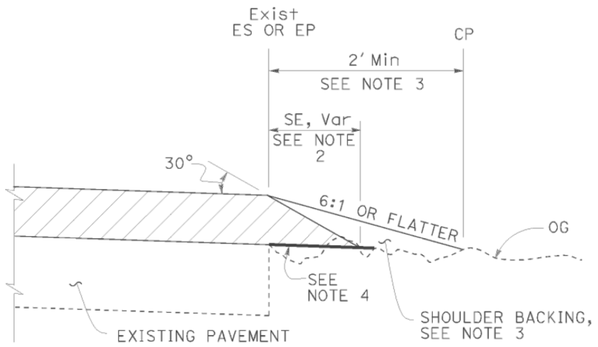

CASE A
Safety Edge

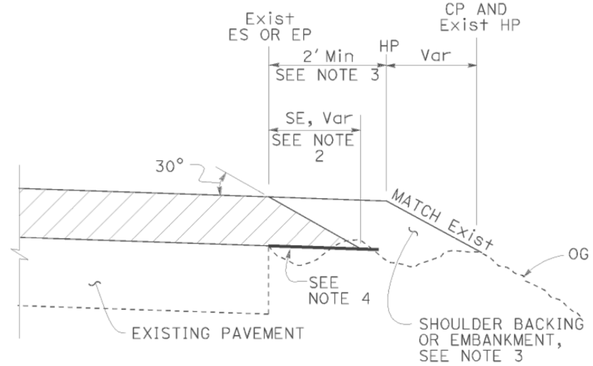

CASE B
Safety Edge

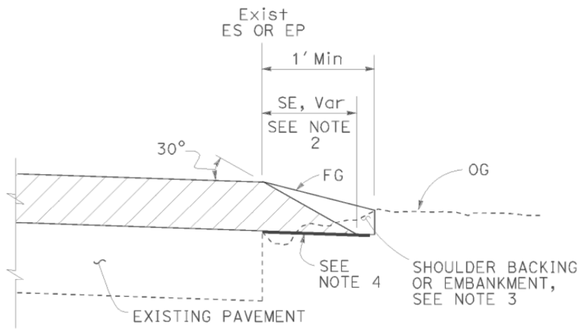

CASE C
Safety Edge

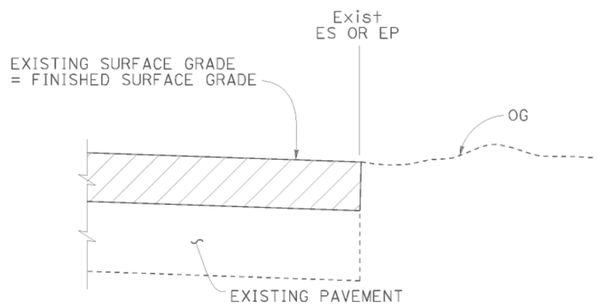

CASE D
Vertical Edge

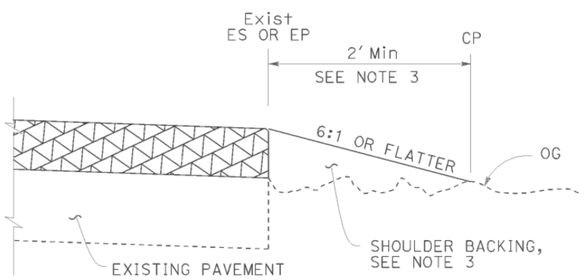

CASE E
Vertical Edge

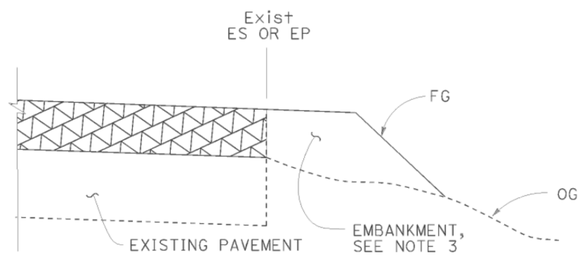

CASE F
Vertical Edge
* See Table A and Revised Std Plan RSP P74

LEGEND:

- HMA OVERLAY
- HMA OR CONCRETE OVERLAY
- CONCRETE OVERLAY

ABBREVIATIONS:

SE SAFETY EDGE
TT TOTAL THICKNESS OF SE

TABLE A
EDGE TREATMENT FOR VARIOUS OVERLAY THICKNESS AND CONDITIONS

	OVERLAY THICKNESS	
FIELD CONDITION	LESS THAN 0.15'	0.15' OR MORE
Exist SLOPE 6:1 OR FLATTER	CASE E	CASE A
Exist SLOPE 3:1 TO 6:1	CASE E	CASE B
Exist SLOPE STEEPER THAN 3:1	CASE F	CASE F
CUT SECTION (REPLACE, COLD PLANE, MILL PAVEMENT)	CASE D	CASE C

ADDITIONAL HMA OR CONCRETE QUANTITIES FOR SE/SIDE/MILE

TYPICAL CROSS SECTION	TT	TOTAL ADDITIONAL MATERIAL FOR SE/SIDE/MILE		
		HMA (TON)	CONCRETE (CY)*	CONCRETE (CY)**
TT	0.15'	NA	NA	NA
	0.20'	13.7	NA	NA
	0.30'	30.9	NA	NA
	0.40'	54.9	NA	NA
	0.45'	69.4	NA	NA
TT 0.43'	0.50'	84.2	NA	NA
	0.60'	113.9	NA	NA
	0.70'	143.6	70.9	94.2
	0.80'	173.3	85.6	112.2
	0.90'	203.0	100.3	130.2
	1.00'	232.7	114.9	148.2
	1.10'	262.4	129.6	166.2
	1.20'	292.1	144.3	184.2

* For Detail "A"
** For Optional Detail "A"

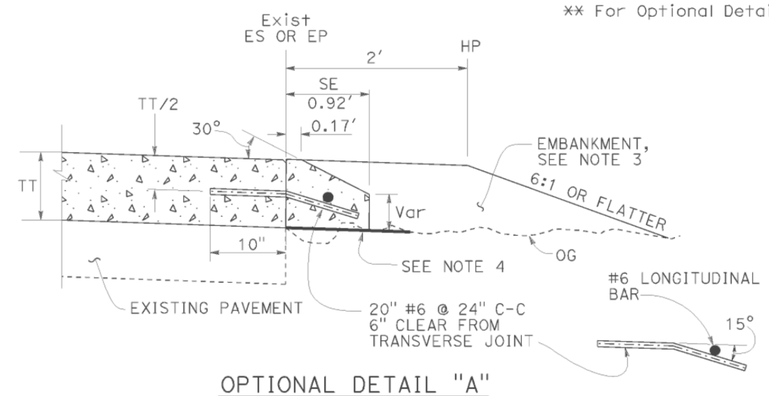

OPTIONAL DETAIL "A"
For concrete overlay
See Note 5

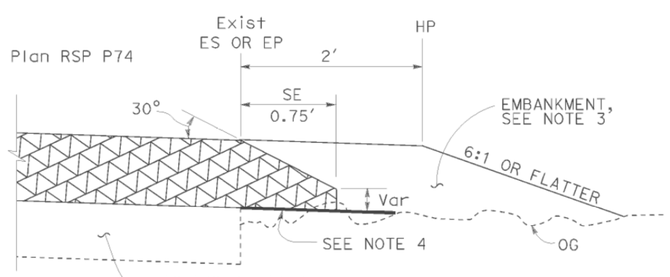

DETAIL "A"
For HMA overlay thickness more than 0.43' or concrete overlay

NOTES:

1. For limits of safety edge and vertical edge treatments, see Revised Standard Plan RSP P74.
2. Details shown for HMA overlay thickness less than 0.43'. See Detail "A" for HMA overlay thickness more than 0.43' or concrete overlay.
3. For locations and limits of shoulder backing or embankment see project plans.
4. Grade existing ground to place safety edge. 1' minimum width
5. Safety edge transverse joint must match overlay transverse joint. End of #6 longitudinal bar must be 2" ±½" clear from transverse joint.
6. Safety edge is not needed in the area of MGS, barrier, right turn lane and acceleration lane. See Revised Standard Plan RSP P74.

STATE OF CALIFORNIA
DEPARTMENT OF TRANSPORTATION

PAVEMENT EDGE TREATMENTS-OVERLAYS

NO SCALE

RSP P75 DATED NOVEMBER 15, 2013 SUPERSEDES RSP P75 DATED JANUARY 20, 2012 THAT SUPPLEMENTS THE STANDARD PLANS BOOK DATED 2010.

REVISED STANDARD PLAN RSP P75

2010 REVISED STANDARD PLAN RSP P75

DATE PLOTTED => 25-AUG-2014
TIME PLOTTED => 09:26

DIST	COUNTY	ROUTE	POST MILES TOTAL PROJECT	SHEET No.	TOTAL SHEETS
02	Sha	299	0.3/7.1	377	401

REGISTERED CIVIL ENGINEER

November 15, 2013
PLANS APPROVAL DATE

REGISTERED PROFESSIONAL ENGINEER
Cornelis M. Hakim
No. C55610
Exp. 12-31-14
CIVIL
STATE OF CALIFORNIA

THE STATE OF CALIFORNIA OR ITS OFFICERS OR AGENTS SHALL NOT BE RESPONSIBLE FOR THE ACCURACY OR COMPLETENESS OF SCANNED COPIES OF THIS PLAN SHEET.

TO ACCOMPANY PLANS DATED 06-09-14

LEGEND:

- HMA PAVEMENT
- HMA OR CONCRETE PAVEMENT
- CONCRETE PAVEMENT

ABBREVIATIONS:

SE SAFETY EDGE
TT TOTAL THICKNESS OF SE
HW HINGE WIDTH, DISTANCE FROM ES OR EP TO HP

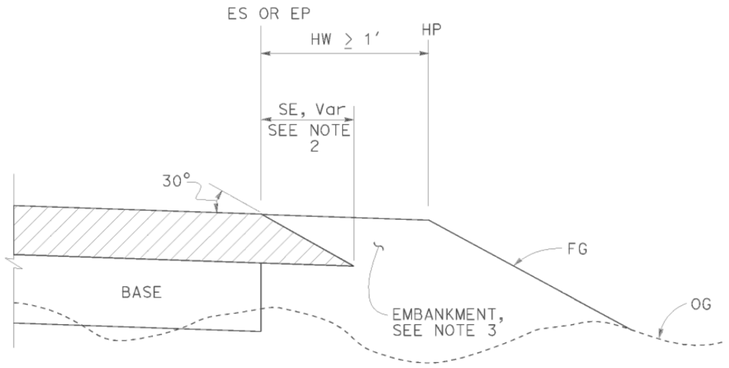

CASE K
Safety Edge - Fill Section, HW ≥ 1′

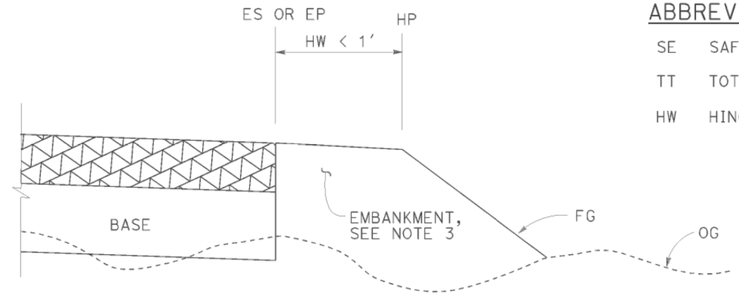

CASE L
Vertical Edge - Fill Section, HW < 1′

FILL SECTION

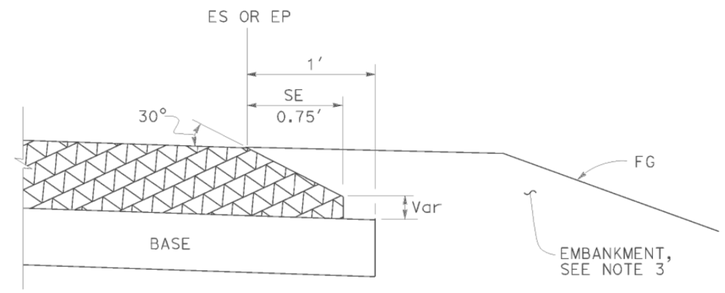

DETAIL "B"
For HMA pavement thickness more than 0.43′ or concrete pavement

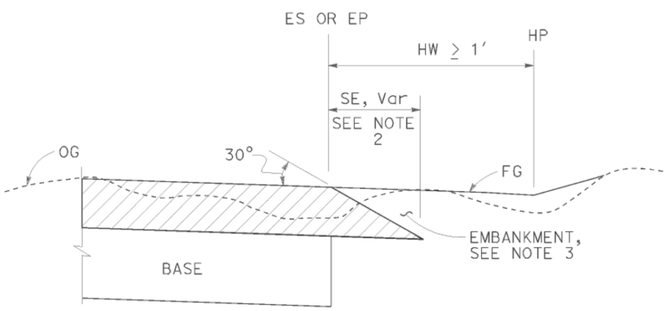

CASE M
Safety Edge - Cut Section, HW ≥ 1′

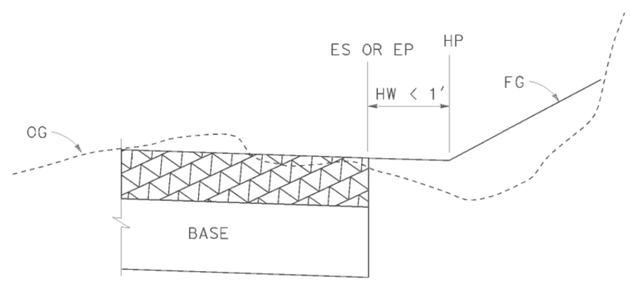

CASE N
Vertical Edge - Cut Section, HW < 1′

CUT SECTION

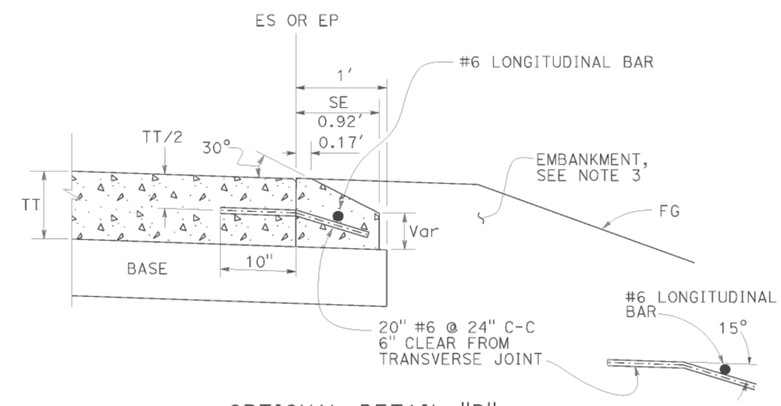

OPTIONAL DETAIL "B"
For concrete pavement
See Note 4

NOTES:

1. For limits of safety edge and vertical edge treatments, see Revised Standard Plan RSP P74
2. Details shown for HMA pavement thickness less than 0.43′. See Detail "B" for HMA pavement thickness more than 0.43′ or concrete pavement.
3. For locations and limits of embankment see project plans.
4. Safety edge transverse joint must match pavement transverse joint. End of #6 longitudinal bar must be 2" ±½" clear from transverse joint.
5. Safety edge is not needed in the area of MGS, barrier, right turn lane and acceleration lane. See Revised Standard Plan RSP P74.

STATE OF CALIFORNIA
DEPARTMENT OF TRANSPORTATION

PAVEMENT EDGE TREATMENTS-NEW CONSTRUCTION

NO SCALE

RSP P76 DATED NOVEMBER 15, 2013 SUPERSEDES RSP P76 DATED JANUARY 20, 2012 THAT SUPPLEMENTS THE STANDARD PLANS BOOK DATED 2010.

REVISED STANDARD PLAN RSP P76

2010 REVISED STANDARD PLAN RSP P76

DATE PLOTTED => 25-AUG-2014
TIME PLOTTED => 09:26

TO ACCOMPANY PLANS DATED 06-09-14

Dist	COUNTY	ROUTE	POST MILES TOTAL PROJECT	SHEET No.	TOTAL SHEETS
02	Sha	299	0.3/7.1	378	397

REGISTERED CIVIL ENGINEER

October 19, 2012
PLANS APPROVAL DATE

REGISTERED PROFESSIONAL ENGINEER Glenn DeCou No. C34547 Exp. 9-30-13 CIVIL STATE OF CALIFORNIA

THE STATE OF CALIFORNIA OR ITS OFFICERS OR AGENTS SHALL NOT BE RESPONSIBLE FOR THE ACCURACY OR COMPLETENESS OF SCANNED COPIES OF THIS PLAN SHEET.

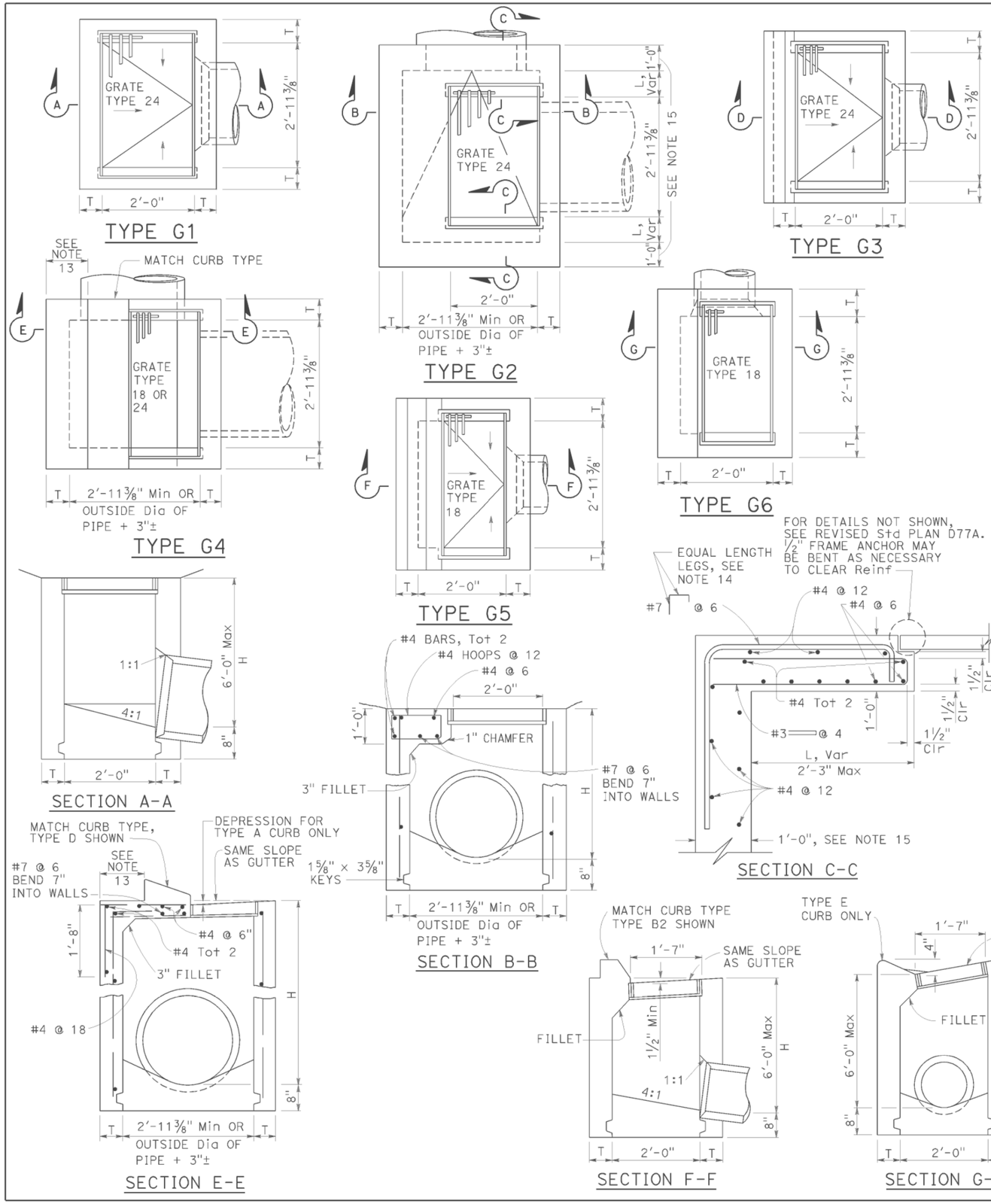

NOTES:

1. "H" is the difference in elevation between the outlet pipe flow line and the normal gutter grade line undepressed.
2. For "T" wall thickness, see Table A below.
3. Wall reinforcing not required when "H" is 8'-0" or less and the unsupported width or length is 7'-0" or less. Walls exceeding these limits shall be reinforced with #4 bars @ 1'-6" ± centers placed 1½" clear to inside of box unless otherwise shown.
4. Inlet bottom reinforcing not required. See Standard Plan D74C for alternative reinforced bottom and alternative half round bottom.
5. Steps-None required where "H" is less than 2'-6". Where "H" is 2'-6" or more, install steps with lowest rung 1'-0" above the floor and highest rung not more than 6" below top of inlet. The distance between steps shall not exceed 1'-0" and shall be uniform throughout the length of the wall. Place steps in the wall without an opening. Steps inserts may be substituted for the bar steps. Step inserts shall comply with State Industrial Safety requirements. See Standard Plan D74C for step details.
6. Details shown apply to both metal and concrete pipe.
7. Pipe(s) can be placed in any wall.
8. Curb section shall match adjacent curb.
9. Basin floors shall have wood trowel finish and a minimum slope of 12:3 from all directions toward outlet pipe.
10. Set inlet so that grate bars are parallel to direction of principal surface flow.
11. See Revised Standard Plans D77A and D77B for grate and frame details and weights of miscellaneous iron and steel.
12. See Standard Plan D78A for gutter depression details.
13. This dimenison will vary with different grates, curbs types, box width and wall thickness.
14. Bar may be rotated as necessary to clear opening. Where "L" is 6" or less, bar may be omitted.
15. Where "L" is 6" or less, wall thickness shall be as shown in Table A.
16. Cast-in-place inlets to be formed around all pipes/stubs intersecting the inlet, and concrete poured in one continuous operation. Precast inlets shall have mortared connections conforming to details for Type GCP Inlet shown on Standard Plan D75B. See Standard Specifications for mortar composition.

TABLE A

CONCRETE QUANTITIES				
TYPE	H=3'-0" TO 8'-0" (T=6")		H=8'-1" TO 20'-0" (T=8")	
	H=3'-0" (CY)	ADDITIONAL PCC PER FOOT (CY)	H=8'-1" (CY)	ADDITIONAL PCC PER FOOT (CY)
G-1	0.95	0.220	See Note A	SEE NOTE A
G-2*	1.31	0.255	3.50	0.357
G-3	1.03	0.220	See Note A	SEE NOTE A
G-4* (TYPE 24)	1.27	0.255	3.48	0.357
G-4* (TYPE 18)	1.30	0.255	3.50	0.357
G-5	1.02	0.220	SEE NOTE A	SEE NOTE A
G-6	1.04	0.220	SEE NOTE A	SEE NOTE A

TABLE BASED ON 8" FLOOR SLAB. NO DEDUCTIONS ARE TO BE MADE TO THESE QUANTITIES BECAUSE OF PIPE OPENINGS, DIFFERENT FLOOR ALTERNATIVES OR DIFFERENT CURB TYPES. * QUANTITIES FOR TYPE G-2 AND G-4 INLETS BASED ON THE MINIMUM INTERIOR DIMENSIONS.

NOTE A:

Maximum allowable height 6'-0".

STATE OF CALIFORNIA
DEPARTMENT OF TRANSPORTATION

DRAINAGE INLETS

NO SCALE

RSP D73 DATED OCTOBER 19, 2012 SUPERSEDES STANDARD PLAN D73 DATED MAY 20, 2011 - PAGE 156 OF THE STANDARD PLANS BOOK DATED 2010.

REVISED STANDARD PLAN RSP D73

2010 REVISED STANDARD PLAN RSP D73

DATE PLOTTED => 25-AUG-2014
TIME PLOTTED => 09:26

Dist	COUNTY	ROUTE	POST MILES TOTAL PROJECT	SHEET No.	TOTAL SHEETS
02	Sha	299	0.3/7.1	379	401

Raymond Don Tsztoo
REGISTERED CIVIL ENGINEER

April 19, 2013
PLANS APPROVAL DATE

REGISTERED PROFESSIONAL ENGINEER
Raymond Don Tsztoo
No. C37332
Exp. 6-30-14
CIVIL
STATE OF CALIFORNIA

THE STATE OF CALIFORNIA OR ITS OFFICERS OR AGENTS SHALL NOT BE RESPONSIBLE FOR THE ACCURACY OR COMPLETENESS OF SCANNED COPIES OF THIS PLAN SHEET.

TO ACCOMPANY PLANS DATED 06-09-14

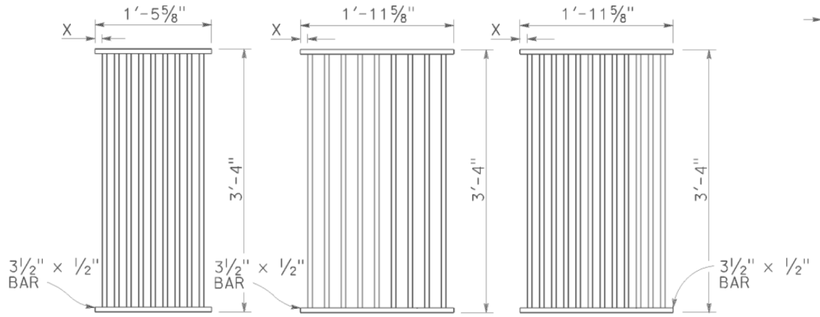

TYPE 18-9

1⅜" Clear spacing. Use within the roadbed on highways where bicycles and pedestrians are excluded.

TYPE 24-9

2" Clear spacing. Use in locations off the roadbed on all types of highways.

TYPE 24-12

1⅜" Clear spacing. Use within the roadbed on highways where bicycles and pedestrians are excluded.

RECTANGULAR GRATE DETAILS

(See table below)

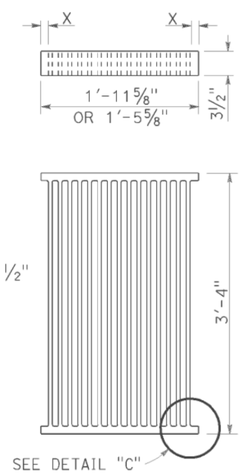

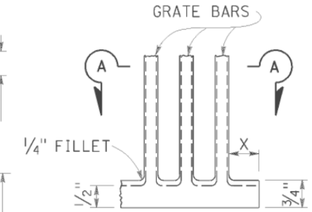

DETAIL "C"

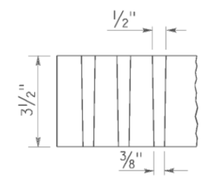

SECTION A-A

ALTERNATIVE CAST DUCTILE IRON GRATE OR CAST CARBON STEEL GRATE

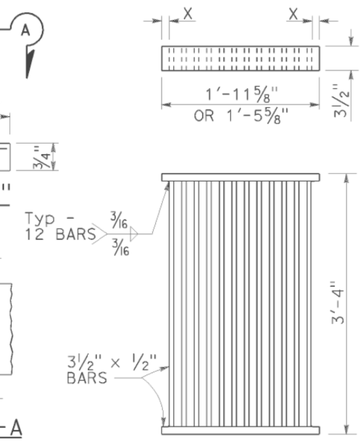

ALTERNATIVE WELDED GRATE

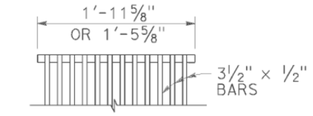

CAST END BLOCK

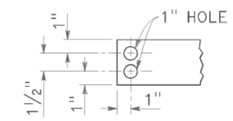

END OF BAR

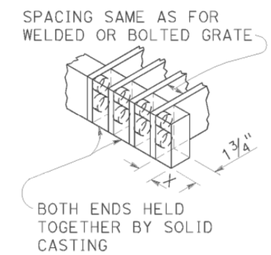

ALTERNATIVE CAST DUCTILE IRON OR CAST CARBON STEEL END BLOCK GRATE

NOTES:

1. Grate type numbers refer to approximate width of grate in inches and number of bars, respectively.
2. Contractor has the option of using cast ductile iron, cast carbon steel, welded, bolted, or cast end block grate.
3. Rounded top of bars optional on all grates.
4. Pipe inlets with a grate shall be placed so that bars parallel direction of principle surface flow.
5. Complete joint penetration butt welds may be substituted for the fillet welds on all anchors.
6. Standard square, hexagon, round or equivalent headed anchors may be substituted for the right angle hooks on the anchors shown on this plan.
7. Grate and frame weights are based on welded grates (weights of face angles, steps, protection bars, etc. are not included).
8. Connect chain to grate and frame only at locations shown on the plans. When chain is required, do not use cast ductile iron grates.

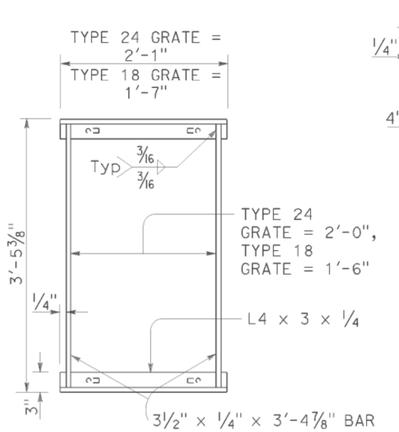

TYPICAL FRAME

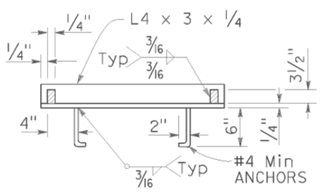

CROSS SECTION

(Thru frame)

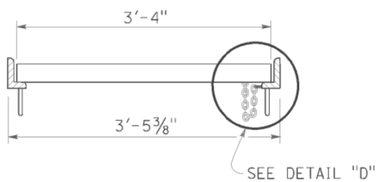

LONGITUDINAL SECTION

(Thru frame and grate)

RECTANGULAR FRAME DETAILS

(For all rectangular grates)

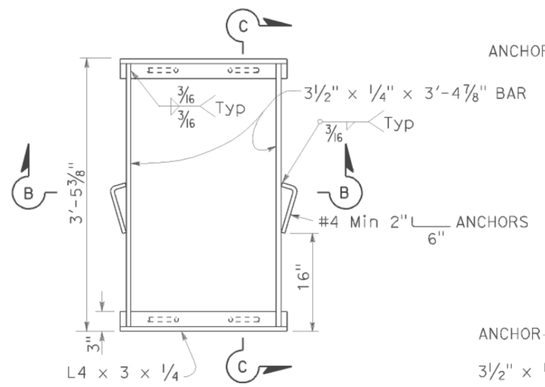

TYPICAL FRAME

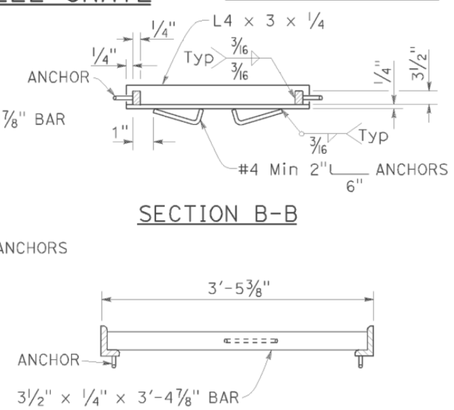

SECTION B-B

SECTION C-C

ALTERNATIVE ANCHOR FOR RECTANGULAR FRAME

(For details not shown, See Rectangular Frame Details)

INLET TYPE	GRATE TYPE	No. OF GRATES	WEIGHT LB
GDO	24-12	2	634
GOL-7	24-12	1	326
GOL-10	24-12	1	326
GO,G1,G2,G3,G4 (TYPE 24)	24-9	1	263
	24-12	1	326
G4 (TYPE 18),G5,G6	18-9	1	249
GT1	18-9	2	498
GT2	18-9	2	498
GT3	24-12	2	652
GT4	24-12	2	652
TRASH RACK			22
GRATE CHAIN			3

BASIS FOR Misc IRON & STEEL FINAL PAY WEIGHTS FOR DRAINAGE INLETS

(See Note 7)

INLET TYPE	COVER TYPE	WEIGHT LB
OS	PLATE	174
OL-7	PLATE	170
OL-10	PLATE	170
OL-14	PLATE	170
OL-21	PLATE	170
OCP	PLATE	112
OCPI	PLATE	112
OCPI	REDWOOD	42
OMP	PLATE	177
OMPI	PLATE	177

GRATE BAR SPACING TABLE

TYPE	No. OF BARS	CLEAR BAR SPACING	X
18-9	9	1⅜"	1 1/16"
24-9	9	2"	1 9/16"
24-12	12	1⅜"	1¼"

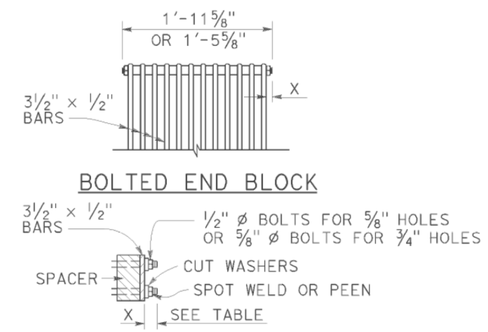

BOLTED END BLOCK

BOLTING DETAIL

ALTERNATIVE BOLTED GRATE

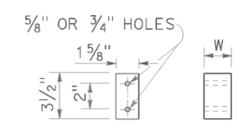

BAR SPACER

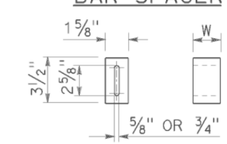

ALTERNATIVE SPACER

W = 1⅜" or 2"

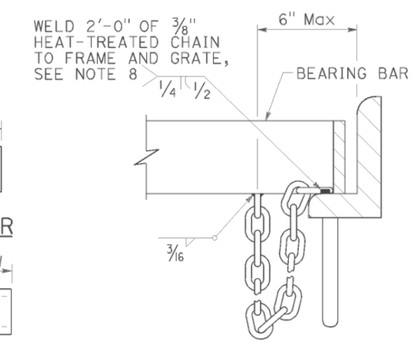

DETAIL "D"

(Steel grates only)

STATE OF CALIFORNIA
DEPARTMENT OF TRANSPORTATION

GRATE DETAILS No. 1

NO SCALE

RSP D77A DATED APRIL 19, 2013 SUPERSEDES RSP D77A DATED JULY 20, 2012 AND STANDARD PLAN D77A DATED MAY 20, 2011 - PAGE 164 OF THE STANDARD PLANS BOOK DATED 2010.

REVISED STANDARD PLAN RSP D77A

2010 REVISED STANDARD PLAN RSP D77A

DATE PLOTTED => 25-AUG-2014
TIME PLOTTED => 09:26

Dist	COUNTY	ROUTE	POST MILES TOTAL PROJECT	SHEET No.	TOTAL SHEETS
02	Sha	299	0.3/7.1	380	401

REGISTERED CIVIL ENGINEER

April 19, 2013
PLANS APPROVAL DATE

Raymond Don Tsztoo No. C37332 Exp. 6-30-14 CIVIL — REGISTERED PROFESSIONAL ENGINEER — STATE OF CALIFORNIA

THE STATE OF CALIFORNIA OR ITS OFFICERS OR AGENTS SHALL NOT BE RESPONSIBLE FOR THE ACCURACY OR COMPLETENESS OF SCANNED COPIES OF THIS PLAN SHEET.

TO ACCOMPANY PLANS DATED 06-09-14

2010 REVISED STANDARD PLAN RSP D77B

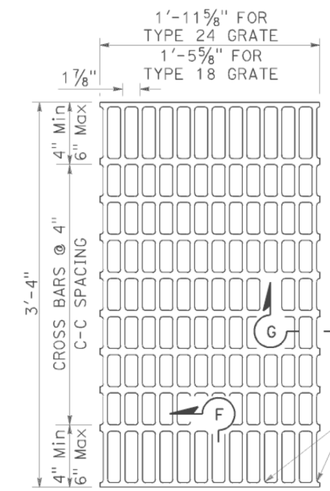

NOTES:

Bearing bars to be 3½" × ¼" bars on 1⅞" centers.

⅜"± ø Cross bars may be fillet welded, resistance welded or electroforged to bearing bars.

Weight of Type 24 grate = 141 LBS.

Weight of Type 18 grate = 107 LBS. (Type 24 grate shown).

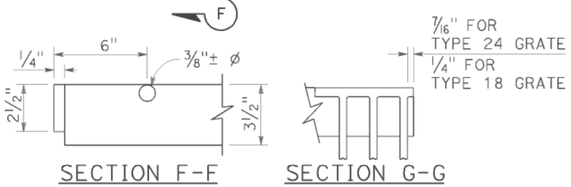

SECTION F-F SECTION G-G

TYPE 18-10 AND 24-13 GRATE

(Welded Steel)

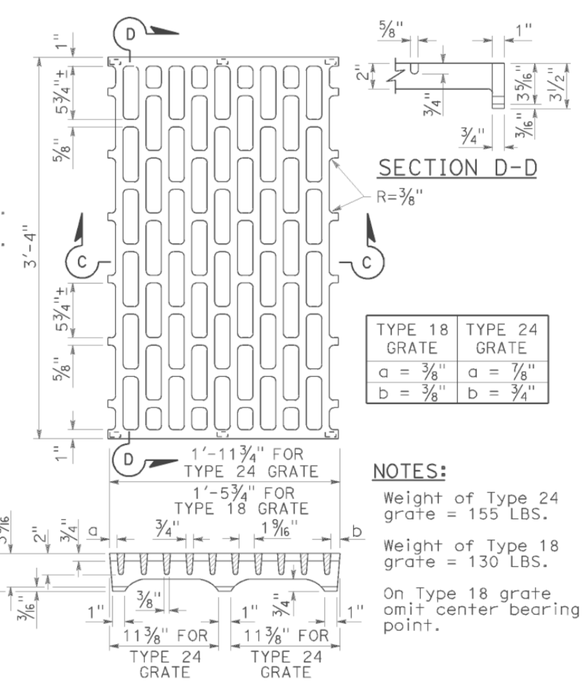

TYPE 18 GRATE	TYPE 24 GRATE
a = ⅜"	a = ⅞"
b = ⅜"	b = ¾"

SECTION D-D

NOTES:

Weight of Type 24 grate = 155 LBS.

Weight of Type 18 grate = 130 LBS.

On Type 18 grate omit center bearing point.

SECTION C-C

TYPE 18-8C AND 24-10C GRATE

(Cast ductile iron)

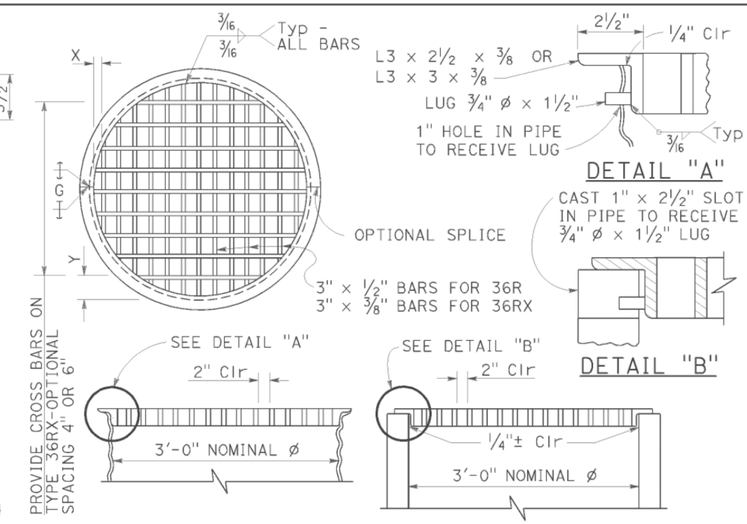

TYPE 36R AND 36RX GRATE DETAILS

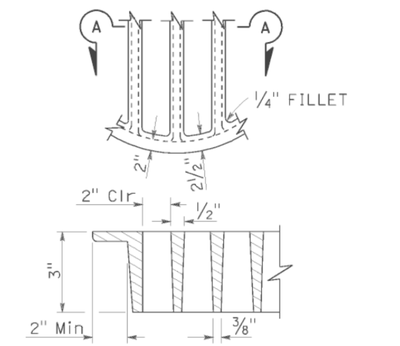

SECTION A-A

ALTERNATIVE CAST DUCTILE IRON GRATE OR CAST CARBON STEEL GRATE TYPE 36R AND 36RX

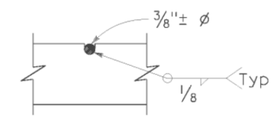

⅜"± ø Cross bars may be fillet welded, resistance welded or electroforged to bearing bars.

CROSS BAR DETAIL TYPE 36RX GRATE (WELDED STEEL)

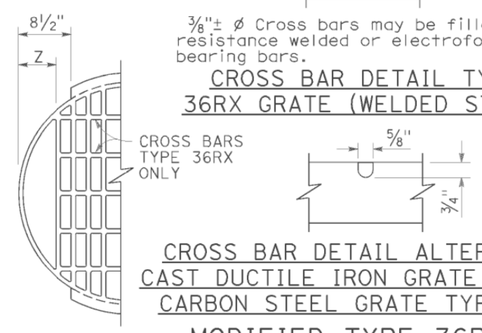

CROSS BAR DETAIL ALTERNATIVE CAST DUCTILE IRON GRATE OR CAST CARBON STEEL GRATE TYPE 36RX

MODIFIED TYPE 36R AND 36RX GRATE FOR ODI INLET

NOTES:

1. When alternative grates are allowed - Final pay based on alternative with the lesser weight.
2. Use frame shown on Standard Plan D74A, D74B or RSP D77A as appropriate.
3. When Type 24-10S, 24-12X or 24-13 grates are used with GDO Inlets, a ¼" × 3½" × 3'-4⅞" steel bar shall be welded across the center of inlet frame to separate the individual grates.
4. See Revised Standard Plan RSP D77A for connecting chain to welded grate and frame. When chain is required, do not use cast ductile iron grate.

BASIS FOR Misc IRON AND STEEL FINAL PAY WEIGHTS FOR DRAINAGE INLETS

INLET TYPE	GRATE TYPE	No. OF GRATES	WEIGHT LB
GDO (SEE NOTE 4)	24-10C	2	391
	24-10S	2	456
	24-12X	2	473
	24-13	2	374
GO,GOL,G1,G2, G3,G4 (TYPE 24)	24-10C	1	202
	24-10S	1	229
	24-12X	1	239
	24-13	1	188
G4 (TYPE 18) G5,G6	18-8S	1	187
	18-9X	1	187
	18-10	1	149
GT1,GT2	18-8S	2	374
	18-9X	2	374
	18-10	2	298
GT3,GT4	24-10C	2	404
	24-10S	2	458
	24-12X	2	478
	24-13	2	376
ODI	36RX (Mod)	1	196
GMP,GCP,GCPI	36RX	1	215
ODI	36R (Mod)	1	220
GMP,GCP,GCPI	36R	1	236
TRASH RACK			22
GRATE CHAIN			3

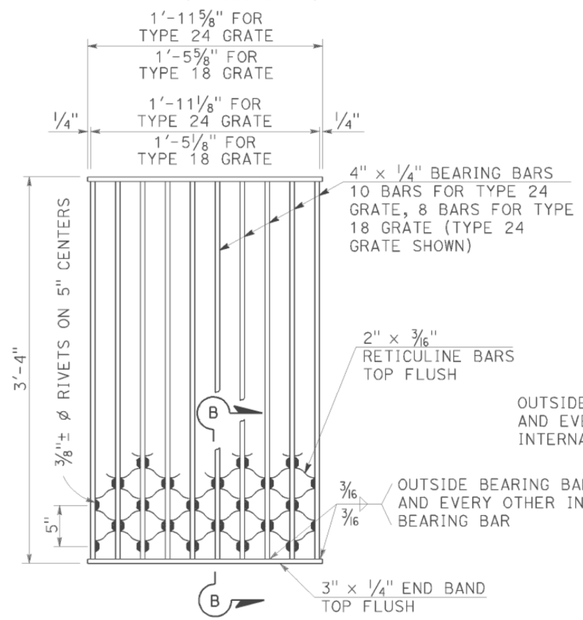

NOTES:

Weight of Type 24 grate = 182 LBS.
Weight of Type 18 grate = 145 LBS.

SECTION B-B

TYPE 18-8S AND 24-10S GRATE

(Welded Steel) Reticuline type

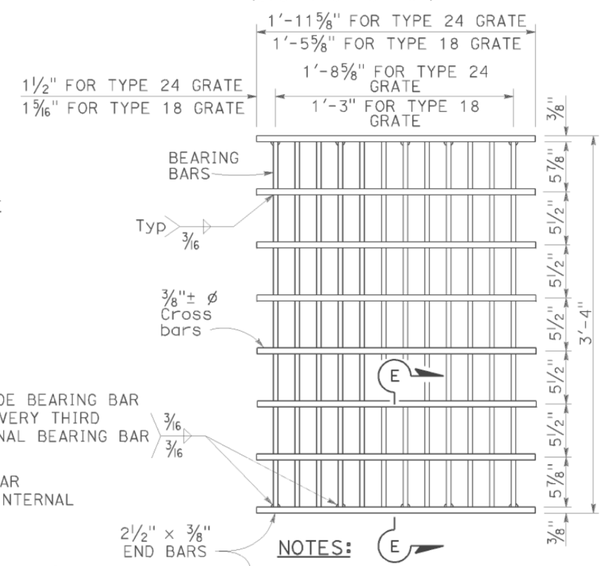

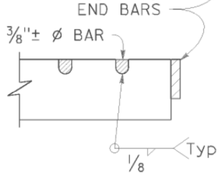

SECTION E-E

NOTES:

Bearing bars to be 3½" × ⅜" bars on 1⅞" centers.

12 Bars for Type 24 grate - 9 bars for Type 18 grates. (Type 24 grate shown).

Weight of Type 24 grate = 192 LBS.

Weight of Type 18 grate = 145 LBS.

⅜"± ø Cross bars may be fillet welded, resistance welded or electroforged to bearing bars.

TYPE 18-9X AND 24-12X GRATE

(Welded Steel)

GRATE BAR SPACING TABLE

TYPE	No. OF BARS	CLEAR BAR SPACING	X	Y 4" SPACING	Y 6" SPACING	Z
36R	13	2"	2⅛"	–	–	–
36RX (STEEL)	15	2"	9/16"	3¾"	5¾"	–
36RX (CAST)	13	2"	2⅛"	3¾"	5¾"	–
36R Mod	12	2"	2⅛"	–	–	5"
36RX Mod (STEEL)	13	2"	9/16"	3¾"	5¾"	5 11/16"
36RX Mod (CAST)	12	2"	2⅛"	3¾"	5¾"	5"

STATE OF CALIFORNIA
DEPARTMENT OF TRANSPORTATION

GRATE DETAILS No. 2

NO SCALE

RSP D77B DATED APRIL 19, 2013 SUPERSEDES RSP D77B DATED JULY 20, 2012 AND STANDARD PLAN D77B DATED MAY 20, 2011 - PAGE 165 OF THE STANDARD PLANS BOOK DATED 2010.

REVISED STANDARD PLAN RSP D77B

DATE PLOTTED => 25-AUG-2014
TIME PLOTTED => 09:27

Dist	COUNTY	ROUTE	POST MILES TOTAL PROJECT	SHEET No.	TOTAL SHEETS
02	Sha	299	0.3/7.1	381	401

Gregory A. Balzer
LICENSED LANDSCAPE ARCHITECT

July 19, 2013
PLANS APPROVAL DATE

LICENSED LANDSCAPE ARCHITECT
Gregory A. Balzer 2013
Gregory A. Balzer
C.A. License No.
2-28-15
Renewal Date
7-19-13
Date
STATE OF CALIFORNIA

THE STATE OF CALIFORNIA OR ITS OFFICERS OR AGENTS SHALL NOT BE RESPONSIBLE FOR THE ACCURACY OR COMPLETENESS OF SCANNED COPIES OF THIS PLAN SHEET.

TO ACCOMPANY PLANS DATED 06-09-14

A

AB	AGGREGATE BASE
ABS	ACRYLONITRILE-BUTADIENE-STYRENE
AC	ASPHALT CONCRETE
ACC	ARMOR-CLAD CONDUCTORS
Adj	ADJACENT/ADJUSTABLE
AIC	AUXILIARY IRRIGATION CONTROLLER
Alt	ALTERNATIVE
AMEND	AMENDMENT
ARV	AIR RELEASE VALVE
AUTO	AUTOMATIC
AUX	AUXILIARY
AVB	ATMOSPHERIC VACUUM BREAKER

B

B&B	BALLED AND BURLAPPED
B/B	BRASS/BRONZE
B/B/PL	BRASS/BRONZE/PLASTIC
B/PL	BRASS/PLASTIC
BFM	BONDED FIBER MATRIX
Bit Ctd	BITUMINOUS COATED
BP	BOOSTER PUMP
BPA	BACKFLOW PREVENTER ASSEMBLY
BPE	BACKFLOW PREVENTER ENCLOSURE
BV	BALL VALVE

C

C	CONDUIT
CAP	CORRUGATED ALUMINUM PIPE
CARV	COMBINATION AIR RELEASE VALVE
CB	COUPLING BAND
CCA	CAM COUPLER ASSEMBLY
CEC	CONTROLLER ENCLOSURE CABINET
CHDPE	CORRUGATED HIGH DENSITY POLYETHYLENE
CL	CHAIN LINK
CNC	CONTROL AND NEUTRAL CONDUCTORS
Conc	CONCRETE
CP	COPPER PIPE
CS	COMPOST SOCK
CSP	CORRUGATED STEEL PIPE
CST	CENTER STRIP
CV	CHECK VALVE

D

Dia	DIAMETER
DIP	DUCTILE IRON PIPE
DIT	DRIP IRRIGATION TUBING
DG	DECOMPOSED GRANITE
DN	DIAMETER NOMINAL
DVA	DRIP VALVE ASSEMBLY

E

EC	EROSION CONTROL
ECTC	EROSION CONTROL TECHNOLOGY COUNCIL
Elect	ELECTRIC/ELECTRICAL
Elev	ELEVATION
ELL	ELBOW
ENCL	ENCLOSURE
EP	EDGE OF PAVEMENT
ES	EDGE OF SHOULDER
EST	END STRIP
ESTB	ESTABLISHMENT
ETW	EDGE OF TRAVELED WAY

F

F	FULL CIRCLE
F/P	FULL/PART CIRCLE
FCV	FLOW CONTROL VALVE
FERT	FERTILIZER
FG	FINISHED GRADE
FH	FLEXIBLE HOSE
FIPT	FEMALE IRON PIPE THREAD
FIS	FERTILIZER INJECTOR SYSTEM
FL	FLOW LINE
FR	FIBER ROLL
FS	FLOW SENSOR
FSC	FLOW SENSOR CABLE
FV	FLUSH VALVE

G

Galv	GALVANIZED
GARV	GARDEN VALVE
GARVA	GARDEN VALVE ASSEMBLY
GM	GRAVEL MULCH
GPH	GALLONS PER HOUR
GPM	GALLONS PER MINUTE
GSP	GALVANIZED STEEL PIPE
GV	GATE VALVE

H

H	HALF CIRCLE
HDPE	HIGH DENSITY POLYETHYLENE
HP	HORSEPOWER/HINGE POINT
HPL	HIGH PRESSURE LINE
Hwy	HIGHWAY

I

IC	IRRIGATION CONTROLLER
ICC	IRRIGATION CONTROLLER(S) IN CONTROLLER ENCLOSURE CABINET
ID	INSIDE DIAMETER
IFS	IRRIGATION FILTRATION SYSTEM
IPS	IRON PIPE SIZE
IPT	IRON PIPE THREAD
Irr	IRRIGATION

L

L	LENGTH

M

Max	MAXIMUM
MBGR	METAL BEAM GUARD RAILING
MCV	MANUAL CONTROL VALVE
MIC	MASTER IRRIGATION CONTROLLER
Min	MINIMUM
MIPT	MALE IRON PIPE THREAD
Misc	MISCELLANEOUS
Mtl	MATERIAL
MVP	MAINTENANCE VEHICLE PULLOUT

N

NCN	NO COMMON NAME
NL	NOZZLE LINE
No.	NUMBER
NPT	NATIONAL PIPE THREAD

O

O/C	ON CENTER
OD	OUTSIDE DIAMETER
OL	OVERLAP

P

P	PART CIRCLE
PB	PULL BOX
PCC	PORTLAND CEMENT CONCRETE
PE	POLYETHYLENE
Pkt	PACKET
PL	PLASTIC
PLS	PURE LIVE SEED
PLT	PLANT/PLANTING
PLT ESTB	PLANT ESTABLISHMENT
PM	POST MILE
PR	PRESSURE RATED
PRLV	PRESSURE RELIEF VALVE
PRV	PRESSURE REGULATING VALVE
PVC	POLYVINYL CHLORIDE
Pvmt	PAVEMENT

Q

Q	QUARTER CIRCLE
QCV	QUICK COUPLING VALVE

R

R	RADIUS
RCP	REINFORCED CONCRETE PIPE
RCV	REMOTE CONTROL VALVE
RCVM	REMOTE CONTROL VALVE (MASTER)
RCVMF	REMOTE CONTROL VALVE (MASTER) W/FLOW SENSOR
RCVP	REMOTE CONTROL VALVE W/PRESSURE REGULATOR
RCW	RECYCLED WATER
RECP	ROLLED EROSION CONTROL PRODUCT
REQ	REQUIRED
RICS	REMOTE IRRIGATION CONTROL SYSTEM
R/W	RIGHT OF WAY

S

S	SLIP
SCH	SCHEDULE
SF	STATE-FURNISHED
Shld	SHOULDER
Sq	SQUARE
SST	SIDE STRIP
Sta	STATION
Std	STANDARD
SW	SIDEWALK/SOUND WALL

T

T	THIRD CIRCLE/THREAD
TLS	TRUCK LOADING STANDPIPE
TQ	THREE QUARTER CIRCLE
TRM	TURF REINFORCEMENT MAT
TT	TWO-THIRDS CIRCLE
TWSA	TREE WELL SPRINKLER ASSEMBLY
Typ	TYPICAL

U

UG	UNDERGROUND

W

W	WIDTH
W/	WITH
WM	WATER METER
WS	WYE STRAINER
WSA	WYE STRAINER ASSEMBLY
WSP	WELDED STEEL PIPE
WWM	WELDED WIRE MESH

NOTE:
For additional abbreviations, see Standard Plans A10A and A10B.

STATE OF CALIFORNIA
DEPARTMENT OF TRANSPORTATION

LANDSCAPE AND EROSION CONTROL ABBREVIATIONS

NO SCALE

RSP H1 DATED JULY 19, 2013 SUPERSEDES STANDARD PLAN H1 DATED MAY 20, 2011 - PAGE 218 OF THE STANDARD PLANS BOOK DATED 2010.

REVISED STANDARD PLAN RSP H1

2010 REVISED STANDARD PLAN RSP H1

DATE PLOTTED => 25-AUG-2014
TIME PLOTTED => 09:27

Dist	COUNTY	ROUTE	POST MILES TOTAL PROJECT	SHEET No.	TOTAL SHEETS
02	Sha	299	0.3/7.1	382	401

LICENSED LANDSCAPE ARCHITECT

November 15, 2013
PLANS APPROVAL DATE

LICENSED LANDSCAPE ARCHITECT — Gregory A. Balzer 2-28-15 — 11-15-13 — STATE OF CALIFORNIA

THE STATE OF CALIFORNIA OR ITS OFFICERS OR AGENTS SHALL NOT BE RESPONSIBLE FOR THE ACCURACY OR COMPLETENESS OF SCANNED COPIES OF THIS PLAN SHEET.

TO ACCOMPANY PLANS DATED 06-09-14

EXISTING	NEW	ITEM DESCRIPTION
		WATER METER (WM)
		BACKFLOW PREVENTER ASSEMBLY (BPA)
		BACKFLOW PREVENTER ENCLOSURE (BPE)
		BOOSTER PUMP (BP)
		TRUCK LOADING STANDPIPE (TLS)
	FS	FLOW SENSOR (FS)
X	X	MASTER IRRIGATION CONTROLLER (MIC)
		AUXILIARY IRRIGATION CONTROLLER (AIC)
		IRRIGATION CONTROLLER (IC) IRRIGATION CONTROLLER (IC) (BATTERY) IRRIGATION CONTROLLER (IC) (SOLAR) IRRIGATION CONTROLLER (IC) (TWO WIRE)
		IRRIGATION CONTROLLER(S) IN CONTROLLER ENCLOSURE CABINET (ICC)
acc	ACC	ARMOR-CLAD CONDUCTORS (ACC)
cnc	CNC	CONTROL AND NEUTRAL CONDUCTORS (CNC)
		IRRIGATION CONDUIT
		EXTEND IRRIGATION CONDUIT
dip	DIP	DUCTILE IRON PIPE (SUPPLY LINE) (MAIN) (DIP)
		GALVANIZED STEEL PIPE (SUPPLY LINE) (MAIN) (GSP)
		GALVANIZED STEEL PIPE (SUPPLY LINE) (LATERAL) (GSP)
		PLASTIC PIPE (SUPPLY LINE) (MAIN)
		PLASTIC PIPE (SUPPLY LINE) (LATERAL)
cp	CP	COPPER PIPE (SUPPLY LINE)
dit	DIT	DRIP IRRIGATION TUBING
		REMOTE CONTROL VALVE (RCV) REMOTE CONTROL VALVE (MASTER) (RCVM) REMOTE CONTROL VALVE (MASTER) W/FLOW METER (RCVMF)
P	P	REMOTE CONTROL VALVE W/PRESSURE REGULATOR (RCVP)
		EXISTING MANUAL CONTROL VALVE (MCV)
V	V	DRIP VALVE ASSEMBLY (DVA)
Y	Y	WYE STRAINER ASSEMBLY (WSA)

EXISTING	NEW	ITEM DESCRIPTION
		GATE VALVE (GV)
		BALL VALVE (BV)
		QUICK COUPLING VALVE (QCV)
		CAM COUPLER ASSEMBLY (CCA)
		GARDEN VALVE ASSEMBLY (GARVA)
		PRESSURE REGULATING VALVE (PRV)
		PRESSURE RELIEF VALVE (PRLV)
		FLOW CONTROL VALVE (FCV)
		COMBINATION AIR RELEASE VALVE (CARV)
		CHECK VALVE (CV)
		FLUSH VALVE (FV)
		EXISTING NOZZLE LINE W/TURNING UNION
		EXISTING IRRIGATION SYSTEM
		EXISTING IRRIGATION SYSTEM TO BE REMOVED
		CHAIN LINK GATE
		QUICK COUPLING VALVE W/SPRINKLER PROTECTOR
3	3	SPRINKLER W/SPRINKLER PROTECTOR
	C	CONNECT TO EXISTING SYSTEM
		CAP
		CAP EXISTING
	\\\FR\\\	FIBER ROLL
	\\\CS\\\	COMPOST SOCK

RCV SIZE
IRRIGATION CONTROLLER
CONTROLLER STATION
VALVE IN PARALLEL (IF APPLICABLE)
GPM
QUANTITY OF SPRINKLERS (WHEN SHOWN)

* 2½"-A-2b-40-60

VALVE CODE

* VALVE CODES FOR EXISTING VALVES ARE SHOWN IN A DASHED ENCLOSURE.

STATE OF CALIFORNIA
DEPARTMENT OF TRANSPORTATION

LANDSCAPE AND EROSION CONTROL SYMBOLS

NO SCALE

RSP H2 DATED NOVEMBER 15, 2013 SUPERSEDES RSP H2 DATED JULY 19, 2013 AND STANDARD PLAN H2 DATED MAY 20, 2011 - PAGE 219 OF THE STANDARD PLANS BOOK DATED 2010.

REVISED STANDARD PLAN RSP H2

2010 REVISED STANDARD PLAN RSP H2

DATE PLOTTED => 25-AUG-2014
TIME PLOTTED => 09:27

Dist	COUNTY	ROUTE	POST MILES TOTAL PROJECT	SHEET No.	TOTAL SHEETS
02	Sha	299	0.3/7.1	383	401

REGISTERED CIVIL ENGINEER

July 19, 2013
PLANS APPROVAL DATE

REGISTERED PROFESSIONAL ENGINEER
Gurinderpal Bhullar
No. C48815
Exp. 9-30-14
CIVIL
STATE OF CALIFORNIA

THE STATE OF CALIFORNIA OR ITS OFFICERS OR AGENTS SHALL NOT BE RESPONSIBLE FOR THE ACCURACY OR COMPLETENESS OF SCANNED COPIES OF THIS PLAN SHEET.

TO ACCOMPANY PLANS DATED 06-09-14

2010 REVISED STANDARD PLAN RSP T9

TABLE 1

TAPER LENGTH CRITERIA AND CHANNELIZING DEVICE SPACING

SPEED (S)	MINIMUM TAPER LENGTH * FOR WIDTH OF OFFSET 12 FEET (W)				MAXIMUM CHANNELIZING DEVICE SPACING		
					X	Y	Z **
	TANGENT 2L	MERGING L	SHIFTING L/2	SHOULDER L/3	TAPER	TANGENT	CONFLICT
mph	ft	ft	ft	ft	ft	ft	ft
20	160	80	40	27	20	40	10
25	250	125	63	42	25	50	12
30	360	180	90	60	30	60	15
35	490	245	123	82	35	70	17
40	640	320	160	107	40	80	20
45	1080	540	270	180	45	90	22
50	1200	600	300	200	50	100	25
55	1320	660	330	220	55	110	27
60	1440	720	360	240	60	120	30
65	1560	780	390	260	65	130	32
70	1680	840	420	280	70	140	35

* - For other offsets, use the following merging taper length formula for L:
For speed of 40 mph or less, $L = WS^2/60$
For speed of 45 mph or more, $L = WS$

Where: L = Taper length in feet
W = Width of offset in feet
S = Posted speed limit, off-peak 85th-percentile speed prior to work starting, or the anticipated operating speed in mph

** - Use for taper and tangent sections where there are no pavement markings or where there is a conflict between existing pavement markings and channelizers (CA).

TABLE 2

LONGITUDINAL BUFFER SPACE AND FLAGGER STATION SPACING

SPEED *	Min D **	DOWNGRADE Min D ***		
		-3%	-6%	-9%
mph	ft	ft	ft	ft
20	115	116	120	126
25	155	158	165	173
30	200	205	215	227
35	250	257	271	287
40	305	315	333	354
45	360	378	400	427
50	425	446	474	507
55	495	520	553	593
60	570	598	638	686
65	645	682	728	785
70	730	771	825	891

* - Speed is posted speed limit, off-peak 85th-percentile speed prior to work starting, or the anticipated operating speed in mph

** - Longitudinal buffer space or flagger station spacing

*** - Use on sustained downgrade steeper than -3 percent and longer than 1 mile.

TABLE 3

ADVANCE WARNING SIGN SPACING

ROAD TYPE	DISTANCE BETWEEN SIGNS *		
	A	B	C
	ft	ft	ft
URBAN - 25 mph OR LESS	100	100	100
URBAN - MORE THAN 25 mph TO 40 mph	250	250	250
URBAN - MORE THAN 40 mph	350	350	350
RURAL	500	500	500
EXPRESSWAY / FREEWAY	1000	1500	2640

* - The distances are approximate, are intended for guidance purposes only, and should be applied with engineering judgment. These distances should be adjusted by the Engineer for field conditions, if necessary, by increasing or decreasing the recommmended distances.

STATE OF CALIFORNIA
DEPARTMENT OF TRANSPORTATION

TRAFFIC CONTROL SYSTEM TABLES FOR LANE AND RAMP CLOSURES

NO SCALE

RSP T9 DATED JULY 19, 2013 SUPERSEDES RSP T9 DATED APRIL 19, 2013 THAT SUPPLEMENTS THE STANDARD PLANS BOOK DATED 2010.

REVISED STANDARD PLAN RSP T9

DATE PLOTTED => 25-AUG-2014
TIME PLOTTED => 09:27

Dist	COUNTY	ROUTE	POST MILES TOTAL PROJECT	SHEET No.	TOTAL SHEETS
02	Sha	299	0.3/7.1	384	401

REGISTERED CIVIL ENGINEER

April 19, 2013
PLANS APPROVAL DATE

REGISTERED PROFESSIONAL ENGINEER Gurinderpal Bhullar No. C48815 Exp. 9-30-14 CIVIL STATE OF CALIFORNIA

THE STATE OF CALIFORNIA OR ITS OFFICERS OR AGENTS SHALL NOT BE RESPONSIBLE FOR THE ACCURACY OR COMPLETENESS OF SCANNED COPIES OF THIS PLAN SHEET.

TO ACCOMPANY PLANS DATED 06-09-14

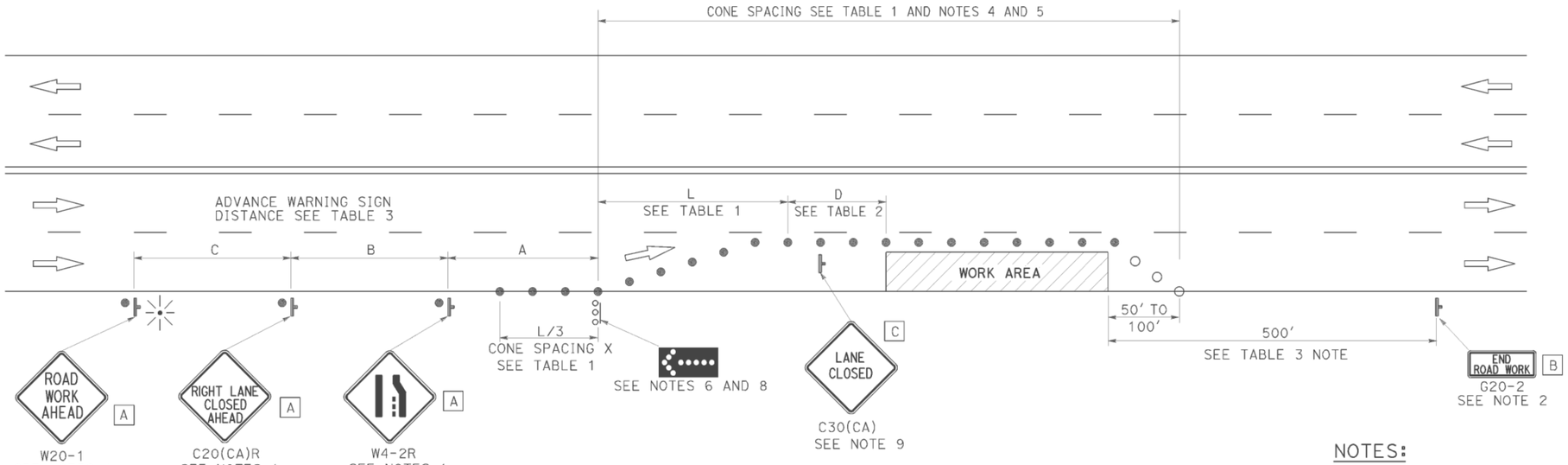

TYPICAL LANE CLOSURE

NOTES:

See Revised Standard Plan RSP T9 for tables.

Use cone spacing X for taper segment, Y for tangent segment or Z for conflict situations, as approriate, per Table 1, unless X, Y, or Z cone spacing is shown on this sheet.

Unless otherwise specified in the special provisions, all temporary warning signs shall have black legend on fluorescent orange background.

California codes are designated by (CA). Otherwise, Federal (MUTCD) codes are shown.

NOTES:

1. Each advance warning sign shall be equipped with at least two flags for daytime closure. Each flag shall be at least 16" x 16" in size and shall be orange or fluorescent red-orange in color. Flashing beacons shall be placed at the locations indicated for lane closure during hours of darkness.
2. A G20-2 "END ROAD WORK" sign, as appropriate, shall be placed at the end of the lane closure unless the end of work area is obvious, or ends within a larger project's limits.
3. If the W20-1 sign would follow within 2000' of a stationary W20-1 or G20-1 "ROAD WORK NEXT _____ MILES", use a C20(CA) sign for the first advance warning sign.
4. All cones used for lane closures during the hours of darkness shall be fitted with retroreflective bands (or sleeves) as specified in the specifications.
5. Portable delineators, placed at one-half the spacing indicated for traffic cones, may be used instead of cones for daytime closures only.
6. Flashing arrow sign shall be either Type I or Type II.
7. For approach speeds over 50 mph, use the "Traffic Control System for Lane Closure On Freeways And Expressways" plan for lane closure details and requirements.
8. A minimum 1500' of sight distance shall be provided where possible for vehicles approaching the first flashing arrow sign. Lane closures shall not begin at the top of crest vertical curve or on a horizontal curve.
9. Place a C30(CA) sign every 2000' throughout length of lane closure.
10. Median lane closures shall conform to the details as shown except that C20(CA)L and W4-2L signs shall be used.
11. At least one person shall be assigned to provide full time maintenance of traffic control devices for lane closure unless, otherwise directed by the Engineer.

LEGEND

- ● TRAFFIC CONE
- ○ TRAFFIC CONE (OPTIONAL TAPER)
- TEMPORARY TRAFFIC CONTROL SIGN
- FLASHING ARROW SIGN (FAS)
- FAS SUPPORT OR TRAILER
- PORTABLE FLASHING BEACON

SIGN PANEL SIZE (Min)

A	48" x 48"
B	36" x 18"
C	30" x 30"

STATE OF CALIFORNIA
DEPARTMENT OF TRANSPORTATION

TRAFFIC CONTROL SYSTEM FOR LANE CLOSURE ON MULTILANE CONVENTIONAL HIGHWAYS

NO SCALE

RSP T11 DATED APRIL 19, 2013 SUPERSEDES STANDARD PLAN T11 DATED MAY 20, 2011 - PAGE 239 OF THE STANDARD PLANS BOOK DATED 2010.

REVISED STANDARD PLAN RSP T11

2010 REVISED STANDARD PLAN RSP T11

DATE PLOTTED => 25-AUG-2014
TIME PLOTTED => 09:27

Dist	COUNTY	ROUTE	POST MILES TOTAL PROJECT	SHEET No.	TOTAL SHEETS
02	Sha	299	0.3/7.1	385	401

REGISTERED CIVIL ENGINEER

July 18, 2014
PLANS APPROVAL DATE

REGISTERED PROFESSIONAL ENGINEER Gurinderpal Bhullar No. C48815 Exp. 9-30-14 CIVIL STATE OF CALIFORNIA

THE STATE OF CALIFORNIA OR ITS OFFICERS OR AGENTS SHALL NOT BE RESPONSIBLE FOR THE ACCURACY OR COMPLETENESS OF SCANNED COPIES OF THIS PLAN SHEET.

TO ACCOMPANY PLANS DATED 06-09-14

NOTES:

See Revised Standard Plan RSP T9 for tables.

Use cone spacing X for taper segment, Y for tangent segment or Z for conflict situations, as approriate, per Table 1, unless X, Y, or Z cone spacing is shown on this sheet.

Unless otherwise specified in the special provisions, all temporary warning signs shall have black legend on fluorescent orange background.

California codes are designated by (CA). Otherwise, Federal (MUTCD) codes are shown.

TYPICAL LANE CLOSURE WITH REVERSIBLE CONTROL

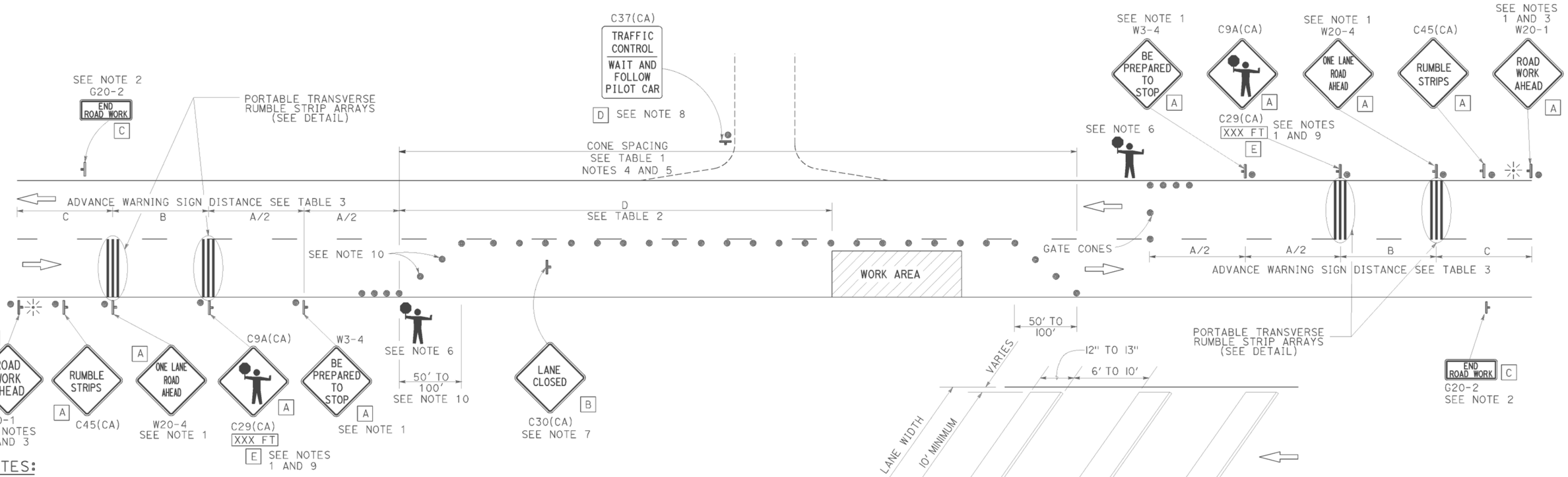

NOTES:

1. Each advance warning sign in each direction of travel shall be equipped with at least two flags for daytime closure. Each flag shall be at least 16" x 16" in size and shall be orange or fluorescent red-orange in color. Flashing beacons shall be placed at the locations indicated for lane closure during hours of darkness.
2. A G20-2 "END ROAD WORK" sign, as appropriate, shall be placed at the end of the lane control unless the end of work area is obvious, or ends within a larger project's limits.
3. If the W20-1 sign would follow within 2000' of a stationary W20-1 or G20-1 "ROAD WORK NEXT _____ MILES", use a W20-4 sign for the first advance warning sign.
4. All cones used for lane closures during the hours of darkness shall be fitted with retroreflective bands (or sleeves) as specified in the specifications.
5. Portable delineators, placed at one-half the spacing indicated for traffic cones, may be used instead of cones for daytime closures only.
6. Additional advance flaggers may be required. Flagger should stand in a conspicuous place, be visible to approaching traffic as well as approaching vehicles after the first vehicle has stopped. During the hours of darkness, the flagging-station and flagger shall be illuminated and clearly visible to approaching traffic. The illumination footprint of the lighting on the ground shall be at least 20' in diameter. Place a minimum of four cones at 50' intervals in advance of flagger station as shown.
7. Place C30(CA) "LANE CLOSED" sign at 500' to 1000' intervals throughout extended work areas. They are optional if the work area is visible from the flagger station.
8. When a pilot car is used, place a C37(CA) "TRAFFIC CONTROL-WAIT AND FOLLOW PILOT CAR" sign with black legend on white background at all intersections, driveways and alleys without a flagger within traffic control area. Signs shall be clean and visible at all times. Where traffic can not be effectively self-regulated, at least one flagger shall be used at each intersection within traffic control area.
9. An optional C29(CA) sign may be placed below the C9A(CA) sign.
10. Either traffic cones or barricades shall be placed on the taper. Barricades shall be Type I, II, or III.
11. The color of the portable transverse rumble strips shall be black or orange. Use 2 arrays, each array shall consist of 3 rumble strips.
12. Portable transverse rumble strips shall not be placed on sharp horizontal or vertical curves nor shall they be placed through pedestrian crossings.
13. If the portable transverse rumble strips become out of alignment (skewed) by more than 6 inches, measured from one end to the other, they shall be readjusted to bring the placement back to the original location.

PORTABLE TRANSVERSE RUMBLE STRIP ARRAY DETAIL

LEGEND

- TRAFFIC CONE
- TEMPORARY TRAFFIC CONTROL SIGN
- PORTABLE FLASHING BEACON
- FLAGGER

SIGN PANEL SIZE (Min)

A	48" x 48"
B	30" x 30"
C	36" x 18"
D	36" x 42"
E	20" x 7"

STATE OF CALIFORNIA
DEPARTMENT OF TRANSPORTATION

TRAFFIC CONTROL SYSTEM FOR LANE CLOSURE ON TWO LANE CONVENTIONAL HIGHWAYS

NO SCALE

RSP T13 DATED JULY 18, 2014 SUPERSEDES RSP T13 DATED APRIL 19, 2013 AND STANDARD PLAN T13 DATED MAY 20, 2011 - PAGE 241 OF THE STANDARD PLANS BOOK DATED 2010.

REVISED STANDARD PLAN RSP T13

2010 REVISED STANDARD PLAN RSP T13

DATE PLOTTED => 25-AUG-2014
TIME PLOTTED => 09:27

Dist	COUNTY	ROUTE	POST MILES TOTAL PROJECT	SHEET No.	TOTAL SHEETS
02	Sha	299	0.3/7.1	386	401

REGISTERED CIVIL ENGINEER

April 19, 2013
PLANS APPROVAL DATE

REGISTERED PROFESSIONAL ENGINEER Gurinderpal Bhullar No. C48815 Exp. 9-30-14 CIVIL STATE OF CALIFORNIA

THE STATE OF CALIFORNIA OR ITS OFFICERS OR AGENTS SHALL NOT BE RESPONSIBLE FOR THE ACCURACY OR COMPLETENESS OF SCANNED COPIES OF THIS PLAN SHEET.

TO ACCOMPANY PLANS DATED 06-09-14

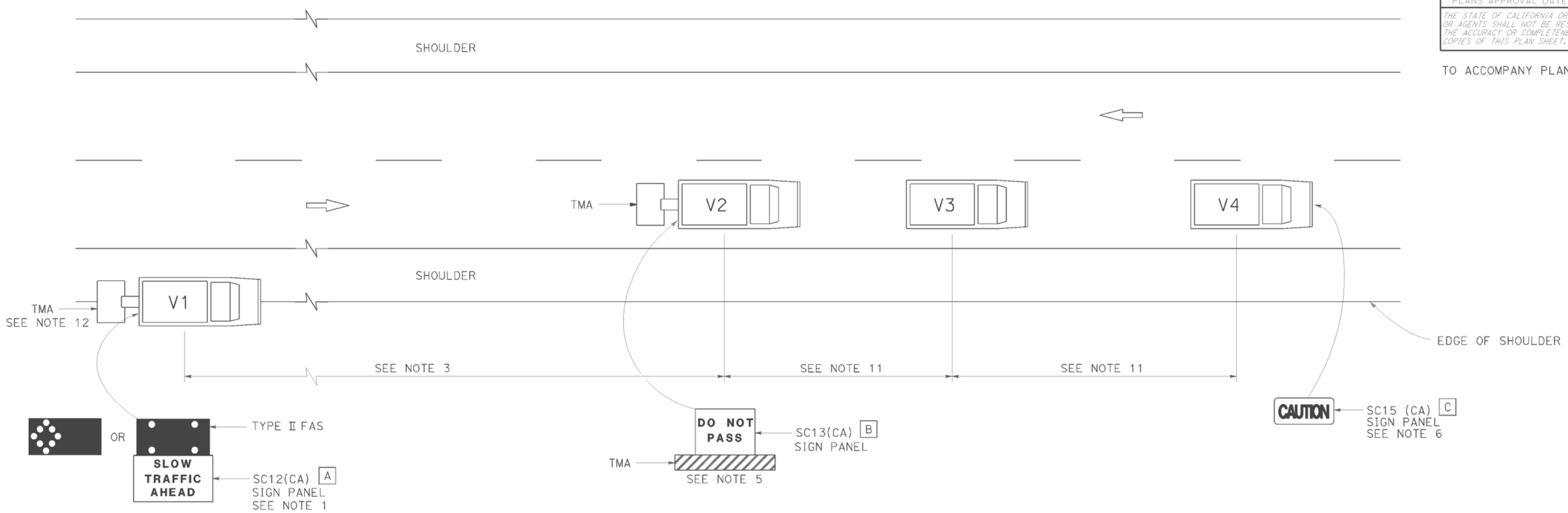

LEGEND

V1	SIGN VEHICLE
V2	SHADOW VEHICLE
V3	WORK/APPLICATION VEHICLE
V4	SIGN VEHICLE
TMA	TRUCK-MOUNTED ATTENUATOR
	FLASHING ARROW SIGN (FAS) IN FLASHING CAUTION MODE
	FLASHING ARROW SIGN (FAS) IN ALTERNATING DIAMOND CAUTION

SIGN PANEL SIZE (Min)

A	72" x 42"
B	54" x 42"
C	54" x 24"

NOTES:

1. Either a changeable message sign or a SC12(CA) "SLOW TRAFFIC AHEAD" sign shall be mounted on the rear of sign vehicle V1. The changeable message sign shall be sequenced to show the "CAUTION" message first, follow by the "SLOW TRAFFIC AHEAD" message. A Type II flashing arrow sign may be used with the SC12(CA) sign panel.
2. Sign vehicle V1 should be positioned where highly visible when shoulders are not available.
3. If traffic queues develop, sign vehicle V1 should be positioned upstream from the end of queue.
4. Vehicle-mounted sign panels shall have Type III or above retroreflective sheeting, black on white, or black on fluorescent orange, with 6" minimum series D letters per Caltrans sign specifications.
5. Shadow vehicle shall be equipped with a truck-mounted attenuator. The sign panel shown shall be mounted on the rear of shadow vehicle V2. The message "LANE CLOSED" may be used in place of the "DO NOT PASS" message.
6. The sign panel shown shall be mounted on the front of sign vehicle V4, facing opposing traffic.
7. All vehicles shall be equipped with flashing or rotating amber lights.
8. Sign vehicle V4 will not be required when the work and vehicles V2 and V3 are 2' or more from the centerline of the highway during the work or application operations.
9. All vehicles used for lane closures shall be equipped with two-way radios and the vehicle operators shall maintain communication during the work or application operation.
10. This plan shall not be used where workers would be on foot in the work area. Use a stationary type lane closure (Revised Standard Plan T13) for this condition.
11. Minimize spacing between vehicles V2 and V3 and vehicles V3 and V4 to deter road users from driving in between them.
12. If sign vehicle V1 encroaches into the traffic lane due to insufficient shoulder width, sign vehicle V1 shall be equipped with a truck-mounted attenuator. Sign vehicle V1 shall stay as close to the edge of shoulder as practicable.

STATE OF CALIFORNIA
DEPARTMENT OF TRANSPORTATION

TRAFFIC CONTROL SYSTEM FOR MOVING LANE CLOSURE ON TWO LANE HIGHWAYS

NO SCALE

RSP T17 DATED APRIL 19, 2013 SUPERSEDES STANDARD PLAN T17
DATED MAY 20, 2011 - PAGE 245 OF THE STANDARD PLANS BOOK DATED 2010.

REVISED STANDARD PLAN RSP T17

2010 REVISED STANDARD PLAN RSP T17

DATE PLOTTED => 25-AUG-2014
TIME PLOTTED => 09:27

Dist	COUNTY	ROUTE	POST MILES TOTAL PROJECT	SHEET No.	TOTAL SHEETS
02	Sha	299	0.3/7.1	387	401

REGISTERED CIVIL ENGINEER

April 20, 2012
PLANS APPROVAL DATE

REGISTERED PROFESSIONAL ENGINEER Gary Wang No. C58298 Exp. 6-30-12 CIVIL STATE OF CALIFORNIA

THE STATE OF CALIFORNIA OR ITS OFFICERS OR AGENTS SHALL NOT BE RESPONSIBLE FOR THE ACCURACY OR COMPLETENESS OF SCANNED COPIES OF THIS PLAN SHEET.

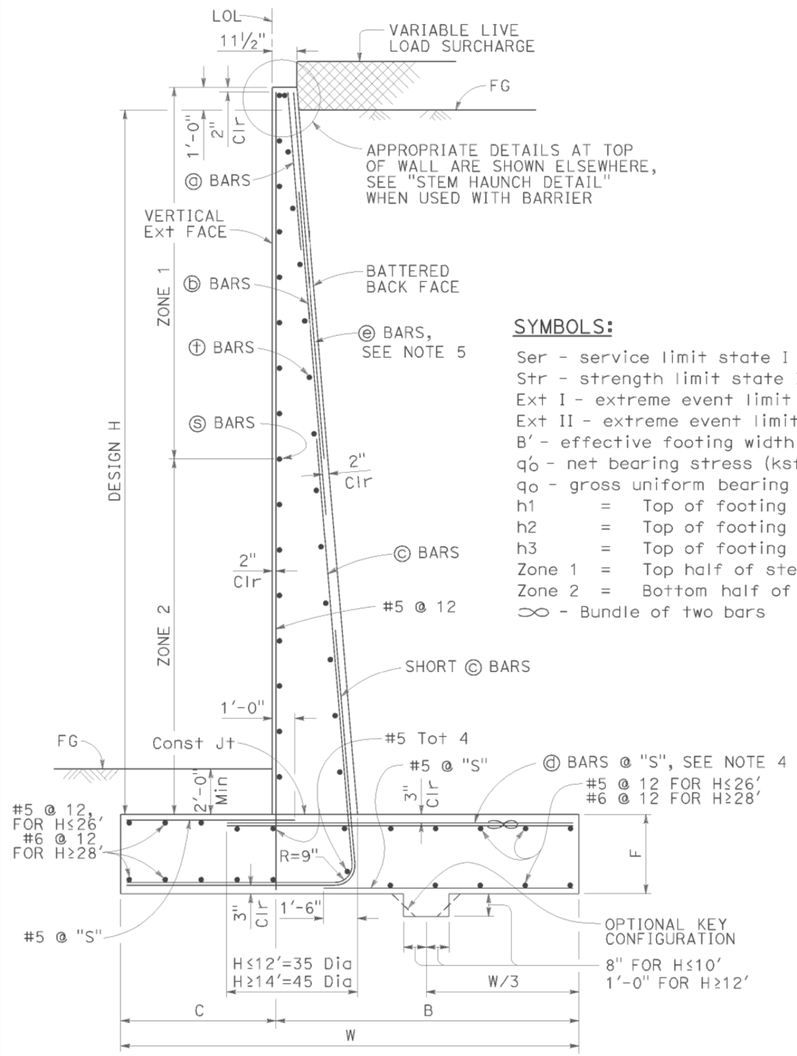

TYPICAL SECTION

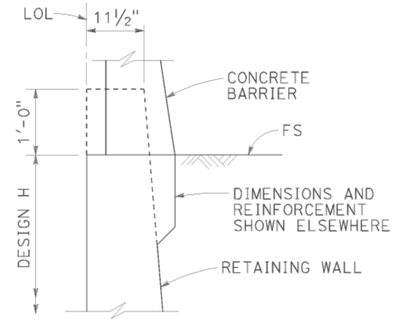

STEM HAUNCH DETAIL

SYMBOLS:

Ser - service limit state I
Str - strength limit state I
Ext I - extreme event limit state I
Ext II - extreme event limit state II
B' - effective footing width (ft)
q_o' - net bearing stress (ksf), OG assumed to be FG at toe
q_o - gross uniform bearing stress (ksf)
h1 = Top of footing to top of short ⓒ bar
h2 = Top of footing to top of ⓒ bar
h3 = Top of footing to top of ⓑ bar
Zone 1 = Top half of stem height
Zone 2 = Bottom half of stem height
∞ - Bundle of two bars

DESIGN CONDITIONS:

Design H may be exceeded by 6" before going to the next size. Special footing design is required where foundation material is incapable of supporting bearing stress listed in the table.

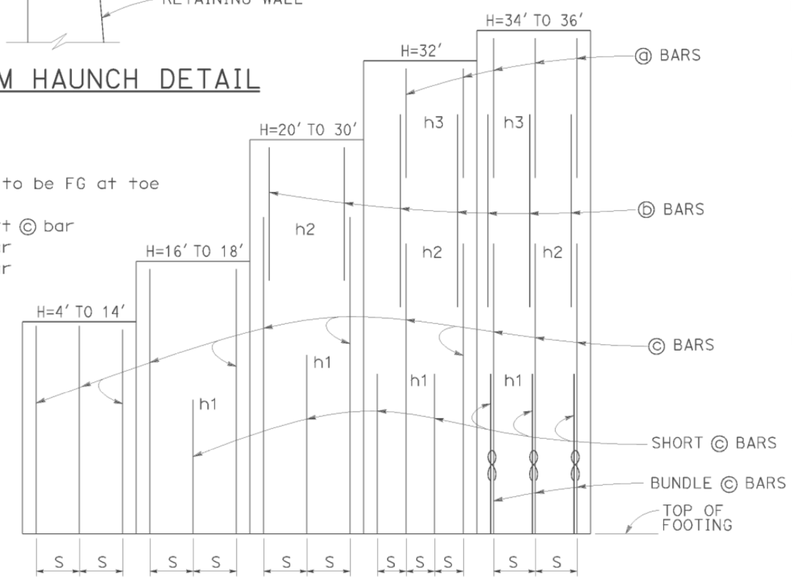

ELEVATION

DESIGN NOTES:

TO ACCOMPANY PLANS DATED 06-09-14

DESIGN: AASHTO LRFD Bridge Design Specifications, 4th Edition with California Amendments

LS: Varied surcharge on level ground surface

DC: Stem Architectural Treatment of thickness up to 6" of concrete (75 psf) considered

CT: 54 kip transverse force applied at He = 32", distributed over 10 feet at the top of wall and 1 : 1 distribution down and outward. Distribution below footing taken no less than 40'.

SEISMIC: $k_h = 0.2$, $k_v = 0.0$

SOIL: $\phi = 34°$, $\gamma = 120$ pcf

REINFORCED CONCRETE: f'c = 3,600 psi, fy = 60,000 psi

LOAD COMBINATIONS AND LIMIT STATES:

Service I: $Q = 1.00DC+1.00EV+1.00EH+1.00LS$
Strength I: $Q = \alpha DC+\beta EV+\eta EH+1.75LS$
Extreme I: $Q = 1.00DC+1.00EV+1.00EH+1.00EQD+1.00EQE$
Extreme II: $Q = 1.00DC+1.00EV+1.00EH+1.00CT$

Where:

Q: Force Effects
α: 1.25 or 0.90, Whichever Controls Design
β: 1.35 or 1.00, Whichever Controls Design
η: 1.50 or 0.90, Whichever Controls Design
DC: Dead Load of Structure Components
EH: Horizontal Earth Fill Pressure
EV: Vertical Earth Pressure from Earth Fill Weight
LS: Live Load Surcharge
EQE: Seismic Earth Pressure
EQD: Soil and Structural and Nonstructural Components Inertia
CT: Vehicular Collision Force

TABLE OF REINFORCING STEEL, DIMENSIONS AND DATA

DESIGN H	4'	6'	8'	10'	12'	14'	16'	18'	20'	22'	24'	26'	28'	30'	32'	34'	36'
W	6'-10"	7'-0"	7'-3"	7'-7"	8'-4"	9'-7"	10'-9"	12'-0"	13'-3"	14'-6"	15'-9"	17'-1"	18'-5"	19'-10"	21'-2"	22'-7"	24'-0"
C	2'-2"	2'-3"	2'-3"	2'-4"	2'-6"	3'-0"	3'-6"	4'-0"	4'-6"	5'-0"	5'-5"	6'-0"	6'-6"	7'-2"	7'-8"	8'-2"	9'-0"
B	4'-8"	4'-9"	5'-0"	5'-3"	5'-10"	6'-7"	7'-3"	8'-0"	8'-9"	9'-6"	10'-4"	11'-1"	11'-11"	12'-8"	13'-6"	14'-5"	15'-0"
F	1'-4"	1'-4"	1'-4"	1'-4"	1'-6"	1'-8"	1'-8"	1'-9"	1'-9"	1'-11"	2'-2"	2'-5"	2'-10"	3'-3"	3'-6"	4'-0"	4'-3"
BATTER	½: 12	½: 12	½: 12	½: 12	½: 12	½: 12	½: 12	½: 12	½: 12	½: 12	⅝: 12	⅝: 12	¾: 12	⅞: 12	1 : 12	1 : 12	1 : 12
SPACING "S"	9"	9"	9"	9"	9"	7"	6"	5"	6"	6"	6"	6"	6"	6"	6"	10"	8"
ⓐ BARS	-	-	-	-	-	-	-	-	-	-	-	-	-	-	#7	#7	#6
ⓑ BARS	-	-	-	-	-	-	-	-	#7	#7	#7	#7	#7	#7	#9	#9	#8
ⓒ BARS	#6	#6	#6	#6	#6	#6	#7	#7	#8	#9	#9	#10	#10	#10	#11	#11	#11
ⓓ BARS	#5	#5	#6	#6	#6	#6	#9	#8	#8	#9	#9	#10	#10	#10	#11	#11	#11
h1	-	-	-	-	-	-	5'-9"	5'-10"	8'-0"	9'-0"	10'-1"	11'-0"	12'-1"	13'-0"	13'-0"	12'-7"	11'-6"
h2	-	-	-	-	-	-	-	-	10'-5"	13'-0"	14'-7"	17'-6"	19'-0"	20'-5"	19'-0"	18'-0"	20'-2"
h3	-	-	-	-	-	-	-	-	-	-	-	-	-	-	21'-2"	21'-10"	24'-0"
ZONE 1 ⓢ BARS	#5 @ 18	#5 @ 18	#5 @ 18	#5 @ 18	#5 @ 18	#5 @ 18	#5 @ 18	#5 @ 18	#5 @ 18	#5 @ 18	#5 @ 12	#5 @ 12	#5 @ 12	#5 @ 12	#5 @ 12	#5 @ 12	#5 @ 12
ZONE 2 ⓢ BARS	#5 @ 18	#5 @ 18	#5 @ 18	#5 @ 18	#5 @ 18	#5 @ 18	#5 @ 12	#5 @ 12	#5 @ 12	#5 @ 12	#5 @ 12	#5 @ 12	#6 @ 12	#6 @ 12	#6 @ 12	#7 @ 12	#7 @ 12
ZONE 1 ⓣ BARS	#4 @ 18	#4 @ 18	#4 @ 18	#4 @ 18	#4 @ 18	#4 @ 18	#4 @ 18	#4 @ 18	#4 @ 18	#4 @ 18	#4 @ 12	#4 @ 12	#4 @ 18	#4 @ 12	#4 @ 12	#4 @ 12	#4 @ 12
ZONE 2 ⓣ BARS	#4 @ 18	#4 @ 18	#4 @ 18	#4 @ 18	#4 @ 18	#4 @ 18	#4 @ 18	#4 @ 18	#4 @ 18	#4 @ 18	#4 @ 12	#4 @ 12	#4 @ 12	#4 @ 12	#5 @ 12	#5 @ 12	#5 @ 12
Ser: B', q_o'	6.8, 0.7	6.5, 1.0	6.2, 1.3	6.0, 1.6	6.3, 2.0	7.5, 2.1	8.6, 2.2	9.8, 2.3	11.0, 2.4	12.1, 2.5	13.2, 2.8	14.4, 2.9	15.5, 3.1	16.8, 3.3	18.0, 3.5	19.2, 3.7	20.6, 3.7
Str: B', q_o	6.6, 1.6	5.0, 1.8	3.6, 2.3	3.0, 3.3	3.2, 4.0	4.3, 3.8	5.3, 3.7	6.4, 3.7	7.4, 3.8	8.2, 4.1	9.0, 4.4	9.9, 4.6	10.7, 4.9	11.7, 5.2	12.6, 5.4	13.6, 5.8	14.6, 5.9
Ext I: B', q_o	5.2, 1.1	4.7, 1.5	3.9, 2.2	3.1, 3.4	2.8, 4.8	3.2, 5.3	3.6, 5.7	4.1, 6.1	4.6, 6.4	5.0, 6.9	5.3, 7.6	5.8, 8.1	6.1, 8.9	6.7, 9.4	7.1, 10.0	7.5, 10.7	8.2, 10.9
Ext II: B', q_o	2.6, 2.2	2.7, 2.6	2.8, 3.1	2.9, 3.6	3.7, 3.6	5.2, 3.3	6.7, 3.1	8.3, 3.0	9.8, 3.0	11.2, 3.1	12.5, 3.2	13.9, 3.4	15.2, 3.6	16.7, 3.8	18.0, 4.0	19.3, 4.2	20.8, 4.3

NOTES:

1. For details not shown and drainage notes see RSP B3-5
2. For wall stem joint details see B0-3/3-3 and B0-3/3-4
3. At ⓒ bars:
   H ≤ 6', no splices are allowed within 1'-8" above the top of footing.
   H > 6', no splices are allowed within H/4 above the top of footing.
4. Bundle ⓓ bars for H = 34' & 36'.
5. Provide #6 @ 10" x 15'-0" ⓔ bars over a distance of 8'-0" measured from all expansion joints, begin wall and end wall locations. For H ≤ 14', hook ⓔ bar into footing and reduce bar length as needed to maintain Min Clr cover.

STATE OF CALIFORNIA
DEPARTMENT OF TRANSPORTATION

RETAINING WALL TYPE 1 (CASE 1)

NO SCALE

RSP B3-1A DATED APRIL 20, 2012 SUPPLEMENTS THE STANDARD PLANS BOOK DATED 2010.

REVISED STANDARD PLAN RSP B3-1A

2010 REVISED STANDARD PLAN RSP B3-1A

DATE PLOTTED => 25-AUG-2014
TIME PLOTTED => 09:27

Dist	COUNTY	ROUTE	POST MILES TOTAL PROJECT	SHEET No.	TOTAL SHEETS
02	Sha	299	0.3/7.1	388	401

REGISTERED CIVIL ENGINEER

April 20, 2012
PLANS APPROVAL DATE

Gary Wang No. C58298 Exp. 6-30-12 CIVIL — REGISTERED PROFESSIONAL ENGINEER — STATE OF CALIFORNIA

THE STATE OF CALIFORNIA OR ITS OFFICERS OR AGENTS SHALL NOT BE RESPONSIBLE FOR THE ACCURACY OR COMPLETENESS OF SCANNED COPIES OF THIS PLAN SHEET.

TO ACCOMPANY PLANS DATED 06-09-14

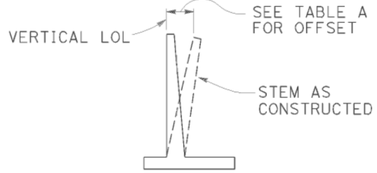

APPROXIMATE WALL OFFSET VALUES

Values for offseting forms to be determined by the Engineer.

TABLE A

H	OFFSET
4'-12'	H/200
14'-16'	H/160
18'-20'	H/140
22'-24'	H/130
26'-36'	2½"

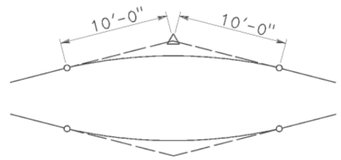

20'-0" VC AT TOP OF WALL SLOPE CHANGE

Where shown on the plans

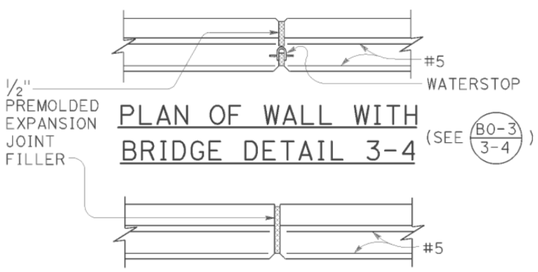

PLAN OF WALL WITH BRIDGE DETAIL 3-4

(SEE B0-3 / 3-4)

PLAN OF WALL WITH EXPANSION JOINT ONLY

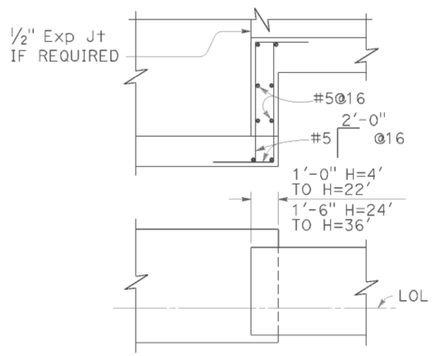

FOOTING STEP

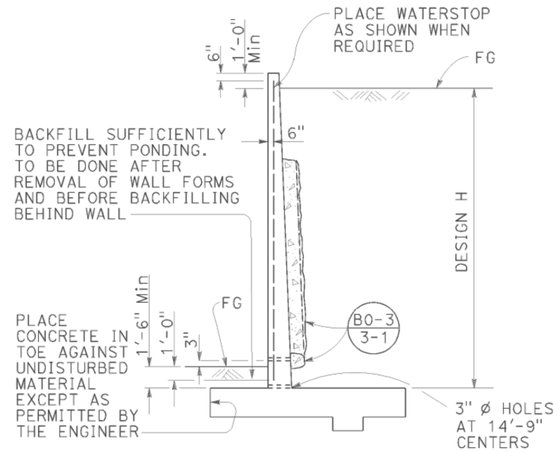

DESIGN AND DRAINAGE

DESIGN CONDITIONS:

Design "H" may be exceeded by 6" before going to the next size. Special footing design is required where foundation material is incapable of supporting bearing stress listed in table

Return wall not required unless shown elsewhere

DESIGN NOTES:

DESIGN: AASHTO LRFD Bridge Design Specifications, 4th edition with California Amendments

LIVE LOAD: Surcharge on level ground surface

SOIL: ϕ = 34°
γ = 120 pcf

REINFORCED CONCRETE: fy = 60,000 psi
fc' = 3,600 psi

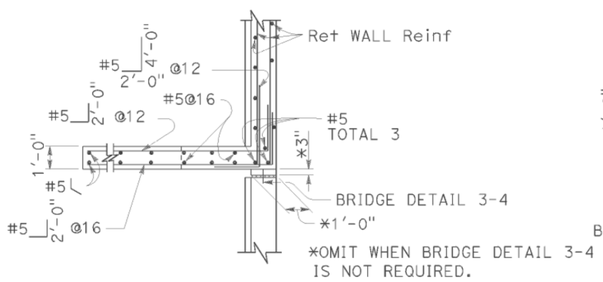

PLAN

(For return wall Type "A")

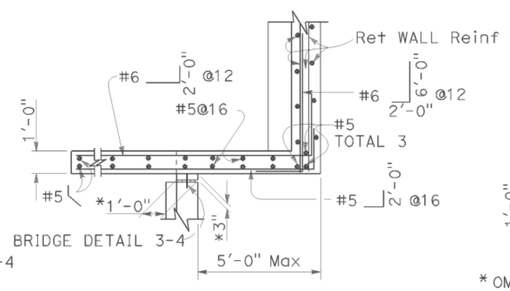

PLAN

(For return wall Type "B")

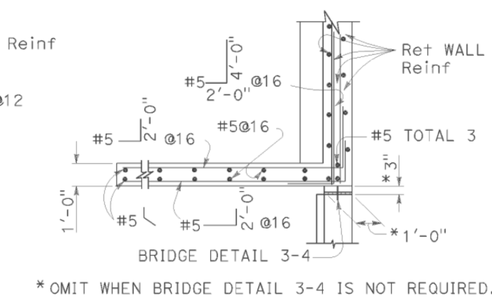

PLAN

(For return wall Type "C")

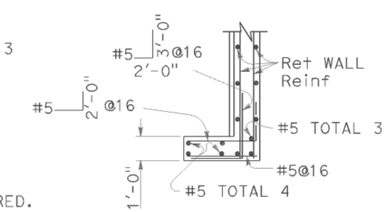

PLAN

(For return wall Type "D")

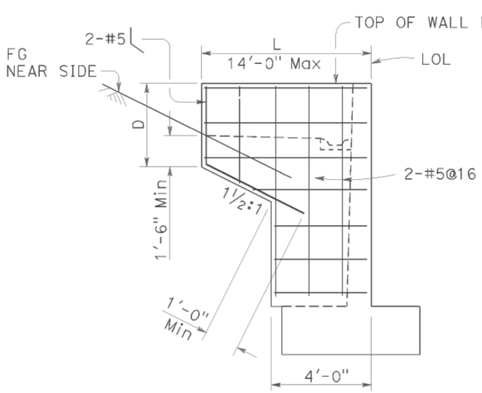

ELEVATION

RETURN WALL TYPE "A"

Use where H=8' or less

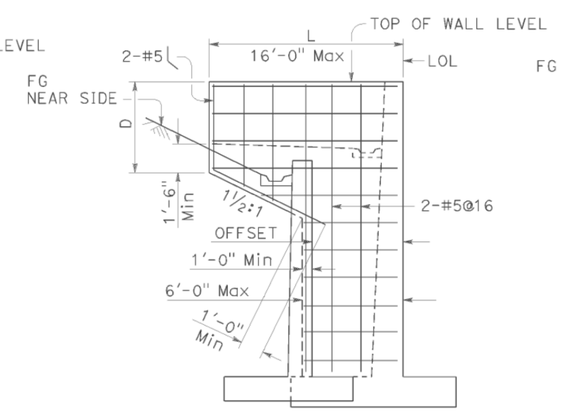

ELEVATION

RETURN WALL TYPE "B"

Use where H=10' or more on offset walls

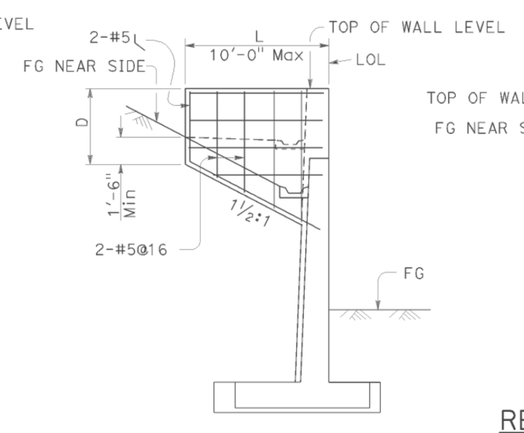

ELEVATION

RETURN WALL TYPE "C"

Use where H=10' or more on straight walls

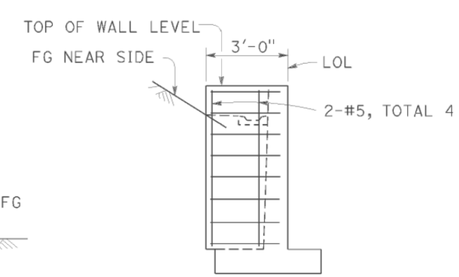

ELEVATION

RETURN WALL TYPE "D"

Use where H=6' or less

STATE OF CALIFORNIA
DEPARTMENT OF TRANSPORTATION

RETAINING WALL DETAILS No. 1

NO SCALE

RSP B3-5 DATED APRIL 20, 2012 SUPERSEDES STANDARD PLAN B3-5 DATED MAY 20, 2011 - PAGE 277 OF THE STANDARD PLANS BOOK DATED 2010.

REVISED STANDARD PLAN RSP B3-5

2010 REVISED STANDARD PLAN RSP B3-5

DATE PLOTTED => 25-AUG-2014
TIME PLOTTED => 09:27

Dist	COUNTY	ROUTE	POST MILES TOTAL PROJECT	SHEET No.	TOTAL SHEETS
02	Sha	299	0.3/7.1	389	401

REGISTERED CIVIL ENGINEER

October 21, 2011
PLANS APPROVAL DATE

REGISTERED PROFESSIONAL ENGINEER Tillat Satter No. C42892 Exp. 3-31-12 CIVIL STATE OF CALIFORNIA

THE STATE OF CALIFORNIA OR ITS OFFICERS OR AGENTS SHALL NOT BE RESPONSIBLE FOR THE ACCURACY OR COMPLETENESS OF SCANNED COPIES OF THIS PLAN SHEET.

TO ACCOMPANY PLANS DATED 06-09-14

2010 REVISED STANDARD PLAN RSP B11-47

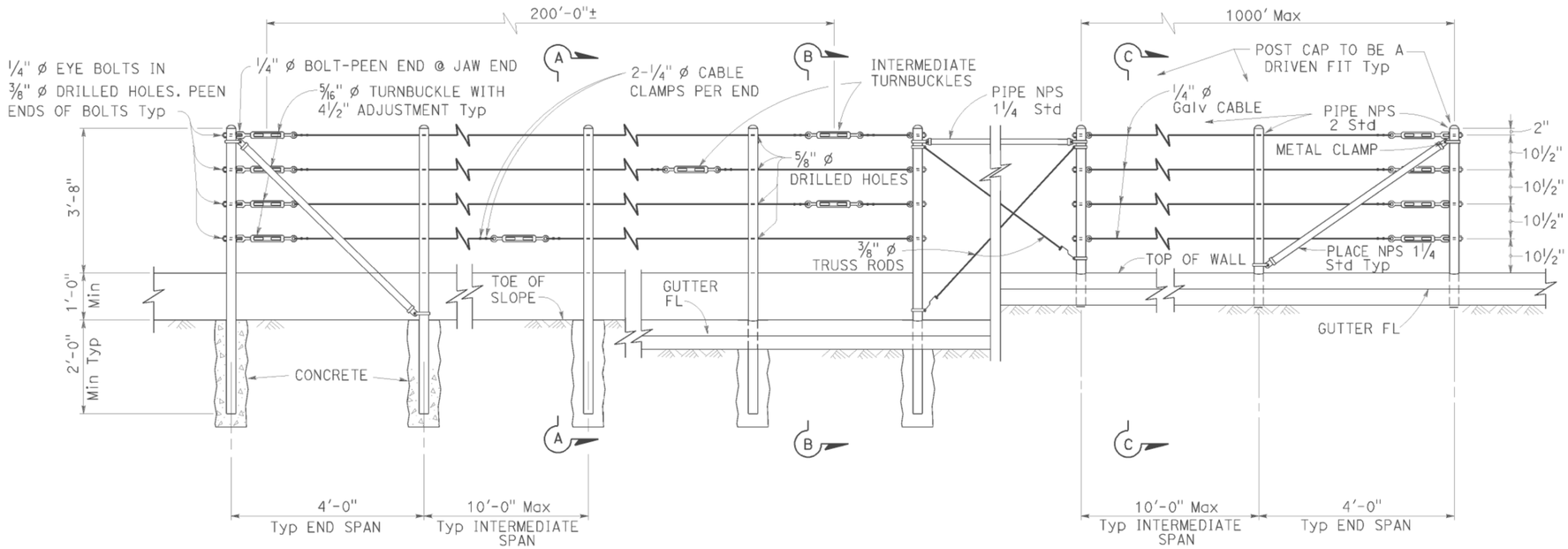

EXISTING WALL (WITHOUT GUTTER)
Existing

RETAINING WALL (WITH GUTTER)
Existing

RETAINING WALL (WITH GUTTER)
New construction

ELEVATION

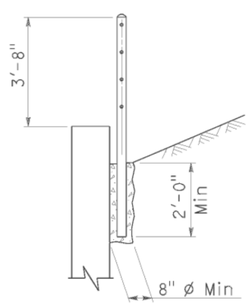

SECTION A-A
Existing

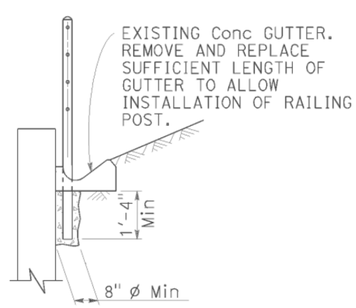

SECTION B-B
Existing

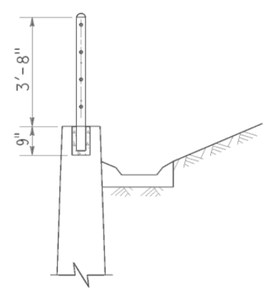

SECTION C-C
New construction

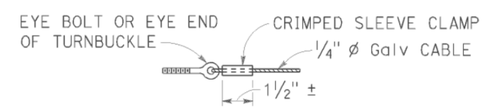

ALTERNATIVE CABLE CONNECTION

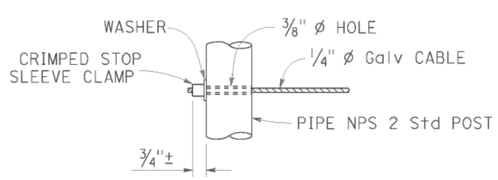

ALTERNATIVE DEAD END ANCHORAGE

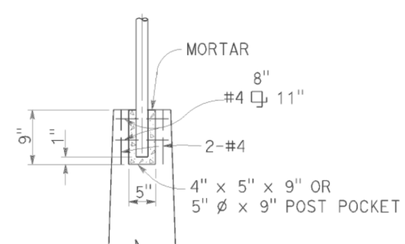

POST POCKET

NOTES:

1. Maximum distance between turnbuckles shall be 200'-0"±.
2. Intermediate turnbuckles to be placed in adjacent spans.
3. Cable shall not be spliced between intermediate turnbuckles and end posts.
4. Posts to be vertical.
5. Alignment of holes in posts may vary to conform to slope of top of retaining wall.
6. The Contractor shall verify all dependent dimensions in the field before ordering or fabricating any material.
7. Line posts shall be braced horizontally and trussed diagonally in both directions at intervals not to exceed 1000'.
8. Post pockets to be centered in top of wall.
9. Typical end spans, braced in both directions, shall be constructed at changes in line where the angle of deflection is 15° or more.
10. Provide thimbles at all cable loops.

STATE OF CALIFORNIA
DEPARTMENT OF TRANSPORTATION

CABLE RAILING

NO SCALE

RSP B11-47 DATED OCTOBER 21, 2011 SUPERSEDES STANDARD PLAN B11-47 DATED MAY 20, 2011 - PAGE 293 OF THE STANDARD PLANS BOOK DATED 2010.

REVISED STANDARD PLAN RSP B11-47

DATE PLOTTED => 25-AUG-2014
TIME PLOTTED => 09:28

Dist	COUNTY	ROUTE	POST MILES TOTAL PROJECT	SHEET No.	TOTAL SHEETS
02	Sha	299	0.3/7.1	390	401

REGISTERED CIVIL ENGINEER

November 15, 2013
PLANS APPROVAL DATE

REGISTERED PROFESSIONAL ENGINEER — Tillat Satter — No. C42892 — Exp. 3-31-14 — CIVIL — STATE OF CALIFORNIA

THE STATE OF CALIFORNIA OR ITS OFFICERS OR AGENTS SHALL NOT BE RESPONSIBLE FOR THE ACCURACY OR COMPLETENESS OF SCANNED COPIES OF THIS PLAN SHEET.

TO ACCOMPANY PLANS DATED 06-09-14

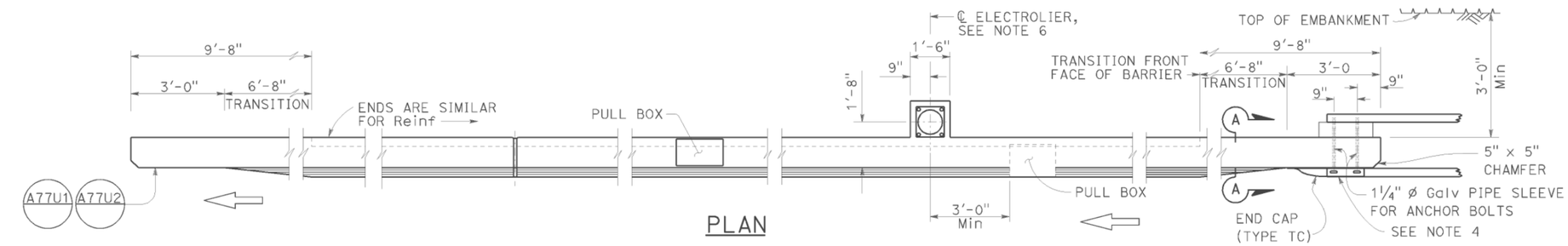

PLAN

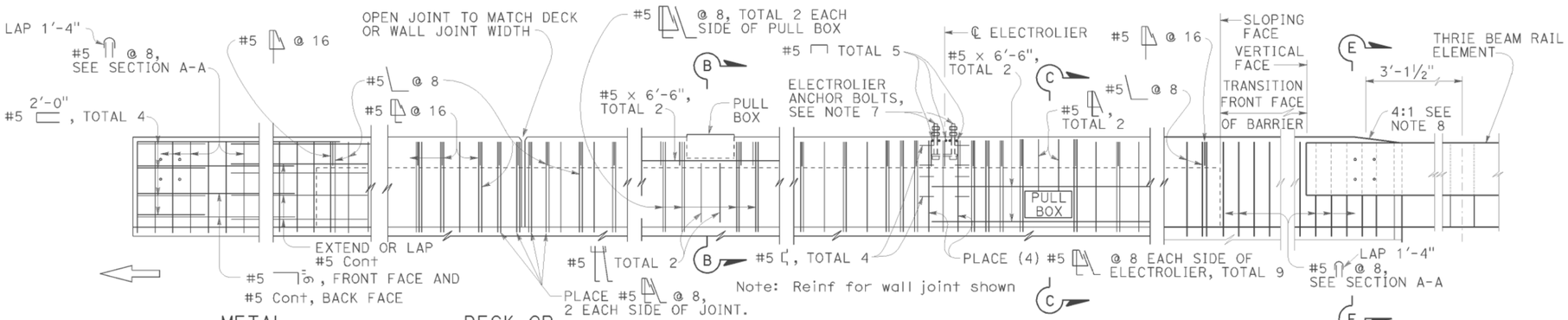

METAL RAILING CONNECTION

DECK OR WALL JOINT

ELEVATION

ELECTROLIER
See Note F

TYPE 736A

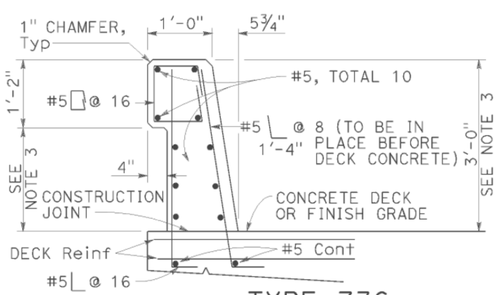

TYPE 736

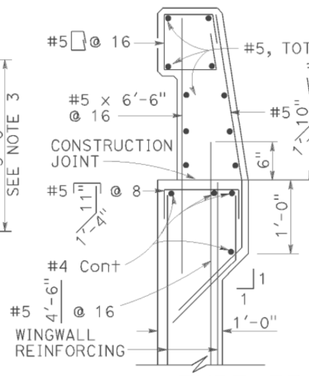

TYPE 736A

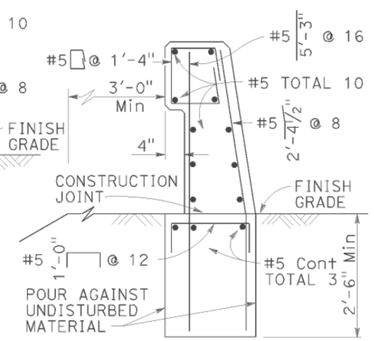

TYPE 736B

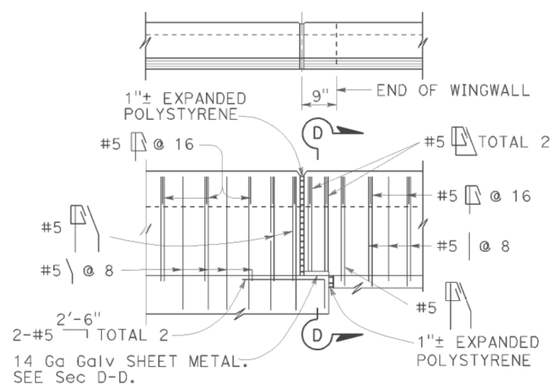

TYPE 736A TYPE 736B

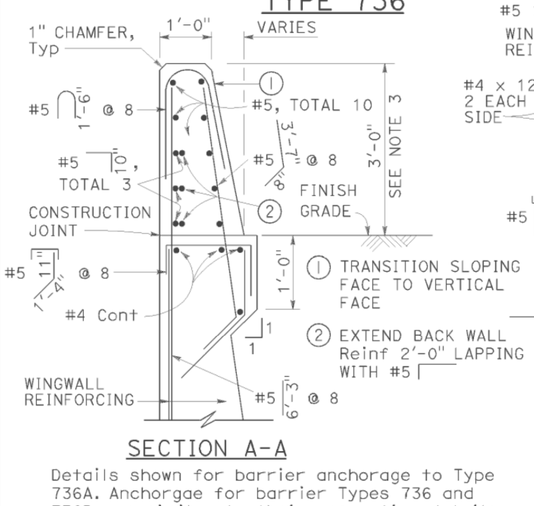

SECTION A-A

Details shown for barrier anchorage to Type 736A. Anchorgae for barrier Types 736 and 736B are similar to their respective details.

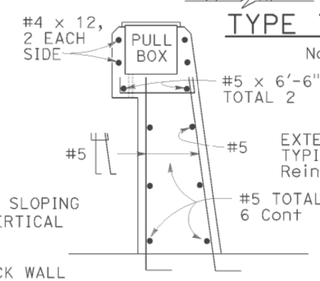

SECTION B-B

Note: Types 736A & 736B are similar to Type 736 except as noted

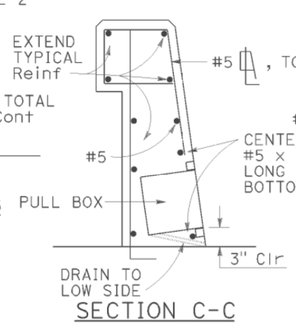

SECTION C-C
See Notes

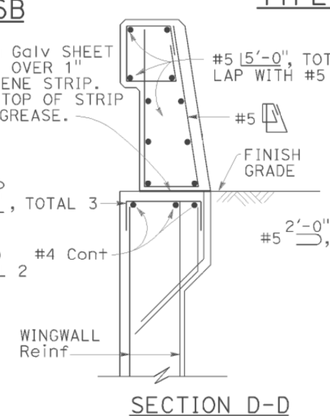

SECTION D-D

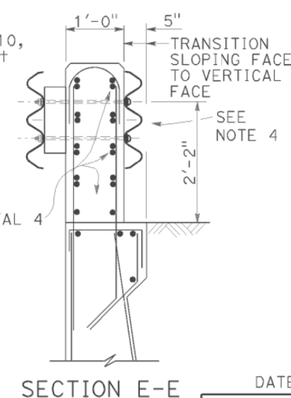

SECTION E-E
See Notes

NOTES:

1. Walls are to be backfilled before barrier is placed.
2. Clearance to reinforcing steel in barrier to be 1", except as noted. Longitudinal reinforcement to stop at all expansion joints.
3. Dimensions may vary with roadway cross slope and with certain thickness of surfacing. See Project Plans.
4. For typical metal railing connection details not shown, see Revised Standard Plans RSP A77U1 and RSP A77U2.
5. See Standard Plans ES-9A, ES-9B, ES-9C, ES-9D and ES-9E for electrical details. The maximum number of conduits in the barrier is limited to two 2" conduits along with one 3" conduit. When a 3" conduit is used, it is restricted to the base of the barrier.
6. For electrolier mounting details, See Standard Plans ES-6A and ES-6B.
7. Minimum concrete edge distance, to the reinforcing shown, shall be maintained. Edge distance may be adjusted to accommodate increase in concrete cover for architectual treatment.
8. Taper the top of the end of the bridge railing at 4:1 to match the top elevation of the thrie beam rail element.

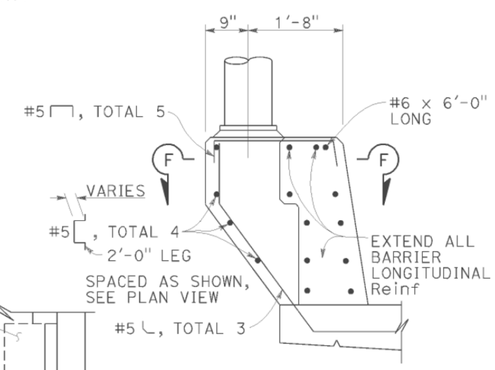

PEDESTAL ELEVATION

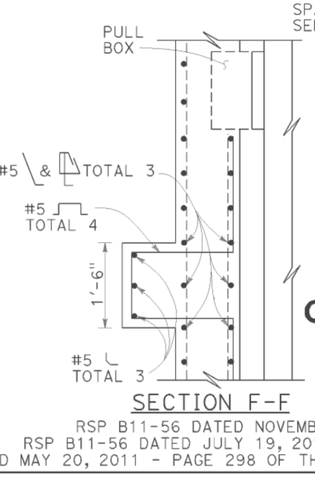

SECTION F-F

STATE OF CALIFORNIA
DEPARTMENT OF TRANSPORTATION

CONCRETE BARRIER TYPE 736

NO SCALE

RSP B11-56 DATED NOVEMBER 15, 2013 SUPERSEDES RSP B11-56 DATED JULY 19, 2013 AND STANDARD PLAN B11-56 DATED MAY 20, 2011 - PAGE 298 OF THE STANDARD PLANS BOOK DATED 2010.

REVISED STANDARD PLAN RSP B11-56

2010 REVISED STANDARD PLAN RSP B11-56

DATE PLOTTED => 25-AUG-2014
TIME PLOTTED => 09:26

USERNAME => s115152
DGN FILE => 23e410va021.dgn

P:\proj1\02\3E410_plans\pse\23e410va021.dgn

10-4-13

Dist	COUNTY	ROUTE	POST MILES TOTAL PROJECT	SHEET No.	TOTAL SHEETS
02	Sha	299	0.3/7.1	391	401

REGISTERED CIVIL ENGINEER

July 18, 2014
PLANS APPROVAL DATE

REGISTERED PROFESSIONAL ENGINEER
Carl M. Duan
No. C59976
Exp. 6-30-16
CIVIL
STATE OF CALIFORNIA

THE STATE OF CALIFORNIA OR ITS OFFICERS OR AGENTS SHALL NOT BE RESPONSIBLE FOR THE ACCURACY OR COMPLETENESS OF SCANNED COPIES OF THIS PLAN SHEET.

TO ACCOMPANY PLANS DATED 06-09-14

DESIGN NOTES:

Design: AASHTO LRFD Bridge Design Specifications, 4th edition with California Amendments. ACPA DESIGN DATA 1, October 2007. INDIRECT DESIGN METHOD

Soil: w Fe = 162 pcf Installation Type 1
w Fe = 168 pcf Installation Types 2 & 3
w = Unit weight of soil (pcf)
Fe = Soil-structure interaction factor

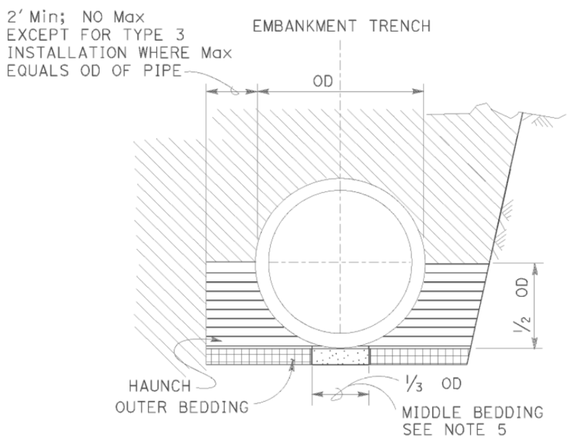

BACKFILL

LEGEND:

- ROADWAY EMBANKMENT
- STRUCTURE BACKFILL (CULVERT) FOR HAUNCH SEE NOTE 6
- STRUCTURE BACKFILL (CULVERT) FOR OUTER BEDDING SEE NOTE 6
- LOOSE BACKFILL
- STRUCTURE EXCAVATION (CULVERT)

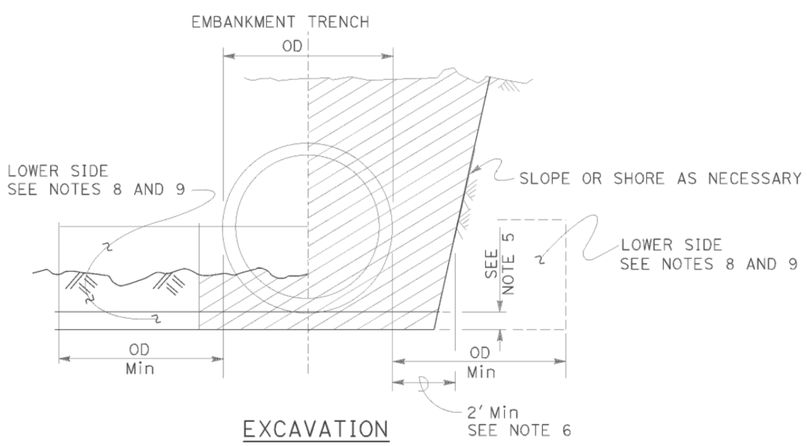

EXCAVATION

INSTALLATION TYPE 1:

The haunch and outer bedding shall be compacted to a minimum 90 percent relative compaction. In addition, the minimum sand equivalent in these areas shall be 30 and the maximum percentage passing the No. 200 sieve size shall be 12.

INSTALLATION TYPE 2:

The haunch and outer bedding shall be compacted to a minimum 90 percent relative compaction. In addition, the minimum sand equivalent in these areas shall be 25.

INSTALLATION TYPE 3:

The haunch and outer bedding shall be compacted to a minimum 85 percent relative compaction. 90 percent relative compaction will be required where the fill over the pipe is less than 4′-0″ or ½ OD. In addition, the minimum sand equivalent in these areas shall be 25 and the material shall not contain rocks, broken concrete, or other solid material exceeding 3″ in greatest dimension.

INSTALLATION TYPE 1

MINIMUM CLASS AND D-LOAD	COVER	
	60″ Dia AND SMALLER	OVER 60″ Dia TO 120″ Dia Max
CLASS II 1000D	14.9′	12.9′
CLASS III 1350D	15.0′ - 21.9′	13.0′ - 18.9′
CLASS III SPECIAL 1700D	22.0′ - 27.9′	19.0′ - 24.9′
CLASS IV 2000D	28.0′ - 32.9′	25.0′ - 29.9′
CLASS IV SPECIAL 2500D	33.0′ - 41.9′	30.0′ - 38.9′
CLASS V 3000D	42.0′ - 49.9′	39.0′ - 46.9′
CLASS V SPECIAL 3600D	50.0′ - 60.0′	47.0′ - 58.0′

INSTALLATION TYPE 2

MINIMUM CLASS AND D-LOAD	COVER	
	60″ Dia AND SMALLER	OVER 60″ Dia TO 120″ Dia Max
CLASS II 1000D	11.9′	9.9′
CLASS III 1350D	12.0′ - 15.9′	10.0′ - 14.9′
CLASS III SPECIAL 1700D	16.0′ - 20.9′	15.0′ - 19.9′
CLASS IV 2000D	21.0′ - 24.9′	20.0′ - 23.9′
CLASS IV SPECIAL 2500D	25.0′ - 31.9′	24.0′ - 30.9′
CLASS V 3000D	32.0′ - 37.9′	31.0′ - 37.9′
CLASS V SPECIAL 3600D	38.0′ - 46.0′	38.0′ - 46.0′

INSTALLATION TYPE 3

MINIMUM CLASS AND D-LOAD	COVER	
	60″ Dia AND SMALLER	OVER 60″ Dia TO 120″ Dia Max
CLASS II 1000D	8.9′	5.9′
CLASS III 1350D	9.0′ - 11.9′	6.0′ - 10.9′
CLASS III SPECIAL 1700D	12.0′ - 15.9′	11.0′ - 13.9′
CLASS IV 2000D	16.0′ - 18.9′	14.0′ - 17.9′
CLASS IV SPECIAL 2500D	19.0′ - 24.9′	18.0′ - 22.9′
CLASS V 3000D	25.0′ - 29.9′	23.0′ - 28.9′
CLASS V SPECIAL 3600D	30.0′ - 36.0′	29.0′ - 35.0′

NOTES:

1. Unless otherwise shown on the plans or specified in the special provision, the Contractor shall have the option of selecting the class of RCP and the type of installation to be used, provided the height of cover does not exceed the value shown for the RCP selected.
   Example: 24″ RCP culvert with maximum cover of 24′-0″ the options are:
   a) Class III Special or stronger with Installation Type 1.
   b) Class IV or stronger with Installation Type 2.
   c) Class IV Special or stronger with Installation Type 3.
   Cover is defined as the maximum vertical distance from top of the pipe to finished grade within the length of any given culvert.
2. The class of RCP and Installation Type selected shall be the same throughout the length of any given culvert.
3. The "length of any culvert" is defined as the culvert between:
   a) Successive drainage structure (inlets, junction boxes, headwalls, etc.).
   b) A drainage structure and the inlet or outlet end of the culvert.
   c) The inlet and outlet end of the culvert when there are no intervening drainage structures.
4. Oval and arch shaped RCP shall not be used.
5. Bedding depth: 1/25 OD Min, not less than 3″.
6. Slurry cement backfill may be substituted for backfill in the outer bedding and haunch areas. If slurry is used, the outer and middle beddings shall be omitted. Prior to installation, the soil under the middle ⅓ of the outside diameter of the pipe shall be softened by scarifying or other means to a minimum depth of 1/25 OD, but not less than 3″. Where slurry cement backfill is used, clear distance to trench wall may be reduced as set forth in the Standard Specifications.
7. Backfill shall be placed full width of excavation except where dimensions are shown for backfill width or thickness. Dimensions shown are minimum.
8. Lower side shall be suitable material as determined by the Engineer. Otherwise it shall be considered unsuitable as set forth in of the Standard Specifications. See Note 9.
9. Where the pipe is placed in a trench, if the trench walls are sloped at 5 vertical to 1 horizontal or steeper for at least 90 percent of the trench height or up to not less than 12″ from the grading plane, the firmness of the soil in the lower side need not be considered.
10. Non-reinforced precast concrete pipe sizes 3′-0″ or smaller may be placed under installation Types 1, 2 or 3.

STATE OF CALIFORNIA
DEPARTMENT OF TRANSPORTATION

EXCAVATION AND BACKFILL CONCRETE PIPE CULVERTS INDIRECT DESIGN METHOD

NO SCALE

RSP A62DA DATED JULY 18, 2014 SUPERSEDES STANDARD PLAN A62DA DATED MAY 20, 2011 - PAGE 24 OF THE STANDARD PLANS BOOK DATED 2010.

REVISED STANDARD PLAN RSP A62DA

2010 REVISED STANDARD PLAN RSP A62DA

DATE PLOTTED => 25-AUG-2014
TIME PLOTTED => 09:28

Dist	COUNTY	ROUTE	POST MILES TOTAL PROJECT	SHEET No.	TOTAL SHEETS
02	Sha	299	0.3/7.1	392	401

REGISTERED CIVIL ENGINEER

July 18, 2014
PLANS APPROVAL DATE

REGISTERED PROFESSIONAL ENGINEER Carl M. Duan No. C59976 Exp. 6-30-16 CIVIL STATE OF CALIFORNIA

THE STATE OF CALIFORNIA OR ITS OFFICERS OR AGENTS SHALL NOT BE RESPONSIBLE FOR THE ACCURACY OR COMPLETENESS OF SCANNED COPIES OF THIS PLAN SHEET.

TO ACCOMPANY PLANS DATED 06-09-14

DESIGN NOTES:

Design Specifications:
AASHTO LRFD Bridge Design Specifications, 4th Edition with California Amendments.

Loading:
Live load: (AASHTO LRFD 3.6.1.2)
HL-93 consists of design truck or design tandem and design lane load.

Impact Factor: (Apply to roof slab only)
$IM = 33(1.0-0.125D_E) \geq 0\%$ (AASHTO LRFD 3.6.2.2)
D_E = minimum depth of earth cover

Earth load:
Earth pressure for two conditions:
140 pcf vertical, 42 pcf horizontal
140 pcf vertical, 140 pcf horizontal

Load Factors:
AASHTO LRFD Table 3.4.1.1 & Table 3.4.1.2

Unit stresses:
f'_c = 3600 psi
f_y = 60,000 psi

Distribution "d" bars:
Up to and including 10'-0" cover
Express as a percentage of main positive reinforcement required: $\frac{100}{\sqrt{S}}$, Max 50%,
Over 10'-0" cover,
4 @ 12 maximum

Shear:
$V_c = \{2.14\sqrt{f'_c}+4600\frac{A_s}{bd_e}\frac{V_u d_e}{M_u}\}b.d_e \leq 4.0\sqrt{f'_c}b.d_e$ (Pounds)
V_c shall not be less than $3.00\sqrt{f'_c}b.d_e$ for frame members and $2.5\sqrt{f'_c}b.d_e$ for simply supported members.

Exclusion:
Compressive reinforcement and negative moment reduction (for continuity) do not apply.
Axial loading on members has not been considered.

CONSTRUCTION NOTES:

Construction loads:
Strutting required as shown on Standard Plan D88.
Strutting may be required on culvert extensions when existing parapet is removed.

Expansion joints:
Invert:
No expansion joints shall be permitted.

Roof and Walls:
When cover is less than span length-
Place ½" premolded expansion joint filler at 30'-0" ± centers outside the paved roadway lanes and place Bridge Detail 3-2, Standard Plan B0-3, at 30'-0" centers under paved roadway lanes.
When cover is more than span length-
Place ½" premolded expansion joint filler at 30'-0" ± centers and additional ½" premolded expansion joints at locations of change in foundation character, as directed by the Engineer.

Construction joints:
Temporary joints may be permitted if normal (or radial) to ℄ of RCB. Otherwise, the contractor is to submit a proposal for consideration.

Cutoff walls:
4'-0" cutoff walls are to be provided at inlet and/or outlet unless adjacent channel is lined and unless otherwise shown. These walls are to be extended if scour conditions warrant.

Earthwork:
See Standard Plan A62E.

Backfill:
See Standard Specifications, except that the difference in level of backfill (against outside walls) shall not exceed 2'-0".

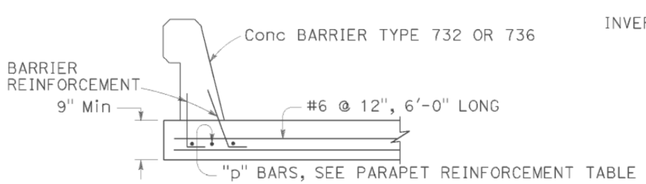

BARRIER SECTION (30'-0" MINIMUM)

GENERAL NOTES:

Designation:
Standard single or multiple box culverts are shown on plans as span times height with maximum cover over roof thus: 8' x 5' RCB with 10' or double 10' x 5' RCB with 20', followed by alternatives.

Alternatives:
Single cell: Invert will be sloped unless "trapezoidal invert", "flat invert" or "V invert" is included in designation.
Multiple cell: Invert will be vee unless "flat invert" is specified. Ends of culvert will be rounded unless "square ends" are designated. Parapets will be as shown unless designated in plans. Such designations may be different for inlet and outlet ends.

Quantities:
Quantities do not include the following:
- Concrete for parapet, paving notches and cut-off wall.
- Reinforcement for 2% splices, parapets, paving notches, cut-off wall and additional required bars for exposed top slab (D-80, Note 9).

Reinforcement placement:
Main reinforcement is to be placed transversely or, for curved culverts, radially. When radial, reinforcing spacing of the "a", "f" and "g" bars is measured along the centerline. Stagger splices not shown. Hooks may be rotated or tilted, as necessary, for clearance.

Special reinforcement coverage:
Box standard plans are not to be used for culverts in a corrosive environment or where there is a severe abrasive flow condition or in freeze-thaw locations.

Special design:
Required for culverts with conditions, loads, design bearing pressures or sizes greater than those given on this plan or Standard Plans D80 & D81. Also required for multiple cell culverts with unequal spans. For culverts with railroad loading, see the current AREMA design specification.

3 or more cells:
For culverts with more than two cells, use dimensions and reinforcement for the standard "double box culvert" and adjust quantities accordingly.

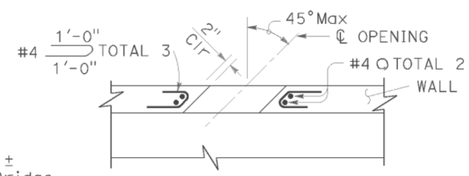

PART PLAN-SECTION

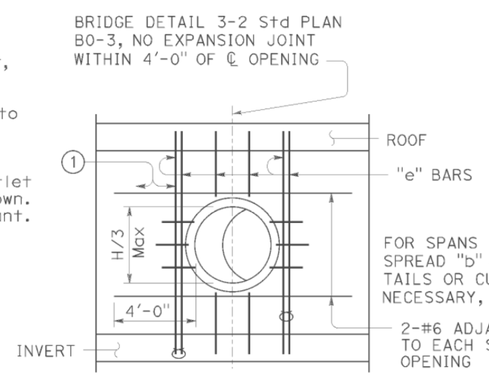

LONGITUDINAL SECTION

UTILITY OPENING-WALL

H=Height of box

1 Adjacent to each side of the opening, place additional bars equivalent to half the interrupted main reinforcement.

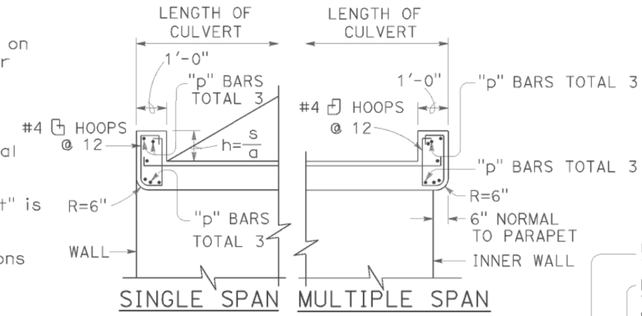

PARAPET DETAIL

s = Clear span (ft)
a = 12 cosine skew angle
h = Height, 1'-0" Min

PARAPET "p" BARS			
SPAN \ SKEW ANGLE	0° TO 15°	16° TO 30°	31° TO 45°
4'	#4	#4	#4
6'	#4	#4	#5
8'	#4	#5	#6
10'	#5	#6	#7
12'	#6	#7	#8
14'	#7	#8	#9

PARAPET REINFORCEMENT

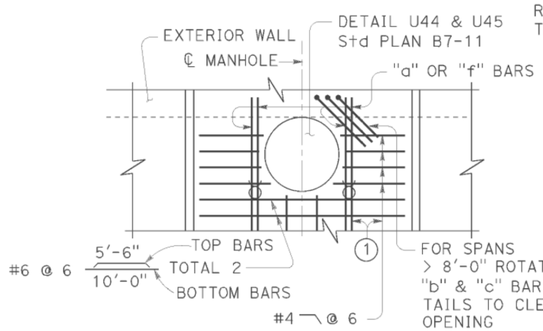

PART PLAN

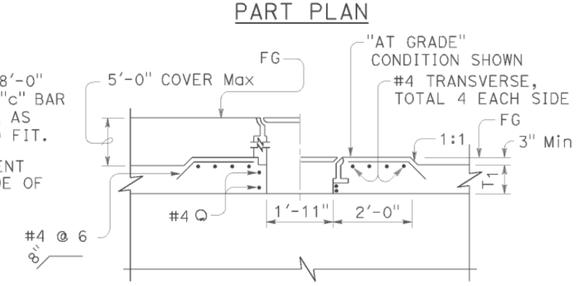

PART LONGITUDINAL SECTION

MANHOLE

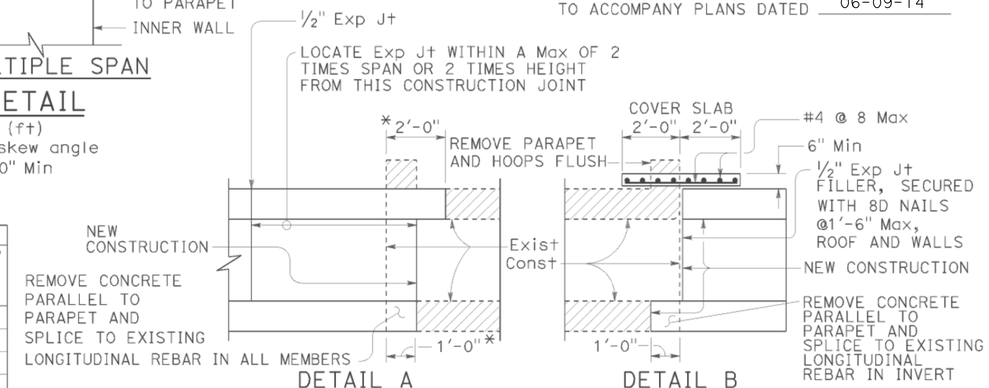

DETAIL A

20° maximum skew as shown. If existing longitudinal and transverse reinforcing bars in top slab are lap spliced with new longitudinal and transverse reinforcing bars, the 20° skew may be exceeded. Lap splicing may require removal of top slab in excess of 2'-0" shown.

DETAIL B

Single cell only, no skew allowed, 1'-0" minimum cover.

* Measured perpendicular to parapet

CULVERT EXTENSION

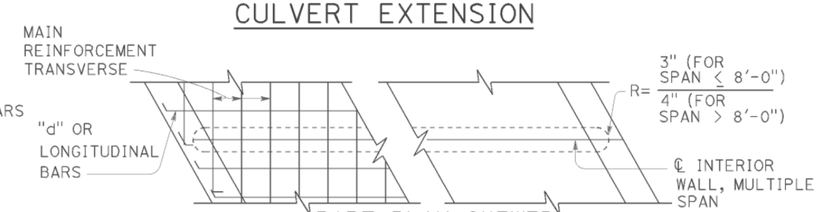

PART PLAN-SKEWED

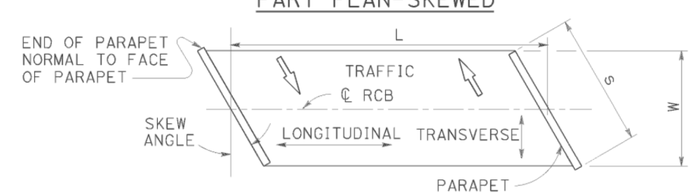

RCB TERMINOLOGY

STATE OF CALIFORNIA
DEPARTMENT OF TRANSPORTATION

CAST-IN-PLACE REINFORCED CONCRETE BOX CULVERT MISCELLANEOUS DETAILS

NO SCALE

RSP D82 DATED JULY 18, 2014 SUPERSEDES STANDARD PLAN D82 DATED MAY 20, 2011 - PAGE 174 OF THE STANDARD PLANS BOOK DATED 2010.

REVISED STANDARD PLAN RSP D82

2010 REVISED STANDARD PLAN RSP D82

DATE PLOTTED => 25-AUG-2014
TIME PLOTTED => 09:28

Dist	COUNTY	ROUTE	POST MILES TOTAL PROJECT	SHEET No.	TOTAL SHEETS
02	Sha	299	0.3/7.1	393	401

REGISTERED CIVIL ENGINEER

July 18, 2014
PLANS APPROVAL DATE

Carl M. Duan No. C59976 Exp. 6-30-16 CIVIL — REGISTERED PROFESSIONAL ENGINEER — STATE OF CALIFORNIA

THE STATE OF CALIFORNIA OR ITS OFFICERS OR AGENTS SHALL NOT BE RESPONSIBLE FOR THE ACCURACY OR COMPLETENESS OF SCANNED COPIES OF THIS PLAN SHEET.

TO ACCOMPANY PLANS DATED 06-09-14

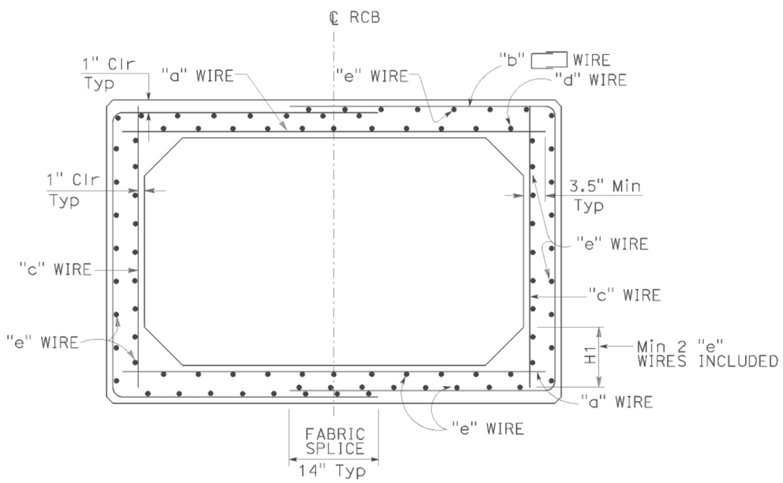

TYPICAL SECTION - SPANS 4'-0" THRU 12'-0"

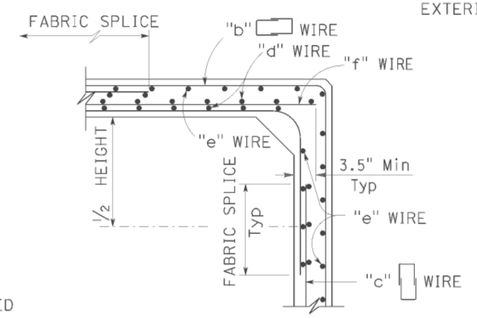

ALTERNATIVE DETAILING OPTION

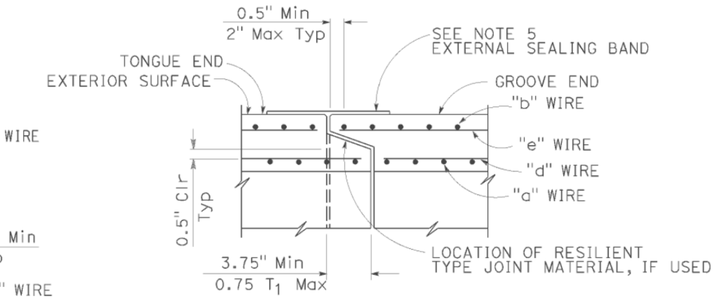

END JOINT DETAIL

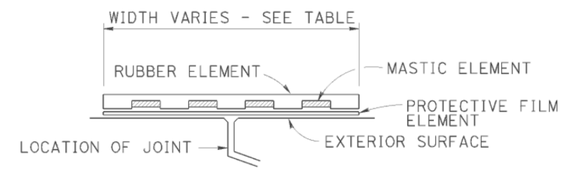

EXTERNAL SEALING BAND SCHEMATIC

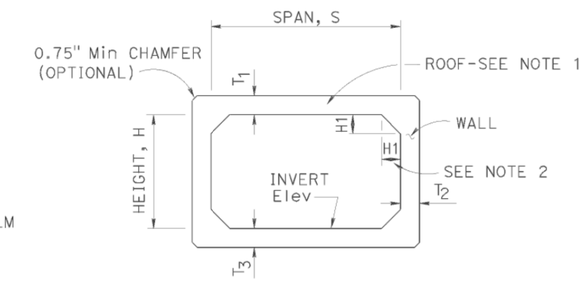

SCHEMATIC

TABLE	
SPAN	EXTERNAL SEALING BAND WIDTH
4'-6'	9"
7'-8'	11"
10'-12'	13"

SPAN, S			4'						5'								6'								7'									
HEIGHT, H			2'		3'		4'		2'		3'		4'		5'		3'		4'		5'		6'		3'		4'		5'		6'		7'	
MAXIMUM EARTH COVER			10'	20'	10'	20'	10'	20'	10'	20'	10'	20'	10'	20'	10'	20'	10'	20'	10'	20'	10'	20'	10'	20'	10'	20'	10'	20'	10'	20'	10'	20'	10'	20'
CONCRETE (INCH)	ROOF	T_1	5.5"	5.5"	5.5"	5.5"	5.5"	5.5"	6"	6"	6"	6"	6"	6"	6"	6"	7"	7"	7"	7"	7"	7"	7"	7"	8"	8"	8"	8"	8"	8"	8"	8"	8"	8"
	SIDE WALL	T_2	5.5"	5.5"	5.5"	5.5"	5.5"	5.5"	6"	6"	6"	6"	6"	6"	6"	6"	7"	7"	7"	7"	7"	7"	7"	7"	8"	8"	8"	8"	8"	8"	8"	8"	8"	8"
	INVERT	T_3	5.5"	5.5"	5.5"	5.5"	5.5"	5.5"	6"	6"	6"	6"	6"	6"	6"	6"	7"	7"	7"	7"	7"	7"	7"	7"	8"	8"	8"	8"	8"	8"	8"	8"	8"	8"
MINIMUM WELDED WIRE FABRIC ($inch^2/ft$)		"a"	.33	.47	.34	.49	.34	.50	.40	.62	.41	.62	.42	.64	.43	.64	.44	.67	.45	.70	.46	.71	.47	.72	.47	.72	.48	.75	.50	.78	.50	.79	.51	.80
		"b"	.23	.28	.23	.25	.21	.23	.26	.36	.24	.36	.24	.33	.24	.30	.28	.44	.27	.40	.27	.37	.27	.38	.33	.52	.31	.48	.30	.45	.30	.43	.30	.48
		"c"	.11	.11	.11	.12	.18	.24	.11	.11	.11	.11	.13	.23	.24	.34	.11	.11	.11	.12	.19	.27	.27	.42	.11	.11	.11	.11	.13	.20	.26	.31	.30	.50
		"d"	.16	.11	.16	.11	.16	.11	.17	.11	.18	.11	.18	.11	.18	.11	.17	.11	.18	.11	.18	.11	.18	.11	.17	.11	.17	.11	.18	.11	.18	.11	.18	.11
		"e"	.11	.11	.11	.11	.11	.11	.11	.11	.11	.11	.11	.11	.11	.11	.11	.11	.11	.11	.11	.11	.11	.11	.11	.11	.11	.11	.11	.11	.11	.11	.11	.11
		"f"	.22	.36	.23	.37	.22	.26	.29	.51	.30	.51	.29	.41	.26	.30	.33	.56	.34	.58	.27	.44	.21	.30	.36	.61	.37	.64	.37	.57	.25	.48	.21	.30
* QUANTITY	Conc	CY/LF	.31		.34		.38		.37		.41		.44		.48		.51		.56		.60		.64		.63		.68		.73		.78		.83	
	Reinf	LB/LF	35	41	39	45	45	51	49	58	49	62	54	69	62	78	60	79	64	83	72	93	80	107	72	98	76	102	81	110	92	120	101	143
** SOIL PRESSURE (ksf)			2.3	4.4	2.4	4.5	2.4	4.5	3.1	4.4	3.1	4.5	3.1	4.5	3.2	4.5	2.7	4.5	2.8	4.5	2.8	4.6	2.8	4.6	2.5	4.5	2.5	4.6	2.5	4.6	2.5	4.6	2.6	4.6

SPAN, S			8'										10'												12'													
HEIGHT, H			4'		5'		6'		7'		8'		5'		6'		7'		8'		9'		10'		6'		7'		8'		9'		10'		11'		12'	
MAXIMUM EARTH COVER			10'	20'	10'	20'	10'	20'	10'	20'	10'	20'	10'	20'	10'	20'	10'	20'	10'	20'	10'	20'	10'	20'	10'	20'	10'	20'	10'	20'	10'	20'	10'	20'	10'	20'	10'	20'
CONCRETE (INCH)	ROOF	T_1	8.5"	8.5"	8.5"	8.5"	8.5"	8.5"	8.5"	8.5"	8.5"	8.5"	10"	10"	10"	10"	10"	10"	10"	10"	10"	10"	10"	10"	12"	12"	12"	12"	12"	12"	12"	12"	12"	12"	12"	12"	12"	12"
	SIDE WALL	T_2	8.5"	8.5"	8.5"	8.5"	8.5"	8.5"	8.5"	8.5"	8.5"	8.5"	10"	10"	10"	10"	10"	10"	10"	10"	10"	10"	10"	10"	12"	12"	12"	12"	12"	12"	12"	12"	12"	12"	12"	12"	12"	12"
	INVERT	T_3	8.5"	8.5"	8.5"	8.5"	8.5"	8.5"	8.5"	8.5"	8.5"	8.5"	10"	10"	10"	10"	10"	10"	10"	10"	10"	10"	10"	10"	12"	12"	12"	12"	12"	12"	12"	12"	12"	12"	12"	12"	12"	12"
MINIMUM WELDED WIRE FABRIC ($inch^2/ft$)		"a"	.55	.87	.56	.90	.57	.92	.58	.93	.58	.94	.66	1.07	.67	1.10	.69	1.13	.70	1.14	.70	1.16	.77	1.16	.73	1.21	1.21	1.24	.77	1.27	1.24	1.29	1.27	1.31	.78	1.32	1.29	1.32
		"b"	.37	.59	.35	.55	.33	.52	.33	.52	.36	.57	.45	.74	.43	.70	.41	.67	.40	.64	.43	.67	.48	.67	.51	.85	.85	.81	.49	.77	.81	.74	.77	.77	.53	.79	.74	.79
		"c"	.11	.11	.11	.11	.20	.31	.31	.42	.38	.62	.11	.11	.11	.11	.22	.31	.36	.42	.40	.62	.54	.86	.11	.11	.11	.11	.23	.30	.37	.42	.42	.60	.54	.82	.42	1.06
		"d"	.19	.11	.19	.11	.20	.11	.20	.11	.20	.11	.20	.11	.20	.11	.21	.11	.21	.11	.21	.11	.21	.11	.20	.11	.20	.11	.21	.11	.22	.11	.22	.11	.22	.11	.22	.11
		"e"	.11	.11	.11	.11	.11	.11	.11	.11	.11	.11	.11	.11	.11	.11	.11	.11	.11	.11	.11	.11	.11	.11	.11	.11	.11	.11	.11	.11	.11	.11	.11	.11	.11	.11	.11	.11
		"f"	.44	.76	.45	.79	.37	.61	.27	.52	.20	.31	.55	.96	.56	.99	.47	.81	.34	.73	.31	.53	.16	.30	.62	1.10	1.10	1.13	.64	.97	1.13	.87	.97	.71	.40	.50	.87	.26
* QUANTITY	Conc	CY/LF	.78		.83		.88		.94		.99		1.10		1.17		1.23		1.29		1.35		1.41		1.56		1.63		1.70		1.78		1.85		1.93		2.00	
	Reinf	LB/LF	93	129	97	133	105	148	117	161	131	189	133	191	138	196	148	212	191	225	176	253	201	282	174	255	179	261	191	279	207	293	223	323	249	357	281	393
** SOIL PRESSURE (ksf)			2.5	4.6	2.5	4.6	2.5	4.6	2.5	4.6	2.5	4.6	3.8	4.6	3.8	4.7	3.8	4.7	4.6	4.7	3.9	4.7	3.9	4.8	3.6	4.7	3.7	4.7	3.7	4.8	3.7	4.8	3.7	4.8	3.8	4.9	3.8	4.9

* See Note 3 ** See Note 6

NOTES:

1. The inside and outside surfaces of the RCB roof shall be marked "TOP".
2. H1 minimum shall equal the wall thickness. H1 maximum shall be 8" for spans through 8' and 14" for spans over 8'.
3. Quantities are approximate and for design purposes only.
4. For design and details not shown see Revised Standard Plan RSP D83B.
5. For external sealing band applications see Standard Plan A62G.
6. Soil pressures shown are factored per AASHTO LRFD and include soil weight of fill over box, self weight of box and live load where applicable.

STATE OF CALIFORNIA
DEPARTMENT OF TRANSPORTATION

PRECAST REINFORCED CONCRETE BOX CULVERT

NO SCALE

RSP D83A DATED JULY 18, 2014 SUPERSEDES STANDARD PLAN D83A DATED MAY 20, 2011 - PAGE 175 OF THE STANDARD PLANS BOOK DATED 2010.

REVISED STANDARD PLAN RSP D83A

2010 REVISED STANDARD PLAN RSP D83A

DATE PLOTTED => 25-AUG-2014
TIME PLOTTED => 09:28

Dist	COUNTY	ROUTE	POST MILES TOTAL PROJECT	SHEET No.	TOTAL SHEETS
02	Sha	299	0.3/7.1	394	401

REGISTERED CIVIL ENGINEER

July 18, 2014
PLANS APPROVAL DATE

REGISTERED PROFESSIONAL ENGINEER
Carl M. Duan
No. C59976
Exp. 6-30-16
CIVIL
STATE OF CALIFORNIA

THE STATE OF CALIFORNIA OR ITS OFFICERS OR AGENTS SHALL NOT BE RESPONSIBLE FOR THE ACCURACY OR COMPLETENESS OF SCANNED COPIES OF THIS PLAN SHEET.

TO ACCOMPANY PLANS DATED 06-09-14

DESIGN NOTES:

Specifications:

AASHTO LRFD Bridge Design Specifications, 4th Edition with California Amendments.

Earth load:

Earth pressures for two conditions:
140 pcf Vert, 42 pcf Horiz
140 pcf Vert, 140 pcf Horiz

Unit stresses:

f'c = 5.0 ksi
fy = 65.0 ksi for weld wire fabric
n = 7

Shear:

Based on

$V_c = \{2.14\sqrt{f'_c} + 4600 \frac{A_s}{bd_e} \frac{V_u d_e}{M_u}\} b.d_e \leq 4.0\sqrt{f'_c} b.d_e$ (Pounds)

V_c shall not be less than $3.00\sqrt{f'_c} b.d_e$ for frame members and $2.5\sqrt{f'_c} b.d_e$ for simply supported members.

Exclusion:

Axial loading on the members has not been considered.

GENERAL NOTES:

Designation:

Standard single or multiple precast box culverts are shown on the plans as span times height with maximum cover over roof thus: 8' x 5' RCB with 10'-0" or double 10' x 5' RCB with 20'-0", followed by alternatives.

Alternatives:

Single cell:

Standard dimensions of AASHTO Material Specification 'M259' or 'M273'.

Multiple cell:

Constructed by placing single cells adjacent to each other. Inlet and outlet ends of culvert will be rounded unless square ends are designated. Parapet will be shown unless designated in plans. Such designation may be different for inlet and outlet ends.

Limitations:

Where the overfill is less than 12", Precast RCB culverts are not to be used. Precast RCB culverts are not to be used in siphon or pressurized installations unless appropriate "watertight" jointing is provided.

Special reinforcement coverage:

Precast RCB culvert standard plans are not to be used in a corrosive environment or where there is a severe abrasive flow condition or freeze-thaw locations.

Special design:

Required for culvert with different conditions, loads or design bearing pressures greater than those given on these plans. Required for culverts where end details need higher skew angles, higher parapets or barrier sections.

CONSTRUCTION NOTES:

Cutoff walls:

4'-0" Cutoff walls are to be provided at inlet and/or outlet unless channel is lined and unless otherwise shown. These walls are to be extended if scour conditions warrant. See Standard Plans D84, D85 and D86A.

Wingwalls:

Wingwalls shall be cast-in-place and shall conform to standard plan details for box culvert wingwalls. See Standard Plans D84, D85 and D86A.

Earthwork:

See Standard Plan A62G.

Construction loads:

Strutting may be required near temporary ends. For construction loads on culverts, See Standard Plan D88.

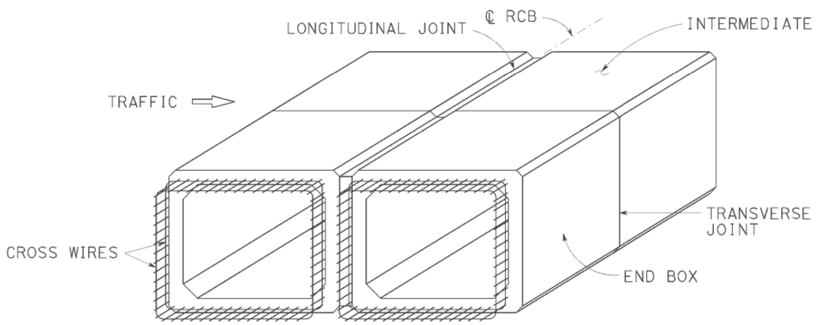

PRECAST RCB TERMINOLOGY

NOTE: Inner and outer reinforcement to be exposed as required to tie to cast-in-place construction. A minimum of two cross wires shall be exposed on all sides.

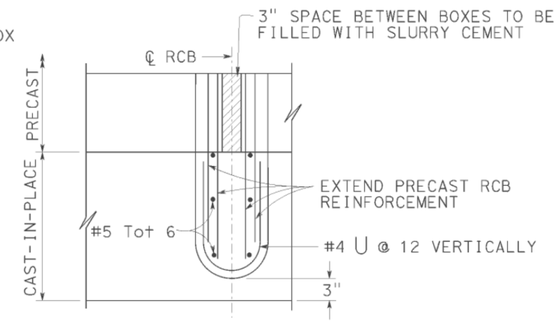

PARTIAL PLAN INTERIOR WALL MULTICELL CULVERT

PARAPET "P" BARS			
SPAN \ SKEW ANGLE	0° TO 15°	16° TO 30°	31° TO 45°
4'-0"	#5	#5	#5
5'-0"	#5	#5	#6
6'-0"	#6	#6	#6
7'-0"	#7	#7	#7
8'-0"	#7	#7	#8
10'-0"	#8	#8	#9
12'-0"	#9	#9	#10

BARRIER PARAPET REINFORCEMENT

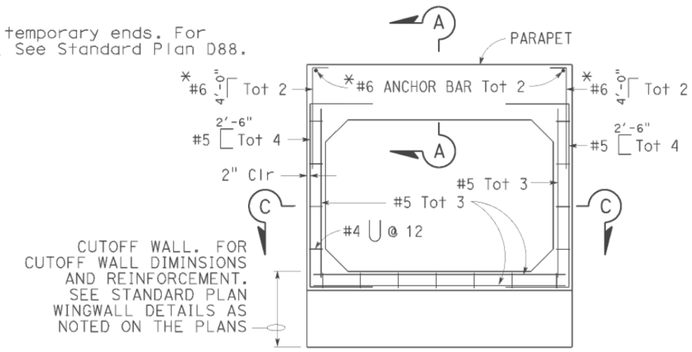

CAST-IN-PLACE END ELEVATION

* Reinforcing required for barrier parapet application only.

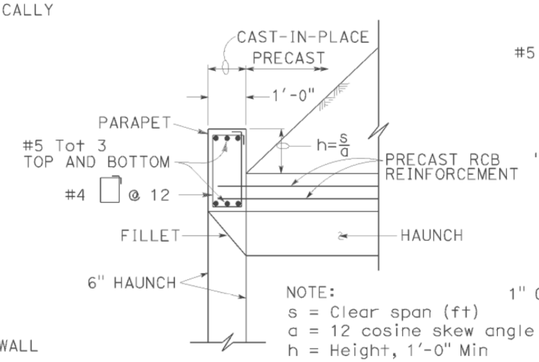

NOTE:
s = Clear span (ft)
a = 12 cosine skew angle
h = Height, 1'-0" Min

SECTION A-A
(Standard Height Parapet)

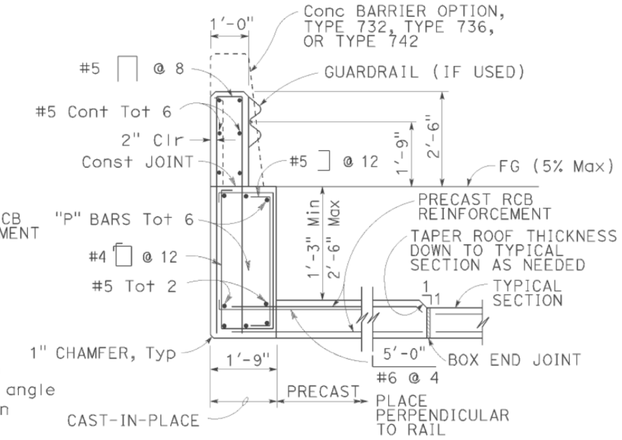

SECTION A-A
(Barrier Parapet)

TYPICAL CULVERT END DETAILS

For wall and invert reinforcement not shown, See "End Elevation" detail.

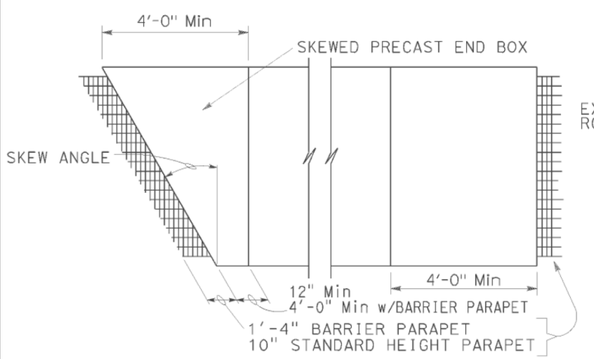

PARTIAL PLAN VIEW

For illustrative purposes only.
For correct skew direction see plans.

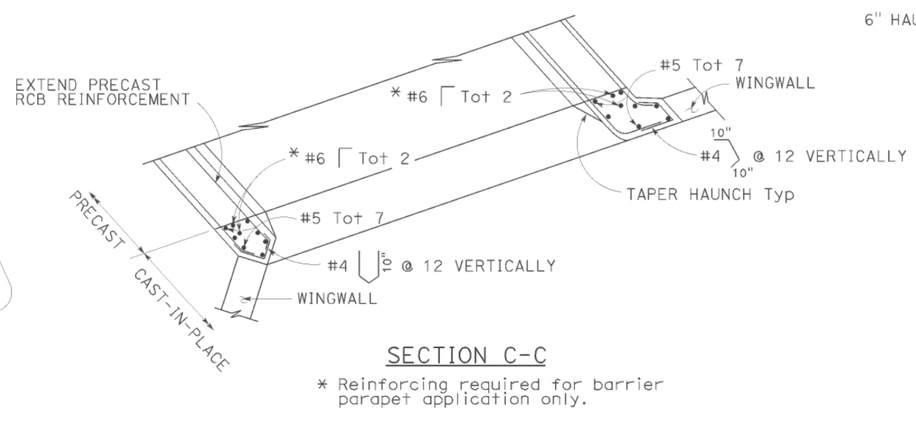

SECTION C-C

* Reinforcing required for barrier parapet application only.

STATE OF CALIFORNIA
DEPARTMENT OF TRANSPORTATION

PRECAST REINFORCED CONCRETE BOX CULVERT MISCELLANEOUS DETAILS

NO SCALE

RSP D83B DATED JULY 18, 2014 SUPERSEDES STANDARD PLAN D83B DATED MAY 20, 2011 - PAGE 176 OF THE STANDARD PLANS BOOK DATED 2010.

REVISED STANDARD PLAN RSP D83B

2010 REVISED STANDARD PLAN RSP D83B

DATE PLOTTED => 25-AUG-2014
TIME PLOTTED => 09:28

DIST	COUNTY	ROUTE	POST MILES TOTAL PROJECT	SHEET No.	TOTAL SHEETS
02	Sha	299	0.3/7.1	395	401

REGISTERED CIVIL ENGINEER 04-04-14 DATE

06-09-14
PLANS APPROVAL DATE

REGISTERED PROFESSIONAL ENGINEER Grant Schuster No. C63897 Exp. 09-31-2014 CIVIL STATE OF CALIFORNIA

The State of California or its officers or agents shall not be responsible for the accuracy or completeness of scanned copies of this plan sheet.

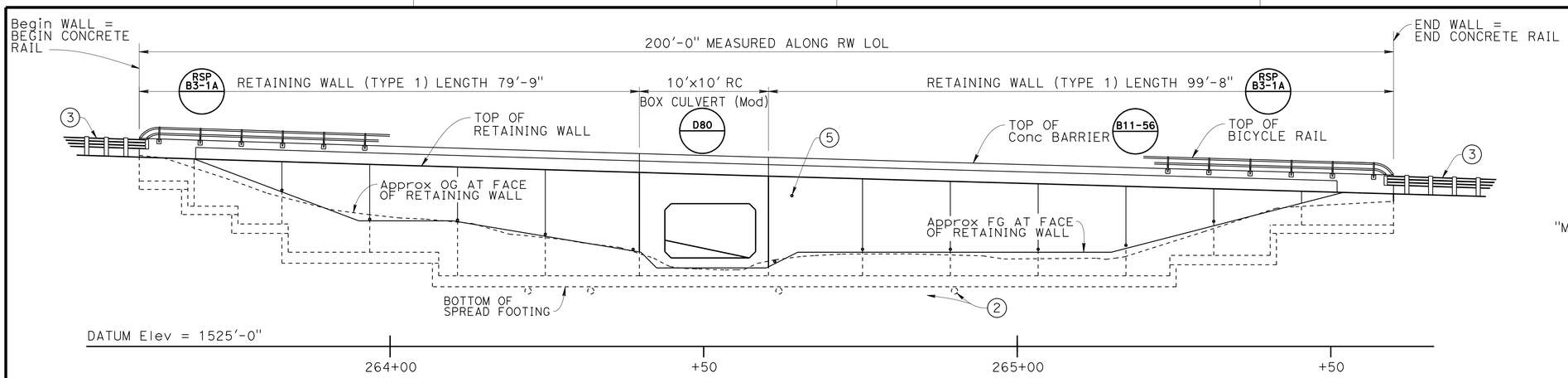

ELEVATION

1" = 10'-0"

QUANTITIES

REMOVE REINFORCED CONCRETE BOX CULVERT (LS)(PORTION)	LUMP	SUM
CLEANING, INSPECTING, AND PREPARING CULVERT (LF)	49	LF
CONCRETE INVERT PAVING	15	CY
STRUCTURE EXCAVATION (RETAINING WALL)	605	CY
STRUCTURE BACKFILL (RETAINING WALL)	835	CY
STRUCTURAL CONCRETE, RETAINING WALL	171	CY
STRUCTURAL CONCRETE, BOX CULVERT	65	CY
BAR REINFORCING STEEL (RETAINING WALL)	58,300	LB
BAR REINFORCING STEEL (BOX CULVERT)	19,400	LB
ROCK SLOPE PROTECTION (NO. 2, METHOD B) (CY)	16	CY
TUBULAR BICYCLE RAILING	200	LF
CONCRETE BARRIER (TYPE 736A MODIFIED)	200	LF

NOTES:

1. For location and details see "Roadway Plans"
2. Rock drains for location see "Structure Plan" sheet
3. MGS see "Roadway Plans"
4. Reconstruct private drive see "Roadway Plans"
5. Conduit see "Roadway Plans"
6. Clean out existing culvert and increase elevation of invert 1.2' and varies
7. Epoxy coated Reinf required see plan sheets for locations
8. Concrete Barrier (Type 736A MODIFIED)

-·-·- Indicates existing culvert

Indicates partial culvert removal

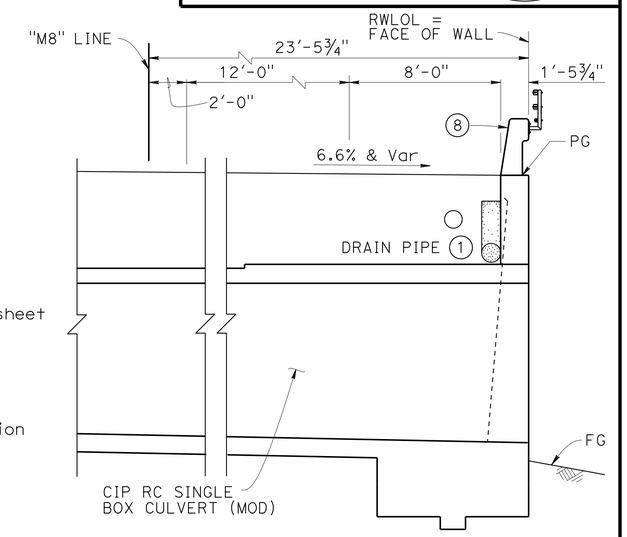

AT CULVERT

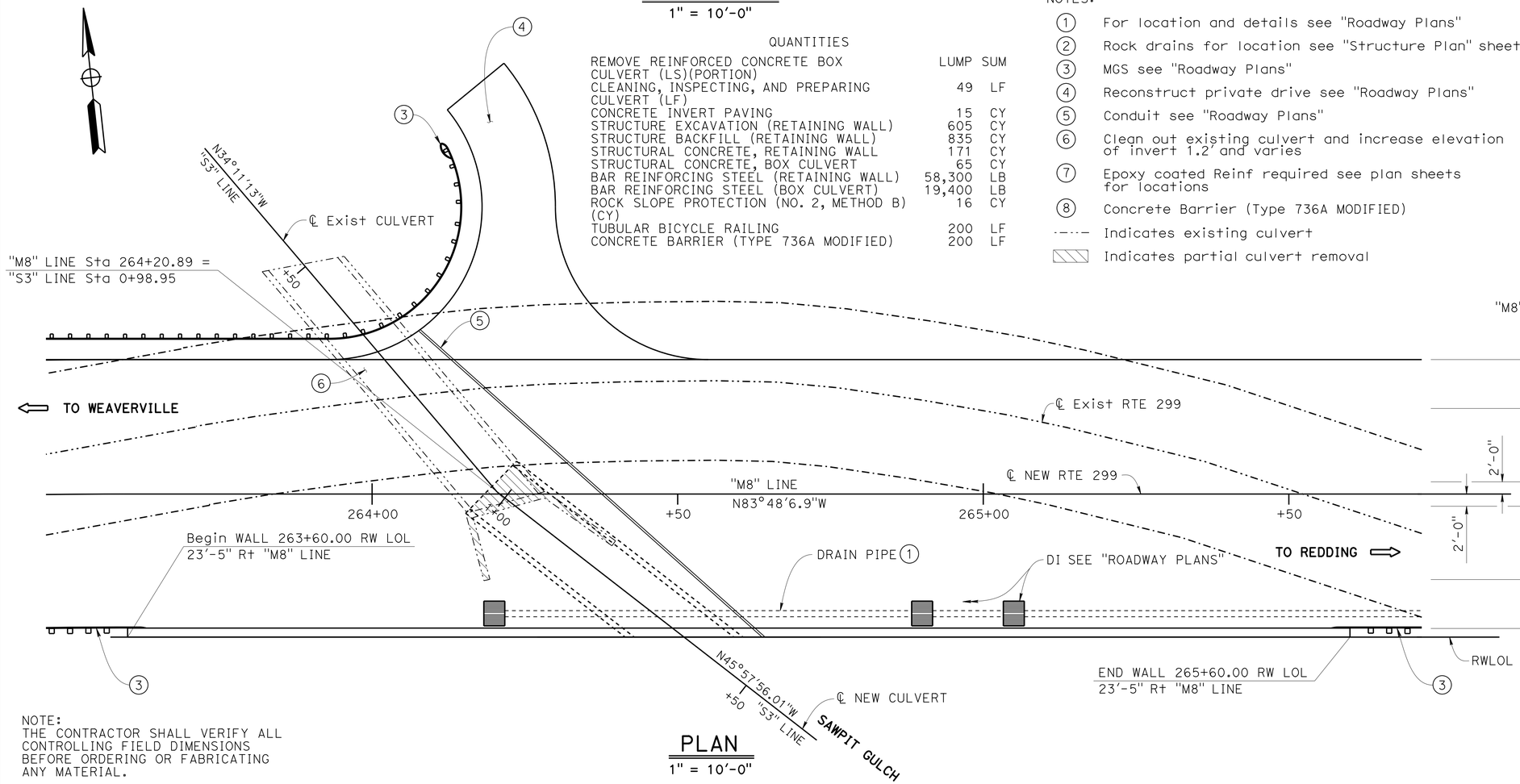

NOTE:
THE CONTRACTOR SHALL VERIFY ALL CONTROLLING FIELD DIMENSIONS BEFORE ORDERING OR FABRICATING ANY MATERIAL.

PLAN

1" = 10'-0"

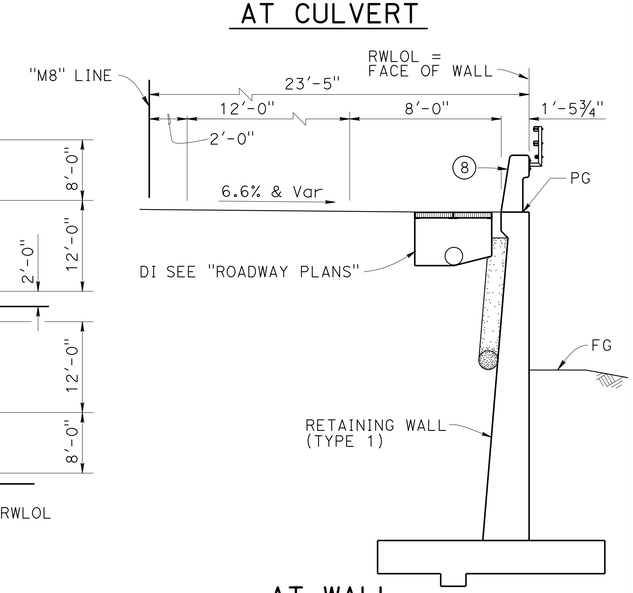

AT WALL TYPICAL SECTION

¼" = 1'-0"

DESIGN	BY G. Schuster	CHECKED M. Akkari	LOAD & RESISTANCE FACTOR DESIGN	LIVE LOADING: HL93 W/"LOW-BOY": PERMIT DESIGN VEHICLE	
DETAILS	BY J. Yang	CHECKED M. Akkari	LAYOUT	BY G. Schuster	CHECKED M. Akkari
QUANTITIES	BY H. Fang	CHECKED G. Schuster	SPECIFICATIONS	BY S. Hansen	PLANS AND SPECS COMPARED S. Hansen

DESIGN ENGINEER

ORIGINAL SCALE IN INCHES FOR REDUCED PLANS 0 1 2 3

STATE OF CALIFORNIA DEPARTMENT OF TRANSPORTATION

DIVISION OF ENGINEERING SERVICES STRUCTURE DESIGN DESIGN BRANCH 2

BRIDGE NO.

POST MILE 6.2

SAWPIT GULCH CULVERT AND WALL
GENERAL PLAN

UNIT: 3577
PROJECT NUMBER & PHASE: 0200020042 1
CONTRACT NO.: 02-3E4101

DISREGARD PRINTS BEARING EARLIER REVISION DATES

REVISION DATES 01-24-13 11-07-13 02-26-14 03-26-14

SHEET 1 OF 7

USERNAME => s115152 DATE PLOTTED => 25-AUG-2014 TIME PLOTTED => 08:27

STRUCTURES DESIGN GENERAL PLAN SHEET (ENGLISH) (REV.09-01-10)

FILE => a-gp01.dgn

DIST	COUNTY	ROUTE	POST MILES TOTAL PROJECT	SHEET No.	TOTAL SHEETS
02	Sha	299	0.3/7.1	396	401

REGISTERED CIVIL ENGINEER 04-04-14 DATE

06-09-14
PLANS APPROVAL DATE

REGISTERED PROFESSIONAL ENGINEER Grant Schuster No. C63897 Exp. 09-31-2014 CIVIL STATE OF CALIFORNIA

The State of California or its officers or agents shall not be responsible for the accuracy or completeness of scanned copies of this plan sheet.

NOTES:

1. For design notes, see RSP B3-1A, B11-56, D80, D82, & D84.
2. No. 2 RSP place in front of rock drains see "Structural Details" sheet.
3. Utility opening see "Structural Details" sheet.
4. For concrete barrier details see B11-56.
5. ℄ weep hole 1'-0" from end of culvert.
6. For Section A-A, B-B, & rock drain details see "Structure Details" sheet
7. For expansion joint locations in tubular bicycle railings see "Concrete Barrier Type 736 Tubular Bicycle Railing Details" sheet

LEGEND:

* Length of wall segments maybe changed by contractor if: 1. Approved by engineer 2. Total length of wall remains @ 200'-0"

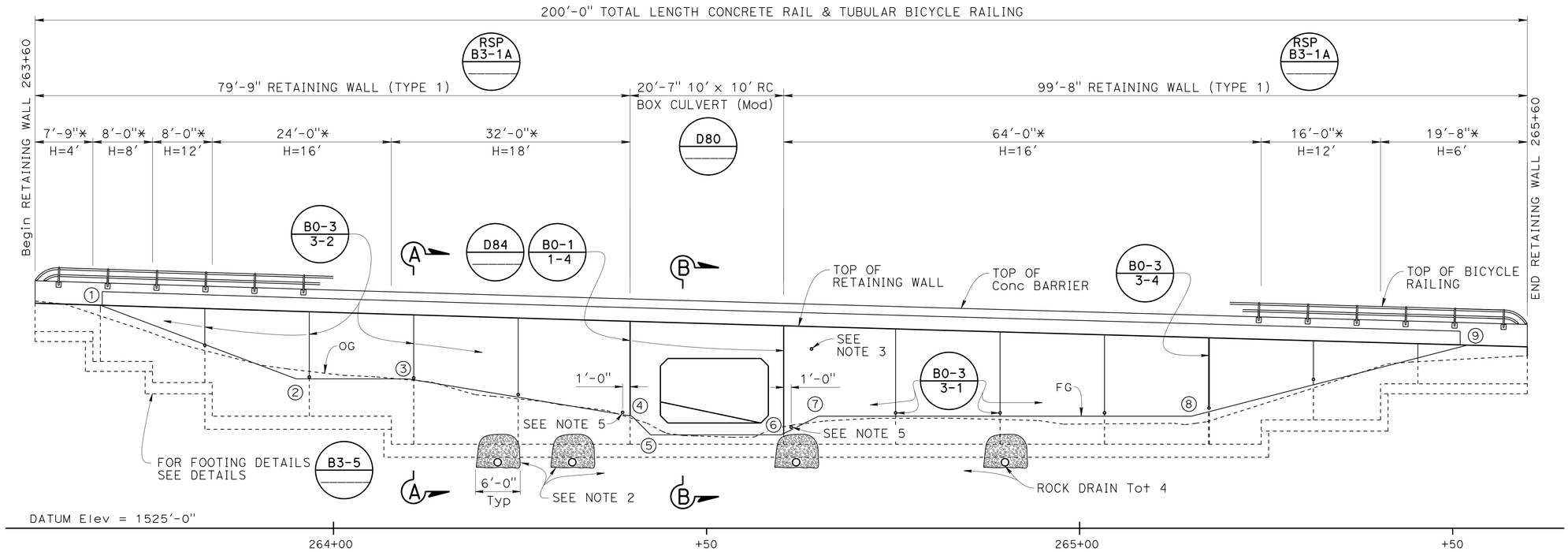

ELEVATION

1/8" = 1'-0"

INDEX TO PLANS

SHEET No.	TITLE
1	GENERAL PLAN
2	STRUCTURE PLAN
3	STRUCTURE DETAILS
4	FOUNDATION PLAN
5	FOOTING PLAN
6	EXCAVATION AND BACKFILL DETAILS
7	CONCRETE BARRIER TYPE 736 TUBULAR BICYCLE RAILING DETAILS

STANDARD PLANS DATED 2010

B0-1	BRDIGE DETAILS
B0-3	BRIDGE DETAILS
RSP B3-1A	RETAINING WALL TYPE 1 (CASE 1)
RSP B3-5	RETAINING WALL DETAILS NO. 1
B3-6	RETAINING WALL DETAILS NO. 2
B11-55	CONCRETE BARRIER TYPE 732
B11-56	CONCRETE BARRIER TYPE 736
D80	CAST-IN-PLACE REINFORCED CONCRETE SINGLE BOX CULVERT
D82	CAST-IN-PLACE REINFORCED CONCRETE BOX CULVERT MISCELLANEOUS DETAILS
D84	BOX CULVERT WINGWALLS TYPES A, B, AND C

STANDARD PLAN SHEET No.

DETAIL No.

ROCK DRAIN LOCATION

NO.	STATION
1	264+22.00
2	264+32.00
3	264+62.00
4	264+90.00

FG PROFILE AT FACE OF WALL

POINT	STATION (FT)	FG Elev (FT)
①	263+68	TOP OF WALL
②	263+95	1545.00
③	264+10	1545.00
④	264+40	1540.00
⑤	264+42.5	1537.5
⑥	264+60	1537.5
⑦	265+65	1540.00
⑧	265+15	1540.00
⑨	265+52	TOP OF WALL

ELEVATION @ PG

STATION (FT)	Elev (FT)
263+60	1555.14
263+80	1554.51
264+00	1553.89
264+20	1553.29
264+40	1552.7
264+60	1552.12
264+80	1551.55
265+00	1550.99
265+20	1550.42
265+40	1549.86
265+60	1549.29

	BY	CHECKED
DESIGN	G. Schuster	M. Akkari
DETAILS	J. Yang	M. Akkari
QUANTITIES	H. Fang	G. Schuster

STATE OF CALIFORNIA
DEPARTMENT OF TRANSPORTATION

DIVISION OF ENGINEERING SERVICES
STRUCTURE DESIGN
DESIGN BRANCH 2

BRIDGE NO.
POST MILE 6.2

SAWPIT GULCH CULVERT AND WALL
STRUCTURE PLAN

STRUCTURES DESIGN DETAIL SHEET (ENGLISH) (REV. 09-01-10)

ORIGINAL SCALE IN INCHES FOR REDUCED PLANS 0 1 2 3

UNIT: 3577
PROJECT NUMBER & PHASE: 0200020042 1
CONTRACT NO.: 02-3E4101

DISREGARD PRINTS BEARING EARLIER REVISION DATES

REVISION DATES 05-30-13 11-01-13 03-26-14

SHEET 2 OF 7

FILE => c-sp01.dgn

USERNAME => s115152 DATE PLOTTED => 25-AUG-2014 TIME PLOTTED => 08:27

DIST	COUNTY	ROUTE	POST MILES TOTAL PROJECT	SHEET No.	TOTAL SHEETS
02	Sha	299	0.3/7.1	397	401

REGISTERED CIVIL ENGINEER 04-04-14 DATE

06-09-14
PLANS APPROVAL DATE

REGISTERED PROFESSIONAL ENGINEER Grant Schuster No. C63897 Exp. 09-31-2014 CIVIL STATE OF CALIFORNIA

The State of California or its officers or agents shall not be responsible for the accuracy or completeness of scanned copies of this plan sheet.

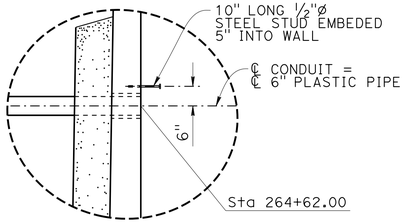

For utility open details see B3-6

DETAIL A

NO SCALE

NOTES:

1. Footing key dimension shown is non-standard
2. For d see "Road Plans"
3. For location of Section A-A & B-B see "Structure Plan" sheet
4. For Retaining wall and retaining wall footing reinforcement see RSP B3-1A

LEGEND:

1. 3"* perforated plastic pipe
2. Fold fabric over ends of pipe to close off
3. 3"* plastic pipe set in 4" trench excavated into bedrock
4. Class 8 RSP fabric
5. Conduit (6"* plastic pipe) extend into utility opening, for location see "Roadway Plans"
6. Do not place weep hole in parapet wall

Reinforcing bars in this region must be expoxy coated. If portion of a bar is in this region then the entire bar must be expoxy coated.

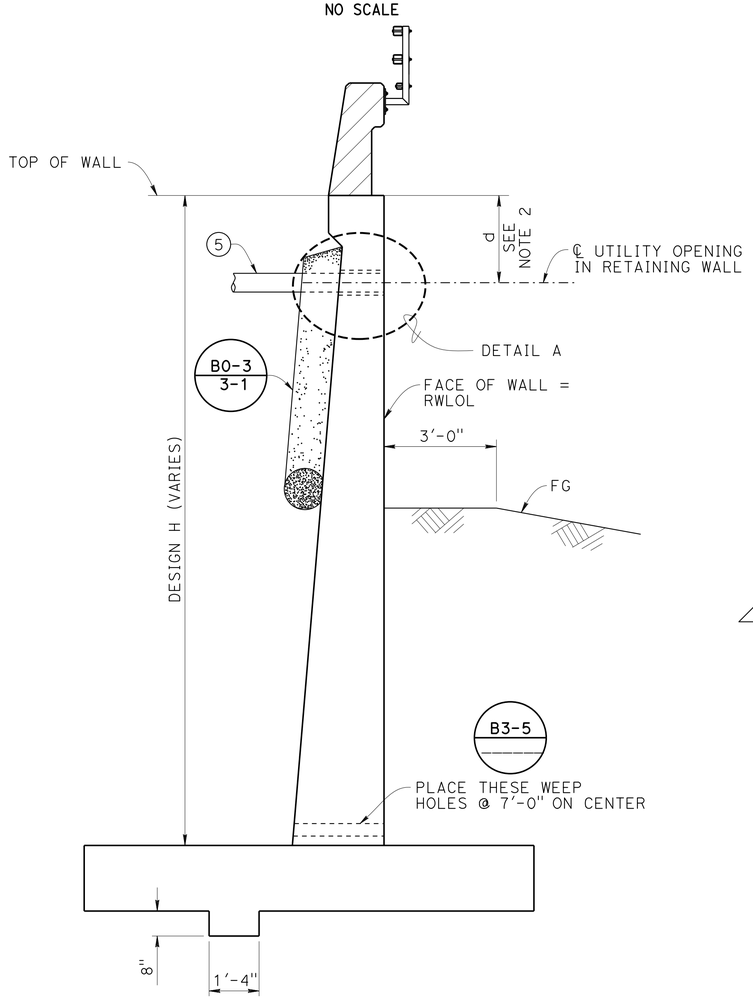

SECTION A-A

1/2" = 1'-0"

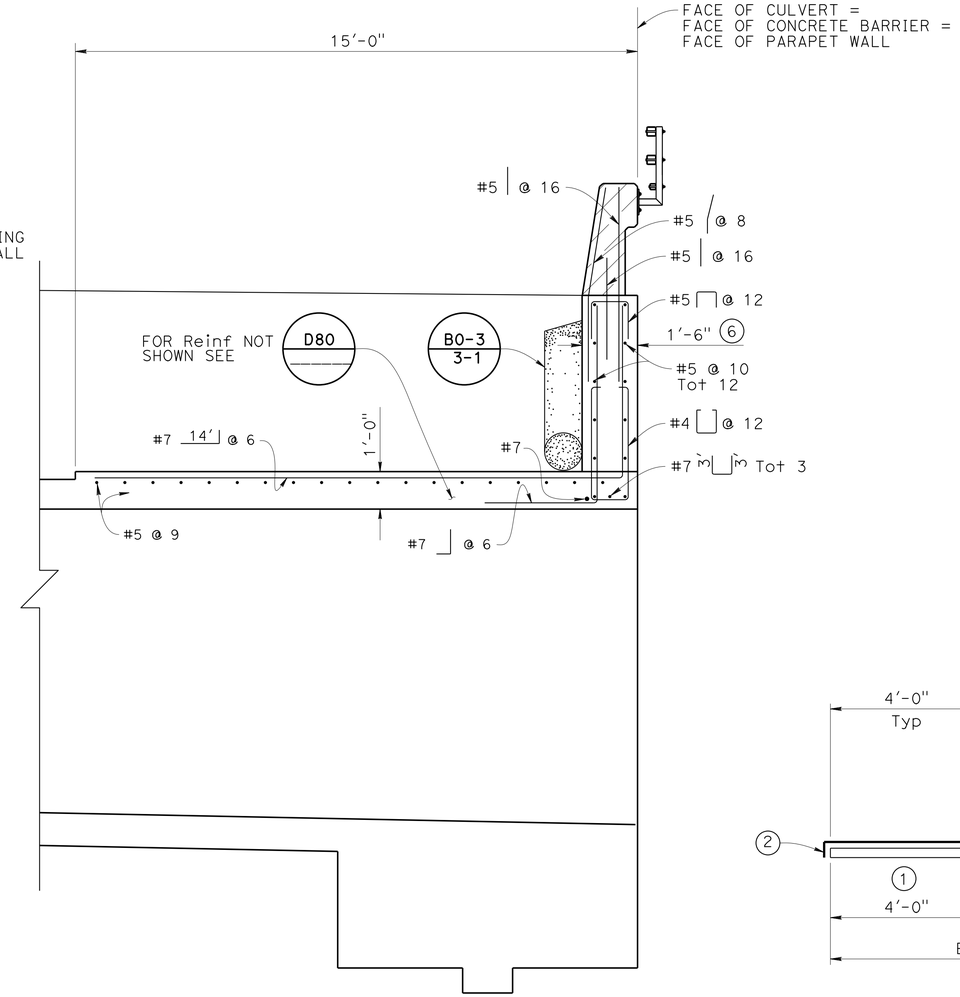

SECTION B-B

1/2" = 1'-0"

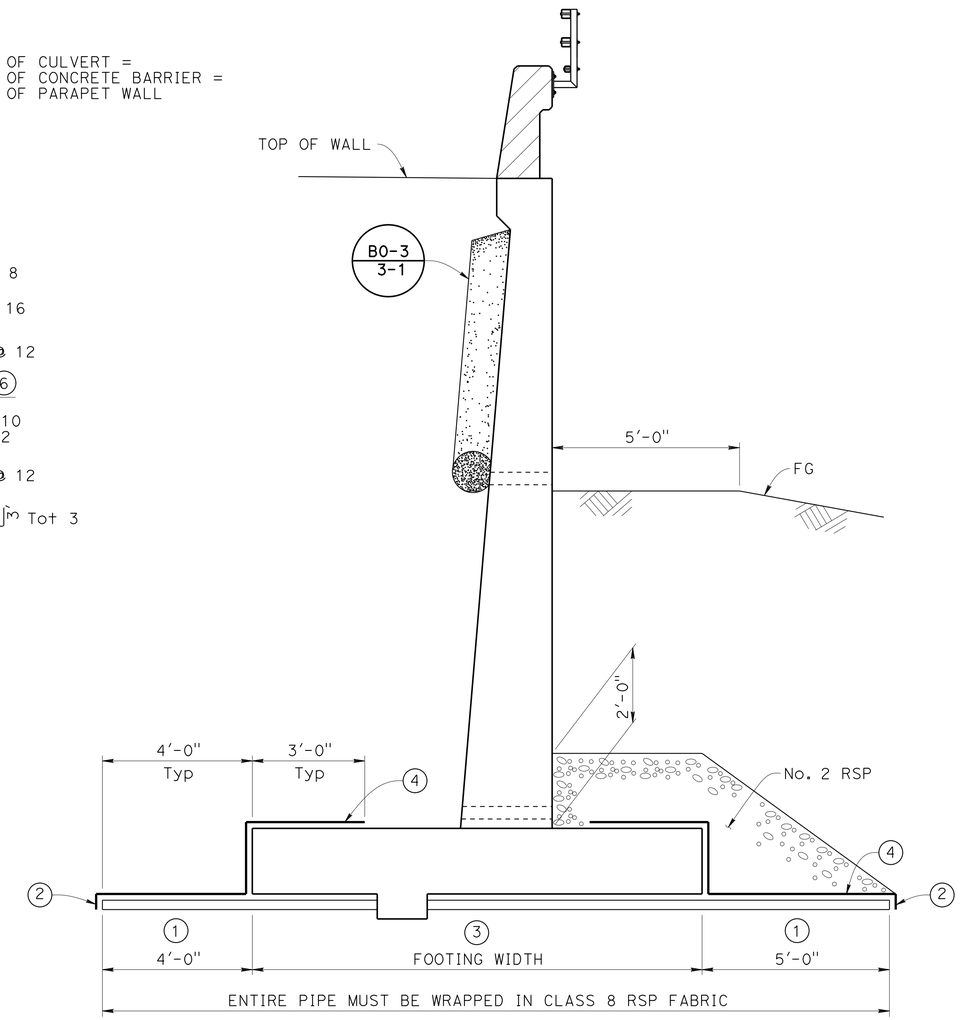

ROCK DRAIN DETAILS

1/2" = 1'-0"

	BY	CHECKED
DESIGN	G. Schuster	M. Akkari
DETAILS	J. Yang	M. Akkari
QUANTITIES	H. Fang	G. Schuster

STATE OF CALIFORNIA DEPARTMENT OF TRANSPORTATION

DIVISION OF ENGINEERING SERVICES STRUCTURE DESIGN DESIGN BRANCH 2

BRIDGE NO.

POST MILE 6.2

SAWPIT GULCH CULVERT AND WALL
STRUCTURE DETAILS

STRUCTURES DESIGN DETAIL SHEET (ENGLISH) (REV. 09-01-10)

ORIGINAL SCALE IN INCHES FOR REDUCED PLANS 0 1 2 3

UNIT: 3577
PROJECT NUMBER & PHASE: 0200020042 1
CONTRACT NO.: 02-3E4101

DISREGARD PRINTS BEARING EARLIER REVISION DATES

REVISION DATES 02-20-13 11-07-13 03-26-14

SHEET 3 OF 7

FILE => c-spd01.dgn

USERNAME => s115152 DATE PLOTTED => 25-AUG-2014 TIME PLOTTED => 08:27

DIST	COUNTY	ROUTE	POST MILES TOTAL PROJECT	SHEET No.	TOTAL SHEETS
02	Sha	299	0.3/7.1	398	401

REGISTERED CIVIL ENGINEER 04-04-14 DATE

06-09-14
PLANS APPROVAL DATE

REGISTERED PROFESSIONAL ENGINEER Grant Schuster No. C63897 Exp. 09-31-2014 CIVIL STATE OF CALIFORNIA

The State of California or its officers or agents shall not be responsible for the accuracy or completeness of electronic copies of this plan sheet.

CURVE DATA

No.	R	Δ	T	L
Ⓐ	1000.00	10°17'33"	90.06	179.64
Ⓑ	550.00	36°13'18"	179.88	347.70

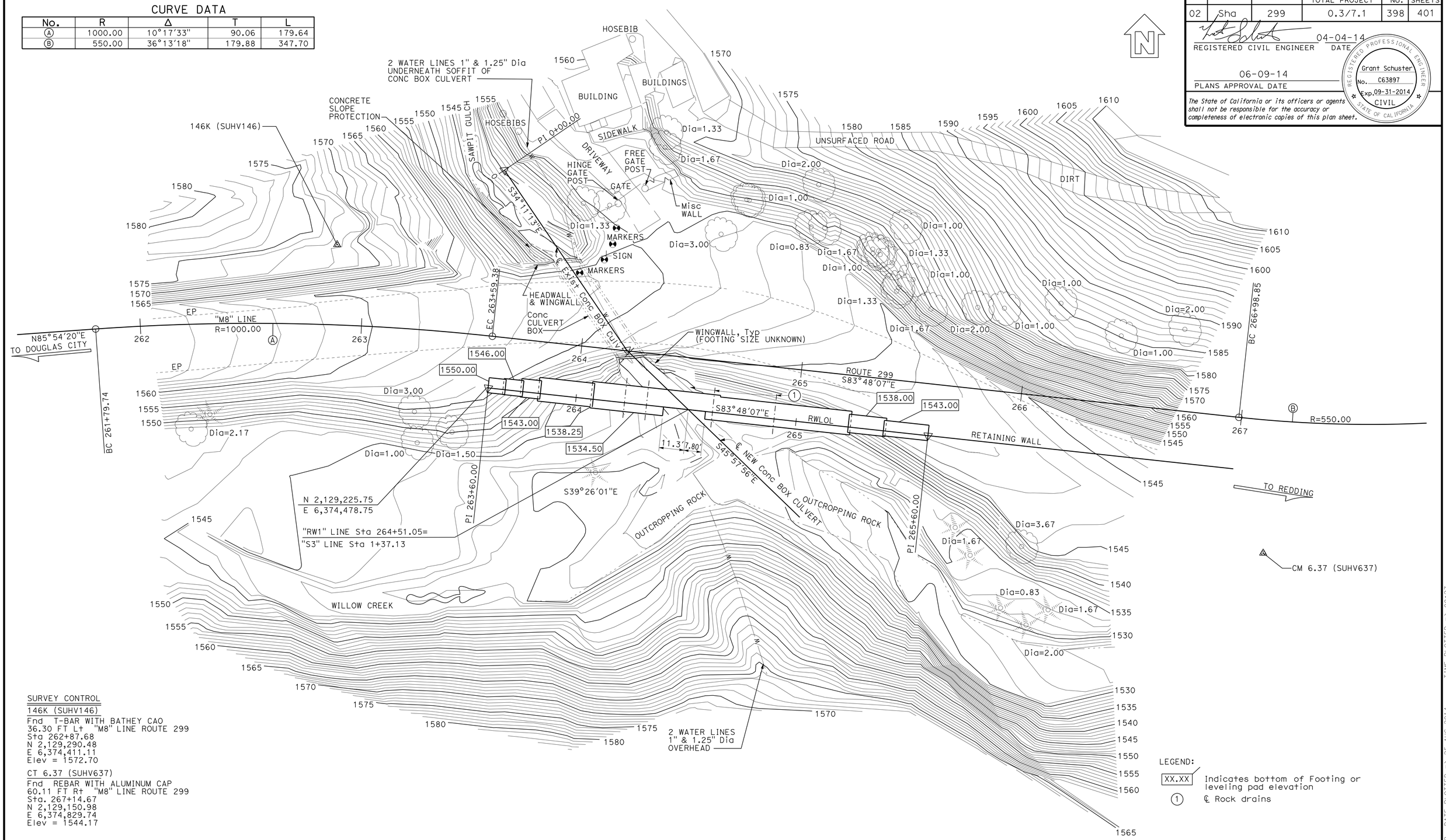

SURVEY CONTROL

146K (SUHV146)
Fnd T-BAR WITH BATHEY CAO
36.30 FT Lt "M8" LINE ROUTE 299
Sta 262+87.68
N 2,129,290.48
E 6,374,411.11
Elev = 1572.70

CT 6.37 (SUHV637)
Fnd REBAR WITH ALUMINUM CAP
60.11 FT Rt "M8" LINE ROUTE 299
Sta. 267+14.67
N 2,129,150.98
E 6,374,829.74
Elev = 1544.17

LEGEND:

XX.XX — Indicates bottom of Footing or leveling pad elevation

(1) — ℄ Rock drains

PRELIMINARY INVESTIGATION SECTION

SCALE 1"=20'	VERT.DATUM NAVD88	PHOTOGRAMMETRY AS OF: X			
	HORZ.DATUM NAD83(92)(1991.35)	SURVEYED	BY DISTRICT	CHECKED	BY D. IVY 05/2013
	ALIGNMENT TIES Dist TRAVERSE SHEET	DRAFTED	BY T. ZOLNIKOV 05/2013	CHECKED	BY S. SOU 05/2013

DESIGN	BY G. Schuster	CHECKED M. Akkari
DETAILS	BY J. Yang	CHECKED M. Akkari
QUANTITIES	BY H. Fang	CHECKED G. Schuster

STATE OF CALIFORNIA
DEPARTMENT OF TRANSPORTATION

DIVISION OF ENGINEERING SERVICES
STRUCTURE DESIGN
DESIGN BRANCH 2

BRIDGE NO.
POST MILE 6.2

SAWPIT GULCH CULVERT AND WALL
FOUNDATION PLAN

STRUCTURES FOUNDATION PLAN SHEET (ENGLISH) (REV. 09-01-10)

ORIGINAL SCALE IN INCHES FOR REDUCED PLANS 0 1 2 3

UNIT: 3646
PROJECT NUMBER & PHASE: 0200020042 1
CONTRACT NO.: 02-3E4101

DISREGARD PRINTS BEARING EARLIER REVISION DATES

REVISION DATES 05/24/13 09/10/13 09/13/13 03-26-14

SHEET 4 OF 7

FILE => e-fp01.dgn

USERNAME => s115152 DATE PLOTTED => 25-AUG-2014 TIME PLOTTED => 08:27

DIST	COUNTY	ROUTE	POST MILES TOTAL PROJECT	SHEET No.	TOTAL SHEETS
02	Sha	299	0.3/7.1	399	401

REGISTERED CIVIL ENGINEER 04-04-14 DATE

06-09-14
PLANS APPROVAL DATE

REGISTERED PROFESSIONAL ENGINEER Grant Schuster No. C63897 Exp. 09-31-2014 CIVIL STATE OF CALIFORNIA

The State of California or its officers or agents shall not be responsible for the accuracy or completeness of scanned copies of this plan sheet.

LEGEND:

- (A) Clean and roughen existing culvert invert
- (B) Construct invert on top of footing
- (C) Existing culvert wingwalls
- Indicates existing culvert
- Indicates culvert paving place on invert of existing culvert

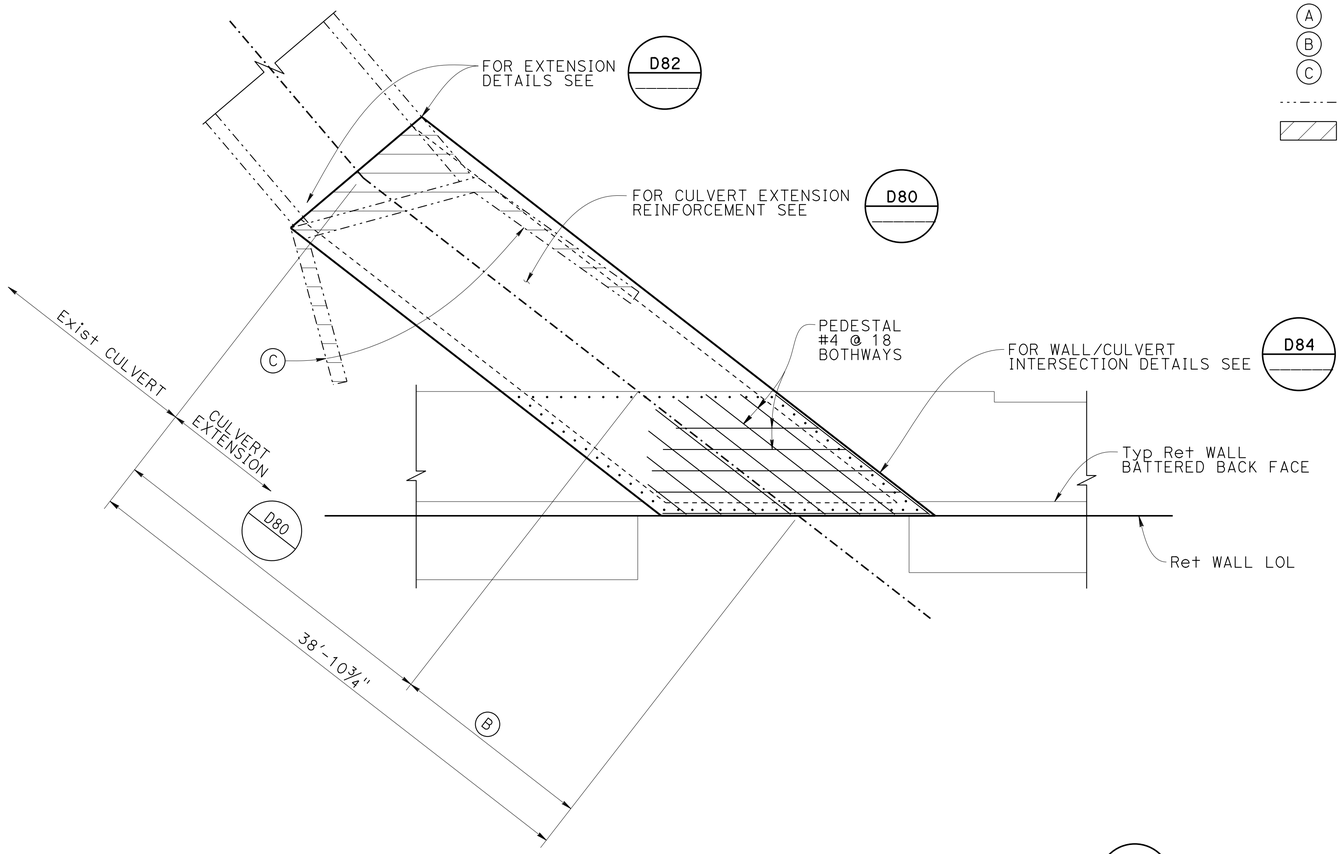

CULVERT EXTENSION INVERT PLAN

3/16" = 1'-0"

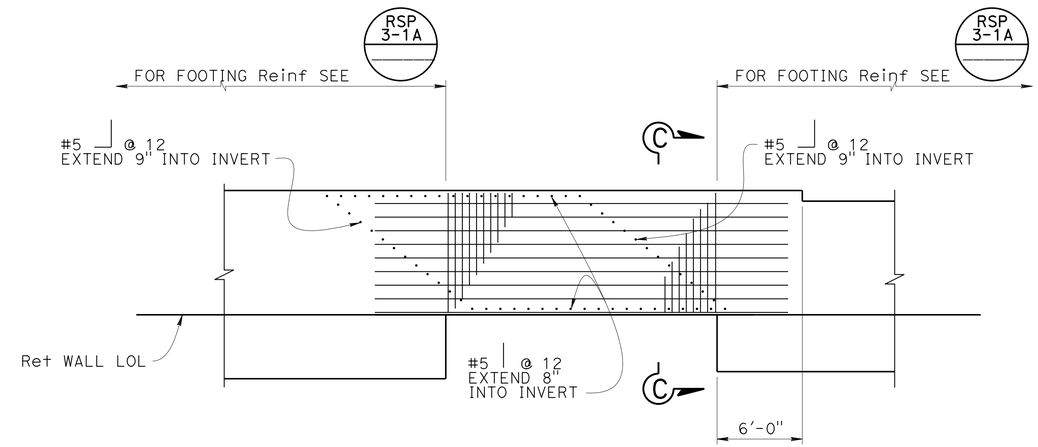

FOOTING PLAN

3/16" = 1'-0"

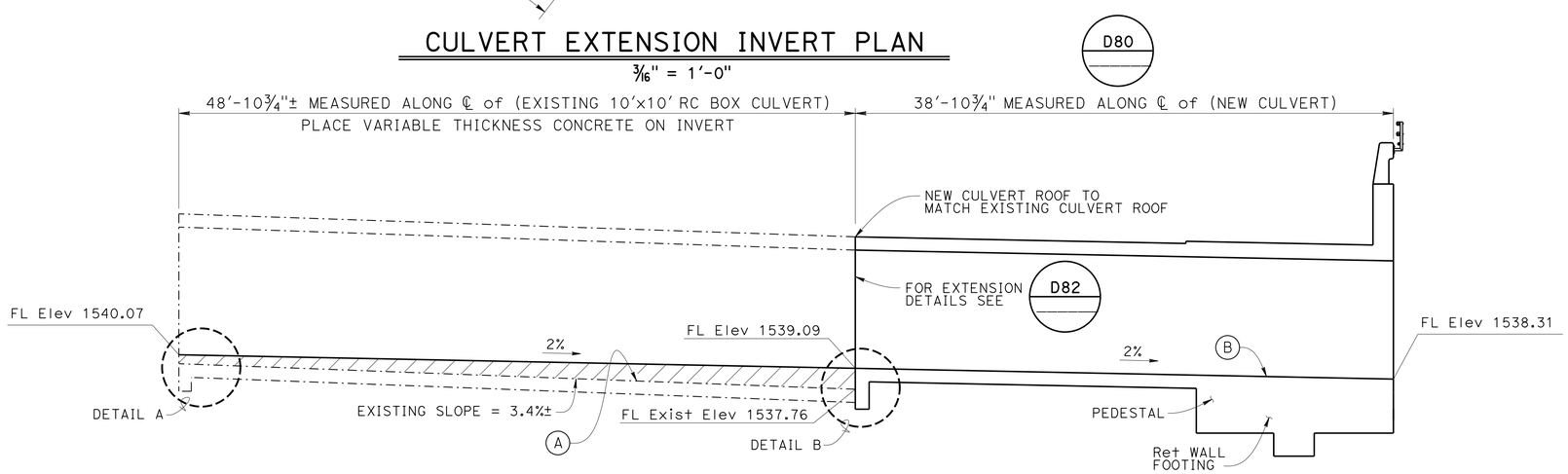

EXISTING & NEW CULVERT ELEVATION

3/16" = 1'-0"

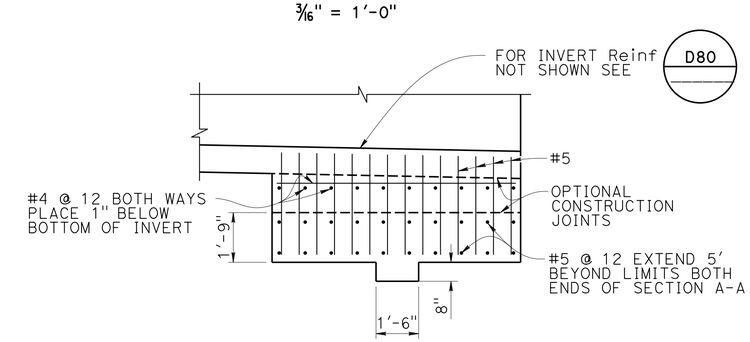

SECTION C-C

3/8" = 1'-0"

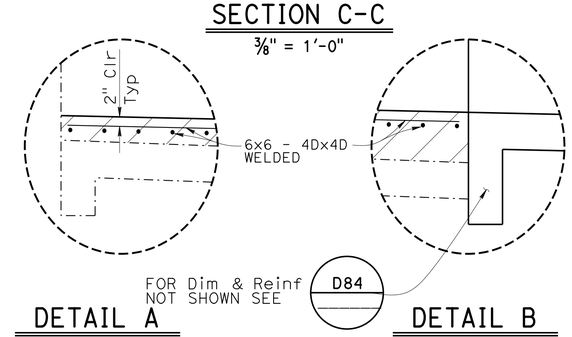

DETAIL A

NO SCALE

DETAIL B

NO SCALE

DESIGN	BY G. Schuster	CHECKED M. Akkari	
DETAILS	BY J. Yang	CHECKED M. Akkari	
QUANTITIES	BY H. Fang	CHECKED G. Schuster	

STATE OF CALIFORNIA
DEPARTMENT OF TRANSPORTATION

DIVISION OF ENGINEERING SERVICES
STRUCTURE DESIGN
DESIGN BRANCH 2

BRIDGE NO.
POST MILE 6.2

SAWPIT GULCH CULVERT AND WALL
FOOTING PLAN

STRUCTURES DESIGN DETAIL SHEET (ENGLISH) (REV. 09-01-10)

ORIGINAL SCALE IN INCHES FOR REDUCED PLANS 0 1 2 3

UNIT: 3577
PROJECT NUMBER & PHASE: 0200020042 1
CONTRACT NO.: 02-3E4101

DISREGARD PRINTS BEARING EARLIER REVISION DATES

REVISION DATES 05-20-13 11-06-13 03-26-14

SHEET 5 OF 7

FILE => f-fop.dgn

USERNAME => s115152 DATE PLOTTED => 25-AUG-2014 TIME PLOTTED => 08:27

DIST	COUNTY	ROUTE	POST MILES TOTAL PROJECT	SHEET No.	TOTAL SHEETS
02	Sha	299	0.3/7.1	400	401

REGISTERED CIVIL ENGINEER 04-04-14 DATE

06-09-14
PLANS APPROVAL DATE

REGISTERED PROFESSIONAL ENGINEER Grant Schuster No. C63897 Exp. 09-31-2014 CIVIL STATE OF CALIFORNIA

The State of California or its officers or agents shall not be responsible for the accuracy or completeness of scanned copies of this plan sheet.

LEGEND:

- Indicates existing structure
- Indicates class 8 RSP fabric, for additional class 8 RSP fabric see "Rock Drain Details" on "Structural Details" sheet
- Indicates Structure Excavation
- Indicates Structure Backfill
- Indicates class 3 permeable material backfill
- Indicated structure concrete (unreinforced)
- Indicates structure backfill where compaction is not required. Backfill must be soil free of organic matter, trash, or other unsatisfactory material.

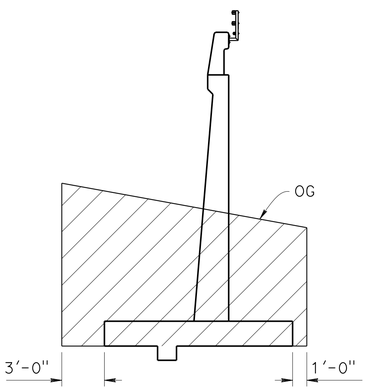

EXCAVATION

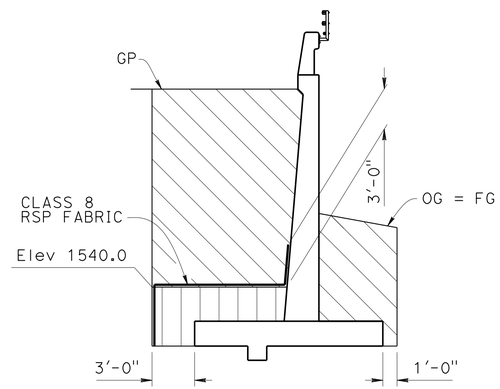

FROM Sta 264+04 to 265+24

BACKFILL

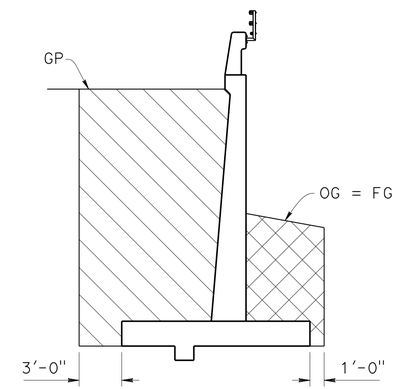

BEGIN WALL TO Sta 264+07 & Sta 265+24 TO END WALL

BACKFILL

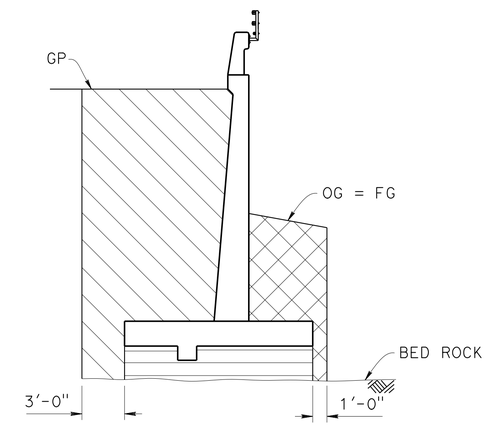

@ LOCATIONS WHERE BOTTOM OF FOOTING IS ABOVE BEDROCK

BACKFILL

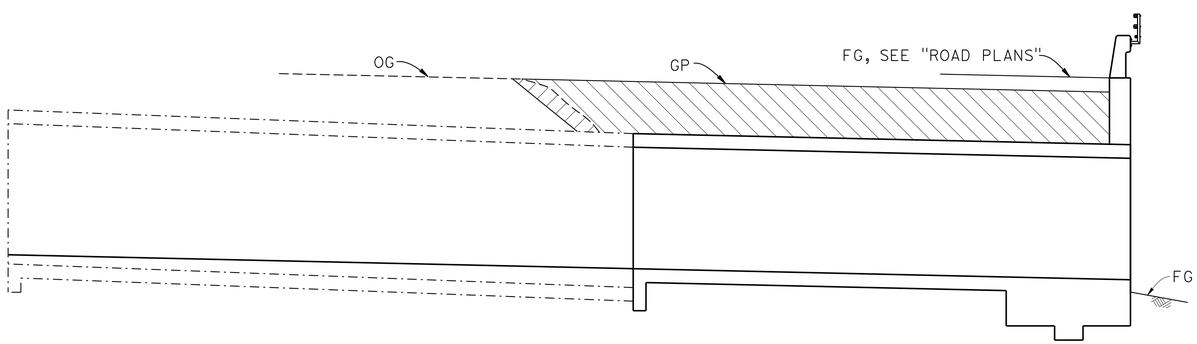

@ EXISTING AND NEW CULVERT

LIMITS OF EXCAVATION AND BACKFILL

NO SCALE

DESIGN	BY G. Schuster	CHECKED M. Akkari
DETAILS	BY J. Yang	CHECKED M. Akkari
QUANTITIES	BY H. Fang	CHECKED G. Schuster

STATE OF CALIFORNIA
DEPARTMENT OF TRANSPORTATION

DIVISION OF ENGINEERING SERVICES
STRUCTURE DESIGN
DESIGN BRANCH 2

BRIDGE NO.

POST MILE 6.2

SAWPIT GULCH CULVERT AND WALL
EXCAVATION AND BACKFILL DETAILS

STRUCTURES DESIGN DETAIL SHEET (ENGLISH) (REV. 09-01-10)

ORIGINAL SCALE IN INCHES FOR REDUCED PLANS 0 1 2 3

UNIT: 3577
PROJECT NUMBER & PHASE: 0200020042 1
CONTRACT NO.: 02-3E4101

DISREGARD PRINTS BEARING EARLIER REVISION DATES

REVISION DATES 3-26-14

SHEET 6 OF 7

FILE => g-exc_back_det.dgn

USERNAME => s113152 DATE PLOTTED => 25-AUG-2014 TIME PLOTTED => 08:27

DIST	COUNTY	ROUTE	POST MILES TOTAL PROJECT	SHEET No.	TOTAL SHEETS
02	Sha	299	0.3/7.1	401	401

REGISTERED CIVIL ENGINEER 03-13-2014 DATE

06-09-14
PLANS APPROVAL DATE

REGISTERED PROFESSIONAL ENGINEER Grant Schuster No. C63897 Exp. 09-31-2014 CIVIL STATE OF CALIFORNIA

The State of California or its officers or agents shall not be responsible for the accuracy or completeness of electronic copies of this plan sheet.

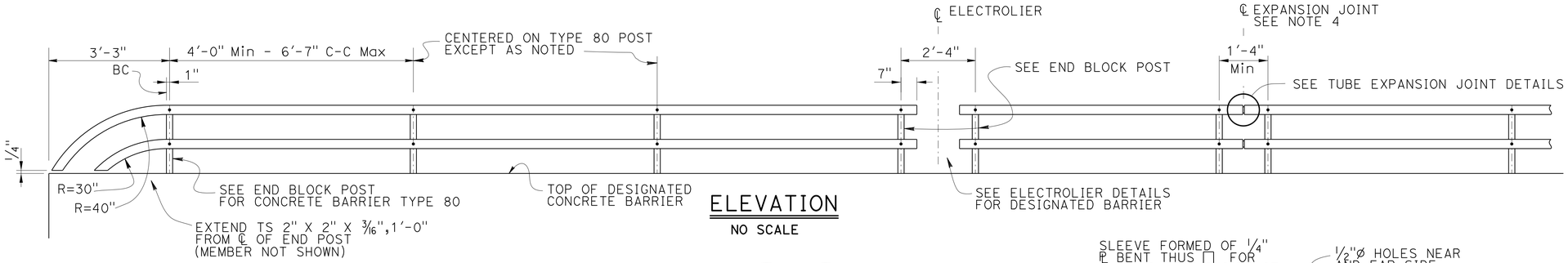

ELEVATION
NO SCALE

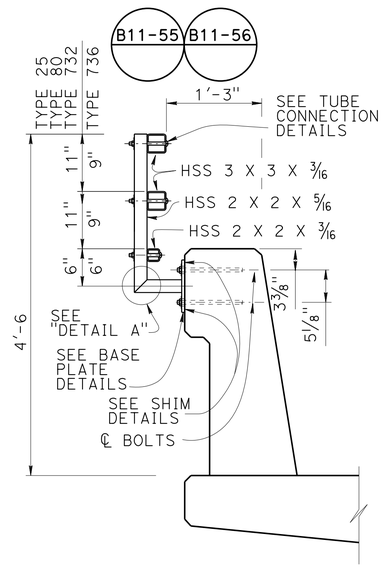

TYPE 732 OR 736
1" = 1'-0"

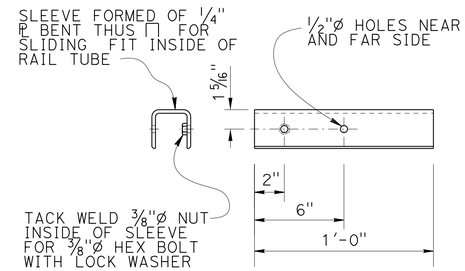

SLEEVE DETAIL
NO SCALE

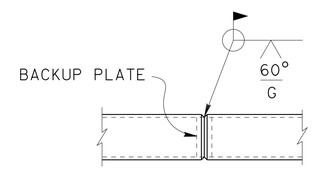

WELDED SPLICE DETAIL
NO SCALE

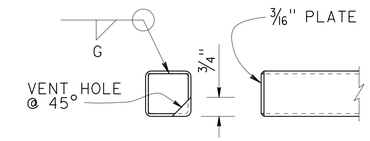

RAIL CAP DETAIL
NO SCALE

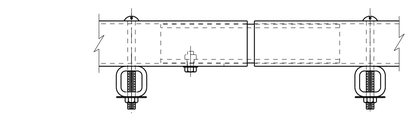

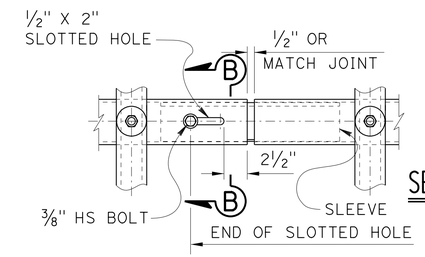

SECTION B-B
NO SCALE

TUBE EXPANSION JOINT DETAILS
NO SCALE

NOTES:

1. Post must be normal to railing.
2. Rail tubes must be shop bent or fabricated to fit horizontal curve when radius is less than 12".
3. Tube expansion joints must be located in the tubes spanning deck or wall joints. Increase joint width in tubes to match expansion joint width and increase sleeve length correspondingly.
4. Top rail tube must be continuous over not less than two posts except a short post spacing is permitted near deck or wall joints, electroliers, or other rail discontinuities as noted.
5. See Project Plans for limits of tubular hand railing.

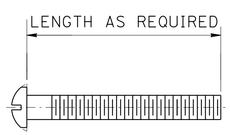

ROUND HEAD SCREW DETAIL
NO SCALE

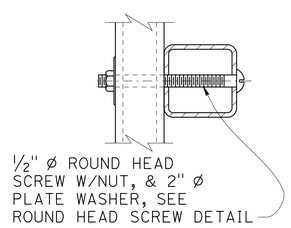

TUBE CONNECTION DETAIL
NO SCALE

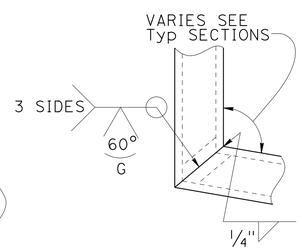

DETAIL A
NO SCALE

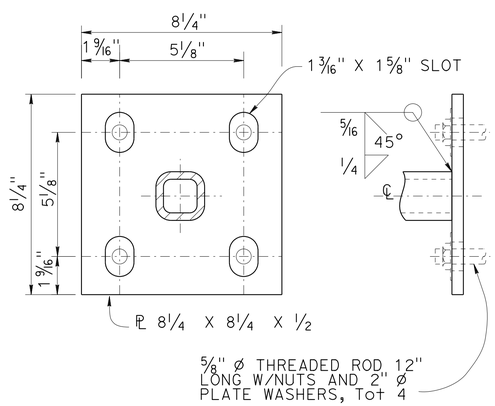

BASE PLATE DETAIL
NO SCALE

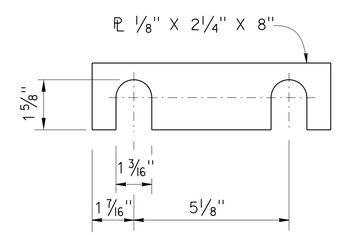

SHIM DETAILS
NO SCALE

STANDARD DRAWING		STATE OF CALIFORNIA DEPARTMENT OF TRANSPORTATION	DIVISION OF ENGINEERING SERVICES	BRIDGE NO.	SAWPIT GULCH CULVERT AND WALL
FILE NO. xs16-035	APPROVAL DATE August 2012			POST MILE 6.2	CONCRETE BARRIER TYPE 736
					TUBULAR BICYCLE RAILING DETAILS

DS OSD 2147A (ENGLISH STANDARD DRAWING "XS" BORDER REV. (02-02-11)

ORIGINAL SCALE IN INCHES FOR REDUCED PLANS 0 1 2 3

UNIT: X
PROJECT NUMBER & PHASE: X
CONTRACT NO.: X

DISREGARD PRINTS BEARING EARLIER REVISION DATES

REVISION DATES				SHEET	OF
8/7/12				7	7

FILE => xs16-035[1].dgn

USERNAME => s115152 DATE PLOTTED => 25-AUG-2014 TIME PLOTTED => 08:27