Dist	COUNTY	ROUTE	KILOMETER POST TOTAL PROJECT	SHEET No.	TOTAL SHEETS
02	Plu	70	56.5/57.2	1	149

SARRA-P070(099)E

STATE OF CALIFORNIA
DEPARTMENT OF TRANSPORTATION

PROJECT PLANS FOR CONSTRUCTION ON
STATE HIGHWAY

IN PLUMAS COUNTY
NEAR KEDDIE FROM 0.3 KM WEST TO
0.3 KM EAST OF THE SPANISH CREEK BRIDGE

To be supplemented by Standard Plans dated July 2004

INDEX OF SHEETS

SHEET No.	DESCRIPTION
1	TITLE AND LOCATION MAP
2-8	TYPICAL CROSS SECTIONS
9-12	LAYOUTS
13-16	PROFILES AND SUPERELEVATION DIAGRAMS
17-26	CONSTRUCTION DETAILS
27-30	EROSION CONTROL
31-37	DRAINAGE PLANS, PROFILES, DETAILS AND QUANTITIES
38-39	CONSTRUCTION AREA SIGNS
40-54	STAGE CONSTRUCTION PLANS AND QUANTITIES
55-58	PAVEMENT DELINEATION PLANS AND QUANTITIES
59-60	SUMMARY OF QUANTITIES
61-62	ELECTRICAL PLANS
63-87	REVISED AND NEW STANDARD PLANS

STRUCTURE PLANS

88-142	Spanish Creek Bridge (Replace), Br No. 09-0077
143-149	Spanish Creek Soil Nail Wall, Br No. 09E0001

THE STANDARD PLANS LIST APPLICABLE TO THIS CONTRACT IS INCLUDED IN THE NOTICE TO BIDDERS AND SPECIAL PROVISIONS BOOK.

LOCATION MAP

Caltrans

Caltrans Metric

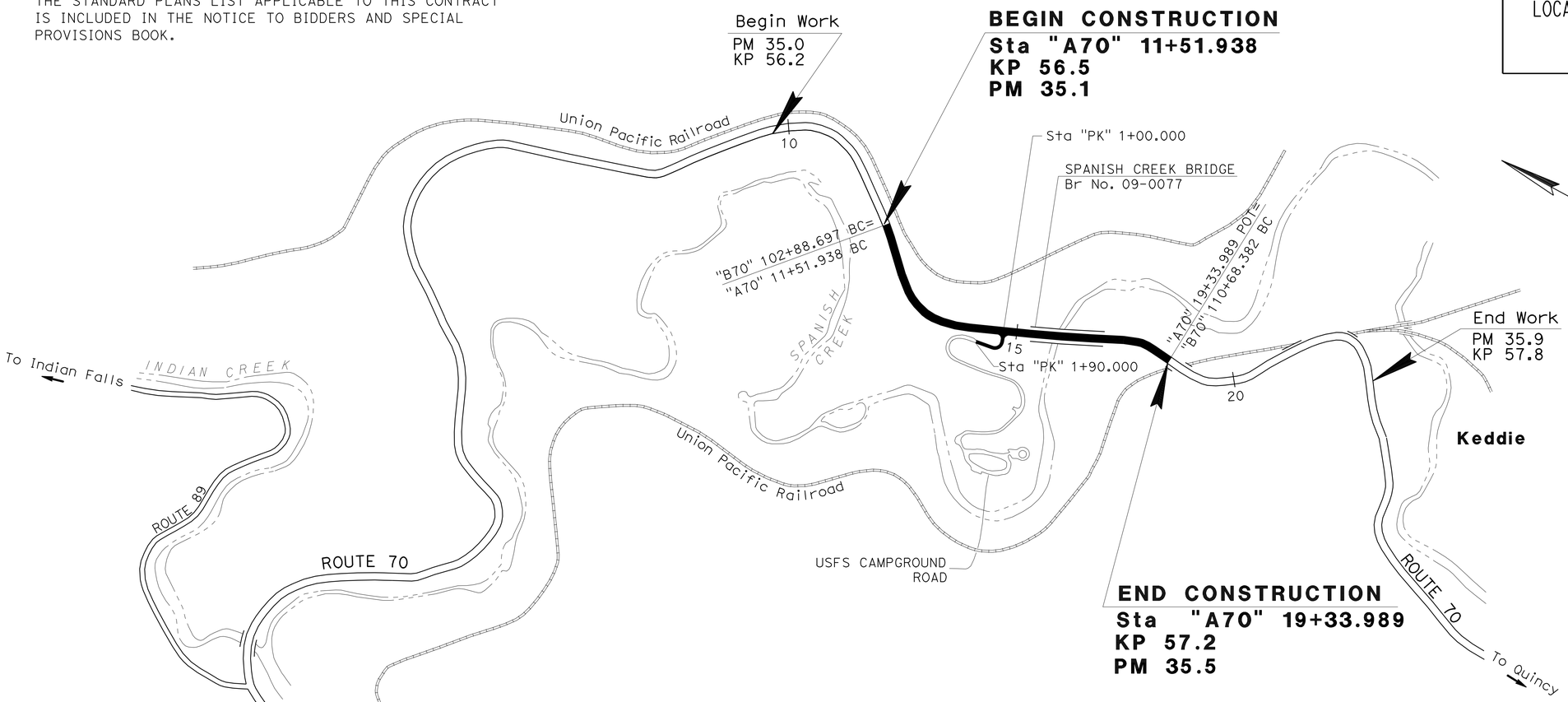

NO SCALE

THE CONTRACTOR SHALL POSSESS THE CLASS (OR CLASSES) OF LICENSE AS SPECIFIED IN THE "NOTICE TO BIDDERS."

Davinder Minhas 7-21-09
PROJECT ENGINEER DATE
REGISTERED CIVIL ENGINEER

REGISTERED PROFESSIONAL ENGINEER
DAVINDER MINHAS
No. 70022
Exp. 9-30-10
CIVIL
STATE OF CALIFORNIA

November 2, 2009
PLANS APPROVAL DATE

THE STATE OF CALIFORNIA OR ITS OFFICERS OR AGENTS SHALL NOT BE RESPONSIBLE FOR THE ACCURACY OR COMPLETENESS OF ELECTRONIC COPIES OF THIS PLAN SHEET.

PROJECT MANAGER: E. ORR
DESIGN ENGINEER: D. MINHAS

LAST REVISION 00-00-00
DATE PLOTTED => 27-JAN-2010
TIME PLOTTED => 1357

CONTRACT No. 02-373104
CU 03254 EA 373101

Dist	COUNTY	ROUTE	KILOMETER POST TOTAL PROJECT	SHEET No.	TOTAL SHEETS
02	Plu	70	56.5/57.2	2	149

Davinder Minhas 7-21-09
REGISTERED CIVIL ENGINEER DATE

11-2-09
PLANS APPROVAL DATE

REGISTERED PROFESSIONAL ENGINEER
DAVINDER MINHAS
No. 70022
Exp. 9-30-10
CIVIL
STATE OF CALIFORNIA

THE STATE OF CALIFORNIA OR ITS OFFICERS OR AGENTS SHALL NOT BE RESPONSIBLE FOR THE ACCURACY OR COMPLETENESS OF ELECTRONIC COPIES OF THIS PLAN SHEET.

Caltrans Metric

NOTES:

1. DIMENSIONS OF THE STRUCTURAL SECTION ARE SUBJECT TO TOLERANCES SPECIFIED IN THE STANDARD SPECIFICATIONS.
2. SUPERELEVATION AS SHOWN OR AS DIRECTED BY THE ENGINEER.
3. SEE "LAYOUT" SHEETS FOR TRANSITION AREAS NOT SHOWN.
4. EXACT LOCATION OF DIKE TO BE DETERMINED BY THE ENGINEER.
5. BENCHED FILL SLOPE "A70" 12+90 TO 13+70 (RIGHT) SEE TYPICAL CROSS-SECTIONS SHEET X-4 FOR FILL SLOPE DETAILS AT THESE LOCATIONS.
6. TIE NEW METAL BEAM GUARD RAILING INTO EXISTNG @ "A70" 11+80.

LEGEND:

HMA HOT MIX ASPHALT

DESIGN DESIGNATION

10 YEAR TI = 9.0
ADT (2020) = 3900
DESIGN SPEED = 90 KPH
ADT (2005) = 3000

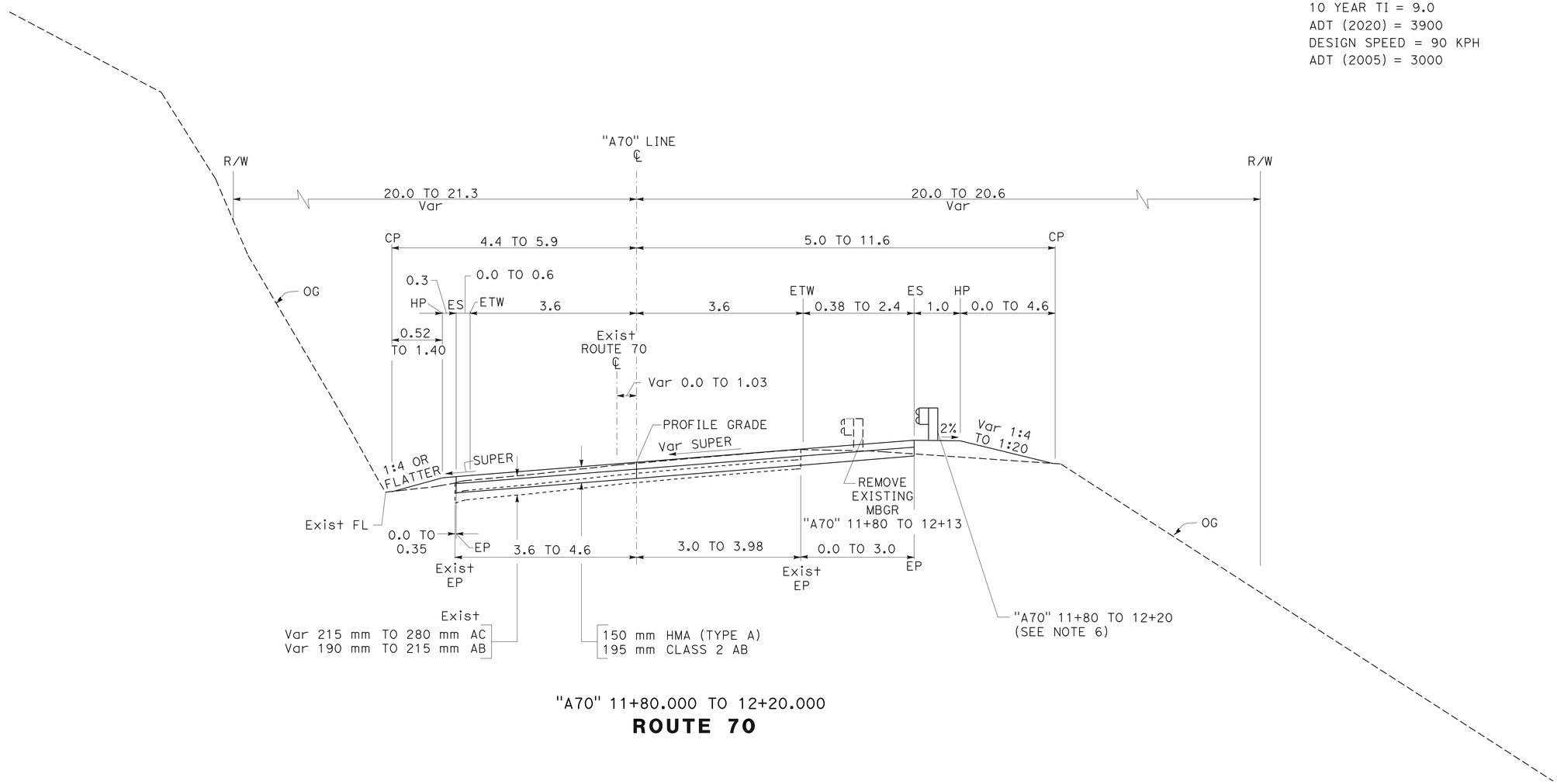

"A70" 11+80.000 TO 12+20.000

ROUTE 70

ALL DIMENSIONS ARE IN METERS UNLESS OTHERWISE SHOWN

TYPICAL CROSS SECTIONS

NO SCALE

X-1

STATE OF CALIFORNIA - DEPARTMENT OF TRANSPORTATION
NORTH REGION
OFFICE OF DESIGN, WEST
DESIGN BRANCH S7

Caltrans

FUNCTIONAL SUPERVISOR: CYRUS HUI

CALCULATED-DESIGNED BY: DAVINDER MINHAS
CHECKED BY: CYRUS HUI

REVISED BY | DATE REVISED

LAST REVISION 00-00-00 | DATE PLOTTED => 10-NOV-2009 | TIME PLOTTED => 07:03

Dist	COUNTY	ROUTE	KILOMETER POST TOTAL PROJECT	SHEET No.	TOTAL SHEETS
02	Plu	70	56.5/57.2	3	149

Davinder Minhas 7-21-09
REGISTERED CIVIL ENGINEER DATE

11-2-09
PLANS APPROVAL DATE

REGISTERED PROFESSIONAL ENGINEER DAVINDER MINHAS No. 70022 Exp. 9-30-10 CIVIL STATE OF CALIFORNIA

THE STATE OF CALIFORNIA OR ITS OFFICERS OR AGENTS SHALL NOT BE RESPONSIBLE FOR THE ACCURACY OR COMPLETENESS OF ELECTRONIC COPIES OF THIS PLAN SHEET.

Caltrans Metric

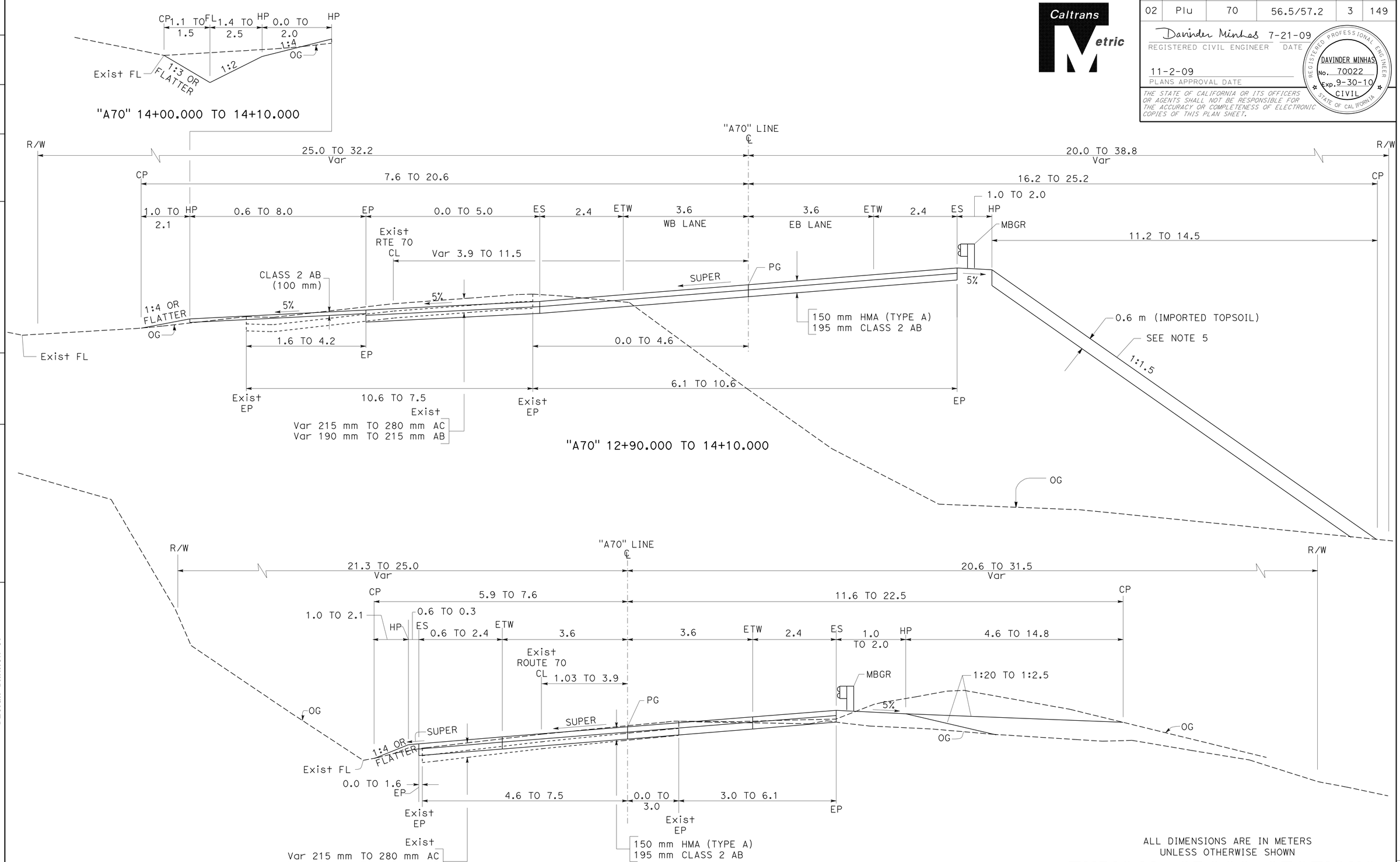

ROUTE 70

ALL DIMENSIONS ARE IN METERS
UNLESS OTHERWISE SHOWN

TYPICAL CROSS SECTIONS

NO SCALE

X-2

REVISED BY	DATE REVISED

CALCULATED-DESIGNED BY	CHECKED BY
DAVINDER MINHAS	CYRUS HUI

FUNCTIONAL SUPERVISOR: CYRUS HUI

STATE OF CALIFORNIA - DEPARTMENT OF TRANSPORTATION
NORTH REGION
OFFICE OF DESIGN, WEST
DESIGN BRANCH S7
Caltrans

LAST REVISION 00-00-00 | DATE PLOTTED => 10-NOV-2009 | TIME PLOTTED => 07:03

Dist	COUNTY	ROUTE	KILOMETER POST TOTAL PROJECT	SHEET No.	TOTAL SHEETS
02	Plu	70	56.5/57.2	4	149

Davinder Minhas 7-21-09
REGISTERED CIVIL ENGINEER DATE

11-2-09
PLANS APPROVAL DATE

REGISTERED PROFESSIONAL ENGINEER DAVINDER MINHAS No. 70022 Exp. 9-30-10 CIVIL STATE OF CALIFORNIA

THE STATE OF CALIFORNIA OR ITS OFFICERS OR AGENTS SHALL NOT BE RESPONSIBLE FOR THE ACCURACY OR COMPLETENESS OF ELECTRONIC COPIES OF THIS PLAN SHEET.

Caltrans Metric

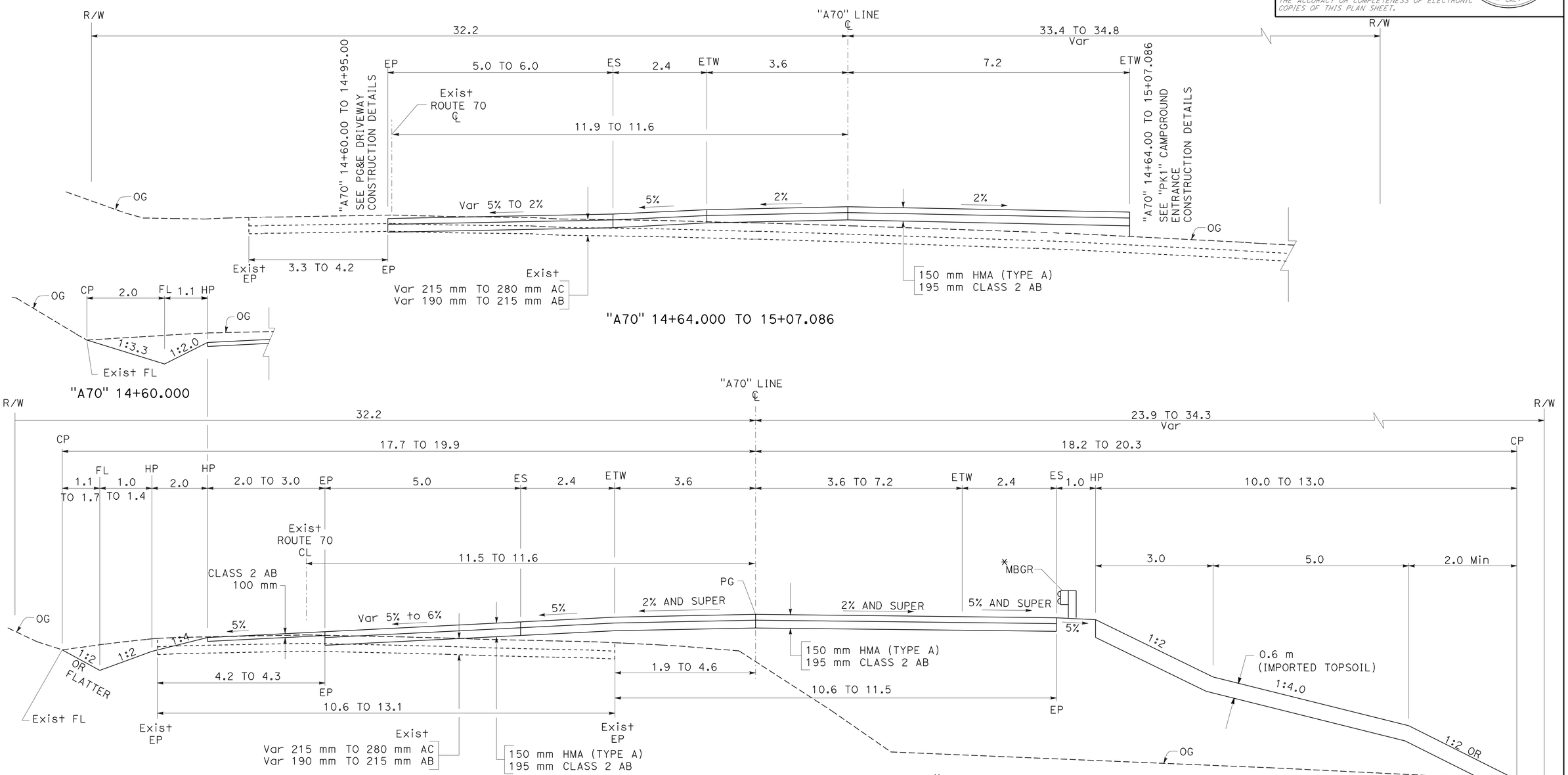

ALL DIMENSIONS ARE IN METERS
UNLESS OTHERWISE SHOWN

ROUTE 70

TYPICAL CROSS SECTIONS

NO SCALE

X-3

DAVINDER MINHAS — REVISED BY — DATE REVISED
CYRUS HUI — CALCULATED-DESIGNED BY — CHECKED BY
CYRUS HUI — FUNCTIONAL SUPERVISOR

STATE OF CALIFORNIA - DEPARTMENT OF TRANSPORTATION
NORTH REGION
OFFICE OF DESIGN, WEST
DESIGN BRANCH S7
Caltrans

LAST REVISION 00-00-00 | DATE PLOTTED => 10-NOV-2009 | TIME PLOTTED => 07:03

Dist	COUNTY	ROUTE	KILOMETER POST TOTAL PROJECT	SHEET No.	TOTAL SHEETS
02	Plu	70	56.5/57.2	5	149

Davinder Minhas 7-21-09
REGISTERED CIVIL ENGINEER DATE

11-2-09
PLANS APPROVAL DATE

REGISTERED PROFESSIONAL ENGINEER
DAVINDER MINHAS
No. 70022
Exp. 9-30-10
CIVIL
STATE OF CALIFORNIA

THE STATE OF CALIFORNIA OR ITS OFFICERS OR AGENTS SHALL NOT BE RESPONSIBLE FOR THE ACCURACY OR COMPLETENESS OF ELECTRONIC COPIES OF THIS PLAN SHEET.

Caltrans Metric

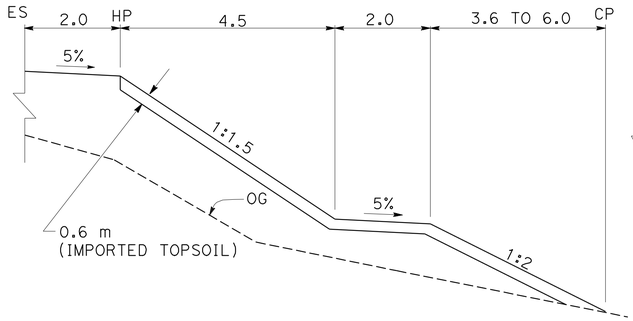

BENCHED FILL SLOPE
"A70" 12+90 TO 13+00

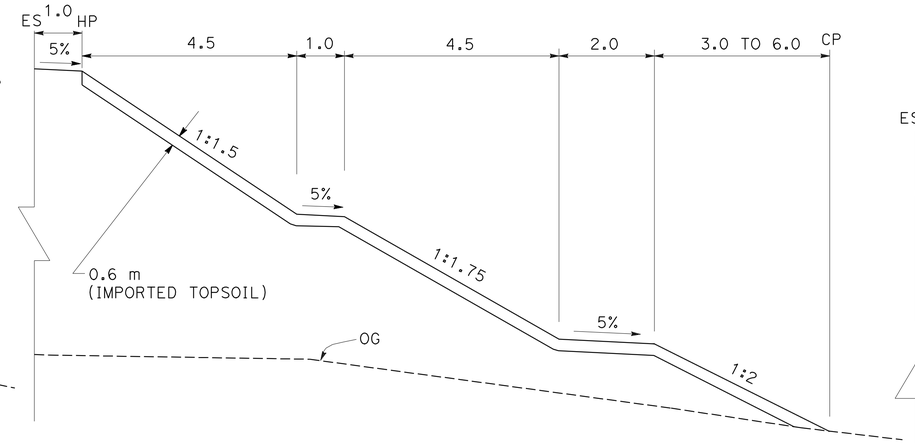

BENCHED FILL SLOPE
"A70" 13+20 TO 13+60

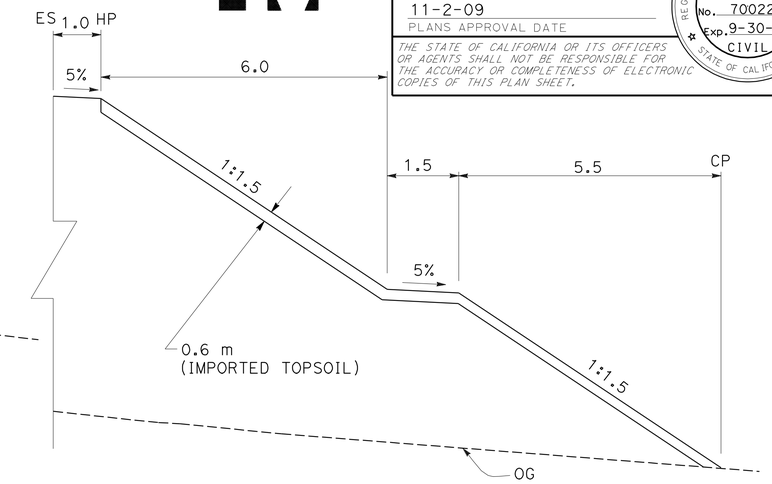

BENCHED FILL SLOPE
"A70" 13+70

SPANISH CREEK BRIDGE (REPLACE) (BR NO. 09-0077)
(SEE GENERAL PLANS)
"A70" 15+55.145 TO 17+46.385

ROUTE 70

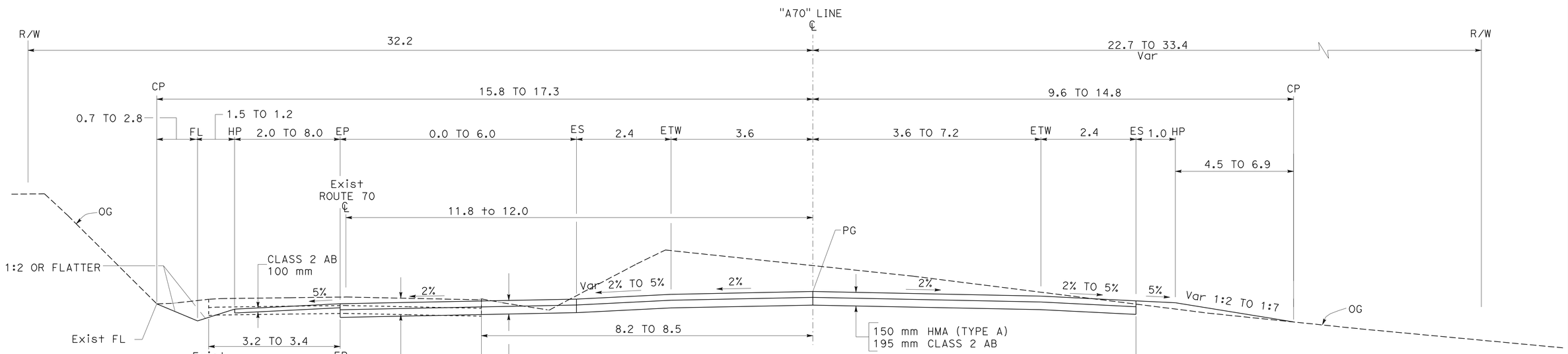

"A70" 15+07.086 TO 15+55.145

ROUTE 70

ALL DIMENSIONS ARE IN METERS
UNLESS OTHERWISE SHOWN

TYPICAL CROSS SECTIONS

NO SCALE

X-4

STATE OF CALIFORNIA - DEPARTMENT OF TRANSPORTATION
NORTH REGION
OFFICE OF DESIGN, WEST
DESIGN BRANCH S7
Caltrans

FUNCTIONAL SUPERVISOR: CYRUS HUI
CALCULATED-DESIGNED BY: DAVINDER MINHAS
CHECKED BY: CYRUS HUI
REVISED BY
DATE REVISED

LAST REVISION 00-00-00
DATE PLOTTED => 10-NOV-2009
TIME PLOTTED => 07:03

Dist	COUNTY	ROUTE	KILOMETER POST TOTAL PROJECT	SHEET No.	TOTAL SHEETS
02	Plu	70	56.5/57.2	6	149

Davinder Minhas 7-21-09
REGISTERED CIVIL ENGINEER DATE

11-2-09
PLANS APPROVAL DATE

REGISTERED PROFESSIONAL ENGINEER
DAVINDER MINHAS
No. 70022
Exp. 9-30-10
CIVIL
STATE OF CALIFORNIA

THE STATE OF CALIFORNIA OR ITS OFFICERS OR AGENTS SHALL NOT BE RESPONSIBLE FOR THE ACCURACY OR COMPLETENESS OF ELECTRONIC COPIES OF THIS PLAN SHEET.

Caltrans Metric

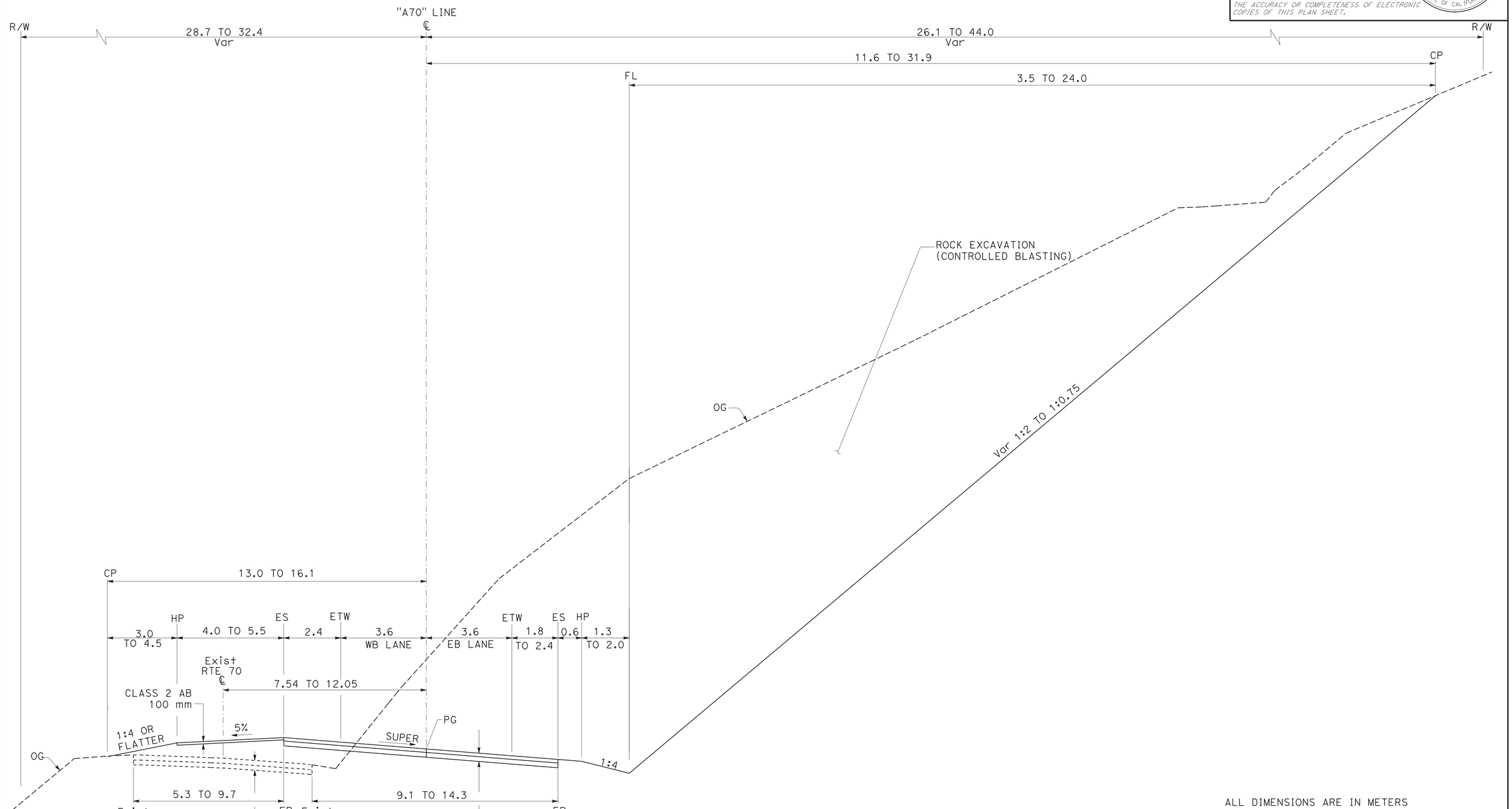

"A70" 17+46.385 TO 18+30.000

ROUTE 70

ALL DIMENSIONS ARE IN METERS
UNLESS OTHERWISE SHOWN

TYPICAL CROSS SECTIONS

NO SCALE

X-5

REVISED BY	DATE REVISED

CALCULATED-DESIGNED BY: DAVINDER MINHAS
CHECKED BY: CYRUS HUI
FUNCTIONAL SUPERVISOR: CYRUS HUI

STATE OF CALIFORNIA - DEPARTMENT OF TRANSPORTATION
NORTH REGION
OFFICE OF DESIGN, WEST
DESIGN BRANCH S7
Caltrans

LAST REVISION 00-00-00 | DATE PLOTTED => 10-NOV-2009 | TIME PLOTTED => 07:03

Dist	COUNTY	ROUTE	KILOMETER POST TOTAL PROJECT	SHEET No.	TOTAL SHEETS
02	Plu	70	56.5/57.2	7	149

Davinder Minhas 7-21-09
REGISTERED CIVIL ENGINEER DATE

11-2-09
PLANS APPROVAL DATE

REGISTERED PROFESSIONAL ENGINEER
DAVINDER MINHAS
No. 70022
Exp. 9-30-10
CIVIL
STATE OF CALIFORNIA

THE STATE OF CALIFORNIA OR ITS OFFICERS OR AGENTS SHALL NOT BE RESPONSIBLE FOR THE ACCURACY OR COMPLETENESS OF ELECTRONIC COPIES OF THIS PLAN SHEET.

Caltrans Metric

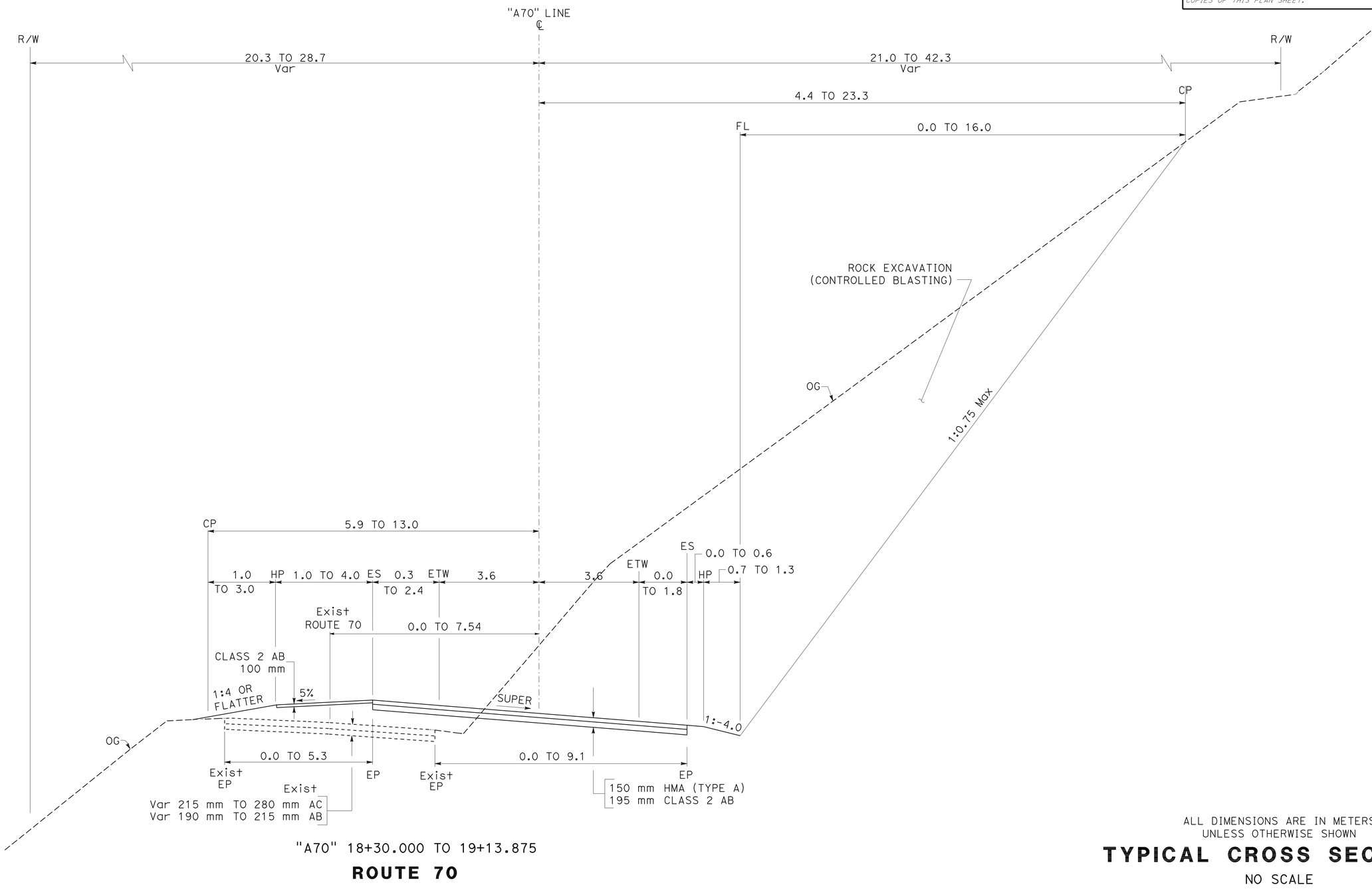

"A70" 18+30.000 TO 19+13.875

ROUTE 70

ALL DIMENSIONS ARE IN METERS
UNLESS OTHERWISE SHOWN

TYPICAL CROSS SECTIONS

NO SCALE

X-6

STATE OF CALIFORNIA - DEPARTMENT OF TRANSPORTATION
NORTH REGION
OFFICE OF DESIGN, WEST
DESIGN BRANCH S7

Caltrans

FUNCTIONAL SUPERVISOR: CYRUS HUI

CALCULATED-DESIGNED BY: SCOTT LEWIS
CHECKED BY: DAVINDER MINHAS

REVISED BY
DATE REVISED

LAST REVISION 00-00-00
DATE PLOTTED => 10-NOV-2009
TIME PLOTTED => 07:04

Dist	COUNTY	ROUTE	KILOMETER POST TOTAL PROJECT	SHEET No.	TOTAL SHEETS
02	Plu	70	56.5/57.2	8	149

Davinder Minhas 7-21-09
REGISTERED CIVIL ENGINEER DATE

11-2-09
PLANS APPROVAL DATE

REGISTERED PROFESSIONAL ENGINEER DAVINDER MINHAS No. 70022 Exp. 9-30-10 CIVIL STATE OF CALIFORNIA

THE STATE OF CALIFORNIA OR ITS OFFICERS OR AGENTS SHALL NOT BE RESPONSIBLE FOR THE ACCURACY OR COMPLETENESS OF ELECTRONIC COPIES OF THIS PLAN SHEET.

Caltrans Metric

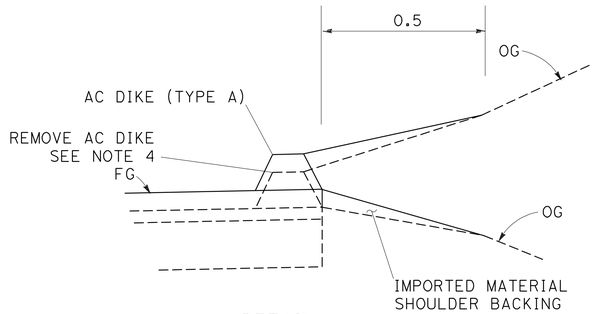

DETAIL A

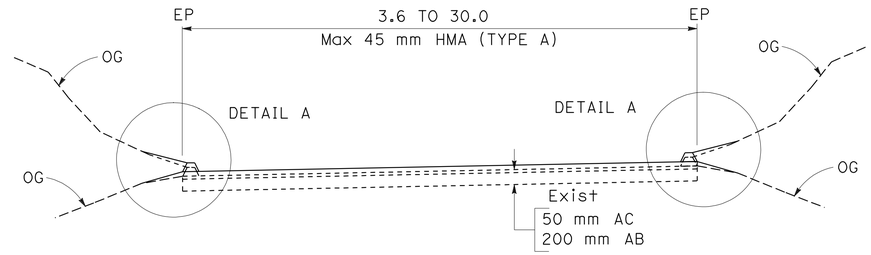

CAMP GROUND ROAD

APPROXIMATE LENGTH OF CAMPGROUND ROAD = 1030 m
APPROXIMATE LENGTH OF ASPHALT CONCRETE DIKE = 410 m

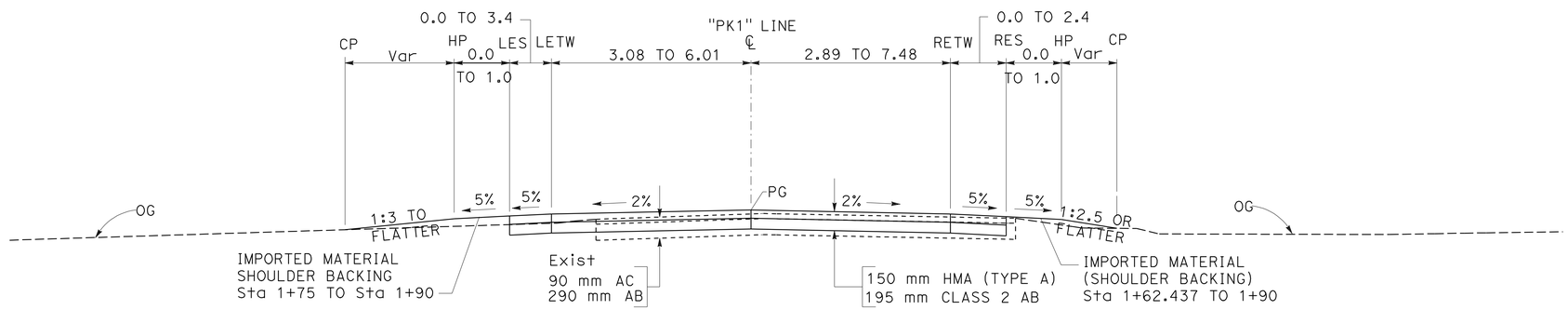

CAMP GROUND ROAD

"PK1" 1+25.000 TO 1+90.000

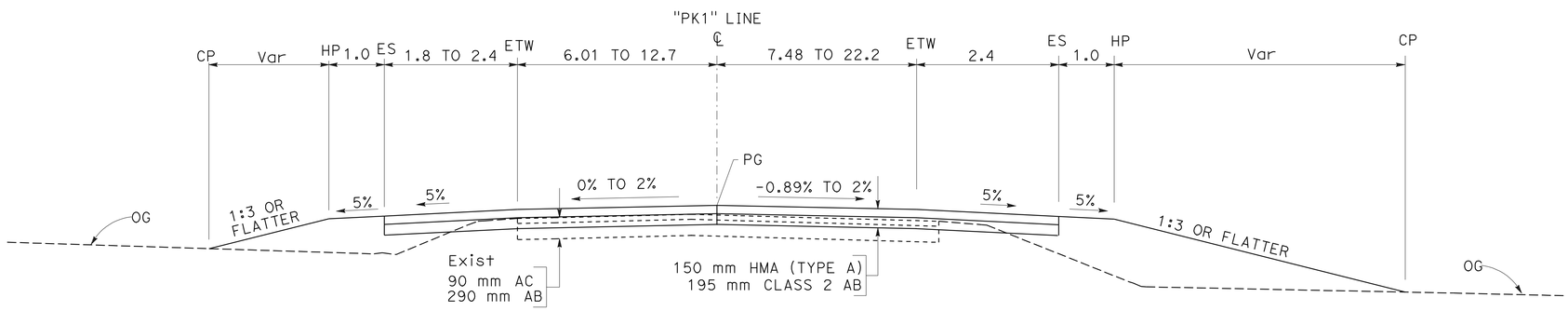

CAMP GROUND ROAD

"PK1" 1+09.200 TO 1+25.000
(SEE CONSTRUCTION DETAILS)

ALL DIMENSIONS ARE IN METERS
UNLESS OTHERWISE SHOWN

TYPICAL CROSS SECTIONS

NO SCALE

X-7

REVISED BY	DATE REVISED

CALCULATED-DESIGNED BY	JOHN DUFFY
CHECKED BY	SCOTT LEWIS
FUNCTIONAL SUPERVISOR	CYRUS HUI

STATE OF CALIFORNIA - DEPARTMENT OF TRANSPORTATION
NORTH REGION
OFFICE OF DESIGN, WEST
DESIGN BRANCH S7
Caltrans

LAST REVISION 00-00-00 DATE PLOTTED => 10-NOV-2009 TIME PLOTTED => 07:04

Dist	COUNTY	ROUTE	KILOMETER POST TOTAL PROJECT	SHEET No.	TOTAL SHEETS
02	Plu	70	56.5/57.2	9	149

Davinder Minhas 7-21-09
REGISTERED CIVIL ENGINEER DATE

11-2-09
PLANS APPROVAL DATE

REGISTERED PROFESSIONAL ENGINEER DAVINDER MINHAS No. 70022 Exp. 9-30-10 CIVIL STATE OF CALIFORNIA

THE STATE OF CALIFORNIA OR ITS OFFICERS OR AGENTS SHALL NOT BE RESPONSIBLE FOR THE ACCURACY OR COMPLETENESS OF ELECTRONIC COPIES OF THIS PLAN SHEET.

Caltrans Metric

NOTES:

1. FOR COMPLETE RIGHT OF WAY DATA, SEE RIGHT OF WAY RECORD MAPS AT DISTRICT OFFICE.
2. MINOR CONCRETE VEGETATION CONTROL BARRIER SHALL BE PLACED AT ALL METAL BEAM GUARD RAIL LOCATIONS.
3. EXACT LOCATION OF INTERPRETIVE EXHIBIT FRAMES TO BE DETERMINED BY THE ENGINEER. SEE LAYOUT SHEET(L-2) FOR APPROXIMATE LOCATION.
4. FOR DETAILS OF DOUBLE TWISTED WIRE MESH DRAPERY SYSTEM, SEE CONSTRUCTION DETAIL SHEETS (SHEETS C-6 THROUGH C-10).
5. EXISTING WELLS TO BE PROTECTED IN PLACE.
6. EXACT LOCATIONS FOR TEMPORARY FENCE (TYPE ESA) TO BE DETERMINED IN THE FIELD.
7. EXACT LOCATION OF DIKE REMOVAL AND PLACEMENT TO BE DETERMINED BY THE ENGINEER (SEE X-7).
8. EXACT LOCATION OF Temp STREAM CROSSINGS (TRESTLES) TO BE DETERMINED BY THE ENGINEER.
9. ALL STATIONING BASED ON "A70" LINE UNLESS OTHERWISE NOTED.
10. "B70" LINE REPRESENTS EXISTING ROUTE 70 CENTERLINE.

ABBREVIATIONS

PG&E	PACIFIC GAS & ELECTRIC CO.
TCE	TEMPORARY CONSTRUCTION EASEMENT
USFS	UNITED STATES FOREST SERVICE
L	LENGTH OF TEMPORARY FENCE (TYPE ESA)

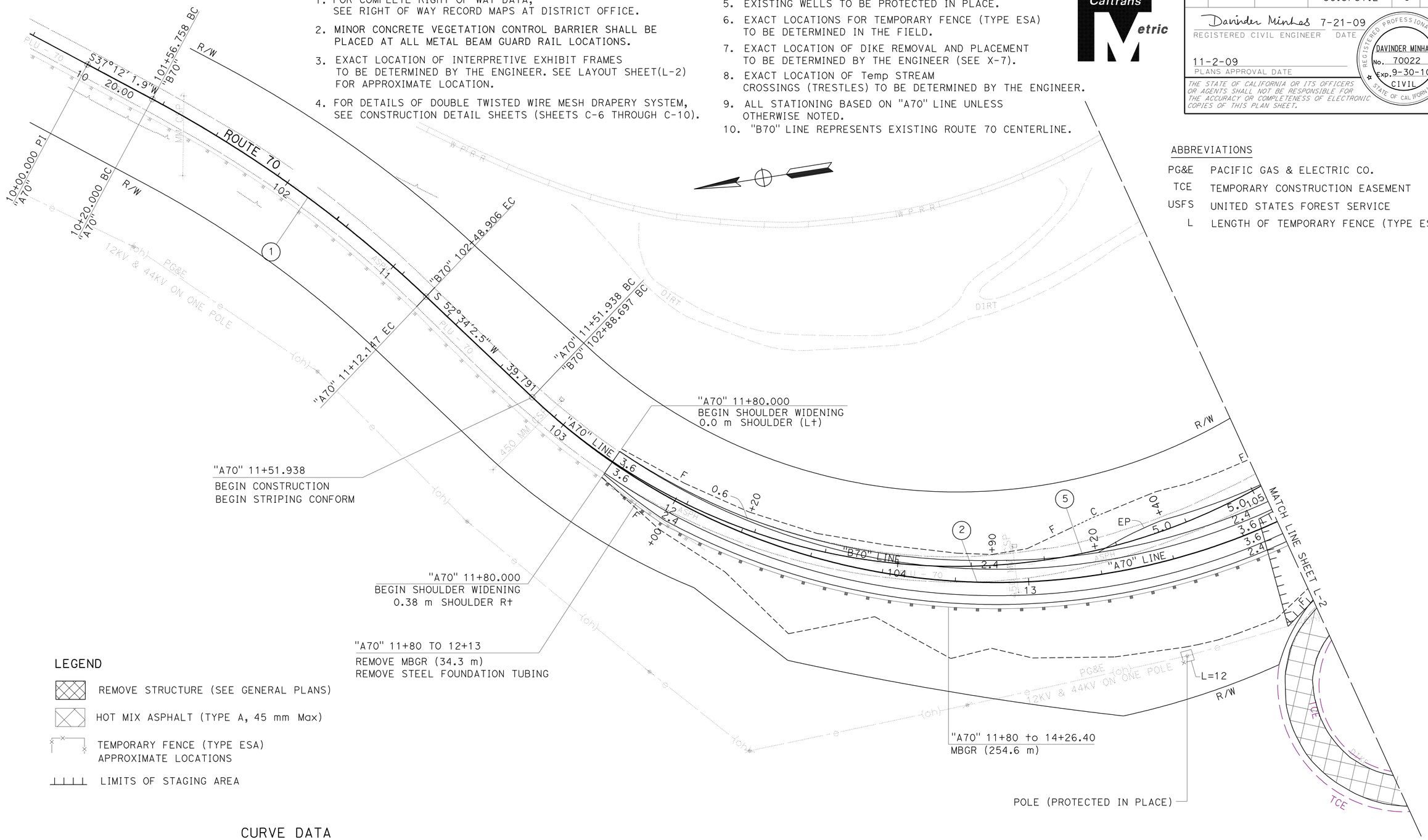

LEGEND

- REMOVE STRUCTURE (SEE GENERAL PLANS)
- HOT MIX ASPHALT (TYPE A, 45 mm Max)
- TEMPORARY FENCE (TYPE ESA) APPROXIMATE LOCATIONS
- LIMITS OF STAGING AREA

CURVE DATA

No.	R	Δ	T	L
1	343.57	15°22'01"	46.35	92.15
2	183.59	75°39'00"	142.54	242.41
5	167.64	75°38'60"	130.15	221.34

ALL DIMENSIONS ARE IN METERS UNLESS OTHERWISE SHOWN

LAYOUT

SCALE 1:500

L-1

STATE OF CALIFORNIA - DEPARTMENT OF TRANSPORTATION
NORTH REGION
OFFICE OF DESIGN, WEST
DESIGN BRANCH S7

Caltrans

FUNCTIONAL SUPERVISOR: CYRUS HUI
CALCULATED-DESIGNED BY: DAVINDER MINHAS
CHECKED BY: CYRUS HUI
REVISED BY
DATE REVISED

LAST REVISION 00-00-00
DATE PLOTTED => 10-NOV-2009
TIME PLOTTED => 07:04

Dist	COUNTY	ROUTE	KILOMETER POST TOTAL PROJECT	SHEET No.	TOTAL SHEETS
02	Plu	70	56.5/57.2	10	149

Davinder Minhas 7-21-09
REGISTERED CIVIL ENGINEER DATE

11-2-09
PLANS APPROVAL DATE

REGISTERED PROFESSIONAL ENGINEER DAVINDER MINHAS No. 70022 Exp. 9-30-10 CIVIL STATE OF CALIFORNIA

THE STATE OF CALIFORNIA OR ITS OFFICERS OR AGENTS SHALL NOT BE RESPONSIBLE FOR THE ACCURACY OR COMPLETENESS OF ELECTRONIC COPIES OF THIS PLAN SHEET.

Caltrans Metric

NOTE: FOR COMPLETE RIGHT OF WAY DATA,
SEE RIGHT OF WAY RECORD MAPS AT DISTRICT OFFICE.

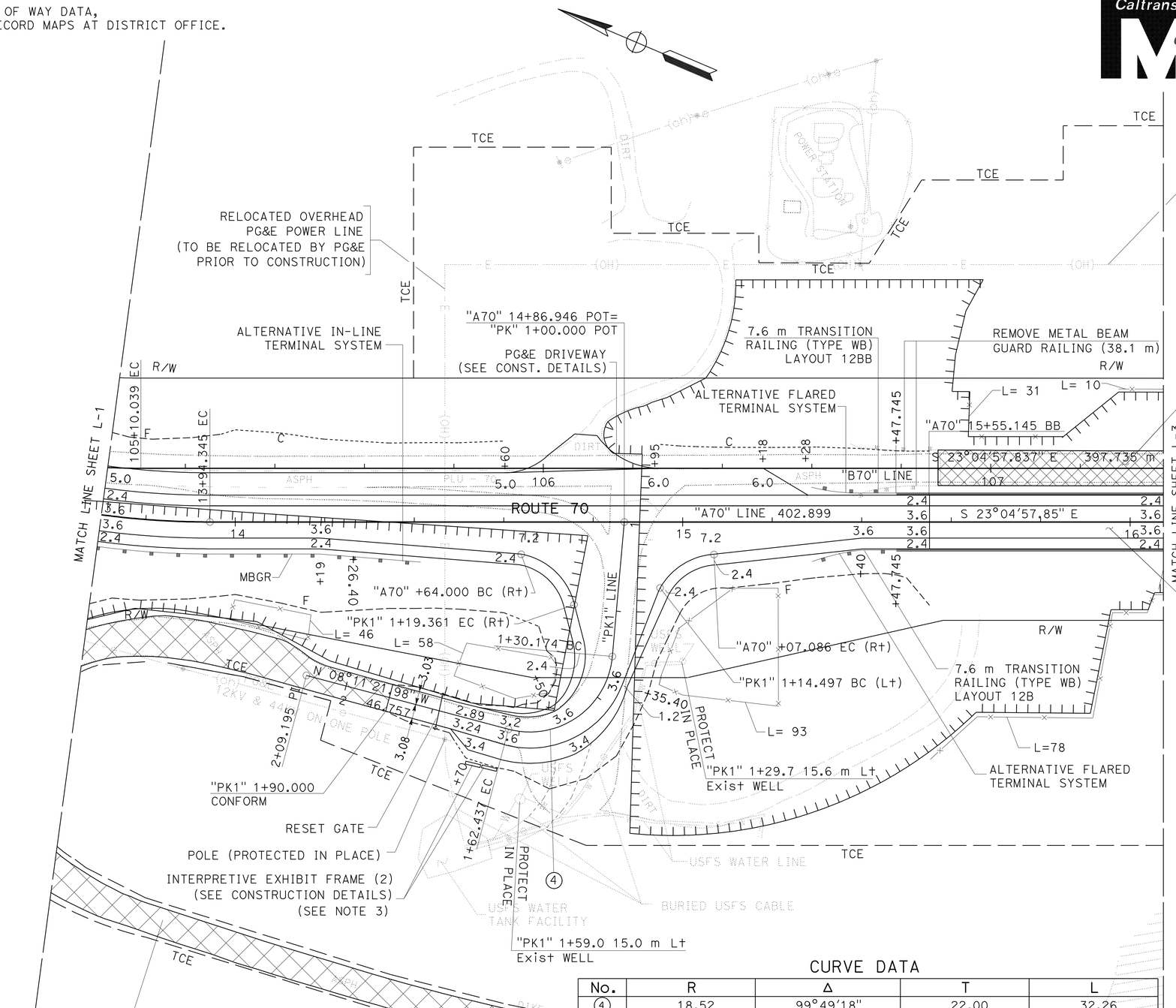

CURVE DATA

No.	R	Δ	T	L
4	18.52	99°49'18"	22.00	32.26

ALL DIMENSIONS ARE IN METERS
UNLESS OTHERWISE SHOWN

LAYOUT

SCALE 1:500

L-2

STATE OF CALIFORNIA - DEPARTMENT OF TRANSPORTATION
NORTH REGION
OFFICE OF DESIGN, WEST
DESIGN BRANCH S7

Caltrans

FUNCTIONAL SUPERVISOR: CYRUS HUI
CALCULATED-DESIGNED BY: DAVINDER MINHAS
CHECKED BY: CYRUS HUI
REVISED BY
DATE REVISED

LAST REVISION 00-00-00
DATE PLOTTED => 10-NOV-2009
TIME PLOTTED => 07:04

Dist	COUNTY	ROUTE	KILOMETER POST TOTAL PROJECT	SHEET No.	TOTAL SHEETS
02	Plu	70	56.5/57.2	11	149

Davinder Minhas 7-21-09
REGISTERED CIVIL ENGINEER DATE

11-2-09
PLANS APPROVAL DATE

REGISTERED PROFESSIONAL ENGINEER DAVINDER MINHAS No. 70022 Exp. 9-30-10 CIVIL STATE OF CALIFORNIA

THE STATE OF CALIFORNIA OR ITS OFFICERS OR AGENTS SHALL NOT BE RESPONSIBLE FOR THE ACCURACY OR COMPLETENESS OF ELECTRONIC COPIES OF THIS PLAN SHEET.

Caltrans Metric

NOTE: FOR COMPLETE RIGHT OF WAY AND ACCURATE ACCESS DATA, SEE RIGHT OF WAY RECORD MAPS AT DISTRICT OFFICE.

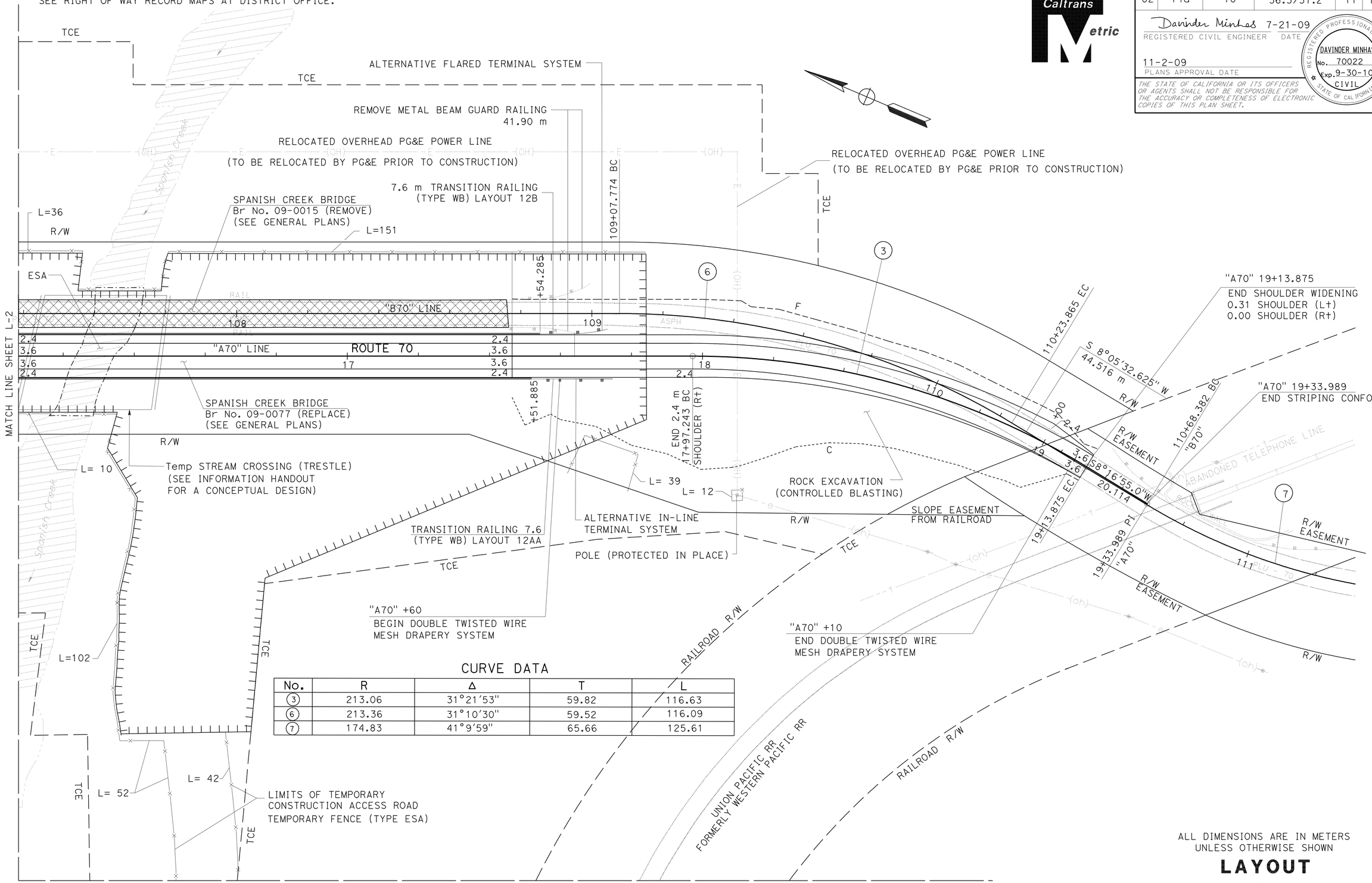

CURVE DATA

No.	R	Δ	T	L
3	213.06	31°21'53"	59.82	116.63
6	213.36	31°10'30"	59.52	116.09
7	174.83	41°9'59"	65.66	125.61

ALL DIMENSIONS ARE IN METERS UNLESS OTHERWISE SHOWN

LAYOUT

SCALE 1:500

L-3

DAVINDER MINHAS — CYRUS HUI — CYRUS HUI

REVISED BY — DATE REVISED — CALCULATED-DESIGNED BY — CHECKED BY — FUNCTIONAL SUPERVISOR

STATE OF CALIFORNIA - DEPARTMENT OF TRANSPORTATION
NORTH REGION
OFFICE OF DESIGN, WEST
DESIGN BRANCH S7

LAST REVISION 00-00-00 — DATE PLOTTED => 10-NOV-2009 — TIME PLOTTED => 07:04

Dist	COUNTY	ROUTE	KILOMETER POST TOTAL PROJECT	SHEET No.	TOTAL SHEETS
02	Plu	70	56.5/57.2	12	149

Davinder Minhas 7-21-09
REGISTERED CIVIL ENGINEER DATE

11-2-09
PLANS APPROVAL DATE

REGISTERED PROFESSIONAL ENGINEER DAVINDER MINHAS No. 70022 Exp. 9-30-10 CIVIL STATE OF CALIFORNIA

THE STATE OF CALIFORNIA OR ITS OFFICERS OR AGENTS SHALL NOT BE RESPONSIBLE FOR THE ACCURACY OR COMPLETENESS OF ELECTRONIC COPIES OF THIS PLAN SHEET.

Caltrans Metric

NOTES:
1. FOR COMPLETE RIGHT OF WAY AND ACCURATE ACCESS DATA, SEE RIGHT OF WAY RECORD MAPS AT DISTRICT OFFICE.
2. CLEAR & GRUB THIS AREA TO FACILITATE ACCESS TO WORK.

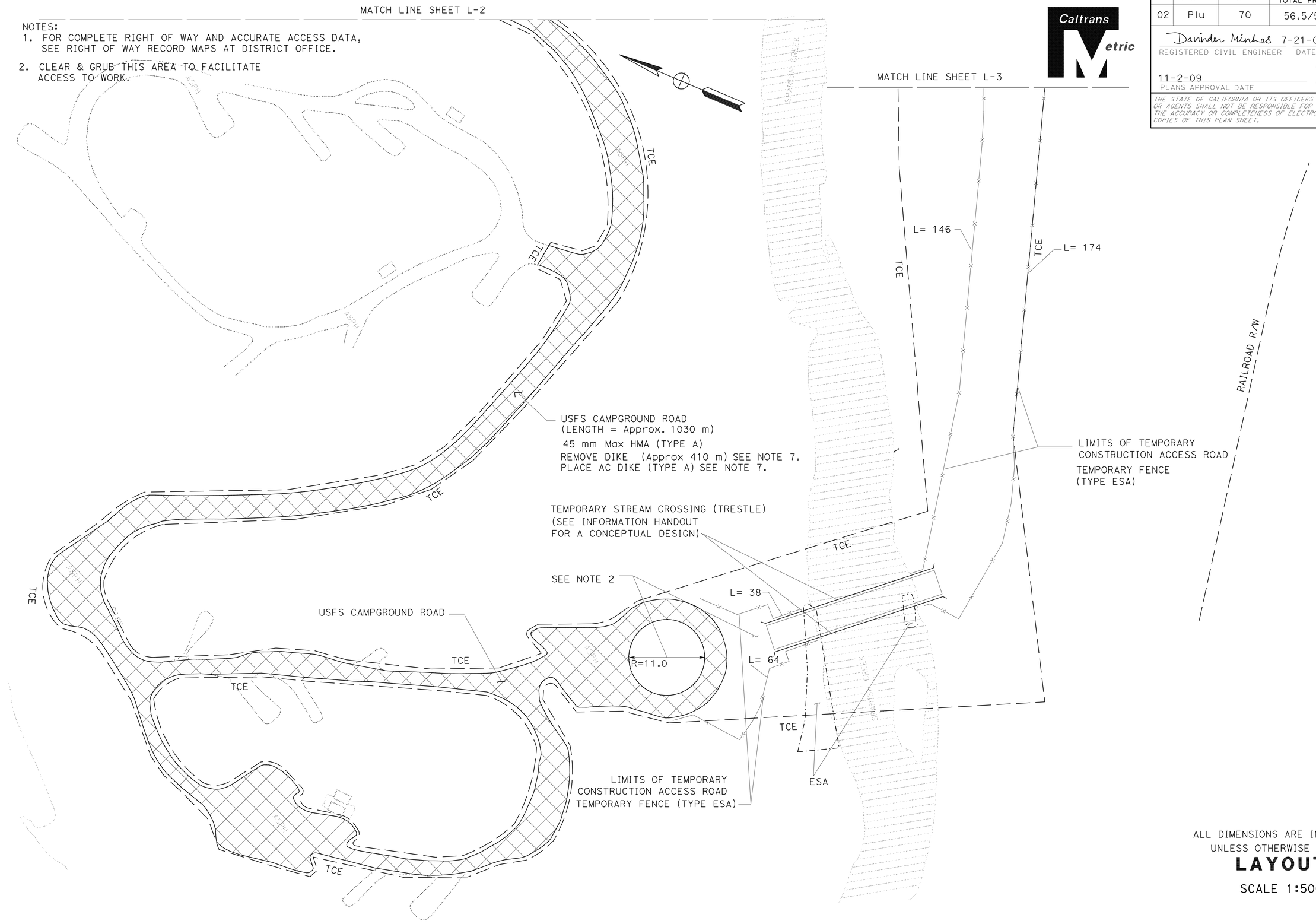

ALL DIMENSIONS ARE IN METERS
UNLESS OTHERWISE SHOWN

LAYOUT

SCALE 1:500

L-4

STATE OF CALIFORNIA - DEPARTMENT OF TRANSPORTATION
NORTH REGION
OFFICE OF DESIGN, WEST
DESIGN BRANCH S7

Caltrans

FUNCTIONAL SUPERVISOR: CYRUS HUI
CALCULATED-DESIGNED BY: DAVINDER MINHAS
CHECKED BY: CYRUS HUI
REVISED BY
DATE REVISED

LAST REVISION 00-00-00
DATE PLOTTED => 12-NOV-2009
TIME PLOTTED => 09:06

Dist	COUNTY	ROUTE	KILOMETER POST TOTAL PROJECT	SHEET No.	TOTAL SHEETS
02	Plu	70	56.5/57.2	13	149

Davinder Minhas 7-21-09
REGISTERED CIVIL ENGINEER DATE

11-2-09
PLANS APPROVAL DATE

REGISTERED PROFESSIONAL ENGINEER
DAVINDER MINHAS
No. 70022
Exp. 9-30-10
CIVIL
STATE OF CALIFORNIA

THE STATE OF CALIFORNIA OR ITS OFFICERS OR AGENTS SHALL NOT BE RESPONSIBLE FOR THE ACCURACY OR COMPLETENESS OF ELECTRONIC COPIES OF THIS PLAN SHEET.

Caltrans Metric

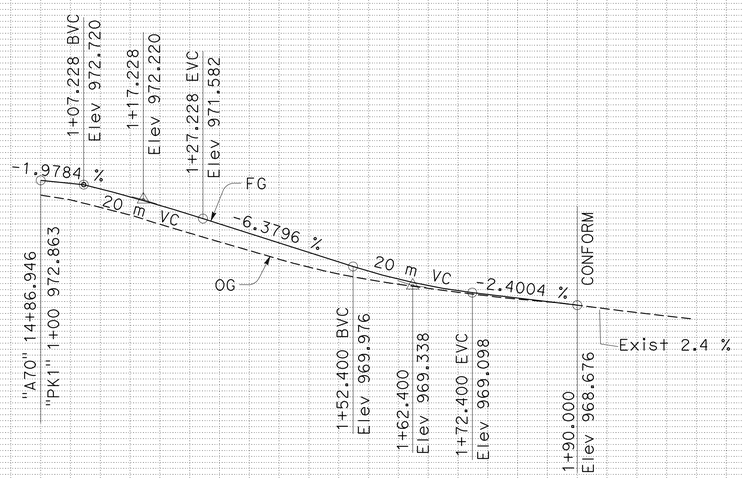

CAMPGROUND ROAD
PROFILE
"PK1" LINE

ALL DIMENSIONS ARE IN METERS
UNLESS OTHERWISE SHOWN

PROFILE

SCALE Horiz: 1:500
Vert: 1:100

P-1

Station		1+00	1+20	1+40	1+60	1+80	2+00	2+20
m^3 Exc	90				90			
m^3 Emb	830	810			20			

DAVINDER MINHAS
CYRUS HUI
REVISED BY
DATE REVISED
CALCULATED-DESIGNED BY
CHECKED BY
FUNCTIONAL SUPERVISOR
CYRUS HUI

STATE OF CALIFORNIA - DEPARTMENT OF TRANSPORTATION
NORTH REGION
OFFICE OF DESIGN, WEST
DESIGN BRANCH S7
Caltrans

LAST REVISION 00-00-00
DATE PLOTTED => 10-NOV-2009
TIME PLOTTED => 07:05

Dist	COUNTY	ROUTE	KILOMETER POST TOTAL PROJECT	SHEET No.	TOTAL SHEETS
02	Plu	70	56.5/57.2	14	149

Davinder Minhas 7-21-09
REGISTERED CIVIL ENGINEER DATE

11-2-09
PLANS APPROVAL DATE

REGISTERED PROFESSIONAL ENGINEER
DAVINDER MINHAS
No. 70022
Exp. 9-30-10
CIVIL
STATE OF CALIFORNIA

THE STATE OF CALIFORNIA OR ITS OFFICERS OR AGENTS SHALL NOT BE RESPONSIBLE FOR THE ACCURACY OR COMPLETENESS OF ELECTRONIC COPIES OF THIS PLAN SHEET.

Caltrans Metric

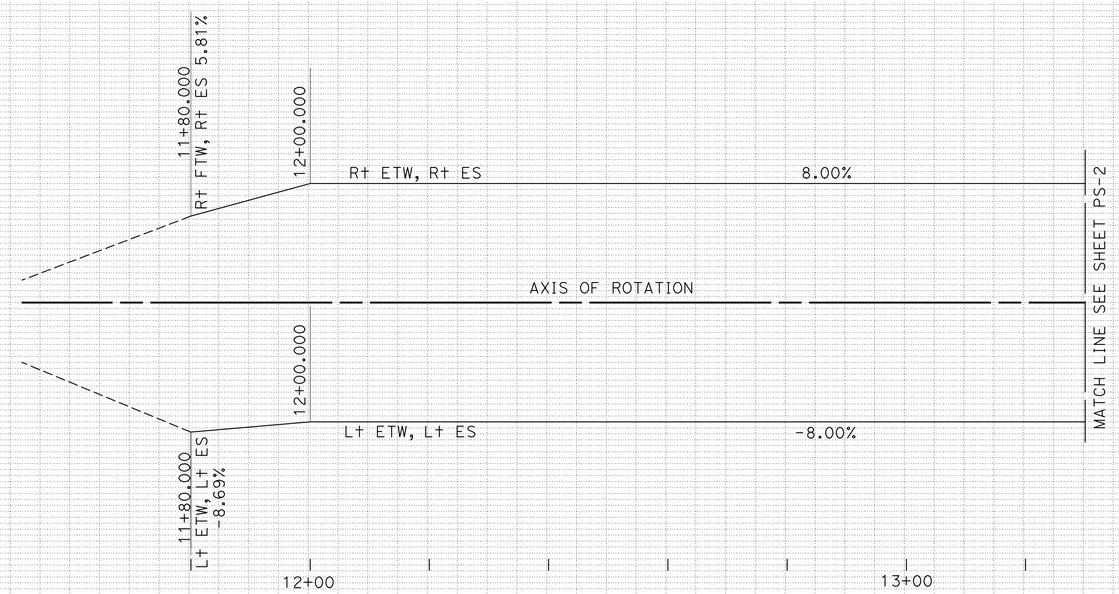

"A70" LINE
SUPERELEVATION
SCALE Horiz: 1:500

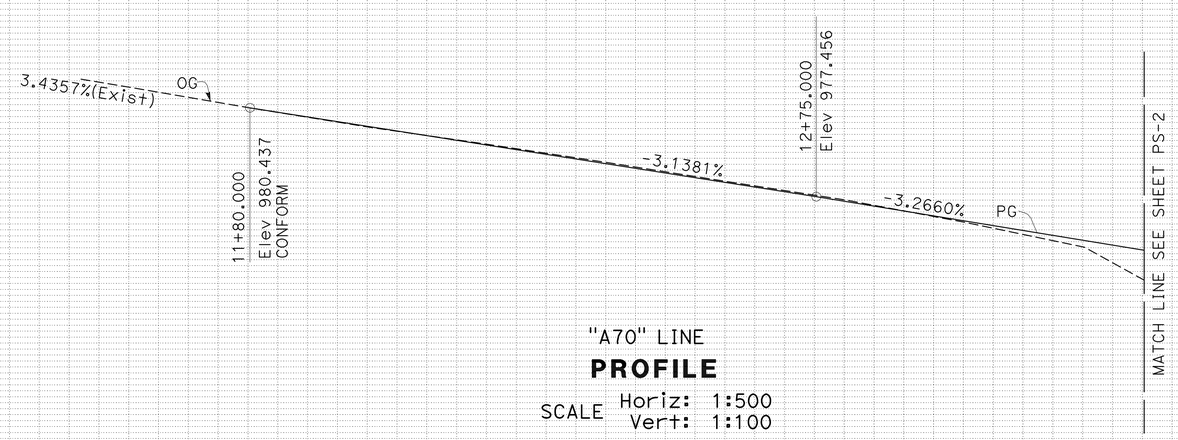

"A70" LINE
PROFILE
SCALE Horiz: 1:500
Vert: 1:100

ALL DIMENSIONS ARE IN METERS
UNLESS OTHERWISE SHOWN

PROFILE AND SUPERELEVATION DIAGRAM

SCALE AS SHOWN

PS-1

Station	12+00	13+00
m³ Exc	1000	1000
m³ Emb	690	690

8% 4% 0 -4% -8%

984 982 980 978 976 974 972

DAVINDER MINHAS
CYRUS HUI
REVISED BY
DATE REVISED
CALCULATED-DESIGNED BY
CHECKED BY
FUNCTIONAL SUPERVISOR
CYRUS HUI

STATE OF CALIFORNIA - DEPARTMENT OF TRANSPORTATION
NORTH REGION
OFFICE OF DESIGN, WEST
DESIGN BRANCH S7
Caltrans

LAST REVISION 00-00-00
DATE PLOTTED => 10-NOV-2009
TIME PLOTTED => 07:05

Dist	COUNTY	ROUTE	KILOMETER POST TOTAL PROJECT	SHEET No.	TOTAL SHEETS
02	Plu	70	56.5/57.2	15	149

Davinder Minhas 7-21-09
REGISTERED CIVIL ENGINEER DATE

11-2-09
PLANS APPROVAL DATE

REGISTERED PROFESSIONAL ENGINEER DAVINDER MINHAS No. 70022 Exp. 9-30-10 CIVIL STATE OF CALIFORNIA

THE STATE OF CALIFORNIA OR ITS OFFICERS OR AGENTS SHALL NOT BE RESPONSIBLE FOR THE ACCURACY OR COMPLETENESS OF ELECTRONIC COPIES OF THIS PLAN SHEET.

Caltrans Metric

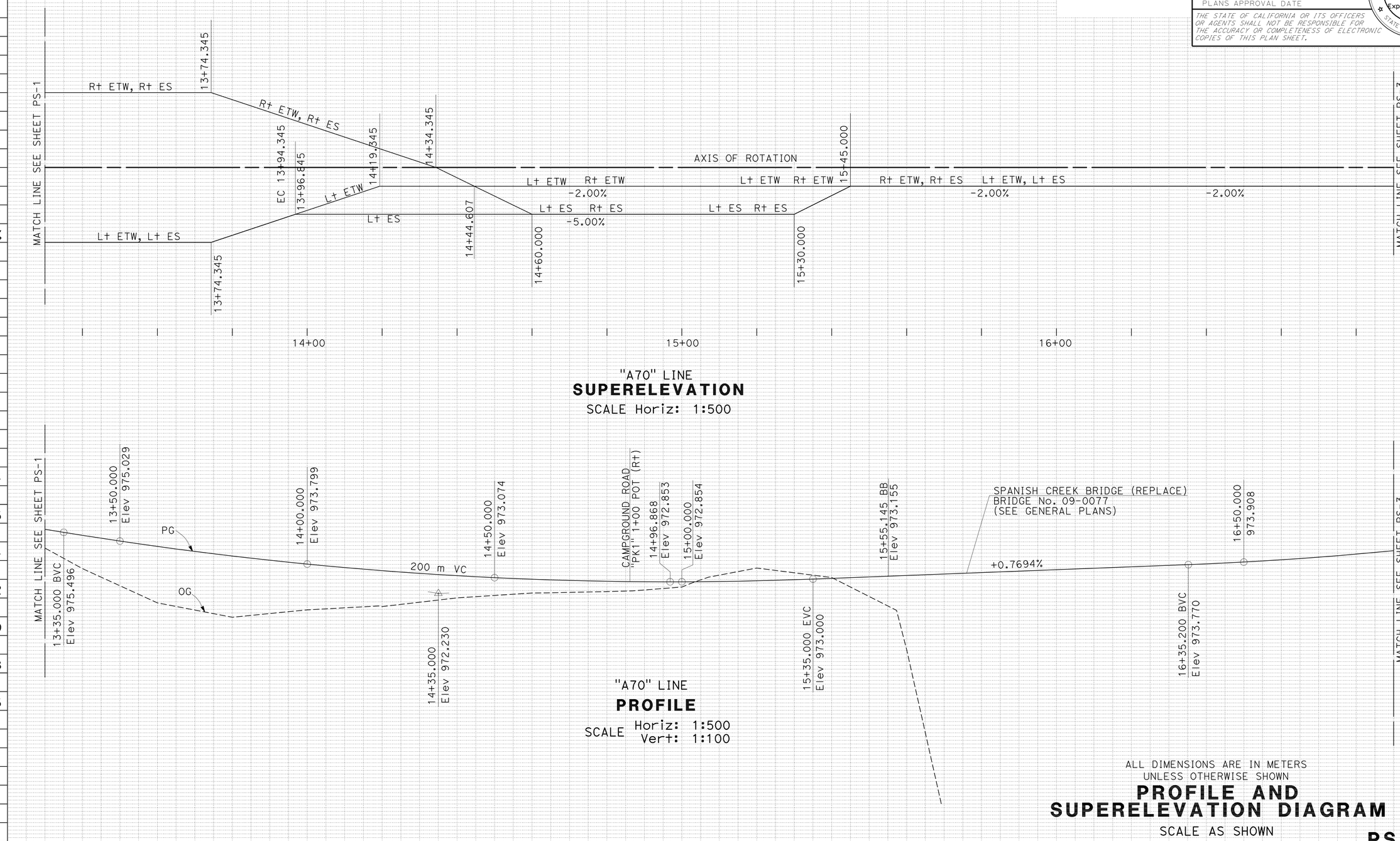

ALL DIMENSIONS ARE IN METERS
UNLESS OTHERWISE SHOWN

PROFILE AND SUPERELEVATION DIAGRAM

SCALE AS SHOWN

PS-2

Station	14+00	15+00	16+00
m^3 Exc	1080		
m^3 Emb	7720		

REVISED BY	DATE REVISED
DAVINDER MINHAS	CYRUS HUI

CALCULATED-DESIGNED BY
CHECKED BY

FUNCTIONAL SUPERVISOR: CYRUS HUI

STATE OF CALIFORNIA - DEPARTMENT OF TRANSPORTATION
NORTH REGION
OFFICE OF DESIGN, WEST
DESIGN BRANCH S7

Caltrans

LAST REVISION 00-00-00
DATE PLOTTED => 10-NOV-2009
TIME PLOTTED => 07:05

Dist	COUNTY	ROUTE	KILOMETER POST TOTAL PROJECT	SHEET No.	TOTAL SHEETS
02	Plu	70	56.5/57.2	16	149

Davinder Minhas 7-21-09
REGISTERED CIVIL ENGINEER DATE

11-2-09
PLANS APPROVAL DATE

REGISTERED PROFESSIONAL ENGINEER DAVINDER MINHAS No. 70022 Exp. 9-30-10 CIVIL STATE OF CALIFORNIA

THE STATE OF CALIFORNIA OR ITS OFFICERS OR AGENTS SHALL NOT BE RESPONSIBLE FOR THE ACCURACY OR COMPLETENESS OF ELECTRONIC COPIES OF THIS PLAN SHEET.

Caltrans Metric

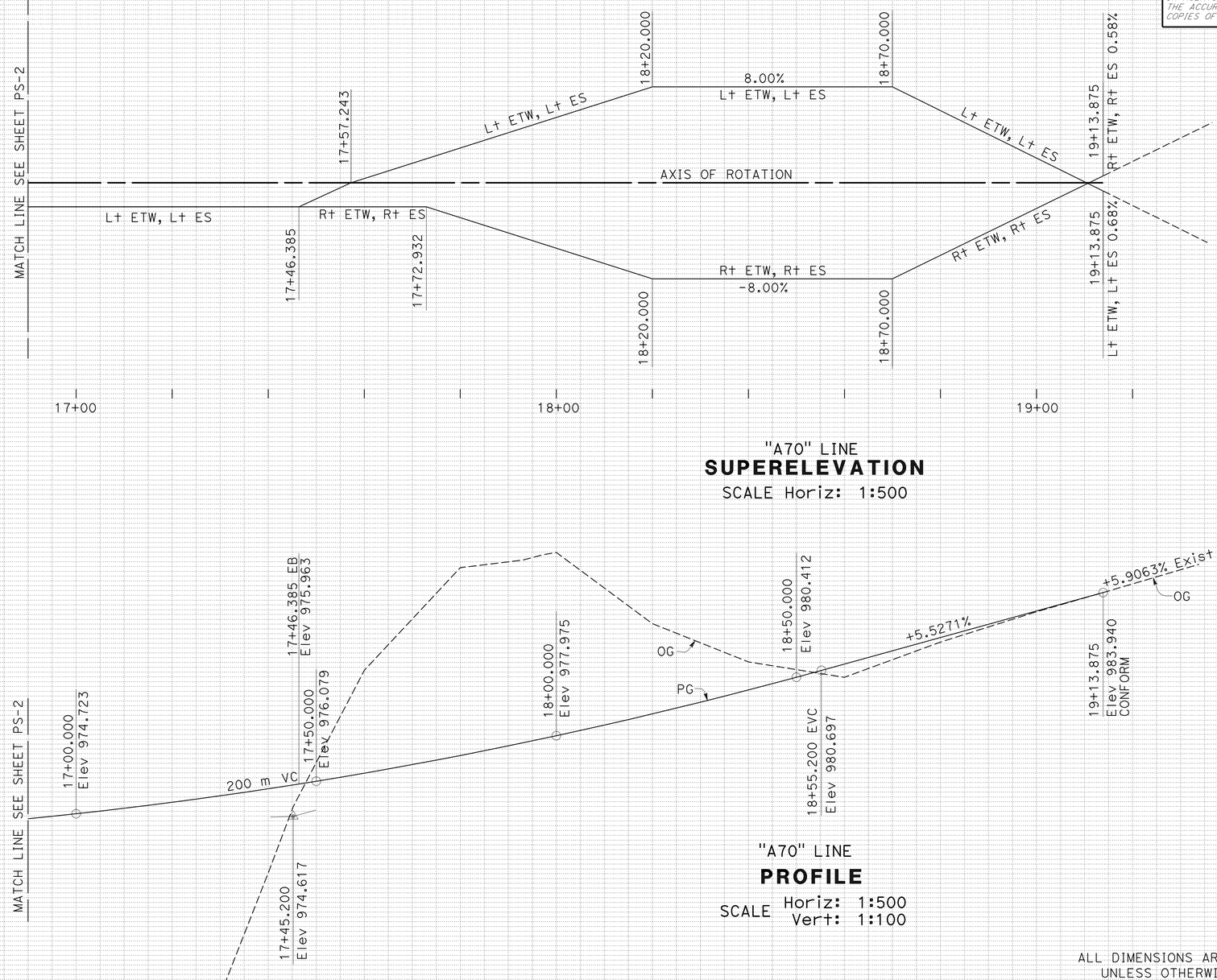

ALL DIMENSIONS ARE IN METERS
UNLESS OTHERWISE SHOWN

PROFILE AND SUPERELEVATION DIAGRAM

SCALE AS SHOWN

PS-3

Station	17+00	18+00	19+00
m^3 Exc	21 000		
m^3 Emb	742		

REVISED BY	DATE REVISED

DAVINDER MINHAS — CALCULATED-DESIGNED BY
CYRUS HUI — CHECKED BY
CYRUS HUI — FUNCTIONAL SUPERVISOR

STATE OF CALIFORNIA - DEPARTMENT OF TRANSPORTATION
NORTH REGION
OFFICE OF DESIGN, WEST
DESIGN BRANCH S7
Caltrans

LAST REVISION DATE PLOTTED => 10-NOV-2009
TIME PLOTTED => 07:05
00-00-00

Dist	COUNTY	ROUTE	KILOMETER POST TOTAL PROJECT	SHEET No.	TOTAL SHEETS
02	Plu	70	56.5/57.2	17	149

Davinder Minhas 7-21-09
REGISTERED CIVIL ENGINEER DATE

11-2-09
PLANS APPROVAL DATE

REGISTERED PROFESSIONAL ENGINEER
DAVINDER MINHAS
No. 70022
Exp. 9-30-10
CIVIL
STATE OF CALIFORNIA

THE STATE OF CALIFORNIA OR ITS OFFICERS OR AGENTS SHALL NOT BE RESPONSIBLE FOR THE ACCURACY OR COMPLETENESS OF ELECTRONIC COPIES OF THIS PLAN SHEET.

Caltrans Metric

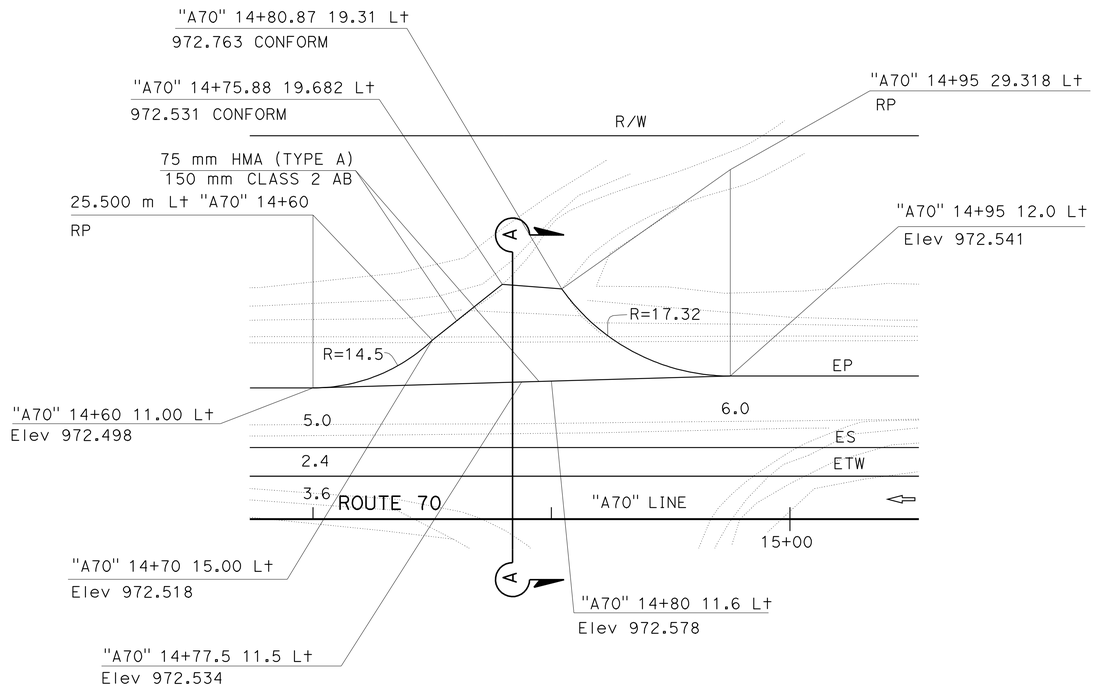

"A70" 14+60 TO 14+95 Lt

PG&E DRIVEWAY

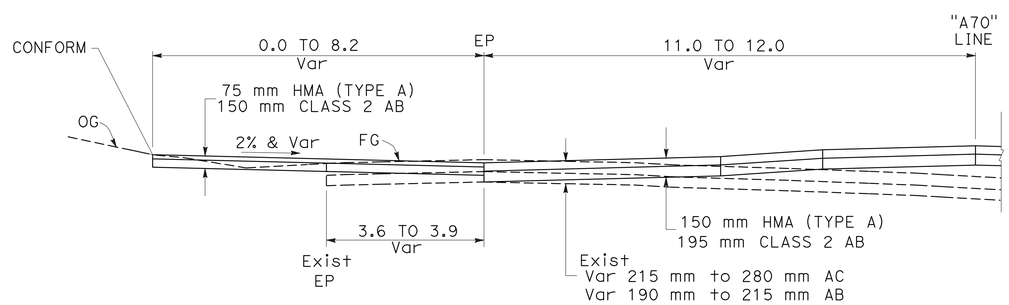

SECTION A-A

ALL DIMENSIONS ARE IN METERS
UNLESS OTHERWISE SHOWN

CONSTRUCTION DETAILS

NO SCALE

C-1

STATE OF CALIFORNIA - DEPARTMENT OF TRANSPORTATION
NORTH REGION
OFFICE OF DESIGN, WEST
DESIGN BRANCH S7

Caltrans

FUNCTIONAL SUPERVISOR: CYRUS HUI

CALCULATED-DESIGNED BY: DAVINDER MINHAS
CHECKED BY: CYRUS HUI

REVISED BY | DATE REVISED

LAST REVISION 00-00-00 | DATE PLOTTED => 10-NOV-2009 | TIME PLOTTED => 07:05

Dist	COUNTY	ROUTE	KILOMETER POST TOTAL PROJECT	SHEET No.	TOTAL SHEETS
02	Plu	70	56.5/57.2	18	149

Davinder Minhas 7-21-09
REGISTERED CIVIL ENGINEER DATE

11-2-09
PLANS APPROVAL DATE

REGISTERED PROFESSIONAL ENGINEER DAVINDER MINHAS No. 70022 Exp. 9-30-10 CIVIL STATE OF CALIFORNIA

THE STATE OF CALIFORNIA OR ITS OFFICERS OR AGENTS SHALL NOT BE RESPONSIBLE FOR THE ACCURACY OR COMPLETENESS OF ELECTRONIC COPIES OF THIS PLAN SHEET.

Caltrans Metric

CURVE DATA

No.	R	Δ	T	L
1	15.000	65°50'51"	9.713	17.239
2	15.000	59°02'03"	8.492	15.455

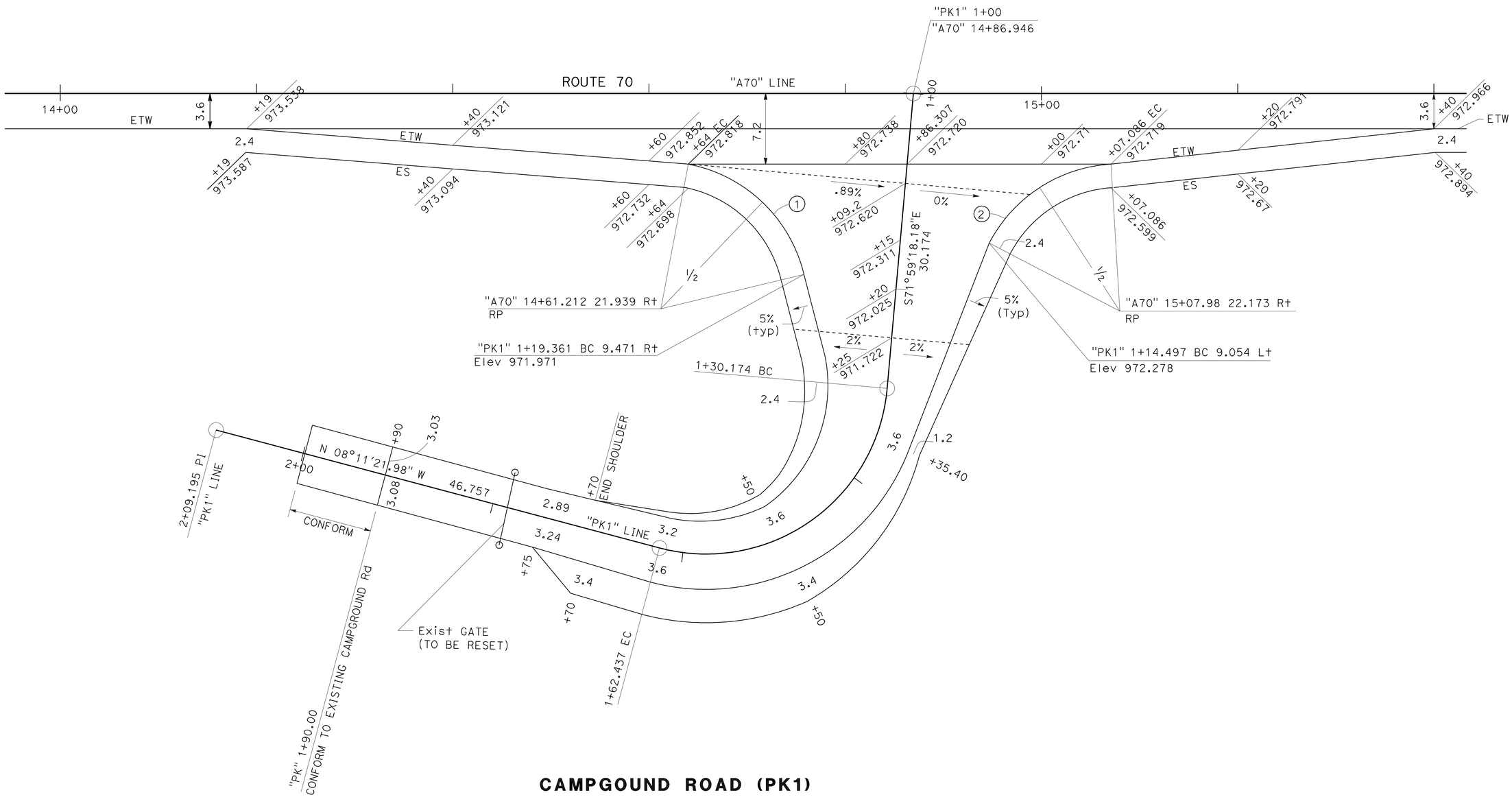

CAMPGOUND ROAD (PK1)

ALL DIMENSIONS ARE IN METERS
UNLESS OTHERWISE SHOWN

CONSTRUCTION DETAILS

NO SCALE

C-2

STATE OF CALIFORNIA - DEPARTMENT OF TRANSPORTATION
NORTH REGION
OFFICE OF DESIGN, WEST
DESIGN BRANCH S7

Caltrans

FUNCTIONAL SUPERVISOR: CYRUS HUI
CALCULATED-DESIGNED BY: DAVINDER MINHAS
CHECKED BY: CYRUS HUI
REVISED BY
DATE REVISED

LAST REVISION 00-00-00
DATE PLOTTED => 10-NOV-2009
TIME PLOTTED => 07:06

Dist	COUNTY	ROUTE	KILOMETER POST TOTAL PROJECT	SHEET No.	TOTAL SHEETS
02	Plu	70	56.5/57.2	19	149

Davinder Minhas 7-21-09
REGISTERED CIVIL ENGINEER DATE

11-2-09
PLANS APPROVAL DATE

REGISTERED PROFESSIONAL ENGINEER DAVINDER MINHAS No. 70022 Exp. 9-30-10 CIVIL STATE OF CALIFORNIA

THE STATE OF CALIFORNIA OR ITS OFFICERS OR AGENTS SHALL NOT BE RESPONSIBLE FOR THE ACCURACY OR COMPLETENESS OF ELECTRONIC COPIES OF THIS PLAN SHEET.

Caltrans Metric

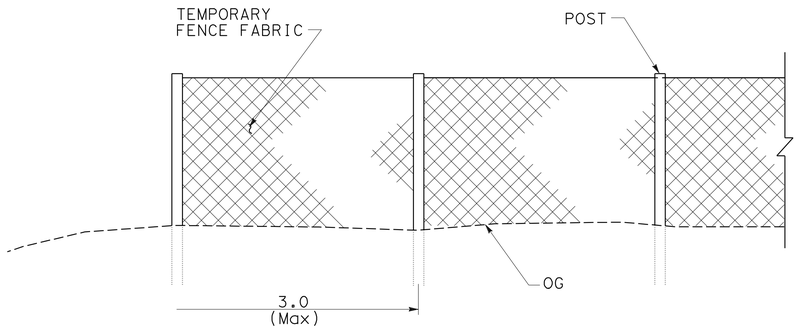

TEMPORARY FENCE (TYPE ESA)

SEE LAYOUT PLANS FOR LOCATIONS

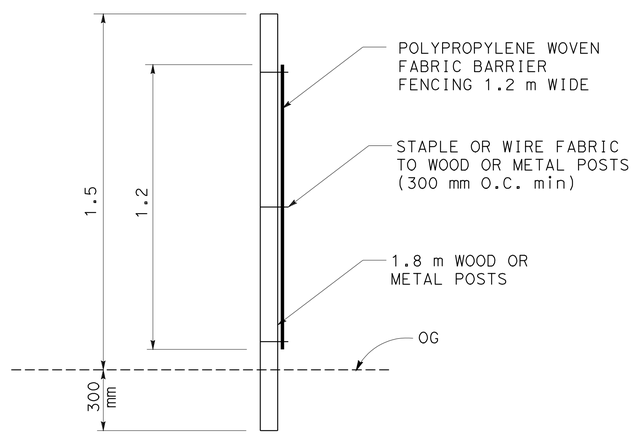

SECTION

TEMPORARY FENCE (TYPE ESA)

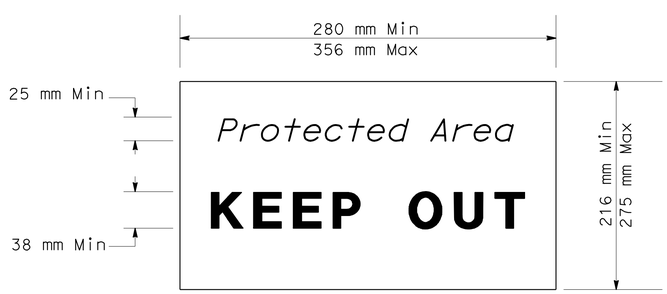

ESA SIGN DETAIL
COLOR TEXT=BLACK
COLOR BACKGROUND=ORANGE

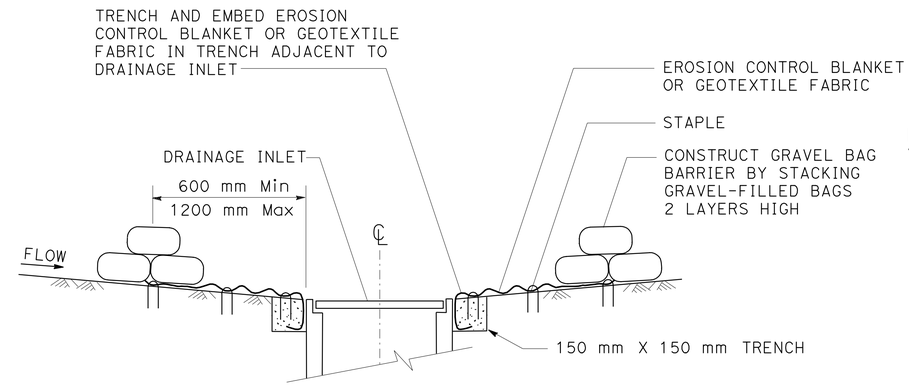

SECTION A-A

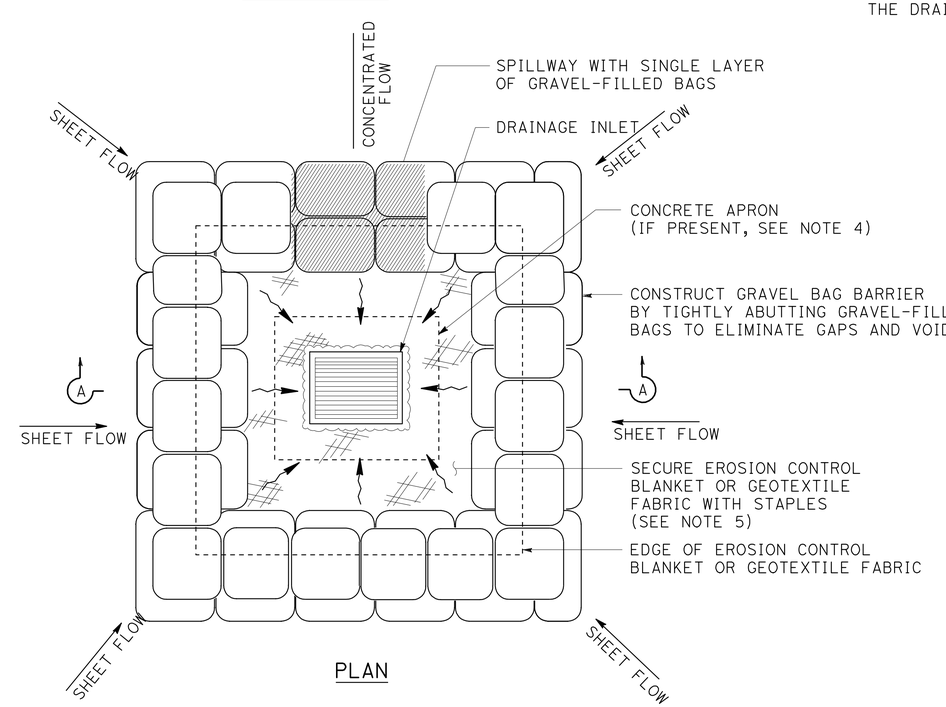

PLAN

TEMPORARY DRAINAGE INLET PROTECTION (TYPE 3B) (GRAVEL BAG BARRIER)

NOTES:

1. PLACE SAFETY CONES ADJACENT TO DRAINAGE INLET PROTECTION.
2. DIMENSIONS MAY VARY TO FIT FIELD CONDITIONS.
3. INSTALL A MINIMUM OF 3 GRAVEL BAG BARRIERS UPSTREAM OF EACH DRAINAGE INLET TO BE PROTECTED.
4. POSITION EROSION CONTROL BLANKET OR GEOTEXTILE FABRIC AT EDGE OF CONCRETE APRON AND SECURE IN TRENCH.
5. EROSION CONTROL BLANKET/GEOTEXTILE FABRIC IS NOT REQUIRED IF THE AREA ADJACENT TO THE DRAINAGE INLET IS VEGETATED OR PAVED.

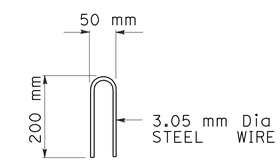

STAPLE DETAIL

ALL DIMENSIONS ARE IN METERS UNLESS OTHERWISE SHOWN

CONSTRUCTION DETAILS

NO SCALE

C-3

STATE OF CALIFORNIA - DEPARTMENT OF TRANSPORTATION
NORTH REGION
OFFICE OF DESIGN, WEST
DESIGN BRANCH S7
Caltrans

FUNCTIONAL SUPERVISOR: CYRUS HUI
CALCULATED-DESIGNED BY: DAVINDER MINHAS
CHECKED BY: CYRUS HUI
REVISED BY
DATE REVISED

LAST REVISION 00-00-00
DATE PLOTTED => 10-NOV-2009
TIME PLOTTED => 07:06

Dist	COUNTY	ROUTE	KILOMETER POST TOTAL PROJECT	SHEET No.	TOTAL SHEETS
02	Plu	70	56.5/57.2	20	149

Davinder Minhas 7-21-09
REGISTERED CIVIL ENGINEER DATE

11-2-09
PLANS APPROVAL DATE

REGISTERED PROFESSIONAL ENGINEER
DAVINDER MINHAS
No. 70022
Exp. 9-30-10
CIVIL
STATE OF CALIFORNIA

THE STATE OF CALIFORNIA OR ITS OFFICERS OR AGENTS SHALL NOT BE RESPONSIBLE FOR THE ACCURACY OR COMPLETENESS OF ELECTRONIC COPIES OF THIS PLAN SHEET.

Caltrans Metric

NOTE:
1. INTERPRETIVE EXHIBIT FRAME IS STATE FURNISHED.

LEGEND

CONCRETE

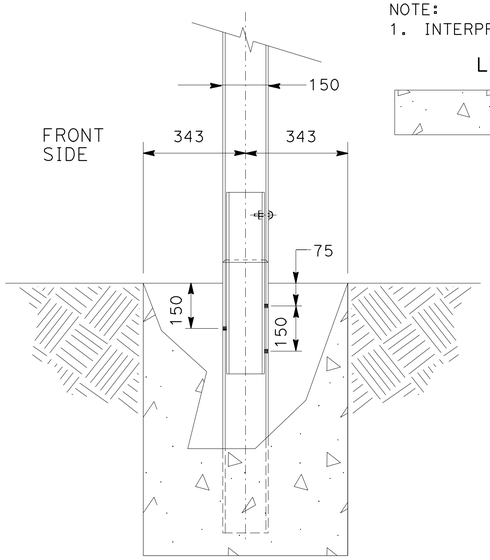

SECTION A-A

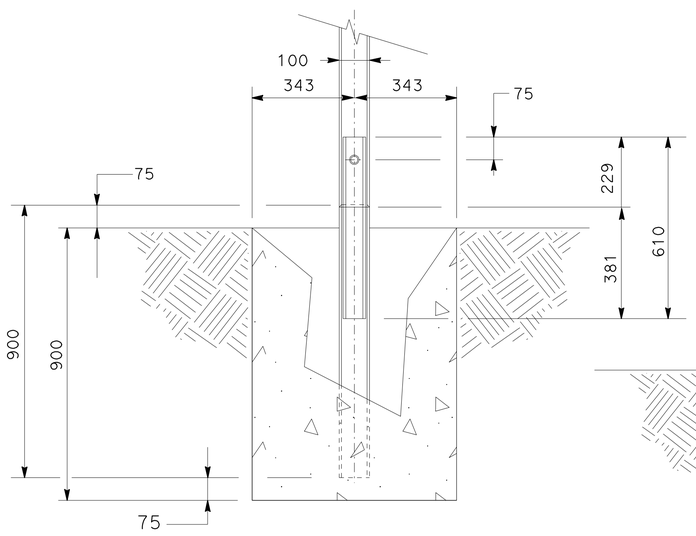

SECTION B-B

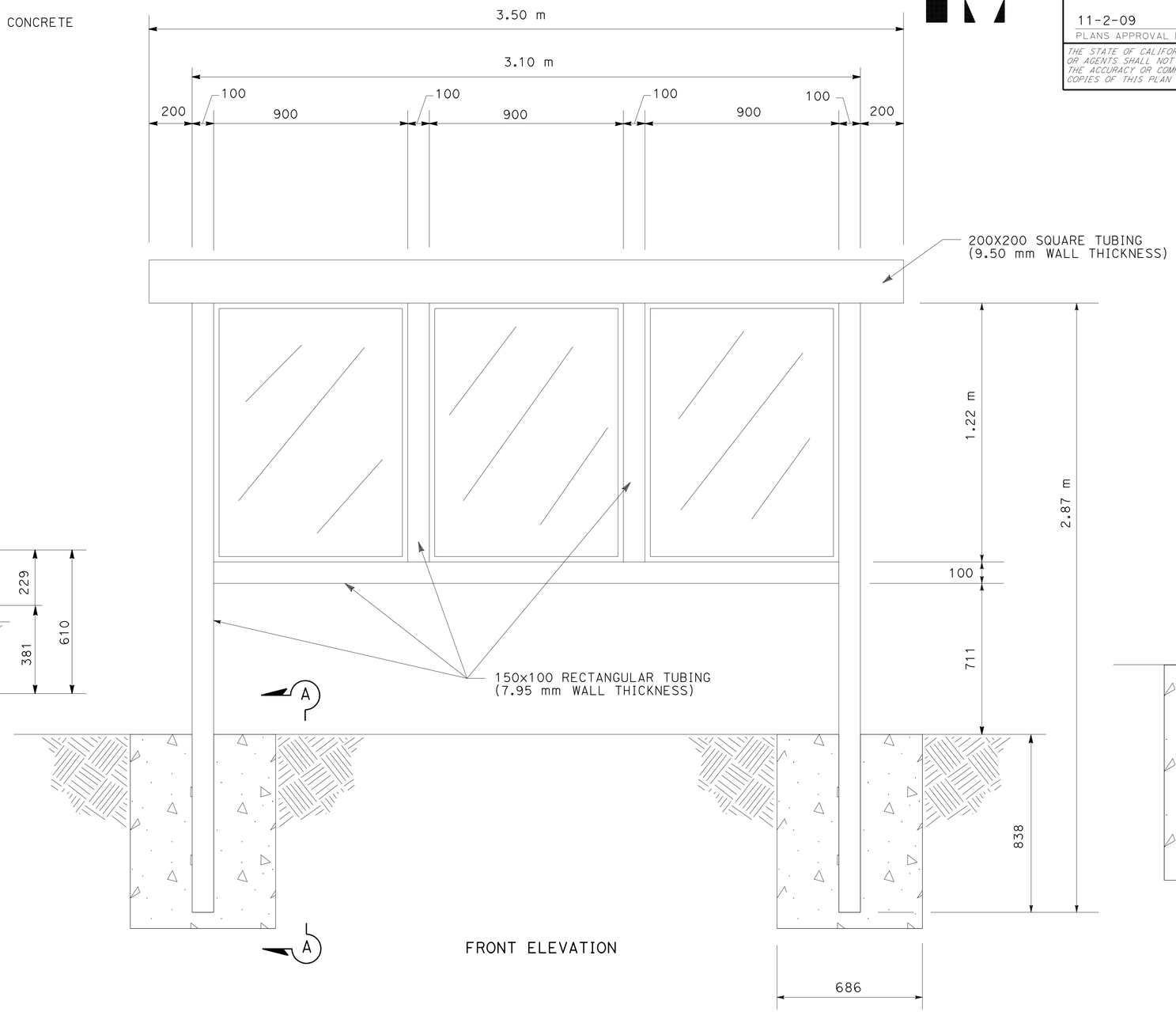

FRONT ELEVATION

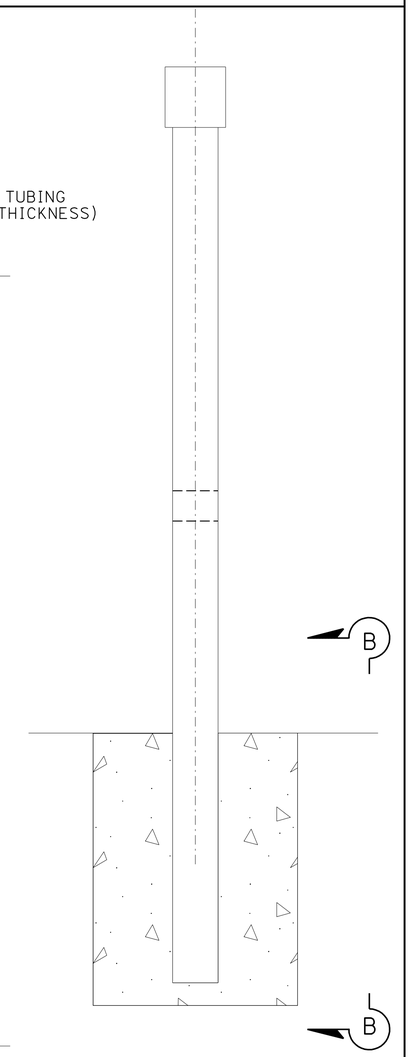

SIDE VIEW

INTERPRETIVE EXHIBIT FRAME INSTALATION DETAIL

ALL DIMENSIONS ARE IN MILLIMETERS
UNLESS OTHERWISE SHOWN

CONSTRUCTION DETAILS

NO SCALE

C-4

REVISED BY	DATE REVISED

DAVINDER MINHAS — CALCULATED-DESIGNED BY
CYRUS HUI — CHECKED BY
CYRUS HUI — FUNCTIONAL SUPERVISOR

STATE OF CALIFORNIA - DEPARTMENT OF TRANSPORTATION
NORTH REGION
OFFICE OF DESIGN, WEST
DESIGN BRANCH S7
Caltrans

LAST REVISION 00-00-00 | DATE PLOTTED => 10-NOV-2009 | TIME PLOTTED => 07:06

Dist	COUNTY	ROUTE	KILOMETER POST TOTAL PROJECT	SHEET No.	TOTAL SHEETS
02	Plu	70	56.5/57.2	21	149

Davinder Minhas 7-21-09
REGISTERED CIVIL ENGINEER DATE

11-2-09
PLANS APPROVAL DATE

REGISTERED PROFESSIONAL ENGINEER DAVINDER MINHAS No. 70022 Exp. 9-30-10 CIVIL STATE OF CALIFORNIA

THE STATE OF CALIFORNIA OR ITS OFFICERS OR AGENTS SHALL NOT BE RESPONSIBLE FOR THE ACCURACY OR COMPLETENESS OF ELECTRONIC COPIES OF THIS PLAN SHEET.

Caltrans Metric

NOTES:

1. USE A 57 mm Sq TUBE X 762 mm LONG, 4.5 mm THICK ANCHOR SLEEVE FOR 51 mm POSTS. USE A 76 mm Sq TUBE X 914 mm LONG, 4.5 mm THICK ANCHOR SLEEVE FOR 64 mm POSTS.
2. USE AN 8 mm CORNER BOLT OR TWO DRIVE RIVETS TO FASTEN ASSEMBLED SIGN AND POST INTO ANCHOR. INSTALL CORNER BOLT OR DRIVE RIVETS INTO THE SIDES FACING TRAFFIC.
3. REMOVE EXISTING AC OR PCC, DRIVE ANCHOR SLEEVE INTO SOIL AND RECAP WITH LIKE MATERIAL, MATCHING EXISTING THICKNESS.
4. 51 mm POSTS ARE TO BE 2.7 mm THICK, PERFORATIONS OF 11 mm IN DIAMETER ARE 25.4 mm ON CENTER ON ALL SIDES, LENGTHS ARE 3050 mm AND 3660 mm.
5. 64 mm POSTS ARE TO BE 3.4 mm THICK, PERFORATIONS OF 11 mm IN DIAMETER ARE 25.4 mm ON CENTER ON ALL SIDES, 64 mm POSTS ARE 3660 mm AND 4270 mm IN LENGTH.
6. FOR DETAILS NOT SHOWN, REFER TO THE STANDARD PLANS, RS1 AND RS2.
7. 64 mm POSTS SHALL BE USED IN SIDEWALK AND HIGH PEDESTRIAN USE PLACEMENTS.
8. ALL ANCHOR SLEEVES SHALL BE EMBEDDED IN PCC, EXCEPT FOR INSTALLATIONS IN PAVEMENTS OR SIDEWALKS, OR IN ROCKY SOIL CONDITIONS WHERE APPROVED BY THE ENGINEER.

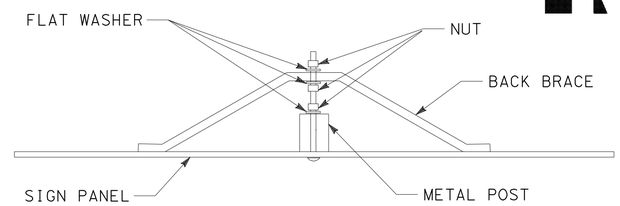

BACK BRACE MOUNTING DETAIL

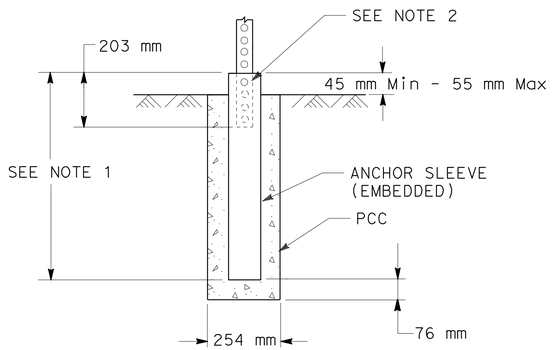

INSTALLATION IN SOIL (PCC)

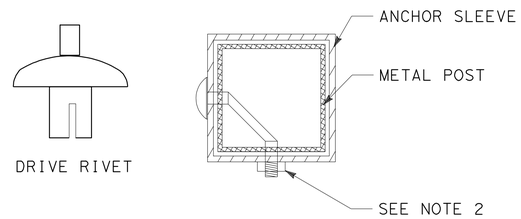

FASTENER DETAILS

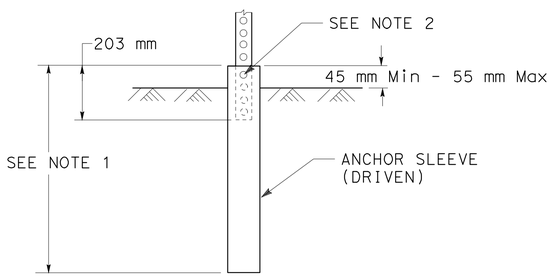

INSTALLATION IN SOIL

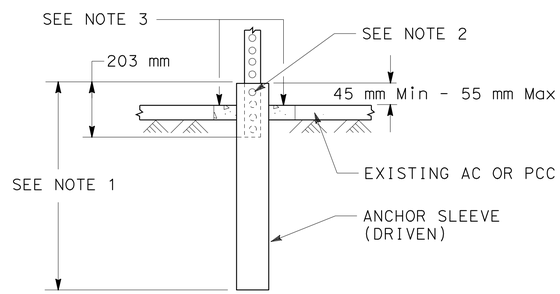

INSTALLATION IN EXISTING AC OR PCC

ROADSIDE SIGN (METAL POST) INSTALLATION DETAILS

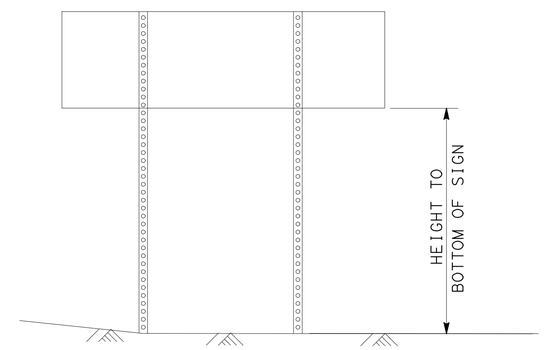

TWO POSTS INSTALLATION
(POST SIZE, SEE CHART BELOW)

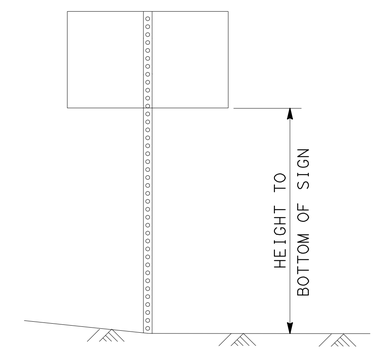

SINGLE POST INSTALLATION
(POST SIZE, SEE CHART BELOW)

Max Sq m OF SIGN PANEL(S)

POST SIZE mm	1520	1830	2130	2440	2740	3050
51	1.67	1.49	1.3	1.11	.93	.74
64	3.25	2.97	2.6	2.23	1.95	1.95

HEIGHT TO BOTTOM OF SIGN mm
113 KPH WIND SPEED

Max Sq m OF SIGN PANEL(S)

POST SIZE mm	1520	1830	2130	2440	2740	3050
51	.98	.93	.81	.69	.58	.46
64	1.5	1.5	1.5	1.5	1.1	1.1

HEIGHT TO BOTTOM OF SIGN mm
113 KPH WIND SPEED

METAL SIGN POST DETAIL

ROADSIDE SIGNS

ALL DIMENSIONS ARE IN METERS UNLESS OTHERWISE SHOWN

CONSTRUCTION DETAILS

NO SCALE

C-5

REVISED BY	DATE REVISED

DAVINDER MINHAS — CALCULATED-DESIGNED BY
CYRUS HUI — CHECKED BY
CYRUS HUI — FUNCTIONAL SUPERVISOR

STATE OF CALIFORNIA - DEPARTMENT OF TRANSPORTATION
NORTH REGION
OFFICE OF DESIGN, WEST
DESIGN BRANCH S7
Caltrans

LAST REVISION 00-00-00 | DATE PLOTTED => 10-NOV-2009 | TIME PLOTTED => 07:06

Dist	COUNTY	ROUTE	KILOMETER POST TOTAL PROJECT	SHEET No.	TOTAL SHEETS
02	Plu	70	56.5/57.2	22	149

CERTIFED ENGINEERING GEOLOGIST DATE

11-2-09
PLANS APPROVAL DATE

PROFESSIONAL GEOLOGIST JOHN SCOTT LEWIS NO. 2257 CERTIFIED ENGINEERING GEOLOGIST 08-09 STATE OF CALIFORNIA

THE STATE OF CALIFORNIA OR ITS OFFICERS OR AGENTS SHALL NOT BE RESPONSIBLE FOR THE ACCURACY OR COMPLETENESS OF ELECTRONIC COPIES OF THIS PLAN SHEET.

Caltrans Metric

NOTES:

1. FOR COMPLETE RIGHT OF WAY AND DATA, SEE RIGHT OF WAY RECORD MAPS AT DISTRICT OFFICE.
2. SEE ANCHOR DETAILS ON SHEETS C-7, C-9, AND C-10.
3. TREES/VEGETATION REMOVE TO BE DETERMIND BY THE ENGINEER.
4. WIRE MESH DRAPERY SYSTEM DIMENSIONS ARE APROXIMATE, EXACT LIMITS TO BE DETERMINED BY THE ENGINEER.
5. ANCHOR LOCATIONS ARE APROXIMATE, EXACT LOCATIONS TO BE DETERMINED BY THE ENGINEER.

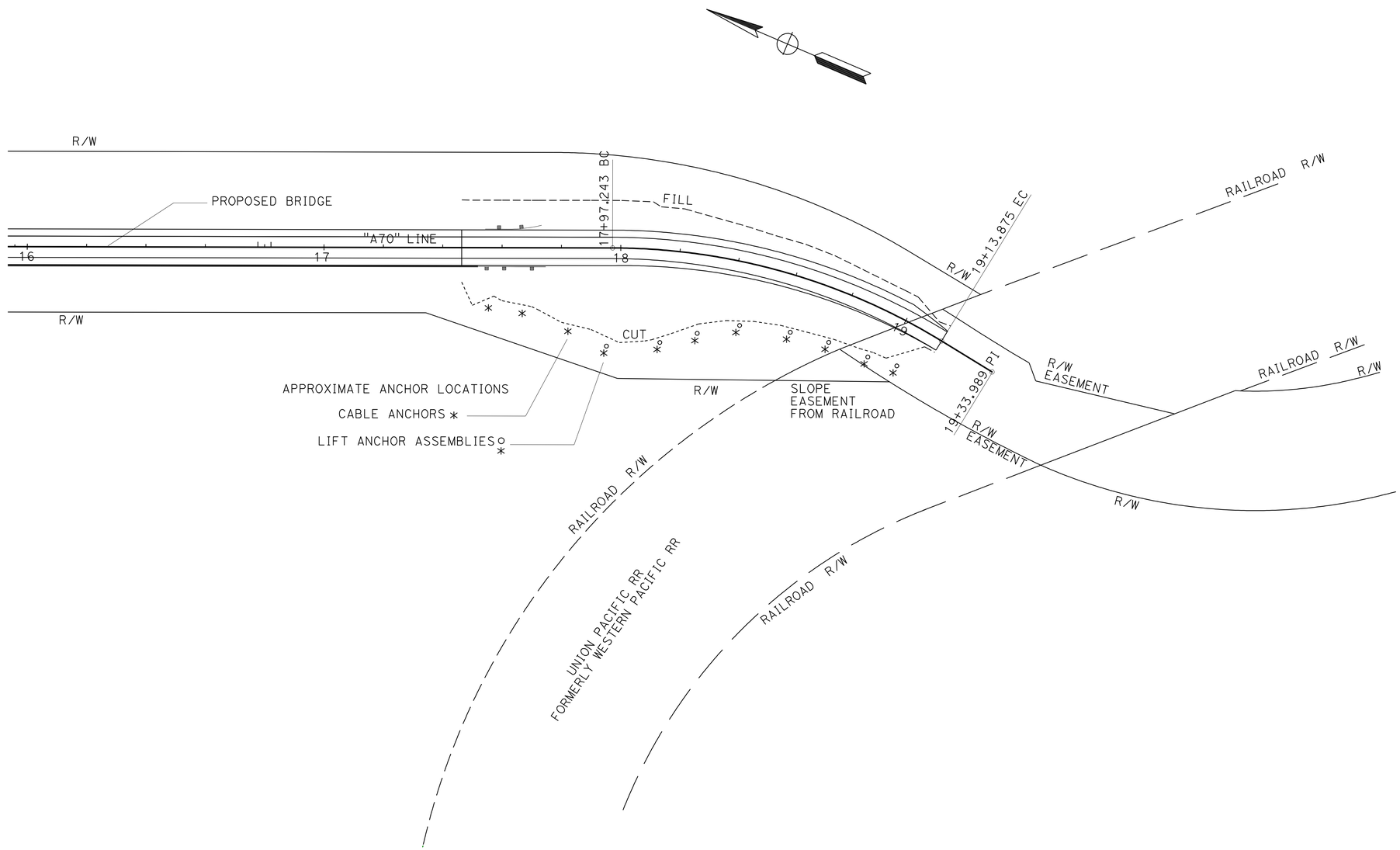

DOUBLE TWISTED WIRE MESH (DTWM) DRAPERY SYSTEM ANCHOR LAYOUT

ALL DIMENSIONS ARE IN METERS
UNLESS OTHERWISE SHOWN

CONSTRUCTION DETAILS

NO SCALE

C-6

REVISED BY	DATE REVISED

CALCULATED-DESIGNED BY: SCOTT LEWIS
CHECKED BY: DAVINDER MINHAS

FUNCTIONAL SUPERVISOR: CYRUS HUI

STATE OF CALIFORNIA - DEPARTMENT OF TRANSPORTATION
NORTH REGION
OFFICE OF DESIGN, WEST
DESIGN BRANCH S7

LAST REVISION 00-00-00 | DATE PLOTTED => | TIME PLOTTED =>

Dist	COUNTY	ROUTE	KILOMETER POST TOTAL PROJECT	SHEET No.	TOTAL SHEETS
02	Plu	70	56.5/57.2	23	149

CERTIFED ENGINEERING GEOLOGIST DATE

11-2-09
PLANS APPROVAL DATE

PROFESSIONAL GEOLOGIST JOHN D. DUFFY NO. 2268 CERTIFIED ENGINEERING GEOLOGIST 2-28-09 STATE OF CALIFORNIA

THE STATE OF CALIFORNIA OR ITS OFFICERS OR AGENTS SHALL NOT BE RESPONSIBLE FOR THE ACCURACY OR COMPLETENESS OF ELECTRONIC COPIES OF THIS PLAN SHEET.

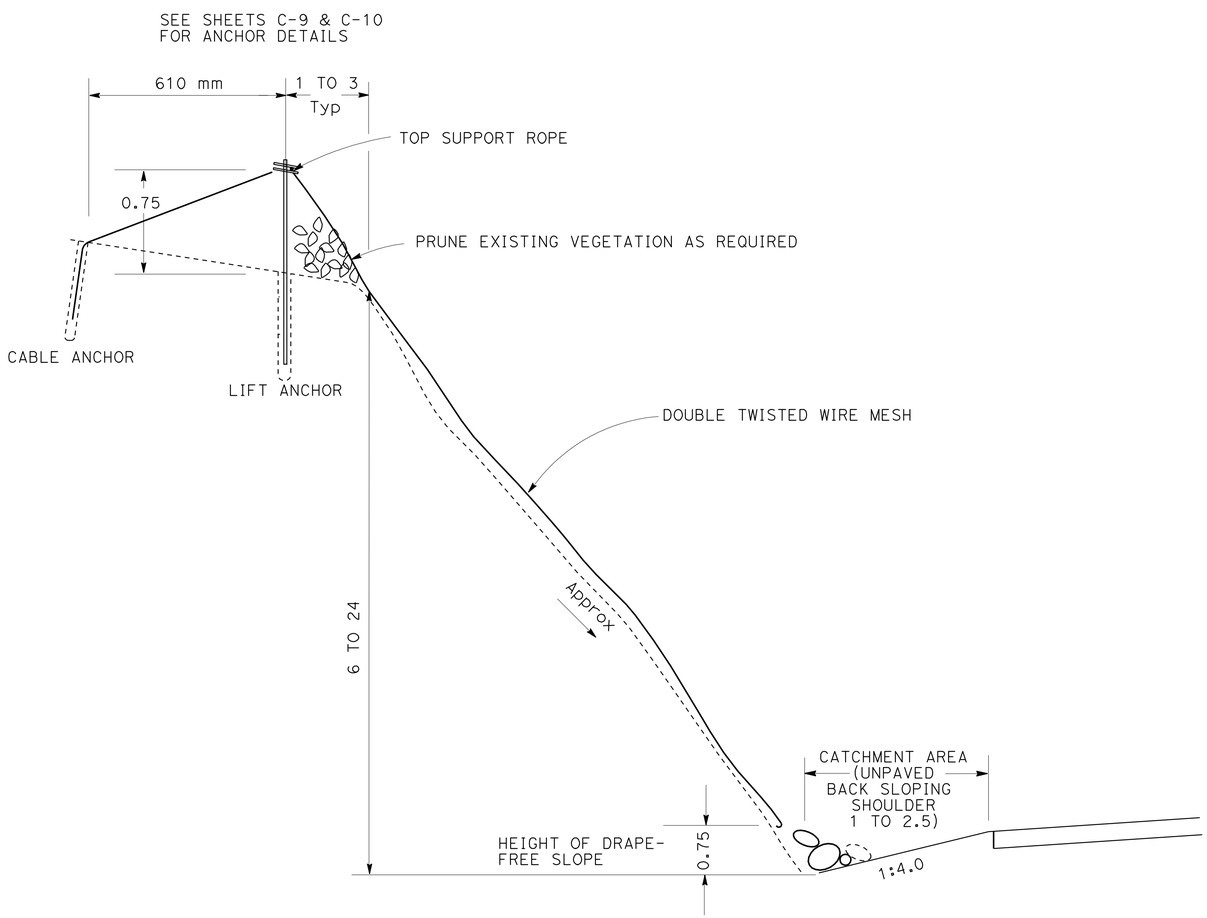

LIFT ANCHOR METHOD

FROM APPROXIMATELY "A70" 18+00 TO "A70" 19+10
OR AS DIRECTED BY THE ENGINEER

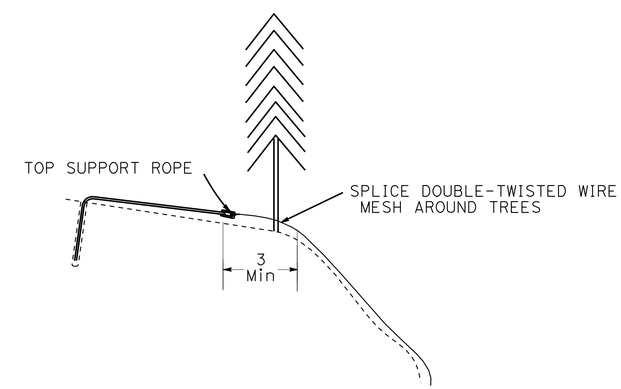

CABLE ANCHOR METHOD

FROM APPROXIMATELY "A70" 17+60 TO "A70" 17+90
CABLE ANCHORS TO BE UTILIZED, OR AS DIRECTED BY THE ENGINEER.

DOUBLE TWISTED WIRE MESH (DTWM) DRAPERY SYSTEM GENERAL DETAILS

ALL DIMENSIONS ARE IN METERS
UNLESS OTHERWISE SHOWN

CONSTRUCTION DETAILS

NO SCALE

C-7

STATE OF CALIFORNIA - DEPARTMENT OF TRANSPORTATION
NORTH REGION
OFFICE OF DESIGN, WEST
DESIGN BRANCH S7

FUNCTIONAL SUPERVISOR: CYRUS HUI
CALCULATED-DESIGNED BY: JOHN DUFFY
CHECKED BY: SCOTT LEWIS
REVISED BY / DATE REVISED

LAST REVISION 00-00-00 | DATE PLOTTED => 10-NOV-2009 | TIME PLOTTED => 07:07

Dist	COUNTY	ROUTE	KILOMETER POST TOTAL PROJECT	SHEET No.	TOTAL SHEETS
02	Plu	70	56.5/57.2	24	149

CERTIFED ENGINEERING GEOLOGIST DATE

11-2-09
PLANS APPROVAL DATE

PROFESSIONAL GEOLOGIST JOHN D. DUFFY NO. 2268 CERTIFIED ENGINEERING GEOLOGIST 2-28-09 STATE OF CALIFORNIA

THE STATE OF CALIFORNIA OR ITS OFFICERS OR AGENTS SHALL NOT BE RESPONSIBLE FOR THE ACCURACY OR COMPLETENESS OF ELECTRONIC COPIES OF THIS PLAN SHEET.

Caltrans Metric

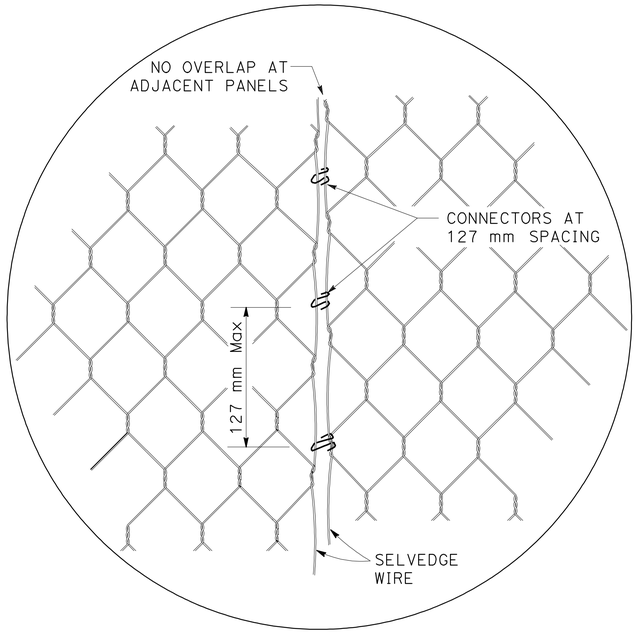

ADJACENT PANEL DETAIL C

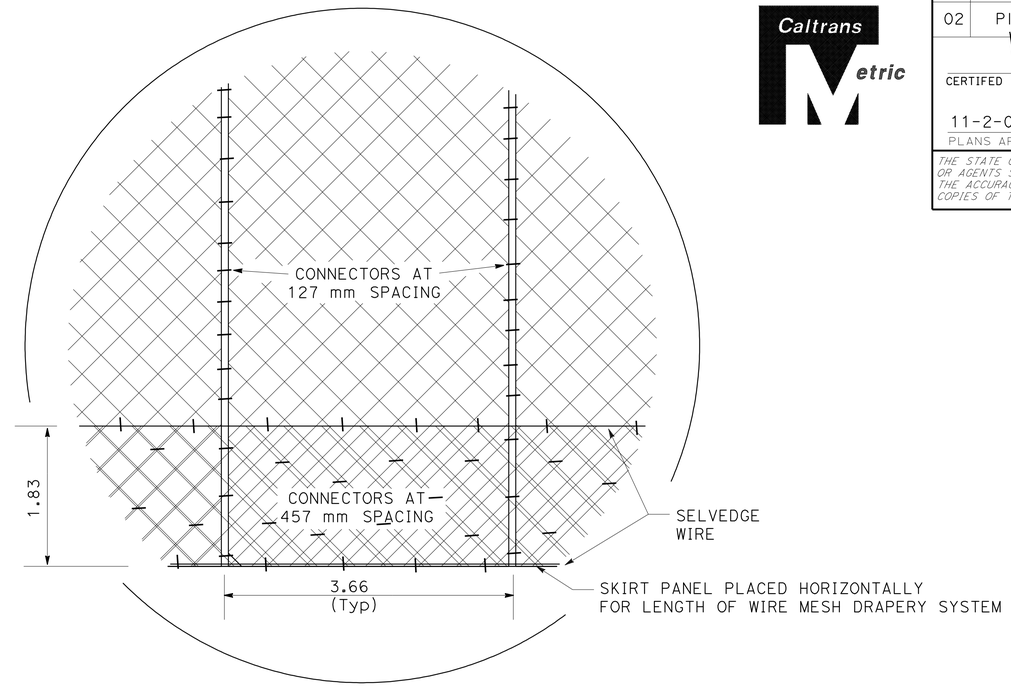

SKIRT PANEL DETAIL D

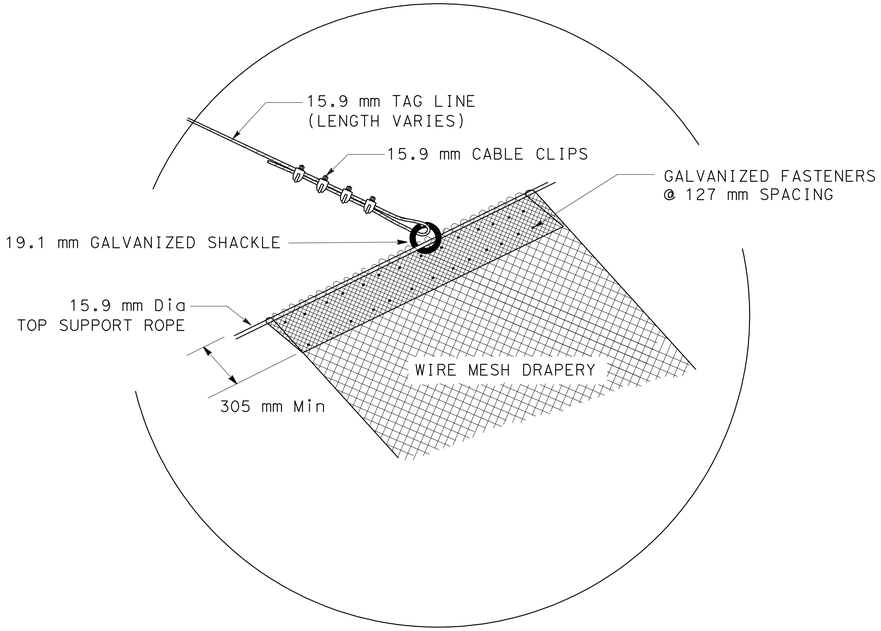

TAG LINE TO TOP SUPPORT ROPE
CONNECTION DETAIL B

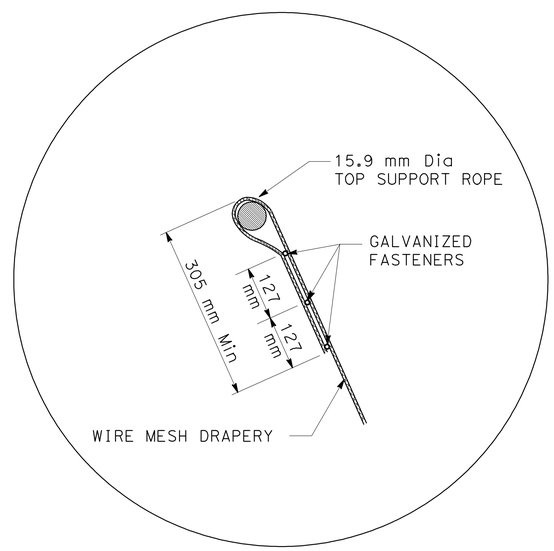

WIRE MESH DRAPERY TO
TOP SUPPORT ROPE CONNECTION DETAIL A

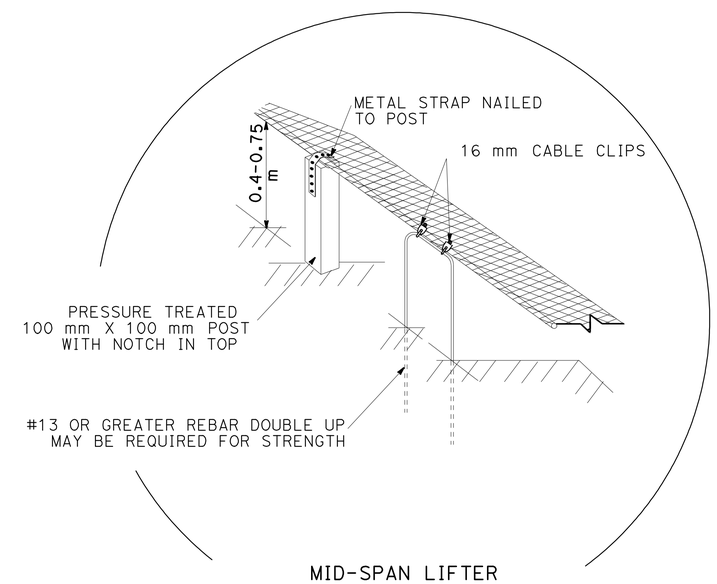

MID-SPAN LIFTER
POST AND REBAR STYLE

DOUBLE TWISTED WIRE MESH (DTWM) DRAPERY SYSTEM MESH FASTENERS, AND TOP SUPPORT ROPE DETAILS

ALL DIMENSIONS ARE IN METERS
UNLESS OTHERWISE SHOWN

CONSTRUCTION DETAILS
NO SCALE

C-8

REVISED BY	DATE REVISED

JOHN DUFFY — CALCULATED-DESIGNED BY
SCOTT LEWIS — CHECKED BY
FUNCTIONAL SUPERVISOR: CYRUS HUI

STATE OF CALIFORNIA - DEPARTMENT OF TRANSPORTATION
NORTH REGION
OFFICE OF DESIGN, WEST
DESIGN BRANCH S7
Caltrans

LAST REVISION 00-00-00 | DATE PLOTTED => 10-NOV-2009 | TIME PLOTTED => 07:07

Dist	COUNTY	ROUTE	KILOMETER POST TOTAL PROJECT	SHEET No.	TOTAL SHEETS
02	Plu	70	56.5/57.2	25	149

CERTIFED ENGINEERING GEOLOGIST DATE

11-2-09
PLANS APPROVAL DATE

PROFESSIONAL GEOLOGIST JOHN D. DUFFY NO. 2268 CERTIFIED ENGINEERING GEOLOGIST 2-28-09 STATE OF CALIFORNIA

THE STATE OF CALIFORNIA OR ITS OFFICERS OR AGENTS SHALL NOT BE RESPONSIBLE FOR THE ACCURACY OR COMPLETENESS OF ELECTRONIC COPIES OF THIS PLAN SHEET.

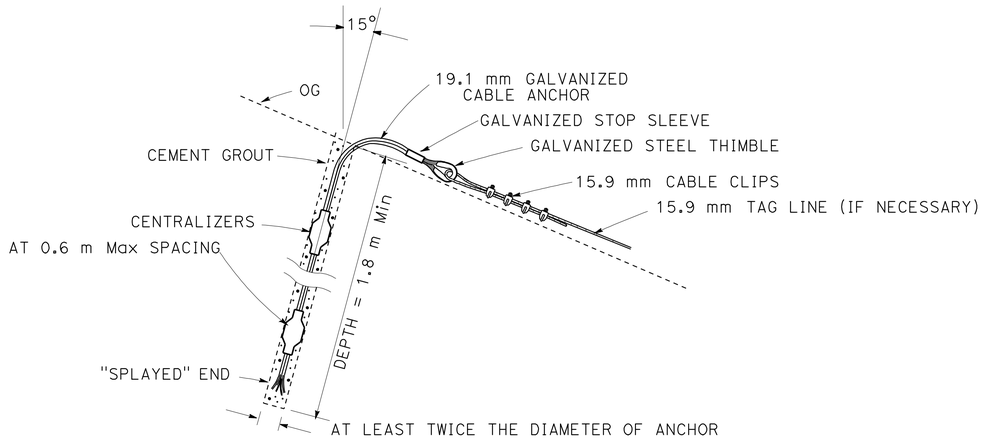

ALTERNATE A
CABLE ANCHOR

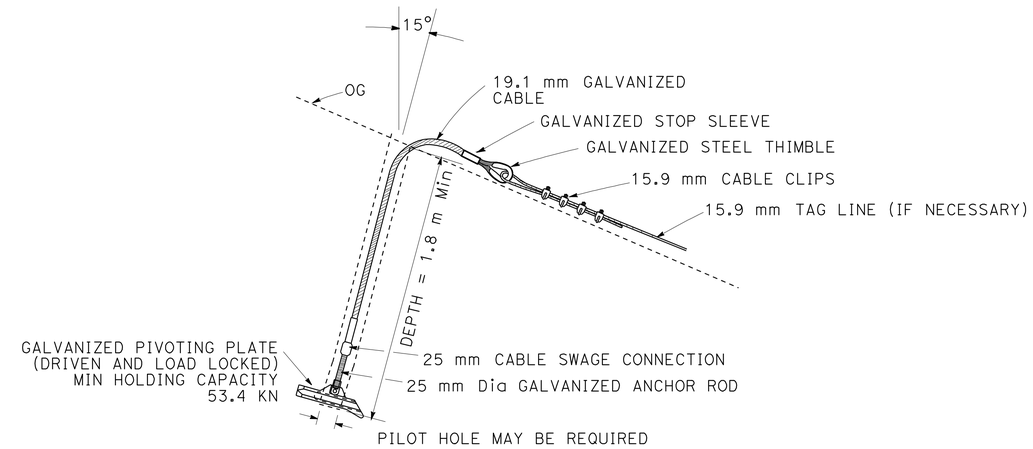

ALTERNATE B
MECHANICAL SOIL CABLE ANCHOR

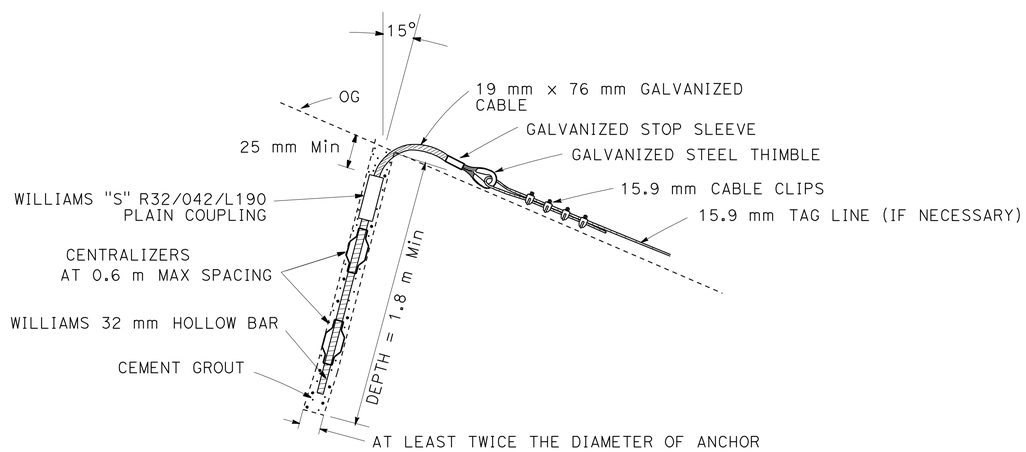

ALTERNATE C
HOLLOW BAR CABLE ANCHOR DETAILS

DOUBLE TWISTED WIRE MESH (DTWM) DRAPERY SYSTEM

ALL DIMENSIONS ARE IN METERS
UNLESS OTHERWISE SHOWN

CONSTRUCTION DETAILS

NO SCALE

C-9

REVISED BY	DATE REVISED

CALCULATED-DESIGNED BY	JOHN DUFFY
CHECKED BY	SCOTT LEWIS
FUNCTIONAL SUPERVISOR	CYRUS HUI

STATE OF CALIFORNIA - DEPARTMENT OF TRANSPORTATION
NORTH REGION
OFFICE OF DESIGN, WEST
DESIGN BRANCH S7

LAST REVISION 00-00-00 | DATE PLOTTED => 10-NOV-2009 | TIME PLOTTED => 07:07

Dist	COUNTY	ROUTE	KILOMETER POST TOTAL PROJECT	SHEET No.	TOTAL SHEETS
02	Plu	70	56.5/57.2	26	149

CERTIFED ENGINEERING GEOLOGIST DATE

11-2-09
PLANS APPROVAL DATE

PROFESSIONAL GEOLOGIST JOHN D. DUFFY NO. 2268 CERTIFIED ENGINEERING GEOLOGIST 2-28-09 STATE OF CALIFORNIA

THE STATE OF CALIFORNIA OR ITS OFFICERS OR AGENTS SHALL NOT BE RESPONSIBLE FOR THE ACCURACY OR COMPLETENESS OF ELECTRONIC COPIES OF THIS PLAN SHEET.

Caltrans Metric

LEGEND

HDG HOT-DIPPED GALVANIZED

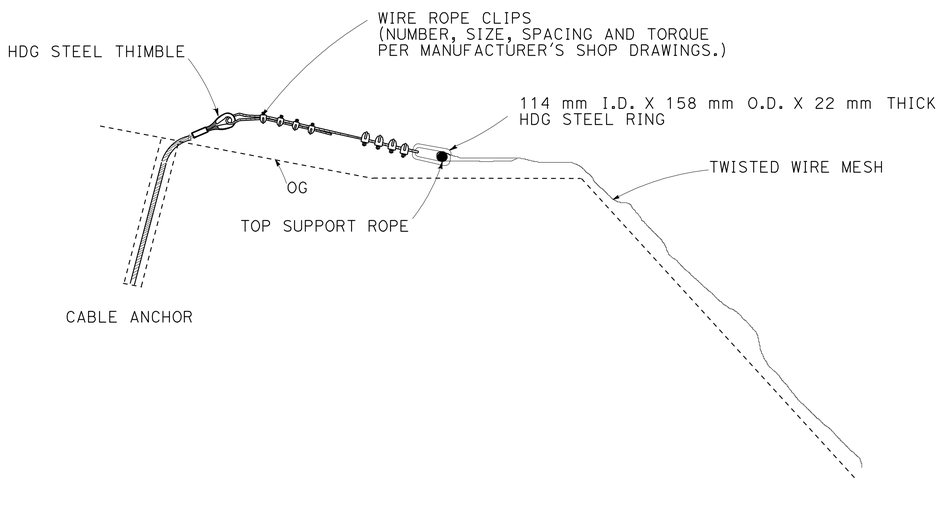

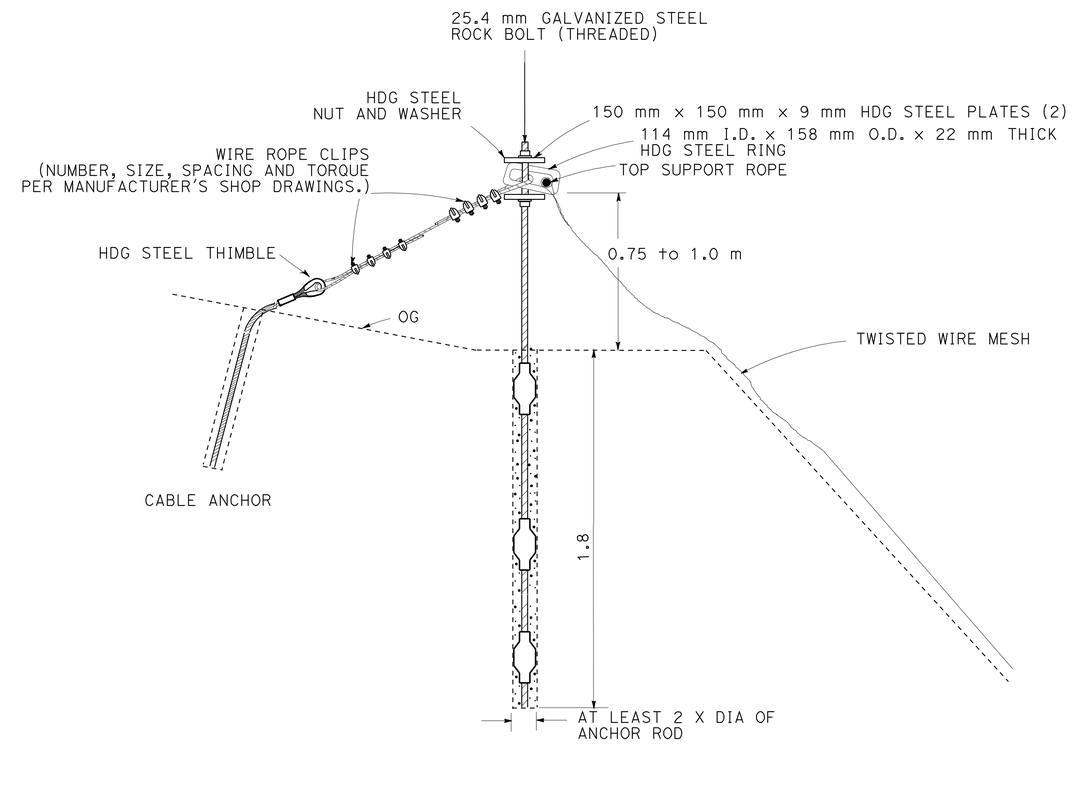

DOUBLE TWISTED WIRE MESH (DTWN) DRAPERY SYSTEM
TOP MESH ANCHORING DETAILS

ALL DIMENSIONS ARE IN METERS
UNLESS OTHERWISE SHOWN

CONSTRUCTION DETAILS

NO SCALE

C-10

STATE OF CALIFORNIA - DEPARTMENT OF TRANSPORTATION
NORTH REGION
OFFICE OF DESIGN, WEST
DESIGN BRANCH S7

Caltrans

FUNCTIONAL SUPERVISOR: CYRUS HUI

CALCULATED-DESIGNED BY: JOHN DUFFY
CHECKED BY: SCOTT LEWIS

REVISED BY
DATE REVISED

LAST REVISION 00-00-00
DATE PLOTTED => 10-NOV-2009
TIME PLOTTED => 07:07

Dist	COUNTY	ROUTE	KILOMETER POST TOTAL PROJECT	SHEET No.	TOTAL SHEETS
02	Plu	70	56.5/57.2	27	149

LICENSED LANDSCAPE ARCHITECT

11-2-09
PLANS APPROVAL DATE

LICENSED LANDSCAPE ARCHITECT
RONALD MARTIN FLORY
#4981
Signature
9-30-10
Renewal Date
7-21-09
Date
STATE OF CALIFORNIA

THE STATE OF CALIFORNIA OR ITS OFFICERS OR AGENTS SHALL NOT BE RESPONSIBLE FOR THE ACCURACY OR COMPLETENESS OF ELECTRONIC COPIES OF THIS PLAN SHEET.

Caltrans Metric

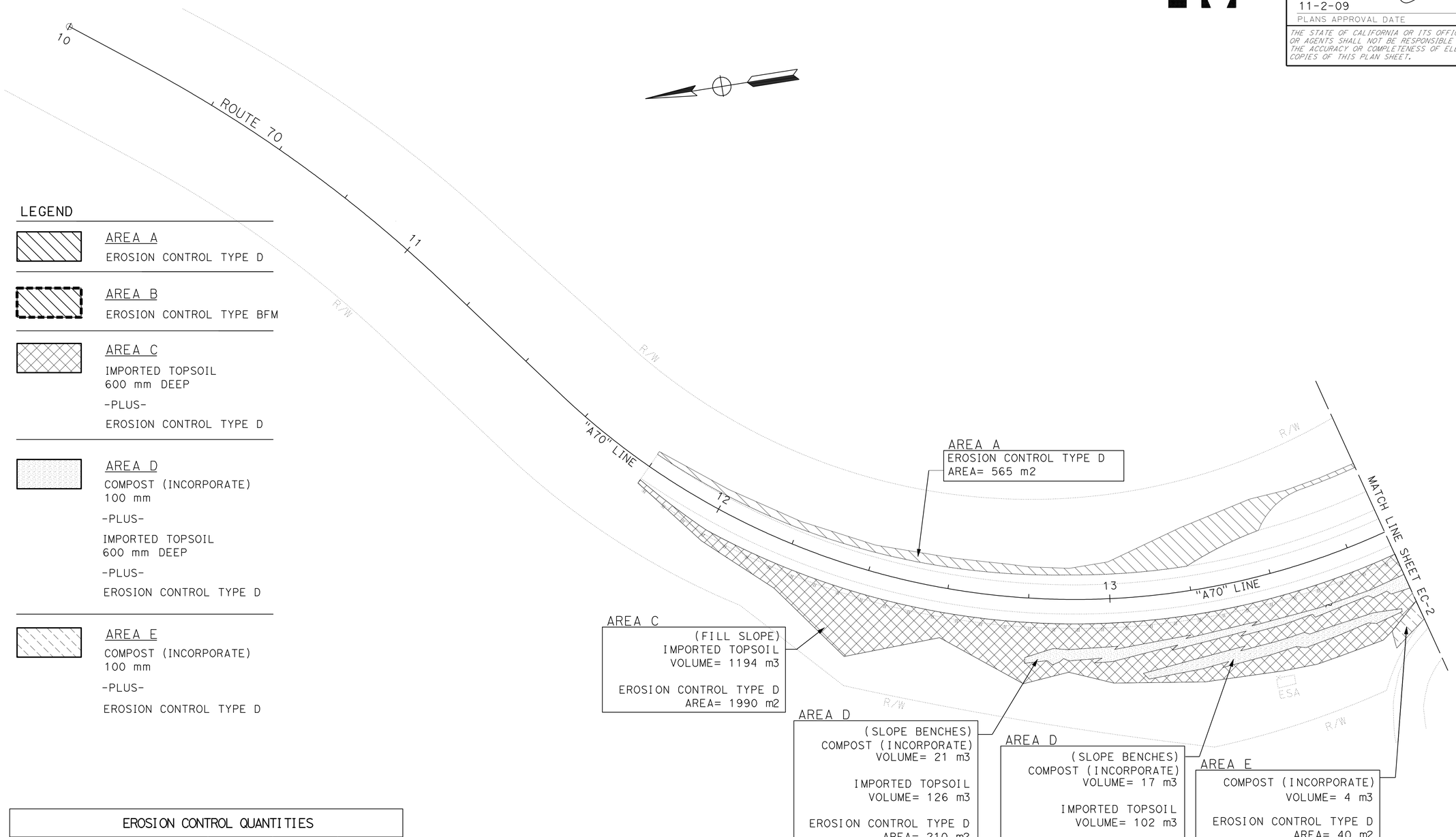

LEGEND

AREA A
EROSION CONTROL TYPE D

AREA B
EROSION CONTROL TYPE BFM

AREA C
IMPORTED TOPSOIL
600 mm DEEP
-PLUS-
EROSION CONTROL TYPE D

AREA D
COMPOST (INCORPORATE)
100 mm
-PLUS-
IMPORTED TOPSOIL
600 mm DEEP
-PLUS-
EROSION CONTROL TYPE D

AREA E
COMPOST (INCORPORATE)
100 mm
-PLUS-
EROSION CONTROL TYPE D

EROSION CONTROL QUANTITIES

	ha	m2	m3
EROSION CONTROL TYPE D	1.62	16280	
EROSION CONTROL TYPE BFM	1.81	18120	
IMPORTED TOPSOIL	.43	4325	2595
COMPOST (INCORPORATE)	.50	4995	500

ALL DIMENSIONS ARE IN METERS UNLESS OTHERWISE SHOWN

EROSION CONTROL

SCALE 1:500

EC-1

THIS PLAN ACCURATE FOR EROSION CONTROL WORK ONLY

REVISED BY | DATE REVISED
ROBIN SOLARI | TIM ELLISON
CALCULATED-DESIGNED BY | CHECKED BY
SENIOR LANDSCAPE ARCHITECT
RONALD M. FLORY

STATE OF CALIFORNIA - DEPARTMENT OF TRANSPORTATION
Caltrans LANDSCAPE ARCHITECTURE

R:\PSE\02-373101resubmit2\237310ge001.dgn

LAST REVISION 01-26-09 | DATE PLOTTED => 10-NOV-2009 | TIME PLOTTED => 07:08

Dist	COUNTY	ROUTE	KILOMETER POST TOTAL PROJECT	SHEET No.	TOTAL SHEETS
02	Plu	70	56.5/57.2	28	149

LICENSED LANDSCAPE ARCHITECT

11-2-09
PLANS APPROVAL DATE

LICENSED LANDSCAPE ARCHITECT
RONALD MARTIN FLORY
#4981
Signature
9-30-10
Renewal Date
7-21-09
Date
STATE OF CALIFORNIA

THE STATE OF CALIFORNIA OR ITS OFFICERS OR AGENTS SHALL NOT BE RESPONSIBLE FOR THE ACCURACY OR COMPLETENESS OF ELECTRONIC COPIES OF THIS PLAN SHEET.

Caltrans Metric

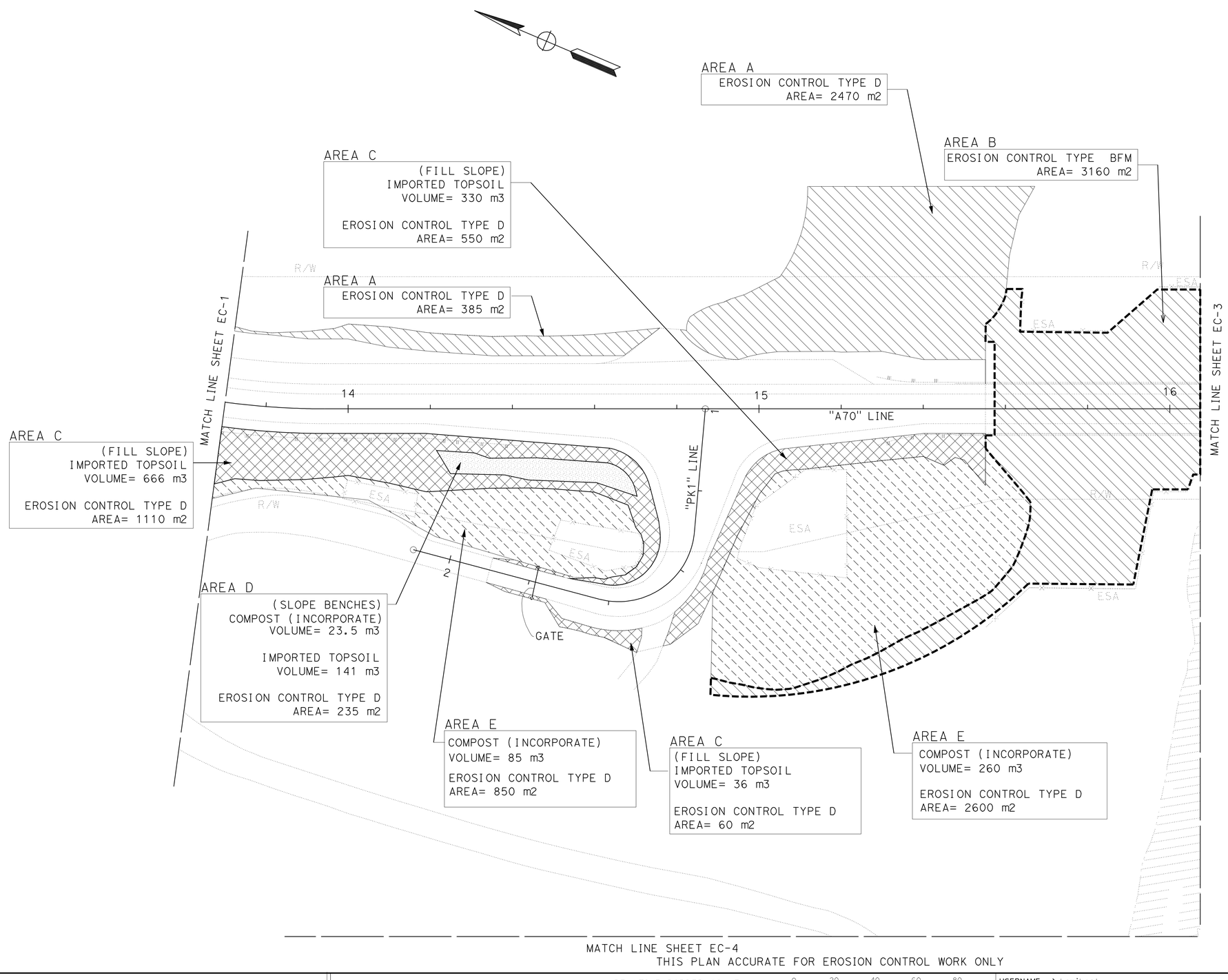

ALL DIMENSIONS ARE IN METERS UNLESS OTHERWISE SHOWN

EROSION CONTROL

SCALE 1:500

EC-2

REVISED BY	DATE REVISED

CALCULATED-DESIGNED BY	ROBIN SOLARI
CHECKED BY	TIM ELLISON
SENIOR LANDSCAPE ARCHITECT	RONALD M. FLORY

STATE OF CALIFORNIA - DEPARTMENT OF TRANSPORTATION
Caltrans LANDSCAPE ARCHITECTURE

R:\PSE\02-373101\237310ge002.dgn

LAST REVISION 01-26-09 DATE PLOTTED => 10-NOV-2009 TIME PLOTTED => 07:08

Dist	COUNTY	ROUTE	KILOMETER POST TOTAL PROJECT	SHEET No.	TOTAL SHEETS
02	Plu	70	56.5/57.2	29	149

LICENSED LANDSCAPE ARCHITECT

11-2-09
PLANS APPROVAL DATE

LICENSED LANDSCAPE ARCHITECT
RONALD MARTIN FLORY
#4981
Signature
9-30-10
Renewal Date
7-21-09
Date
STATE OF CALIFORNIA

THE STATE OF CALIFORNIA OR ITS OFFICERS OR AGENTS SHALL NOT BE RESPONSIBLE FOR THE ACCURACY OR COMPLETENESS OF ELECTRONIC COPIES OF THIS PLAN SHEET.

Caltrans Metric

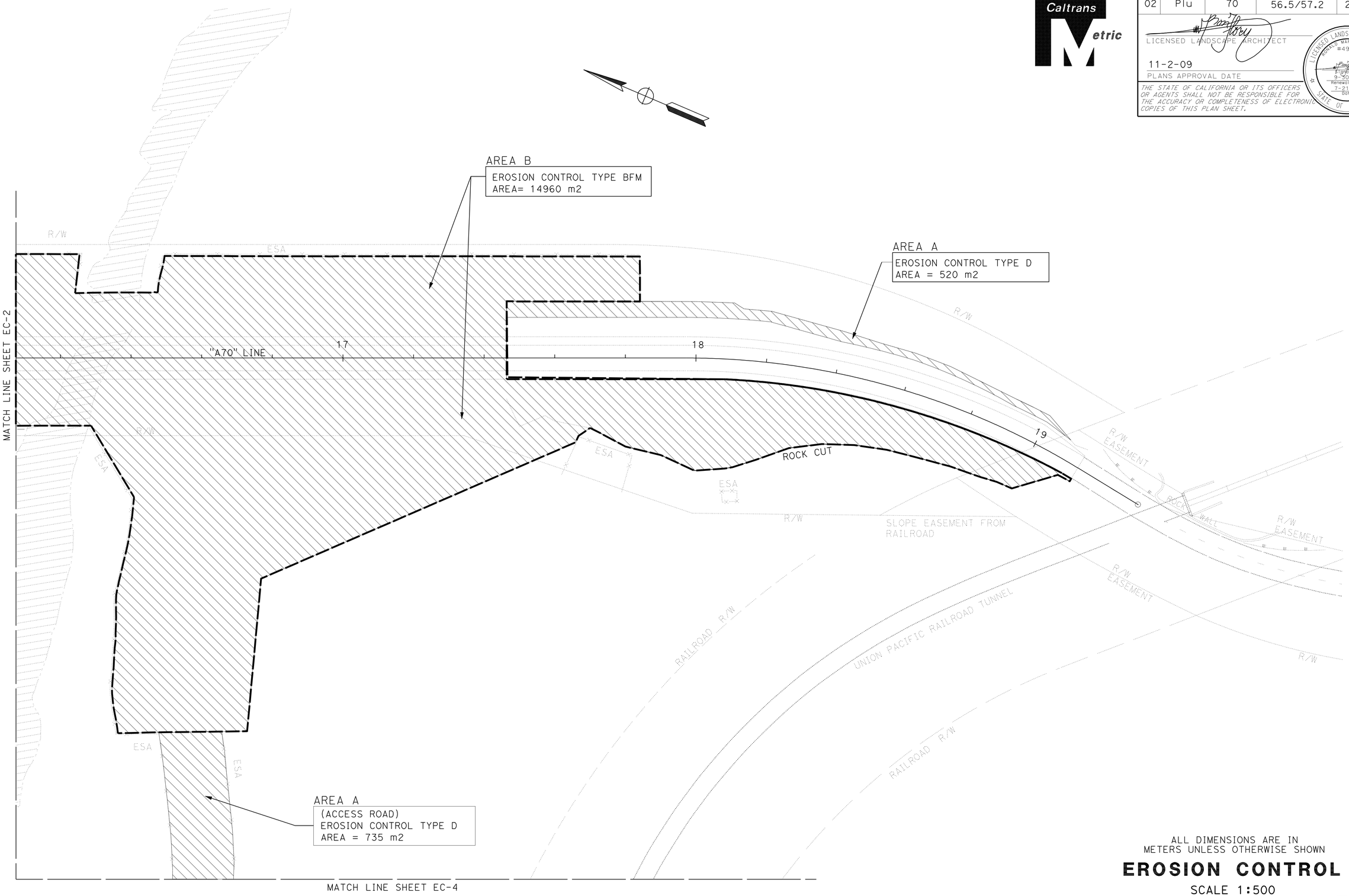

ALL DIMENSIONS ARE IN METERS UNLESS OTHERWISE SHOWN

EROSION CONTROL

SCALE 1:500

THIS PLAN ACCURATE FOR EROSION CONTROL WORK ONLY

EC-3

REVISED BY	DATE REVISED

CALCULATED-DESIGNED BY: ROBIN SOLARI
CHECKED BY: TIM ELLISON

SENIOR LANDSCAPE ARCHITECT: RONALD M. FLORY

STATE OF CALIFORNIA - DEPARTMENT OF TRANSPORTATION
Caltrans LANDSCAPE ARCHITECTURE

R:\PSE\02-373101\237310ge003.dgn

LAST REVISION 01-26-09 | DATE PLOTTED => 10-NOV-2009 | TIME PLOTTED => 07:08

Dist	COUNTY	ROUTE	KILOMETER POST TOTAL PROJECT	SHEET No.	TOTAL SHEETS
02	Plu	70	56.5/57.2	30	149

LICENSED LANDSCAPE ARCHITECT

11-2-09
PLANS APPROVAL DATE

THE STATE OF CALIFORNIA OR ITS OFFICERS OR AGENTS SHALL NOT BE RESPONSIBLE FOR THE ACCURACY OR COMPLETENESS OF ELECTRONIC COPIES OF THIS PLAN SHEET.

LICENSED LANDSCAPE ARCHITECT
RONALD MARTIN FLORY
#4981
Signature
9-30-10
Renewal Date
7-21-09
Date
STATE OF CALIFORNIA

Caltrans Metric

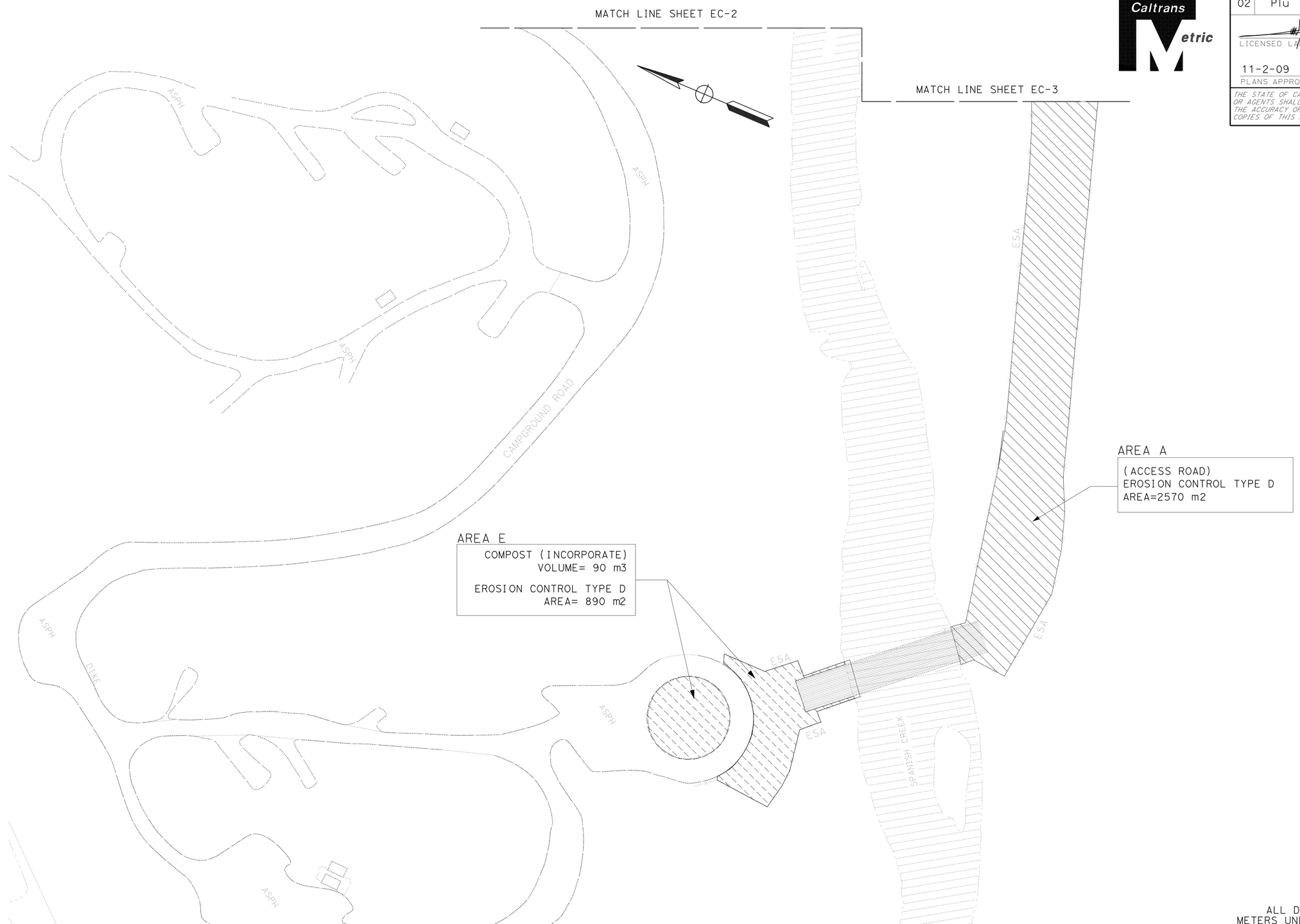

ALL DIMENSIONS ARE IN METERS UNLESS OTHERWISE SHOWN

EROSION CONTROL

SCALE 1:500

THIS PLAN ACCURATE FOR EROSION CONTROL WORK ONLY

EC-4

REVISED BY	DATE REVISED

ROBIN SOLARI
TIM ELLISON

CALCULATED-DESIGNED BY
CHECKED BY

SENIOR LANDSCAPE ARCHITECT
RONALD M. FLORY

STATE OF CALIFORNIA - DEPARTMENT OF TRANSPORTATION
Caltrans LANDSCAPE ARCHITECTURE

R:\PSE\02-373101\237310ge004.dgn

LAST REVISION 01-26-09
DATE PLOTTED => 10-NOV-2009
TIME PLOTTED => 07:08

Dist	COUNTY	ROUTE	KILOMETER POST TOTAL PROJECT	SHEET No.	TOTAL SHEETS
02	Plu	70	56.5/57.2	31	149

Davinder Minhas 7-21-09
REGISTERED CIVIL ENGINEER DATE

11-2-09
PLANS APPROVAL DATE

REGISTERED PROFESSIONAL ENGINEER
DAVINDER MINHAS
No. 70022
Exp. 9-30-10
CIVIL
STATE OF CALIFORNIA

THE STATE OF CALIFORNIA OR ITS OFFICERS OR AGENTS SHALL NOT BE RESPONSIBLE FOR THE ACCURACY OR COMPLETENESS OF ELECTRONIC COPIES OF THIS PLAN SHEET.

Caltrans Metric

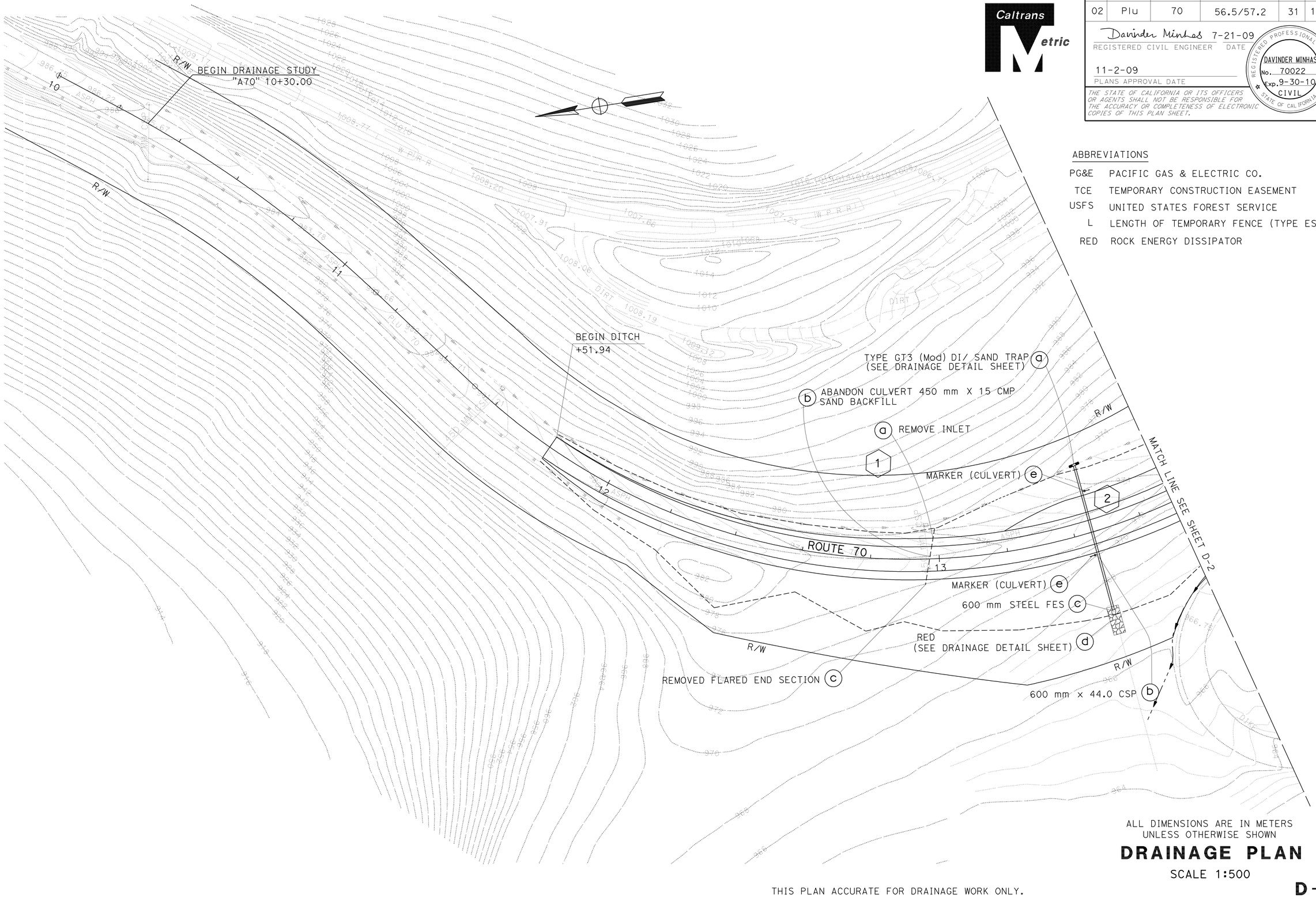

ABBREVIATIONS

PG&E	PACIFIC GAS & ELECTRIC CO.
TCE	TEMPORARY CONSTRUCTION EASEMENT
USFS	UNITED STATES FOREST SERVICE
L	LENGTH OF TEMPORARY FENCE (TYPE ESA)
RED	ROCK ENERGY DISSIPATOR

ALL DIMENSIONS ARE IN METERS
UNLESS OTHERWISE SHOWN

DRAINAGE PLAN

SCALE 1:500

THIS PLAN ACCURATE FOR DRAINAGE WORK ONLY.

D-1

STATE OF CALIFORNIA - DEPARTMENT OF TRANSPORTATION
NORTH REGION
OFFICE OF DESIGN, WEST
DESIGN BRANCH S7

Caltrans

FUNCTIONAL SUPERVISOR: CYRUS HUI

CALCULATED-DESIGNED BY: GEORGE N'JENGE
CHECKED BY: DAVINDER MINHAS

REVISED BY
DATE REVISED

LAST REVISION 00-00-00
DATE PLOTTED => 10-NOV-2009
TIME PLOTTED => 07:08

Dist	COUNTY	ROUTE	KILOMETER POST TOTAL PROJECT	SHEET No.	TOTAL SHEETS
02	Plu	70	56.5/57.2	32	149

Davinder Minhas 7-21-09
REGISTERED CIVIL ENGINEER DATE

11-2-09
PLANS APPROVAL DATE

REGISTERED PROFESSIONAL ENGINEER
DAVINDER MINHAS
No. 70022
Exp. 9-30-10
CIVIL
STATE OF CALIFORNIA

THE STATE OF CALIFORNIA OR ITS OFFICERS OR AGENTS SHALL NOT BE RESPONSIBLE FOR THE ACCURACY OR COMPLETENESS OF ELECTRONIC COPIES OF THIS PLAN SHEET.

Caltrans Metric

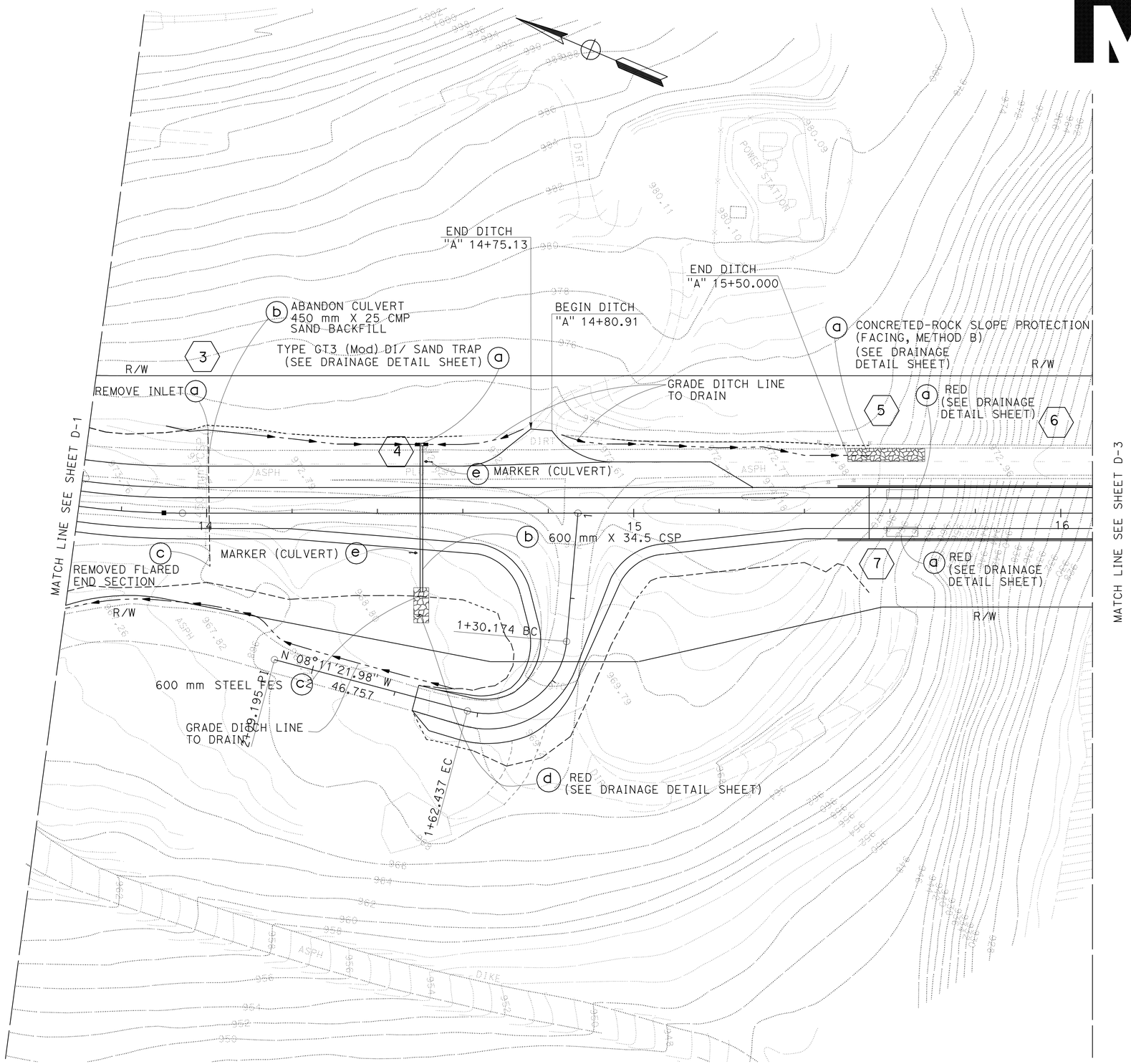

ALL DIMENSIONS ARE IN METERS
UNLESS OTHERWISE SHOWN

DRAINAGE PLAN

SCALE 1:500

THIS PLAN ACCURATE FOR DRAINAGE WORK ONLY.

D-2

STATE OF CALIFORNIA - DEPARTMENT OF TRANSPORTATION
NORTH REGION
OFFICE OF DESIGN, WEST
DESIGN BRANCH S7

Caltrans

FUNCTIONAL SUPERVISOR: CYRUS HUI

CALCULATED-DESIGNED BY: GEORGE N'JENGE
CHECKED BY: DAVINDER MINHAS

REVISED BY | DATE REVISED

LAST REVISION 00-00-00 | DATE PLOTTED => 10-NOV-2009 | TIME PLOTTED => 07:09

BORDER LAST REVISED 3/1/2007 | RELATIVE BORDER SCALE IS IN MILLIMETERS 0 20 40 60 80 | USERNAME => trmikesl | DGN FILE => 2373101a002.dgn | CU 03257 | EA 373101

Dist	COUNTY	ROUTE	KILOMETER POST TOTAL PROJECT	SHEET No.	TOTAL SHEETS
02	Plu	70	56.5/57.2	33	149

Davinder Minhas 7-21-09
REGISTERED CIVIL ENGINEER DATE

11-2-09
PLANS APPROVAL DATE

REGISTERED PROFESSIONAL ENGINEER
DAVINDER MINHAS
No. 70022
Exp. 9-30-10
CIVIL
STATE OF CALIFORNIA

THE STATE OF CALIFORNIA OR ITS OFFICERS OR AGENTS SHALL NOT BE RESPONSIBLE FOR THE ACCURACY OR COMPLETENESS OF ELECTRONIC COPIES OF THIS PLAN SHEET.

Caltrans Metric

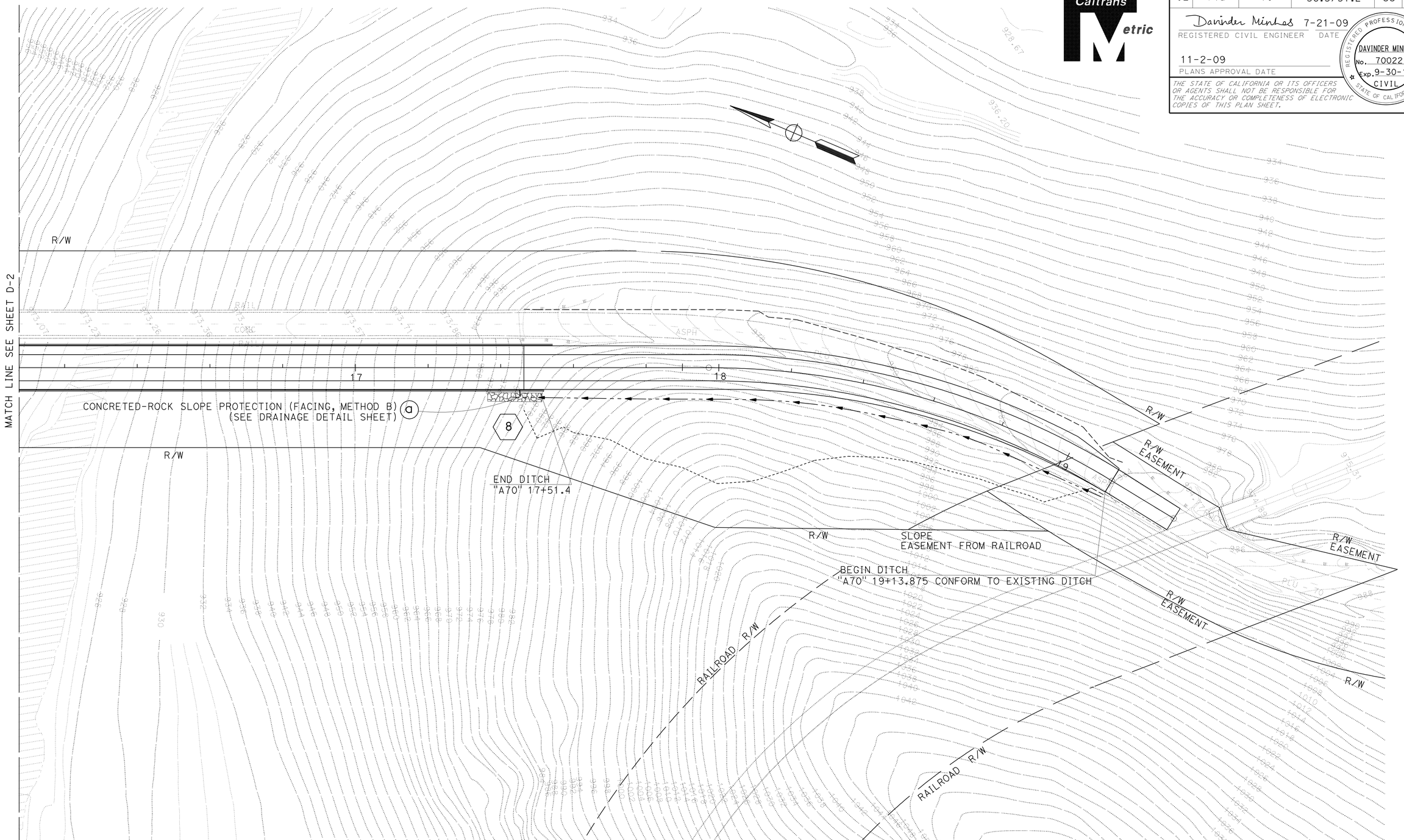

ALL DIMENSIONS ARE IN METERS
UNLESS OTHERWISE SHOWN

DRAINAGE PLAN

SCALE 1:500

THIS PLAN ACCURATE FOR DRAINAGE WORK ONLY.

D-3

REVISED BY	DATE REVISED

CALCULATED-DESIGNED BY	GEORGE N'JENGE
CHECKED BY	DAVINDER MINHAS
FUNCTIONAL SUPERVISOR	CYRUS HUI

STATE OF CALIFORNIA - DEPARTMENT OF TRANSPORTATION
Caltrans
NORTH REGION
OFFICE OF DESIGN, WEST
DESIGN BRANCH S7

LAST REVISION 00-00-00 | DATE PLOTTED => 10-NOV-2009 | TIME PLOTTED => 07:09

Dist	COUNTY	ROUTE	KILOMETER POST TOTAL PROJECT	SHEET No.	TOTAL SHEETS
02	Plu	70	56.5/57.2	34	149

Davinder Minhas 7-21-09
REGISTERED CIVIL ENGINEER DATE

11-2-09
PLANS APPROVAL DATE

REGISTERED PROFESSIONAL ENGINEER DAVINDER MINHAS No. 70022 Exp. 9-30-10 CIVIL STATE OF CALIFORNIA

THE STATE OF CALIFORNIA OR ITS OFFICERS OR AGENTS SHALL NOT BE RESPONSIBLE FOR THE ACCURACY OR COMPLETENESS OF ELECTRONIC COPIES OF THIS PLAN SHEET.

Caltrans Metric

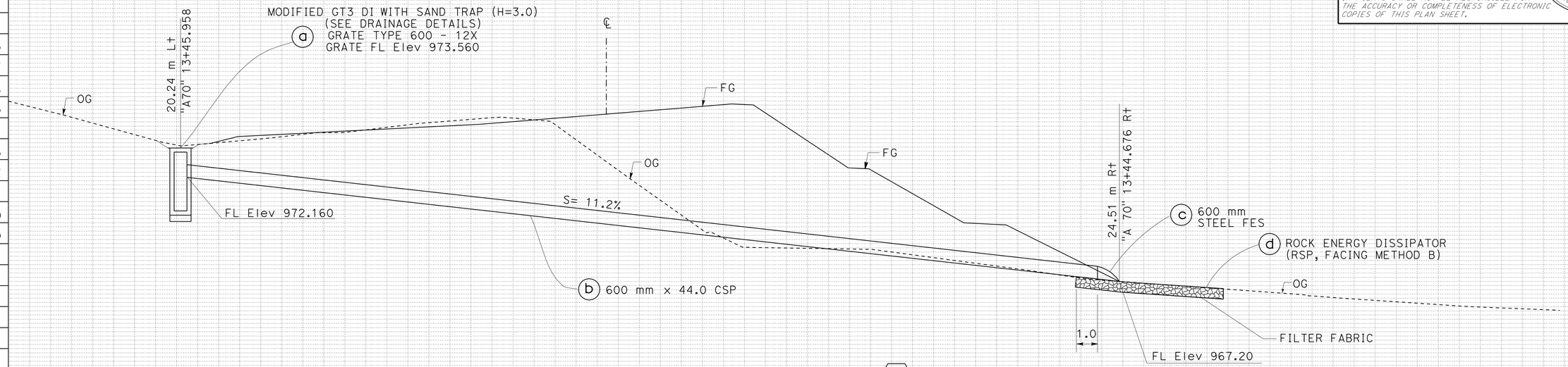

DRAINAGE SYSTEM No. 2
"A70" 13+45.30

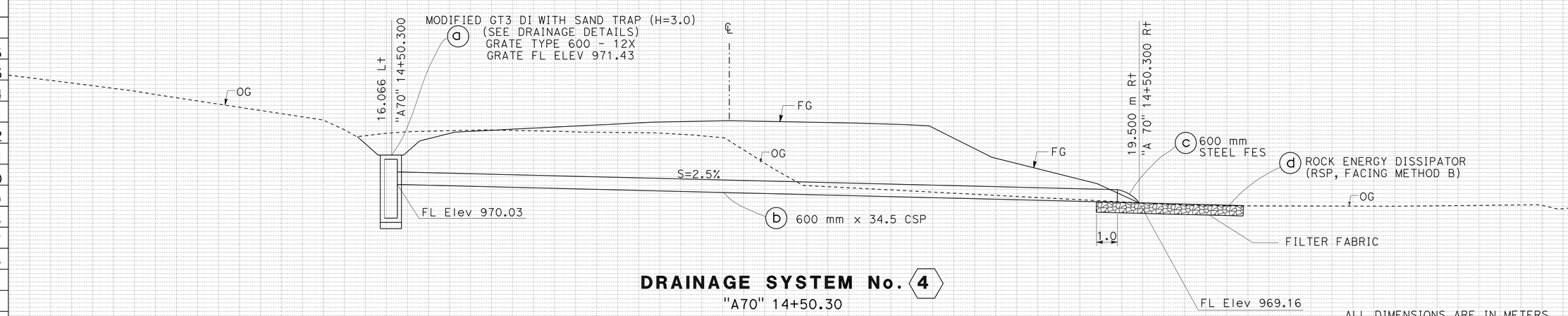

DRAINAGE SYSTEM No. 4
"A70" 14+50.30

ALL DIMENSIONS ARE IN METERS
UNLESS OTHERWISE SHOWN

DRAINAGE PROFILES

SCALE 1:10

DP-1

Station	
m^3 Exc	
m^3 Emb	

REVISED BY / DATE REVISED
GEORGE N'JENGE / DAVINDER MINHAS
CALCULATED-DESIGNED BY / CHECKED BY
FUNCTIONAL SUPERVISOR: CYRUS HUI

STATE OF CALIFORNIA - DEPARTMENT OF TRANSPORTATION
NORTH REGION
OFFICE OF DESIGN, WEST
DESIGN BRANCH S7
Caltrans

LAST REVISION 00-00-00
DATE PLOTTED => 10-NOV-2009
TIME PLOTTED => 07:09

Dist	COUNTY	ROUTE	KILOMETER POST TOTAL PROJECT	SHEET No.	TOTAL SHEETS
02	Plu	70	56.5/57.2	35	149

Davinder Minhas 7-21-09
REGISTERED CIVIL ENGINEER DATE

11-2-09
PLANS APPROVAL DATE

REGISTERED PROFESSIONAL ENGINEER DAVINDER MINHAS No. 70022 Exp. 9-30-10 CIVIL STATE OF CALIFORNIA

THE STATE OF CALIFORNIA OR ITS OFFICERS OR AGENTS SHALL NOT BE RESPONSIBLE FOR THE ACCURACY OR COMPLETENESS OF ELECTRONIC COPIES OF THIS PLAN SHEET.

Caltrans Metric

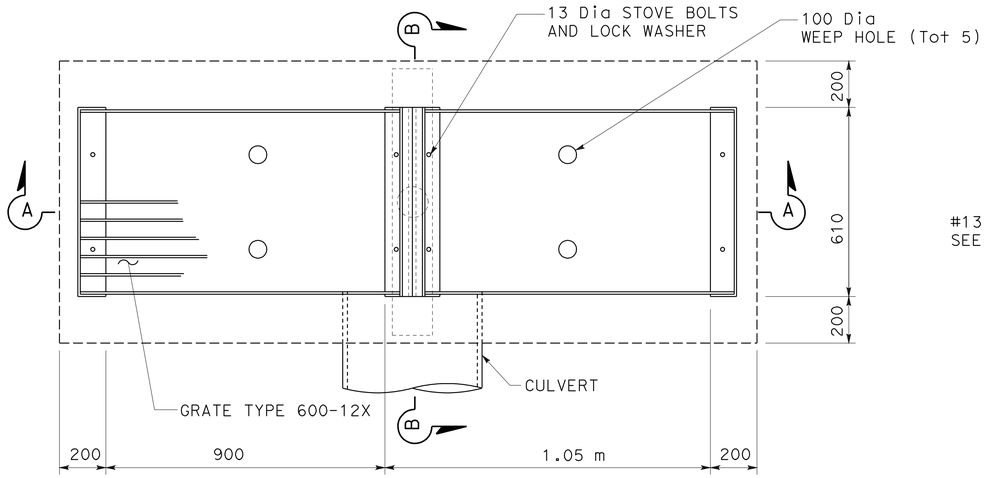

PLAN

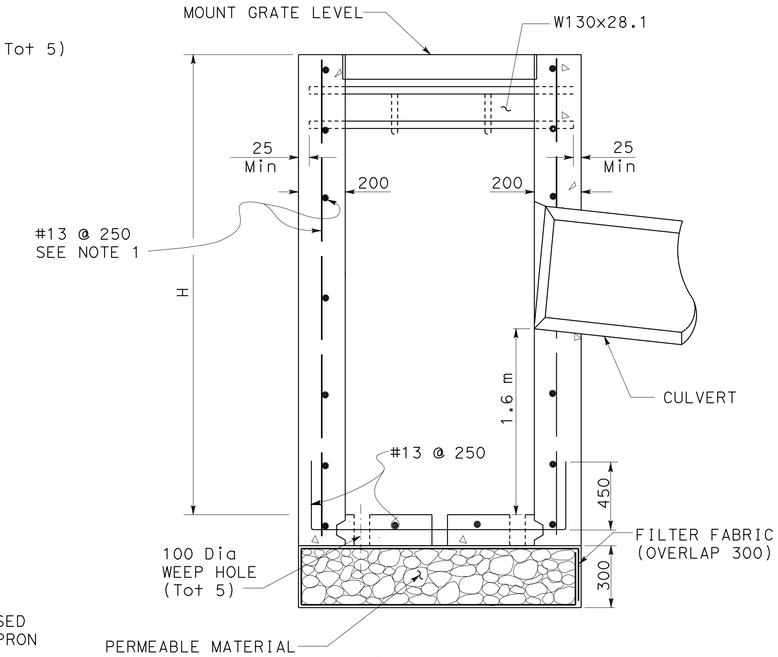

SECTION B-B

NOTES:

1. REINFORCEMENT IS NOT REQUIRED WHEN THE HEIGHT (H) IS LESS THAN 1.8 m

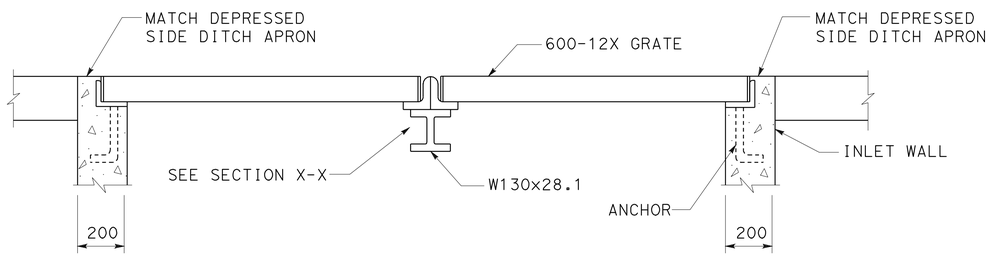

SECTION A-A

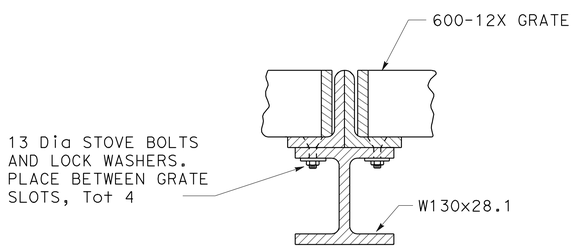

SECTION X-X

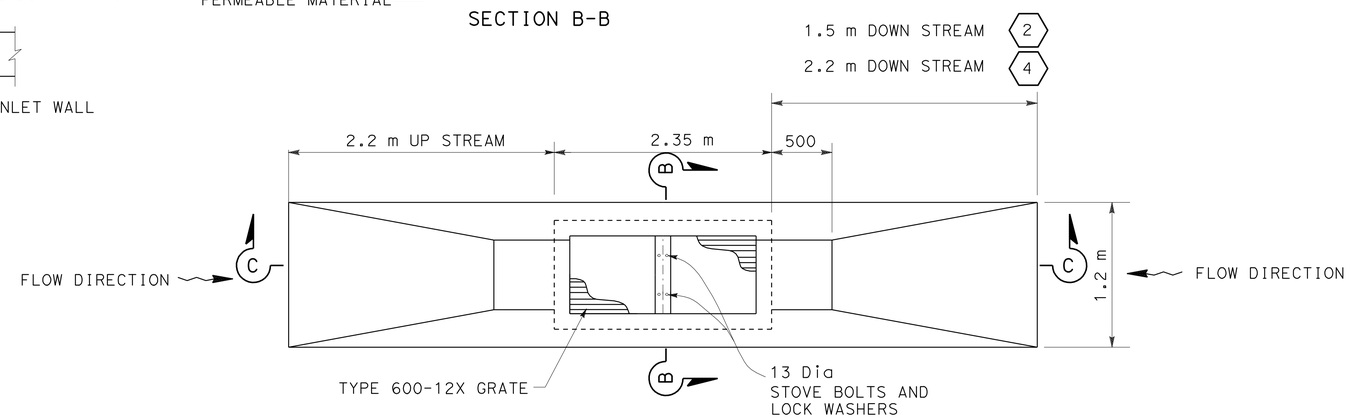

PLAN
(PCC APRON)

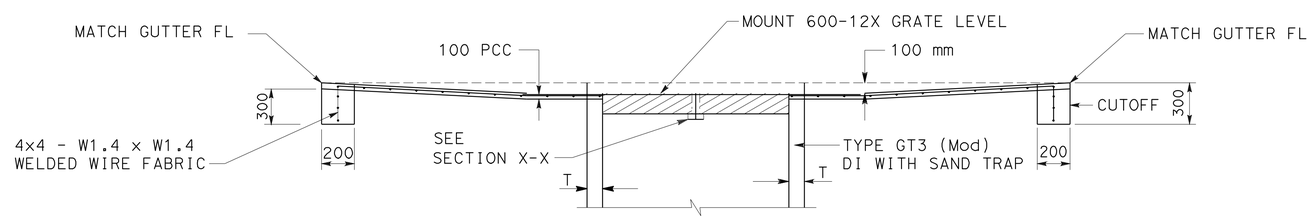

SECTION C-C

TYPE GT3 (Mod) DI W/SAND TRAP

(FOR DETAILS NOT SHOWN, SEE Std PLAN D74A)

DEPRESSED SIDE DITCH APRON DETAIL

DRAINAGE SYSTEM No.

2 a

4 a

ALL DIMENSIONS ARE IN MILLIMETERS UNLESS OTHERWISE SHOWN

DRAINAGE DETAILS

NO SCALE

DD-1

STATE OF CALIFORNIA - DEPARTMENT OF TRANSPORTATION
NORTH REGION
OFFICE OF DESIGN, WEST
DESIGN BRANCH S7

FUNCTIONAL SUPERVISOR: CYRUS HUI
CALCULATED-DESIGNED BY: GEORGE N'JENGE
CHECKED BY: DAVINDER MINHAS
REVISED BY
DATE REVISED

LAST REVISION 00-00-00 | DATE PLOTTED => 10-NOV-2009 | TIME PLOTTED => 07:09

Dist	COUNTY	ROUTE	KILOMETER POST TOTAL PROJECT	SHEET No.	TOTAL SHEETS
02	Plu	70	56.5/57.2	36	149

Davinder Minhas 7-21-09
REGISTERED CIVIL ENGINEER DATE

11-2-09
PLANS APPROVAL DATE

REGISTERED PROFESSIONAL ENGINEER DAVINDER MINHAS No. 70022 Exp. 9-30-10 CIVIL STATE OF CALIFORNIA

THE STATE OF CALIFORNIA OR ITS OFFICERS OR AGENTS SHALL NOT BE RESPONSIBLE FOR THE ACCURACY OR COMPLETENESS OF ELECTRONIC COPIES OF THIS PLAN SHEET.

Caltrans Metric

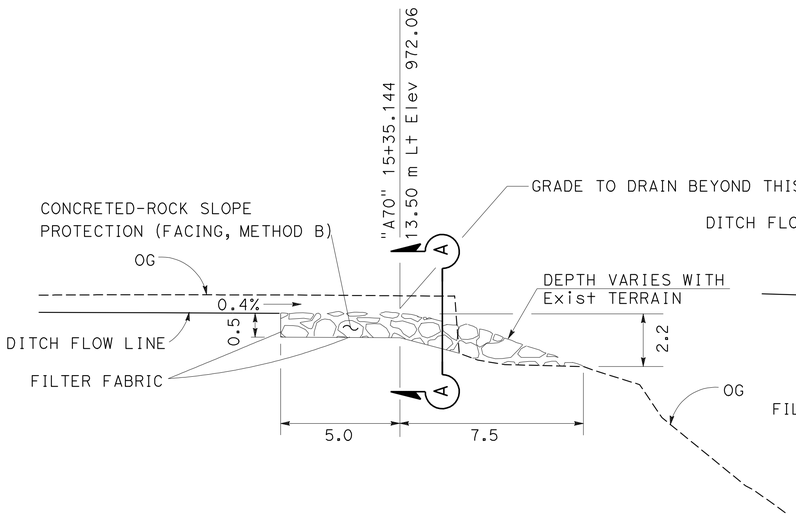

DRAINAGE SYSTEM No. 5 a

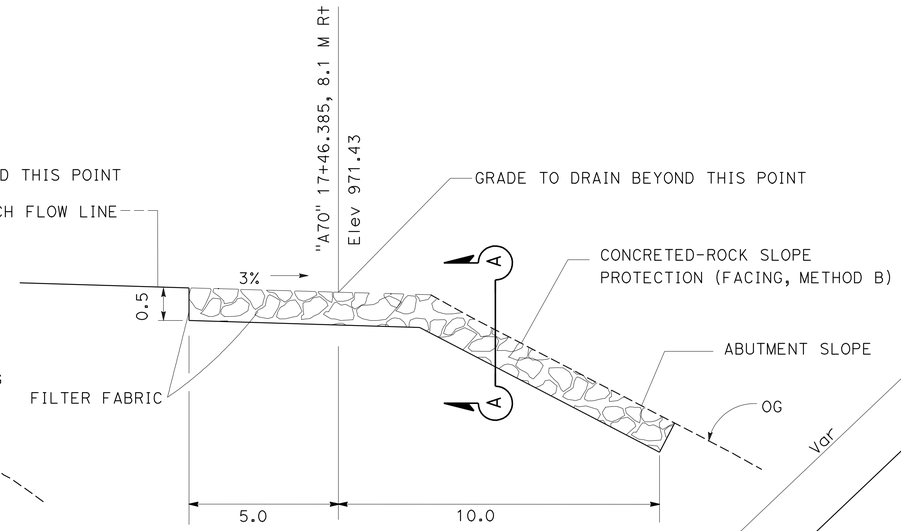

DRAINAGE SYSTEM No. 8 a

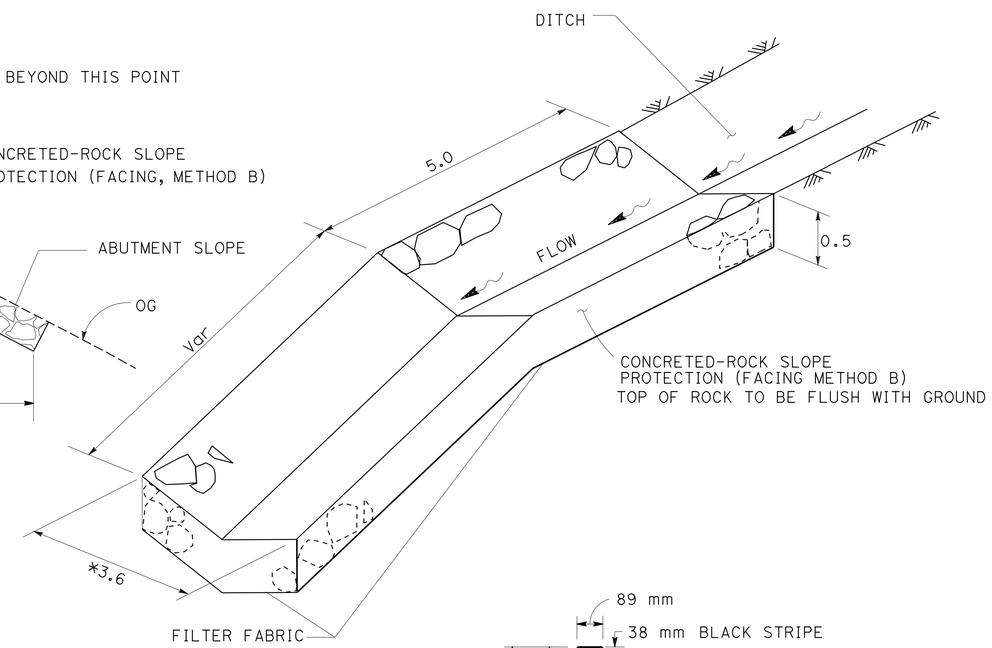

SECTION A-A

* 2.3 m FOR 8 a

ROCK SLOPE PROTECTION DETAILS

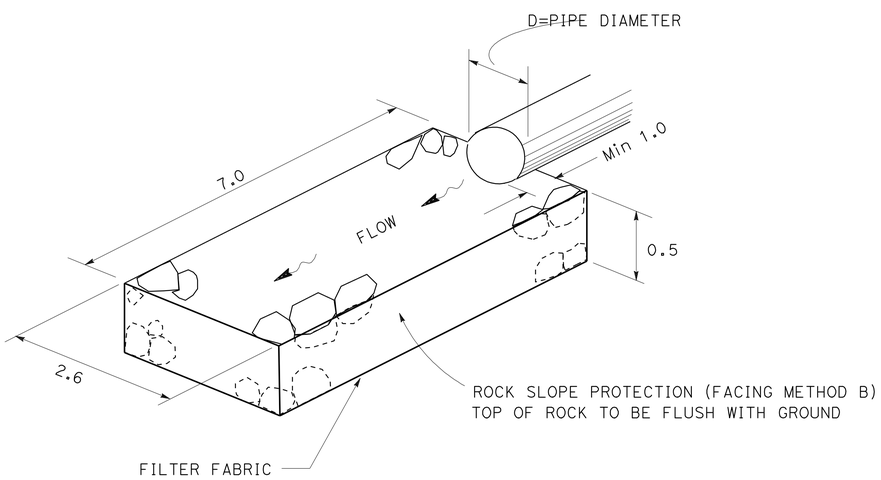

ROCK ENERGY DISSIPATOR DETAIL AT DRAINAGE OUTLET

DRAINAGE SYSTEM Nos 2 d, 4 d, 6 a & 7 a

ROCK SLOPE PROTECTION

DRAINAGE SYSTEM No.	DRAINAGE UNIT	(N) WIDTH	(N) LENGTH	(N) DEPTH	VOLUME CRSP	VOLUME RSP	TYPE DETAIL
		m	m	m	m^3	m^3	
2	d	2.6	7.0	0.5		9.1	RED
4	d	2.6	7.0	0.5		9.1	RED
5	a	3.6	12.5	0.5	22.5		RSP
6	a	1.0	3.0	0.5		1.5	RED
7	a	1.0	3.0	0.5		1.5	RED
8	a	2.3	15.0	0.5	17.3		RSP
TOTAL					39.8	21.2	

(N) NOT A SEPARATE PAY ITEM, FOR INFORMATION ONLY.
RED ROCK ENERGY DISSIPATOR
RSP ROCK SLOPE PROTECTION
CRSP CONCRETED-ROCK SLOPE PROTECTION

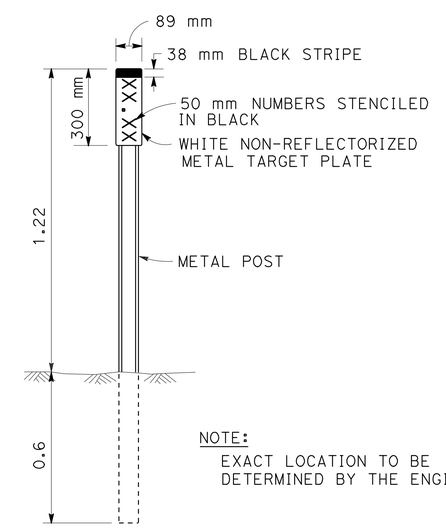

NOTE:
EXACT LOCATION TO BE DETERMINED BY THE ENGINEER

MARKER (CULVERT)

ALL DIMENSIONS ARE IN METERS UNLESS OTHERWISE SHOWN

DRAINAGE DETAILS

NO SCALE

DD-2

STATE OF CALIFORNIA - DEPARTMENT OF TRANSPORTATION
NORTH REGION
OFFICE OF DESIGN, WEST
DESIGN BRANCH S7

Caltrans

FUNCTIONAL SUPERVISOR: CYRUS HUI
CALCULATED-DESIGNED BY: GEORGE N'JENGE
CHECKED BY: CYRUS HUI
REVISED BY
DATE REVISED

LAST REVISION 00-00-00
DATE PLOTTED => 10-NOV-2009
TIME PLOTTED => 07:09

Dist	COUNTY	ROUTE	KILOMETER POST TOTAL PROJECT	SHEET No.	TOTAL SHEETS
02	Plu	70	56.5/57.2	37	149

Davinder Minhas 7-21-09
REGISTERED CIVIL ENGINEER DATE

11-2-09
PLANS APPROVAL DATE

REGISTERED PROFESSIONAL ENGINEER DAVINDER MINHAS No. 70022 Exp. 9-30-10 CIVIL STATE OF CALIFORNIA

THE STATE OF CALIFORNIA OR ITS OFFICERS OR AGENTS SHALL NOT BE RESPONSIBLE FOR THE ACCURACY OR COMPLETENESS OF ELECTRONIC COPIES OF THIS PLAN SHEET.

Caltrans Metric

DRAINAGE QUANTITIES

SHEET No.	DRAINAGE SYSTEM No.	DRAINAGE UNIT	REMOVE INLET (EA)	ABANDON CULVERT (m)	REMOVE FLARED END SECTION (EA)	SAND BACKFILL (m^3)	600 mm CORRUGATED STEEL PIPE (3.51 mm THICK) (m)	600 mm STEEL FLARED END SECTION (EA)	MARKER (CULVERT) (EA)	MINOR CONCRETE (MINOR STRUCTURE) (m^3)	FILTER FABRIC (m^2)	MISCELLANEOUS IRON AND STEEL (Kg)	(N) FRAME AND GRATE	(N) HEIGHT OF INLET (m)	(N) PERMEABLE MATERIAL (m^3)	(N) TYPE OF INLET	ROCK SLOPE PROTECTION (FACING, METHOD B) (m^3)	CONCRETED-ROCK SLOPE PROTECTION (FACING, METHOD B) (m^3)	DESCRIPTION	STATION	DRAINAGE SYSTEM No.	DRAINAGE UNIT
	1	a	1																REMOVE DRAINAGE INLET	"A70" 12+98.08	1	a
		b		15		2.4													ABANDON CULVERT/SAND BACKFILL			b
		c			1														REMOVE FLARED END SECTION			c
	2	a								3.3	4.8	215	2	3	0.71	GT3			TYPE GT3 DI (Mod)/SAND TRAP	"A70" 13+45.30	2	a
		b					44.0												600 mm X 44.0 m CSP			b
		c						1											600 mm STEEL FES			c
		d									29						9.1		ROCK ENERGY DISSIPATOR			d
		e							2										MARKER (CULVERT)			e
	3	a	1																REMOVE DRAINAGE INLET	"A70" 13+96.80	3	a
		b		25		4.0													ABANDON CULVERT/SAND BACKFILL			b
		c			1														REMOVE FLARED END SECTION			c
	4	a								3.3	4.8	215	2	3	0.71	GT3			TYPE GT3 DI (Mod)/SAND TRAP	"A70" 14+50.30	4	a
		b					34.5	1											600 mm X 34.5 m CSP			b
		c																	600 mm STEEL FES			c
		d									29						9.1		ROCK ENERGY DISSIPATOR			d
		e							2										MARKER (CULVERT)			e
	5	a									62							22.5	CONCRETED-ROCK SLOPE PROTECTION (FACING, METHOD B)		5	a
	6	a									8						1.5		ROCK ENERGY DISSIPATOR		6	a
	7	a									8						1.5		ROCK ENERGY DISSIPATOR		7	a
	8	a									53							17.3	CONCRETED-ROCK SLOPE PROTECTION (FACING, METHOD B)		8	a
TOTAL			2	40	2	6.4	78.5	2	4	6.6	198.6	430			1.42		21.2	39.8				

(N) NOT A SEPARATE PAY ITEM, FOR INFORMATION ONLY.

DRAINAGE QUANTITIES

DQ-1

GEORGE N'JENGE — REVISED BY
DAVINDER MINHAS — DATE REVISED
CALCULATED-DESIGNED BY
CHECKED BY
FUNCTIONAL SUPERVISOR
CYRUS HUI

STATE OF CALIFORNIA - DEPARTMENT OF TRANSPORTATION
NORTH REGION
OFFICE OF DESIGN, WEST
DESIGN BRANCH S7
Caltrans

LAST REVISION 00-00-00
DATE PLOTTED => 10-NOV-2009
TIME PLOTTED => 07:10

Dist	COUNTY	ROUTE	KILOMETER POST TOTAL PROJECT	SHEET No.	TOTAL SHEETS
02	Plu	70	56.5/57.2	38	149

Davinder Minhas 7-21-09
REGISTERED CIVIL ENGINEER DATE

11-2-09
PLANS APPROVAL DATE

REGISTERED PROFESSIONAL ENGINEER DAVINDER MINHAS No. 70022 Exp. 9-30-10 CIVIL STATE OF CALIFORNIA

THE STATE OF CALIFORNIA OR ITS OFFICERS OR AGENTS SHALL NOT BE RESPONSIBLE FOR THE ACCURACY OR COMPLETENESS OF ELECTRONIC COPIES OF THIS PLAN SHEET.

Caltrans Metric

STATIONARY MOUNTED CONSTRUCTION AREA SIGNS

SIGN INSTALLATION	SIGN CODE CALIFORNIA	SIGN CODE FEDERAL	SIGN MESSAGE	PANEL SIZE (mm)	NUMBER OF POSTS AND SIZE (mm)	No. OF INSTALLATION
Ⓐ		W20-1	ROAD WORK AHEAD	1200 x 1200	2 - 89 x 140	2
	C23B		BRIDGE REPLACEMENT	1372 x 610		
Ⓑ		G20-2	END ROAD WORK	900 x 450	2 - 89 x 89	2
Ⓒ			(FUNDING IDENTIFICATION SIGN)	2550 x 1500	2 - 140 x 184	2
Ⓓ	SP1		BRIDGE WORK AHEAD	1635 x 1635	1 - 89 x 140	4
Ⓔ	SP2		NO BOATING BEYOND THIS POINT	1500 x 1050	2 - 89 x 140	4
	SP3 OR SP4		USE PORTAGE	1950 x 450		
Ⓕ	SP5		CAMPGROUND CLOSED UNTIL SPRING 2013	1950 X 1200	2 - 89 x 140	1

NOTES:

1. SIGN LOCATIONS SHOWN ARE APPROXIMATE. EXACT LOCATIONS TO BE DETERMINED BY THE ENGINEER.

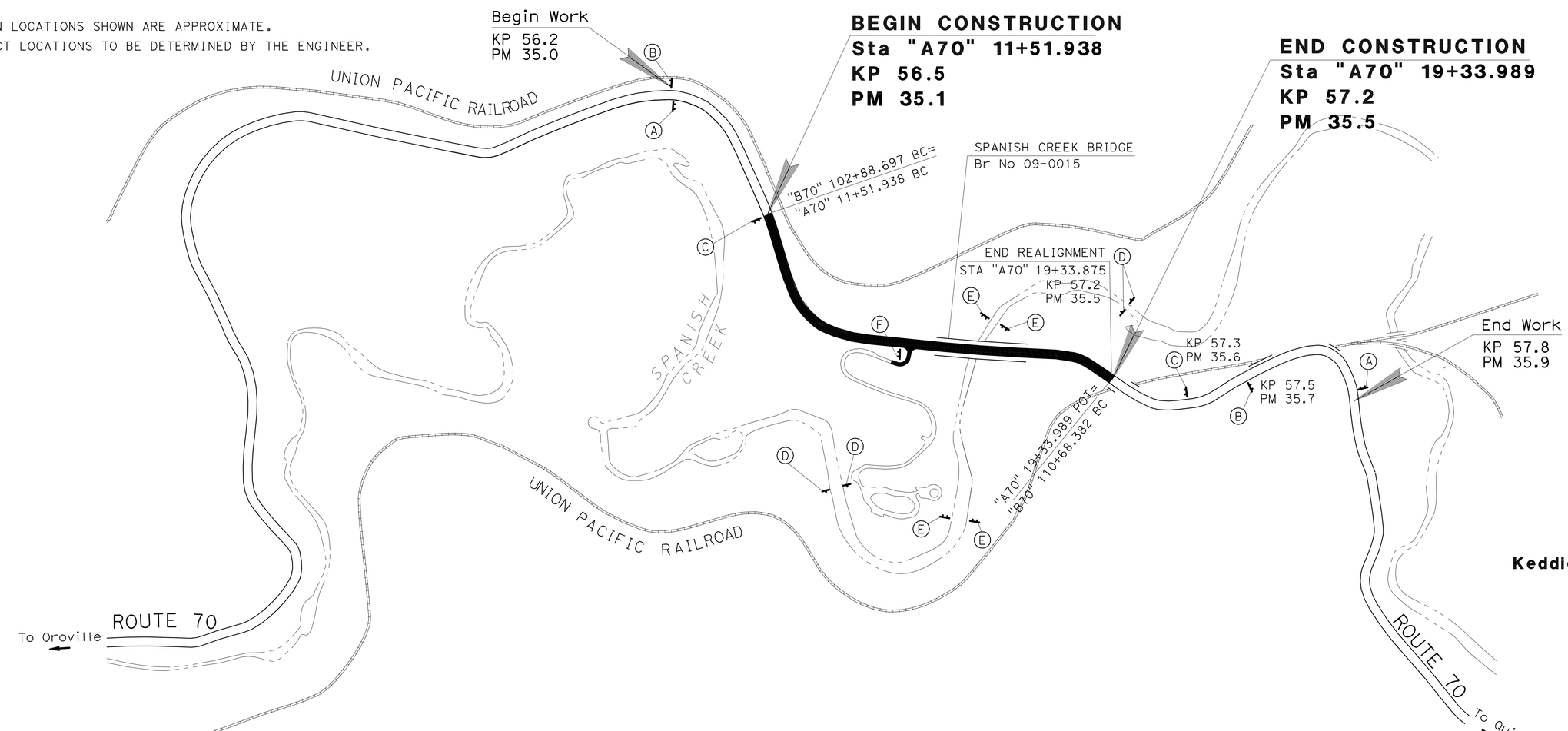

ALL DIMENSIONS ARE IN METERS UNLESS OTHERWISE SHOWN

CONSTRUCTION AREA SIGNS

NO SCALE

THIS PLAN ACCURATE FOR CONSTRUCTION AREA SIGN WORK ONLY

CS-1

STATE OF CALIFORNIA - DEPARTMENT OF TRANSPORTATION
NORTH REGION
OFFICE OF DESIGN, WEST
DESIGN BRANCH S7

Caltrans

FUNCTIONAL SUPERVISOR: CYRUS HUI
CALCULATED-DESIGNED BY: DAVINDER MINHAS
CHECKED BY: CYRUS HUI
REVISED BY
DATE REVISED

LAST REVISION 00-00-00
DATE PLOTTED => 10-NOV-2009
TIME PLOTTED => 07:10

Dist	COUNTY	ROUTE	KILOMETER POST TOTAL PROJECT	SHEET No.	TOTAL SHEETS
02	Plu	70	56.5/57.2	39	149

Davinder Minhas 7-21-09
REGISTERED CIVIL ENGINEER DATE

11-2-09
PLANS APPROVAL DATE

REGISTERED PROFESSIONAL ENGINEER DAVINDER MINHAS No. 70022 Exp. 9-30-10 CIVIL STATE OF CALIFORNIA

THE STATE OF CALIFORNIA OR ITS OFFICERS OR AGENTS SHALL NOT BE RESPONSIBLE FOR THE ACCURACY OR COMPLETENESS OF ELECTRONIC COPIES OF THIS PLAN SHEET.

Caltrans Metric

SP4

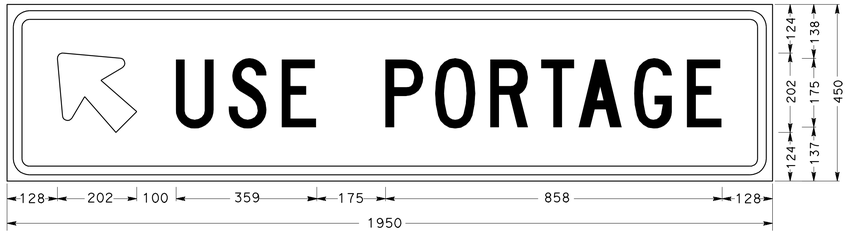

57mm Radius, 22mm Border, 16mm Indent, Black on White;
Arrow 150UC-1L - 243mm 135{; [USE PORTAGE] C;
2 signs total.
1 on the left side of the creek,
both upstream and downstream.

C23B

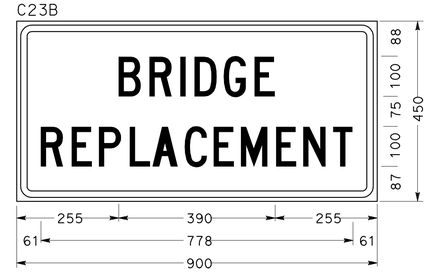

38mm Radius, 16mm Border,
10mm Indent, Black on Orange;
[BRIDGE] C; [REPLACEMENT] C;
2 signs total.

SP3

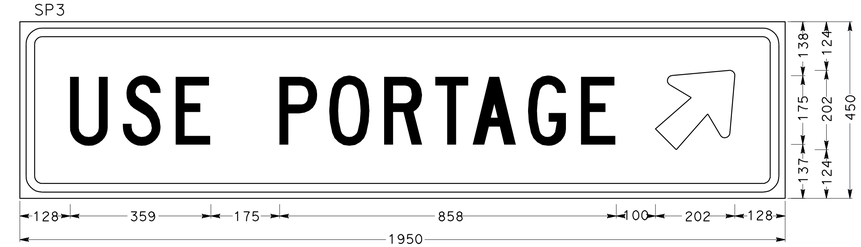

57mm Radius, 22mm Border, 16mm Indent, Black on White;
[USE PORTAGE] C; Arrow 150UC-1L - 243mm 45{;
2 signs total.
1 on the right side of the creek
both upstream and downstream

SP5

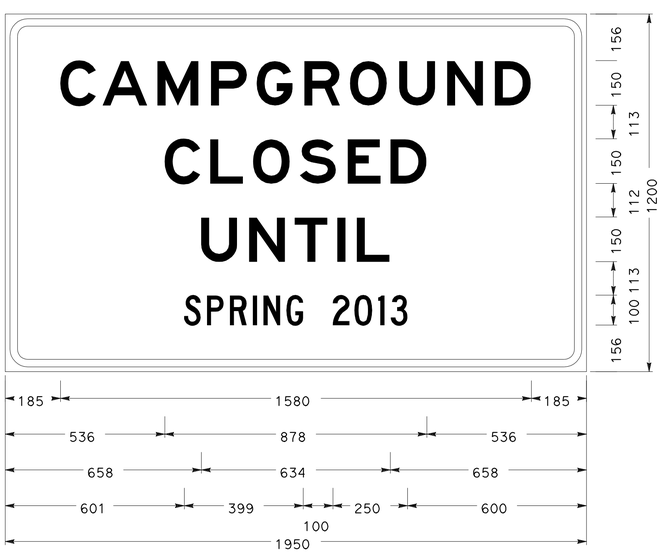

75mm Radius, 25mm Border, 16mm Indent, Black on Orange;
[CAMPGROUND] E; [CLOSED] E; [UNTIL] E;
[SPRING 2013] C;

SP1

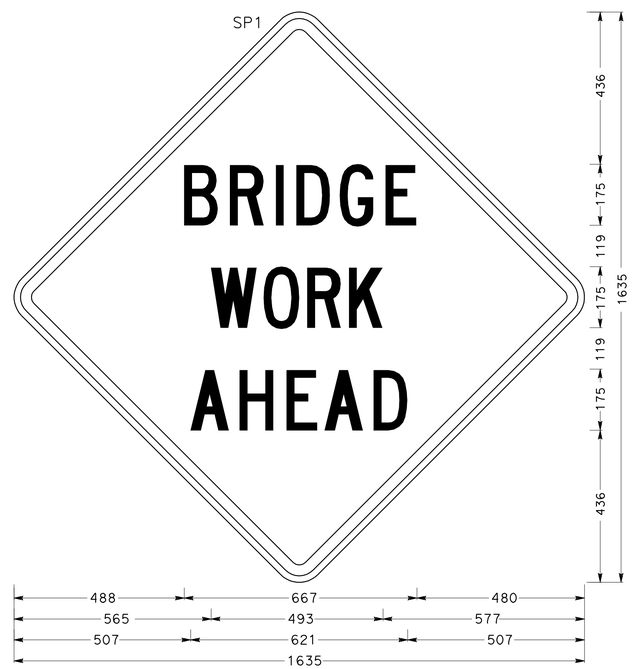

w20-1 std; 1200mm across sides 75mm Radius,
31mm Border, 19mm Indent, Black on Orange;
[BRIDGE] C 91} spacing; [WORK] C 60} spacing; [AHEAD] C;
4 signs total.
1 on each side of the creek,
both upstream and downstream.

SP2

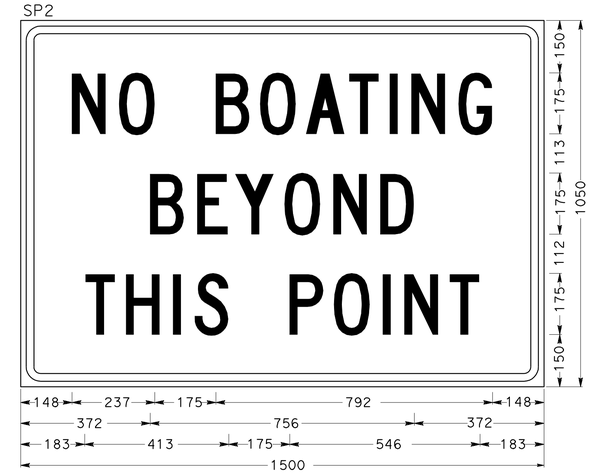

57mm Radius, 22mm Border, 16mm Indent, Black on White;
[NO BOATING] C; [BEYOND] C; [THIS POINT] C;
4 signs total.
1 on each side of the creek,
both upstream and downstream.

ALL DIMENSIONS ARE IN MILLIMETERS
UNLESS OTHERWISE SHOWN

CONSTRUCTION AREA SIGNS

NO SCALE

THIS PLAN ACCURATE FOR CONSTRUCTION AREA SIGN WORK ONLY

CS-2

STATE OF CALIFORNIA - DEPARTMENT OF TRANSPORTATION
NORTH REGION
OFFICE OF DESIGN, WEST
DESIGN BRANCH S7

Caltrans

FUNCTIONAL SUPERVISOR: CYRUS HUI
CALCULATED-DESIGNED BY: DAVINDER MINHAS
CHECKED BY: CYRUS HUI
REVISED BY
DATE REVISED

LAST REVISION 00-00-00
DATE PLOTTED => 10-NOV-2009
TIME PLOTTED => 07:10

Dist	COUNTY	ROUTE	KILOMETER POST TOTAL PROJECT	SHEET No.	TOTAL SHEETS
02	Plu	70	56.5/57.2	40	149

Davinder Minhas 7-21-09
REGISTERED CIVIL ENGINEER DATE

11-2-09
PLANS APPROVAL DATE

REGISTERED PROFESSIONAL ENGINEER DAVINDER MINHAS No. 70022 Exp. 9-30-10 CIVIL STATE OF CALIFORNIA

THE STATE OF CALIFORNIA OR ITS OFFICERS OR AGENTS SHALL NOT BE RESPONSIBLE FOR THE ACCURACY OR COMPLETENESS OF ELECTRONIC COPIES OF THIS PLAN SHEET.

Caltrans Metric

NOTES:

1. FOR COMPLETE RIGHT OF WAY AND ACCURATE ACCESS DATA, SEE RIGHT OF WAY RECORD MAPS AT DISTRICT OFFICE.
2. EXACT LOCATION OF SIGNS DURING STAGE CONSTRUCTION TO BE DETERMINED BY THE ENGINEER.
3. ALL STATIONING BASED ON "A70" LINE UNLESS OTHERWISE NOTED.
4. "B70" ALIGNMENT DOES NOT MATCH Exist CENTERLINE STRIPE EXACTLY.
5. SEE "SUMMARY OF QUANTITIES" SHEET FOR TOTAL QUANTITY.

LEGEND

- NO / P — TEMPORARY TRAFFIC STRIPE DETAIL NUMBER P=PAINT
- DIRECTION OF TRAFFIC
- TEMPORARY RAILING (TYPE K)
- TEMPORARY CRASH CUSHION
- SIGN WITH ONE POST
- SIGN WITH 2 POSTS
- BUILD THIS STAGE
- TEMPORARY SIGNAL
- TEMPORARY FLASHING BEACON
- RESET ROADSIDE SIGN
- 1 SC — 135 mm HMA (TYPE A) 195 mm CLASS 2 AGGREGATE BASE
- REMOVE ROADSIDE SIGN
- X — EXISTING ROADSIDE SIGN NUMBER
- KC "KEEP CLEAR" PAVEMENT MARKING
- S/C SAW-CUT

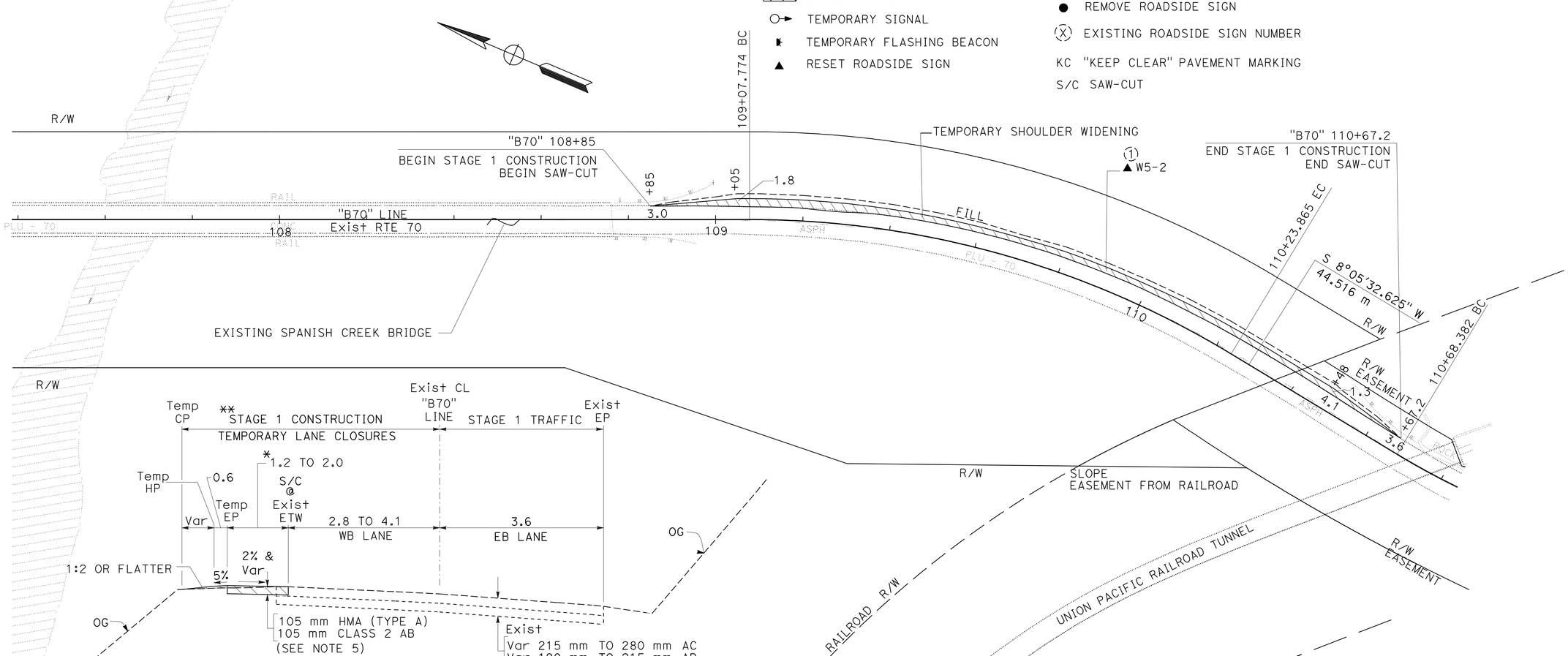

STAGE 1
TEMPORARY SHOULDER WIDENING (WESTBOUND)
"B70" 108+85 TO 110+67.2

* FOR TRANSITIONS NOT SHOWN, SEE STAGE CONSTRUCTION SHEETS

** USE STD PLN T13 TRAFFIC CONTROL

STAGE 1 WORK
TEMPORARY SHOULDER WIDENING UNDER TEMPORARY LANE CLOSURES
"B70" 108+85 TO 110+67.2

ALL DIMENSIONS ARE IN METERS UNLESS OTHERWISE SHOWN

STAGE CONSTRUCTION
STAGE 1
SCALE 1:500

THIS PLAN ACCURATE FOR STAGE CONSTRUCTION WORK ONLY.

SC-1

STATE OF CALIFORNIA - DEPARTMENT OF TRANSPORTATION
NORTH REGION
OFFICE OF DESIGN, WEST
DESIGN BRANCH S7

FUNCTIONAL SUPERVISOR: CYRUS HUI
CALCULATED-DESIGNED BY: DAVINDER MINHAS
CHECKED BY: CYRUS HUI
REVISED BY / DATE REVISED

LAST REVISION 00-00-00 | DATE PLOTTED => 10-NOV-2009 | TIME PLOTTED => 07:10

Dist	COUNTY	ROUTE	KILOMETER POST TOTAL PROJECT	SHEET No.	TOTAL SHEETS
02	Plu	70	56.5/57.2	41	149

Davinder Minhas 7-21-09
REGISTERED CIVIL ENGINEER DATE

11-2-09
PLANS APPROVAL DATE

REGISTERED PROFESSIONAL ENGINEER
DAVINDER MINHAS
No. 70022
Exp. 9-30-10
CIVIL
STATE OF CALIFORNIA

THE STATE OF CALIFORNIA OR ITS OFFICERS OR AGENTS SHALL NOT BE RESPONSIBLE FOR THE ACCURACY OR COMPLETENESS OF ELECTRONIC COPIES OF THIS PLAN SHEET.

Caltrans Metric

NOTE:

1. THIS SIGN SHOWN ON CONSTRUCTION AREA SIGNS SHEET (CS-1).

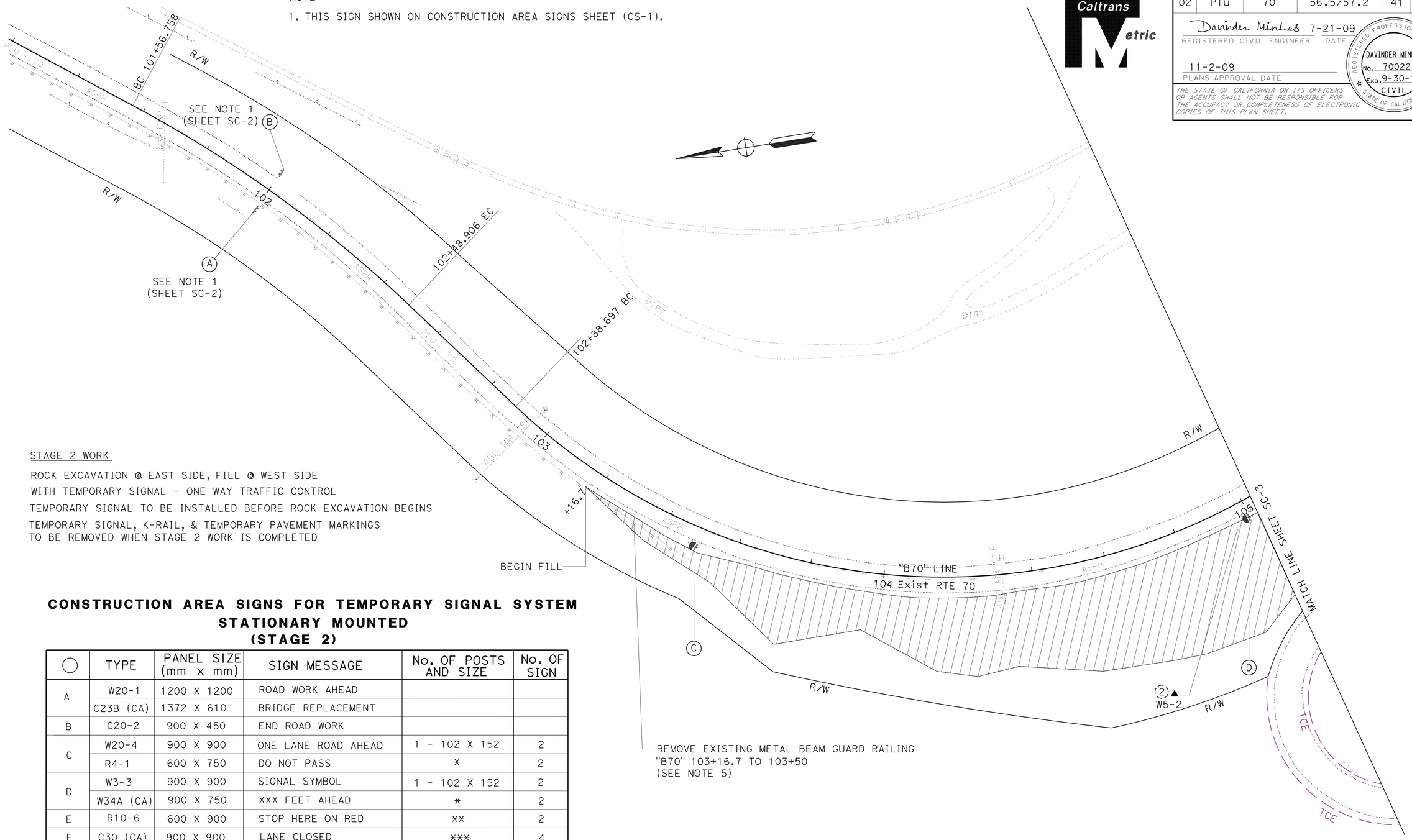

STAGE 2 WORK

ROCK EXCAVATION @ EAST SIDE, FILL @ WEST SIDE
WITH TEMPORARY SIGNAL - ONE WAY TRAFFIC CONTROL
TEMPORARY SIGNAL TO BE INSTALLED BEFORE ROCK EXCAVATION BEGINS
TEMPORARY SIGNAL, K-RAIL, & TEMPORARY PAVEMENT MARKINGS
TO BE REMOVED WHEN STAGE 2 WORK IS COMPLETED

REMOVE EXISTING METAL BEAM GUARD RAILING
"B70" 103+16.7 TO 103+50
(SEE NOTE 5)

CONSTRUCTION AREA SIGNS FOR TEMPORARY SIGNAL SYSTEM STATIONARY MOUNTED (STAGE 2)

◯	TYPE	PANEL SIZE (mm x mm)	SIGN MESSAGE	No. OF POSTS AND SIZE	No. OF SIGN
A	W20-1	1200 X 1200	ROAD WORK AHEAD		
	C23B (CA)	1372 X 610	BRIDGE REPLACEMENT		
B	G20-2	900 X 450	END ROAD WORK		
C	W20-4	900 X 900	ONE LANE ROAD AHEAD	1 - 102 X 152	2
	R4-1	600 X 750	DO NOT PASS	*	2
D	W3-3	900 X 900	SIGNAL SYMBOL	1 - 102 X 152	2
	W34A (CA)	900 X 750	XXX FEET AHEAD	*	2
E	R10-6	600 X 900	STOP HERE ON RED	**	2
F	C30 (CA)	900 X 900	LANE CLOSED	***	4
G	W6-3	900 X 900	TWO-WAY TRAFFIC	1 - 102 X 152	2
H	W1-4R	900 X 900	TURN AND CURVE SYMBOL	1 - 102 X 152	1

* MOUNTED ON POST
** MOUNTED ON POST WITH TRAFFIC SIGNAL
*** MOUNTED ON TYPE III BARRICADES

ALL DIMENSIONS ARE IN METERS
UNLESS OTHERWISE SHOWN

STAGE CONSTRUCTION
STAGE 2
SCALE 1:500

THIS PLAN ACCURATE FOR STAGE CONSTRUCTION WORK ONLY.

SC-2

REVISED BY	DATE REVISED

DAVINDER MINHAS — CALCULATED-DESIGNED BY
CYRUS HUI — CHECKED BY
CYRUS HUI — FUNCTIONAL SUPERVISOR

STATE OF CALIFORNIA - DEPARTMENT OF TRANSPORTATION
NORTH REGION
OFFICE OF DESIGN, WEST
DESIGN BRANCH S7
Caltrans

LAST REVISION 00-00-00 | DATE PLOTTED => 17-NOV-2009 | TIME PLOTTED => 10:53

Dist	COUNTY	ROUTE	KILOMETER POST TOTAL PROJECT	SHEET No.	TOTAL SHEETS
02	Plu	70	56.5/57.2	42	149

Davinder Minhas 7-21-09
REGISTERED CIVIL ENGINEER DATE

11-2-09
PLANS APPROVAL DATE

REGISTERED PROFESSIONAL ENGINEER DAVINDER MINHAS No. 70022 Exp. 9-30-10 CIVIL STATE OF CALIFORNIA

THE STATE OF CALIFORNIA OR ITS OFFICERS OR AGENTS SHALL NOT BE RESPONSIBLE FOR THE ACCURACY OR COMPLETENESS OF ELECTRONIC COPIES OF THIS PLAN SHEET.

Caltrans Metric

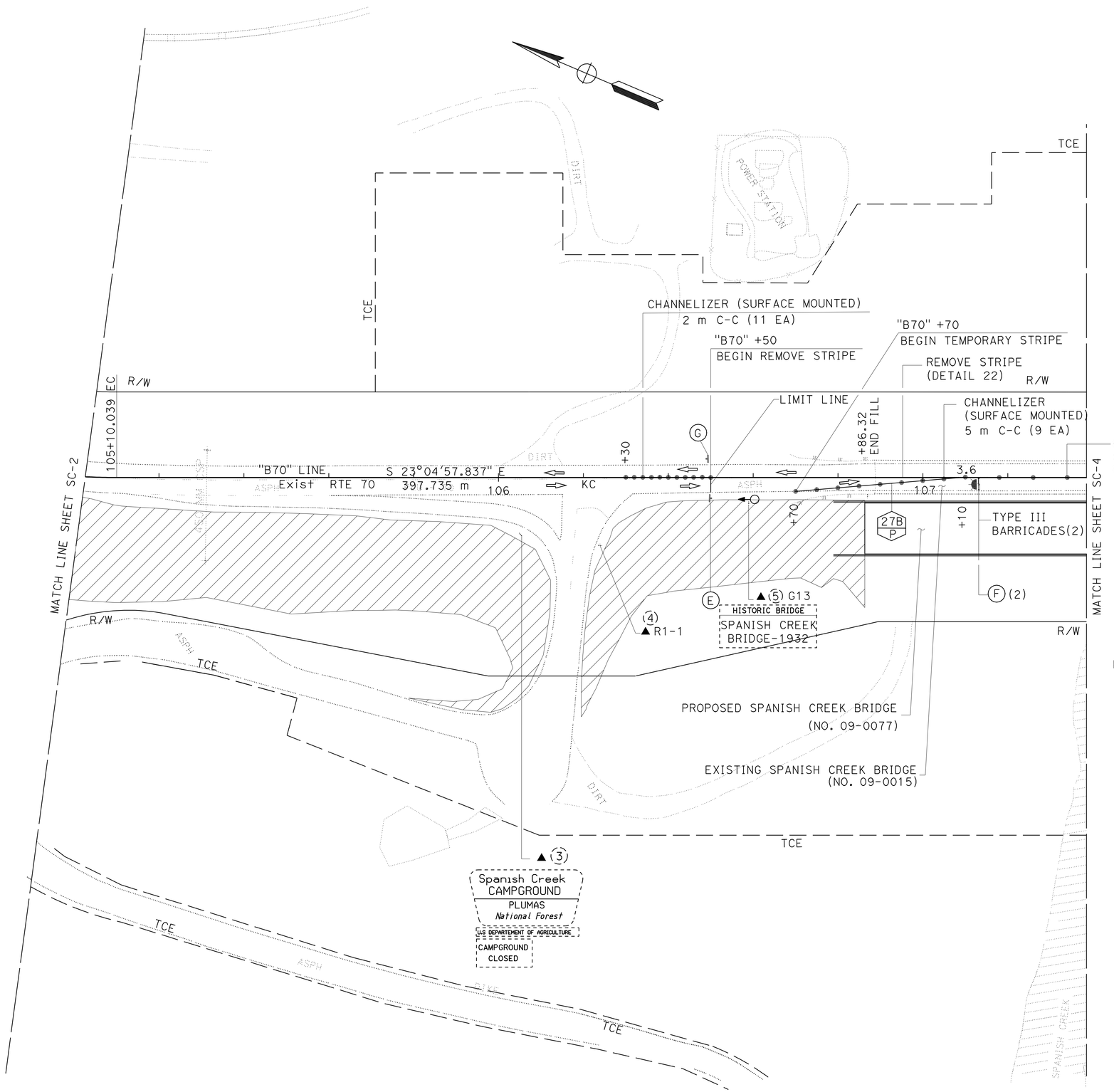

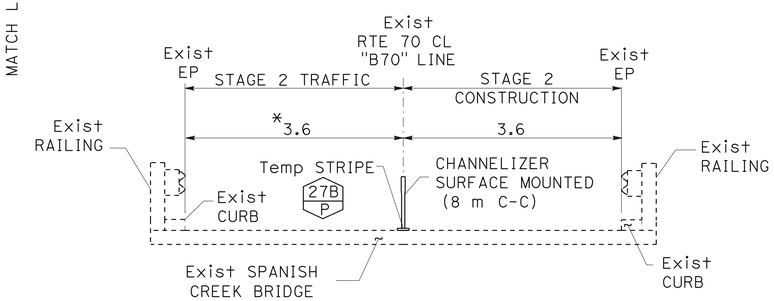

STAGE 2 - TRAFFIC CONTROL ON BRIDGE
"B70" 106+88.7 TO 108+76.3

*ONE-WAY TRAFFIC CONTROL WITH TEMPORARY SIGNAL

THIS PLAN ACCURATE FOR STAGE CONSTRUCTION WORK ONLY.

ALL DIMENSIONS ARE IN METERS
UNLESS OTHERWISE SHOWN

STAGE CONSTRUCTION

STAGE 2

SCALE 1:500

SC-3

REVISED BY	DATE REVISED

CALCULATED-DESIGNED BY: DAVINDER MINHAS
CHECKED BY: CYRUS HUI
FUNCTIONAL SUPERVISOR: CYRUS HUI

STATE OF CALIFORNIA - DEPARTMENT OF TRANSPORTATION
NORTH REGION
OFFICE OF DESIGN, WEST
DESIGN BRANCH S7
Caltrans

LAST REVISION 00-00-00 | DATE PLOTTED => 10-NOV-2009 | TIME PLOTTED => 07:11

Dist	COUNTY	ROUTE	KILOMETER POST TOTAL PROJECT	SHEET No.	TOTAL SHEETS
02	Plu	70	56.5/57.2	43	149

Davinder Minhas 7-21-09
REGISTERED CIVIL ENGINEER DATE

11-2-09
PLANS APPROVAL DATE

REGISTERED PROFESSIONAL ENGINEER DAVINDER MINHAS No. 70022 Exp. 9-30-10 CIVIL STATE OF CALIFORNIA

THE STATE OF CALIFORNIA OR ITS OFFICERS OR AGENTS SHALL NOT BE RESPONSIBLE FOR THE ACCURACY OR COMPLETENESS OF ELECTRONIC COPIES OF THIS PLAN SHEET.

Caltrans Metric

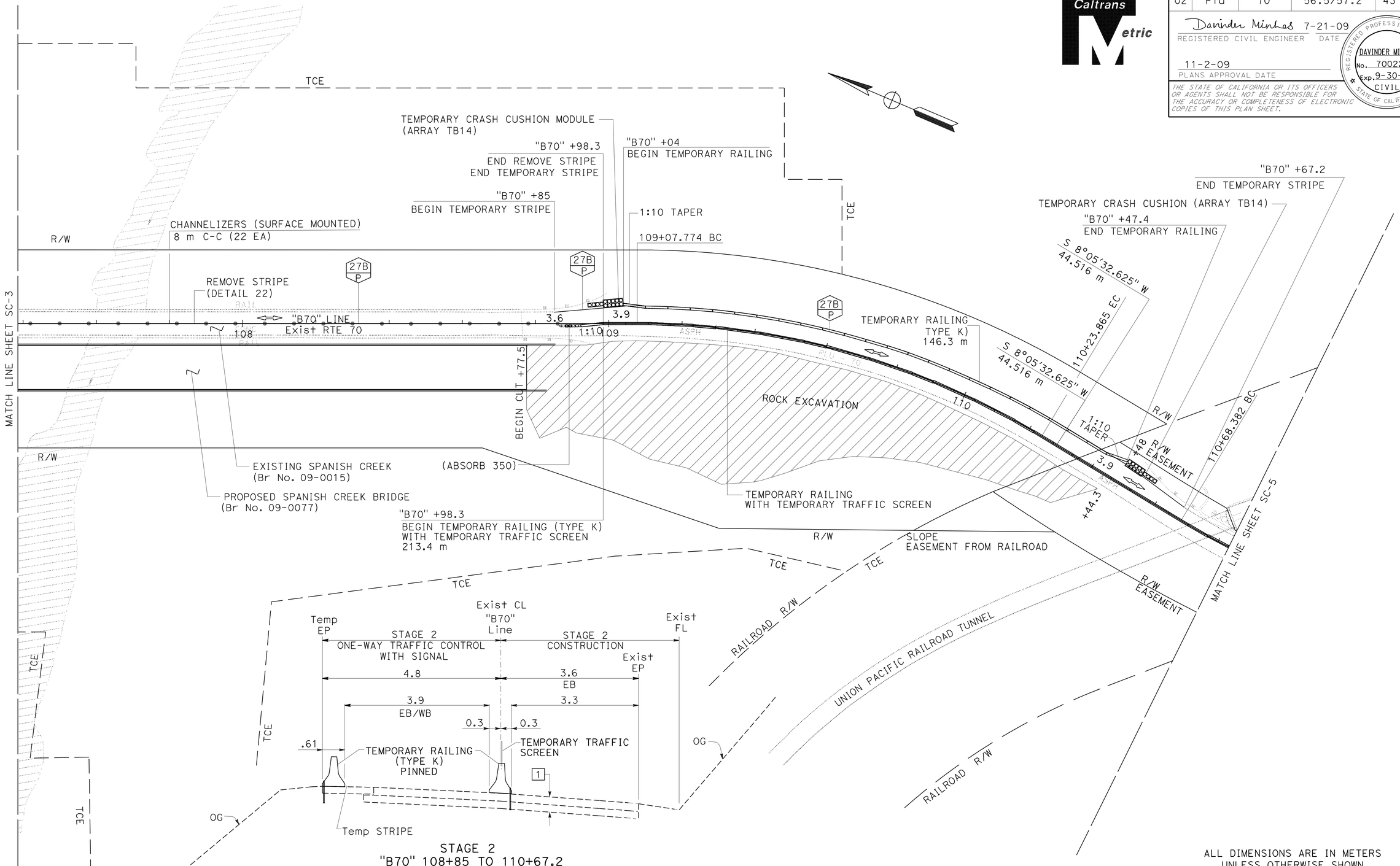

STAGE 2
"B70" 108+85 TO 110+67.2

NOTE: Temp SIGNAL TO BE USED DURING THIS STAGE

ALL DIMENSIONS ARE IN METERS
UNLESS OTHERWISE SHOWN

STAGE CONSTRUCTION
STAGE 2
SCALE 1:500

THIS PLAN ACCURATE FOR STAGE CONSTRUCTION WORK ONLY.

SC-4

REVISED BY	DATE REVISED
DAVINDER MINHAS	CYRUS HUI

CALCULATED-DESIGNED BY: DAVINDER MINHAS
CHECKED BY: CYRUS HUI
FUNCTIONAL SUPERVISOR: CYRUS HUI

STATE OF CALIFORNIA - DEPARTMENT OF TRANSPORTATION
NORTH REGION
OFFICE OF DESIGN, WEST
DESIGN BRANCH 57
Caltrans

LAST REVISION 00-00-00 | DATE PLOTTED => 10-NOV-2009 | TIME PLOTTED => 07:11

Dist	COUNTY	ROUTE	KILOMETER POST TOTAL PROJECT	SHEET No.	TOTAL SHEETS
02	Plu	70	56.5/57.2	44	149

Davinder Minhas 7-21-09
REGISTERED CIVIL ENGINEER DATE

11-2-09
PLANS APPROVAL DATE

REGISTERED PROFESSIONAL ENGINEER
DAVINDER MINHAS
No. 70022
Exp. 9-30-10
CIVIL
STATE OF CALIFORNIA

THE STATE OF CALIFORNIA OR ITS OFFICERS OR AGENTS SHALL NOT BE RESPONSIBLE FOR THE ACCURACY OR COMPLETENESS OF ELECTRONIC COPIES OF THIS PLAN SHEET.

Caltrans Metric

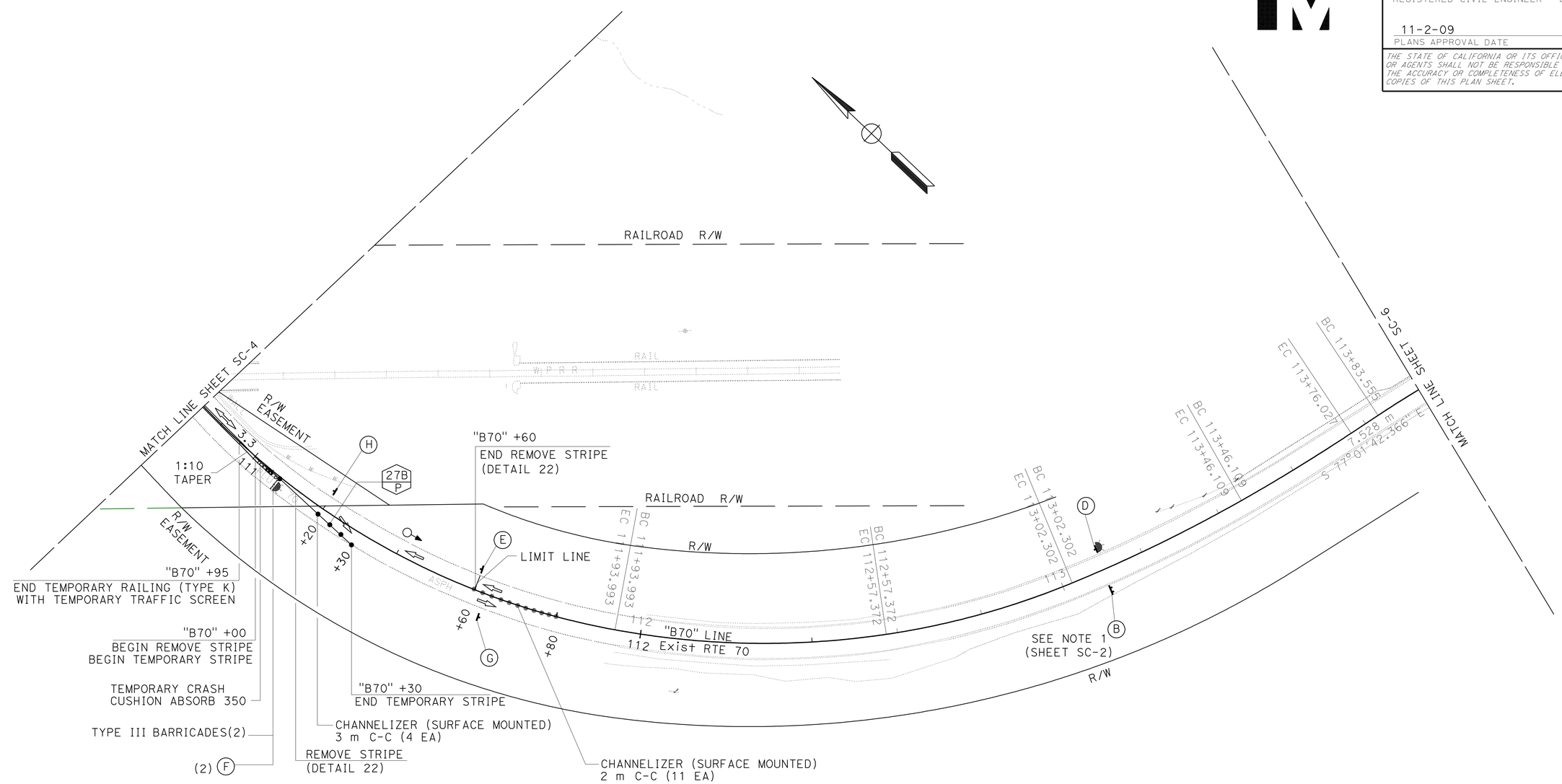

ALL DIMENSIONS ARE IN METERS
UNLESS OTHERWISE SHOWN

STAGE CONSTRUCTION
STAGE 2
SCALE 1:500

THIS PLAN ACCURATE FOR STAGE CONSTRUCTION WORK ONLY.

SC-5

STATE OF CALIFORNIA - DEPARTMENT OF TRANSPORTATION
NORTH REGION
OFFICE OF DESIGN, WEST
DESIGN BRANCH S7

Caltrans

FUNCTIONAL SUPERVISOR: CYRUS HUI
CALCULATED-DESIGNED BY: DAVINDER MINHAS
CHECKED BY: CYRUS HUI
REVISED BY
DATE REVISED

LAST REVISION 00-00-00
DATE PLOTTED => 17-NOV-2009
TIME PLOTTED => 10:54

Dist	COUNTY	ROUTE	KILOMETER POST TOTAL PROJECT	SHEET No.	TOTAL SHEETS
02	Plu	70	56.5/57.2	45	149

Davinder Minhas 7-21-09
REGISTERED CIVIL ENGINEER DATE

11-2-09
PLANS APPROVAL DATE

REGISTERED PROFESSIONAL ENGINEER
DAVINDER MINHAS
No. 70022
Exp. 9-30-10
CIVIL
STATE OF CALIFORNIA

THE STATE OF CALIFORNIA OR ITS OFFICERS OR AGENTS SHALL NOT BE RESPONSIBLE FOR THE ACCURACY OR COMPLETENESS OF ELECTRONIC COPIES OF THIS PLAN SHEET.

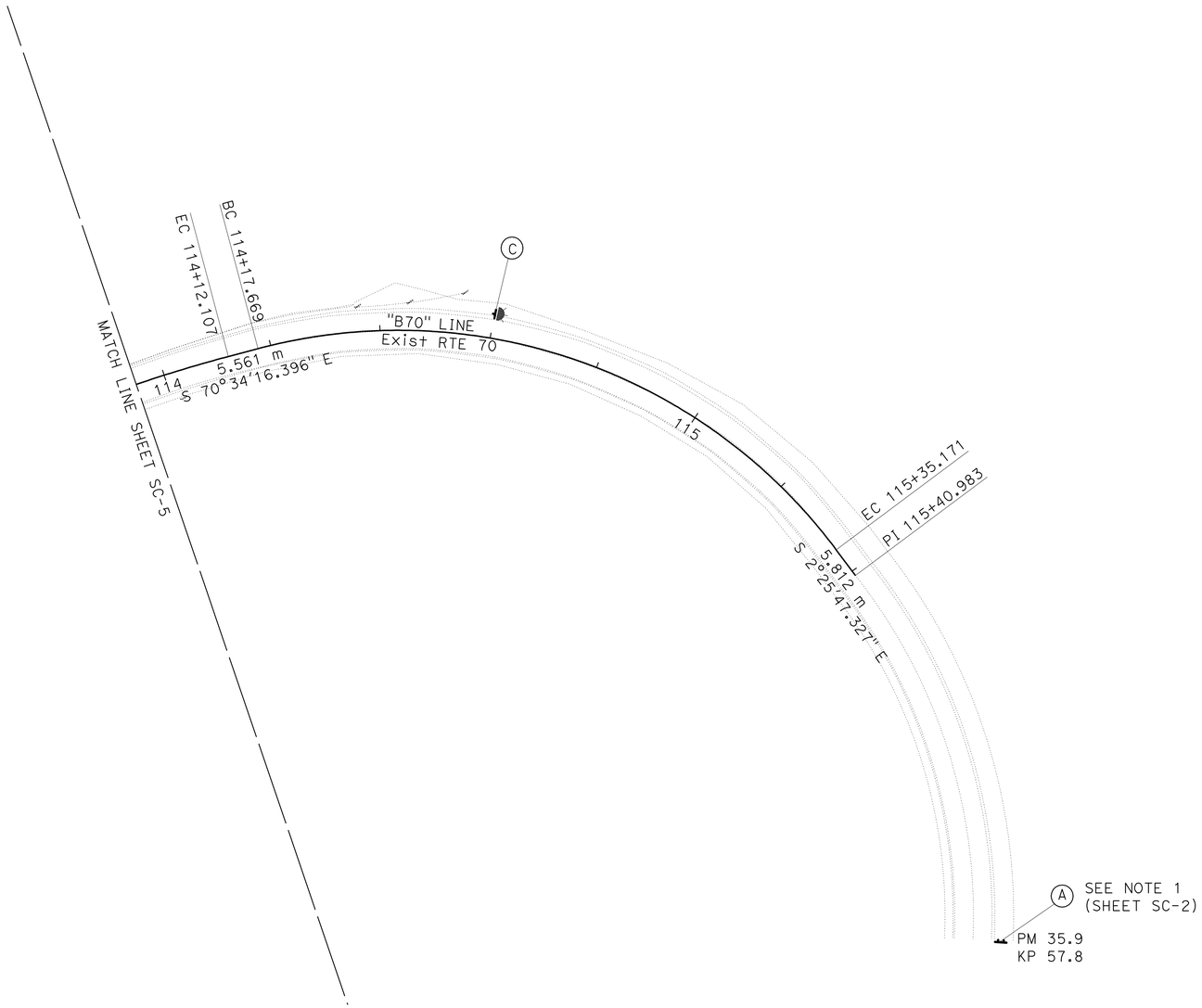

ALL DIMENSIONS ARE IN METERS
UNLESS OTHERWISE SHOWN

STAGE CONSTRUCTION

STAGE 2

SCALE 1:500

THIS PLAN ACCURATE FOR STAGE CONSTRUCTION WORK ONLY.

SC-6

CALCULATED-DESIGNED BY	DAVINDER MINHAS
CHECKED BY	CYRUS HUI
FUNCTIONAL SUPERVISOR	CYRUS HUI
REVISED BY	
DATE REVISED	

STATE OF CALIFORNIA - DEPARTMENT OF TRANSPORTATION
NORTH REGION
OFFICE OF DESIGN, WEST
DESIGN BRANCH S7

LAST REVISION 00-00-00 | DATE PLOTTED => 17-NOV-2009 | TIME PLOTTED => 10:54

Dist	COUNTY	ROUTE	KILOMETER POST TOTAL PROJECT	SHEET No.	TOTAL SHEETS
02	Plu	70	56.5/57.2	46	149

Davinder Minhas 7-21-09
REGISTERED CIVIL ENGINEER DATE

11-2-09
PLANS APPROVAL DATE

REGISTERED PROFESSIONAL ENGINEER
DAVINDER MINHAS
No. 70022
Exp. 9-30-10
CIVIL
STATE OF CALIFORNIA

THE STATE OF CALIFORNIA OR ITS OFFICERS OR AGENTS SHALL NOT BE RESPONSIBLE FOR THE ACCURACY OR COMPLETENESS OF ELECTRONIC COPIES OF THIS PLAN SHEET.

Caltrans Metric

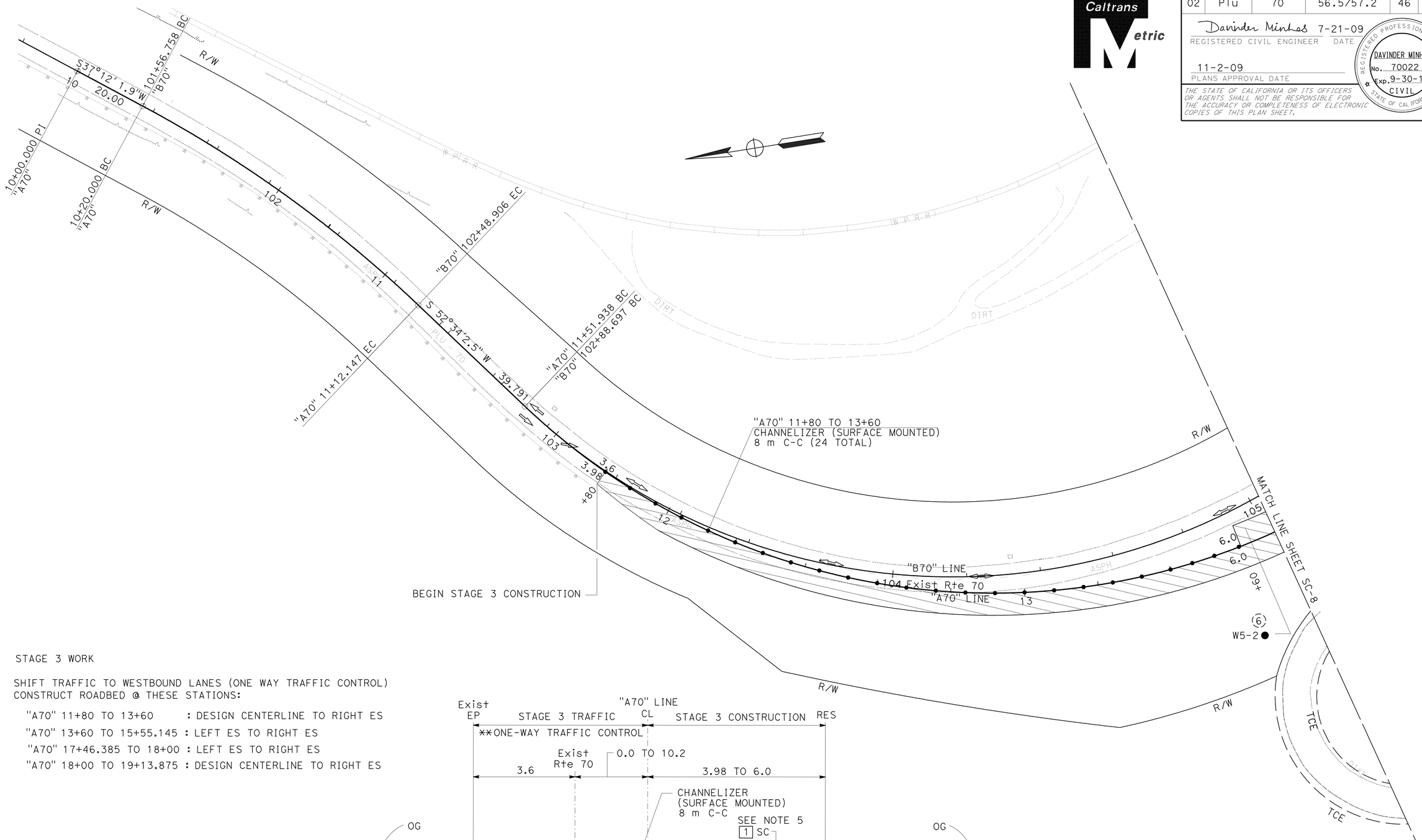

STAGE 3 WORK

SHIFT TRAFFIC TO WESTBOUND LANES (ONE WAY TRAFFIC CONTROL)
CONSTRUCT ROADBED @ THESE STATIONS:

"A70" 11+80 TO 13+60 : DESIGN CENTERLINE TO RIGHT ES
"A70" 13+60 TO 15+55.145 : LEFT ES TO RIGHT ES
"A70" 17+46.385 TO 18+00 : LEFT ES TO RIGHT ES
"A70" 18+00 TO 19+13.875 : DESIGN CENTERLINE TO RIGHT ES

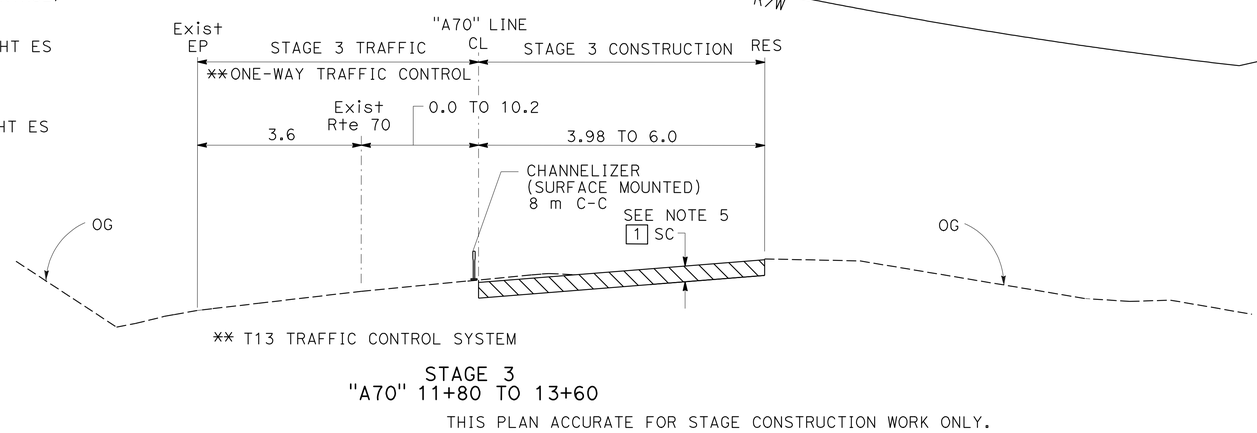

STAGE 3
"A70" 11+80 TO 13+60

THIS PLAN ACCURATE FOR STAGE CONSTRUCTION WORK ONLY.

ALL DIMENSIONS ARE IN METERS
UNLESS OTHERWISE SHOWN

STAGE CONSTRUCTION
STAGE 3
SCALE 1:500

SC-7

DAVINDER MINHAS	REVISED BY
CYRUS HUI	DATE REVISED
CALCULATED-DESIGNED BY	
CHECKED BY	
FUNCTIONAL SUPERVISOR	
CYRUS HUI	

STATE OF CALIFORNIA - DEPARTMENT OF TRANSPORTATION
NORTH REGION
OFFICE OF DESIGN, WEST
DESIGN BRANCH S7
Caltrans

LAST REVISION 00-00-00 | DATE PLOTTED => 10-NOV-2009 | TIME PLOTTED => 07:12

Dist	COUNTY	ROUTE	KILOMETER POST TOTAL PROJECT	SHEET No.	TOTAL SHEETS
02	Plu	70	56.5/57.2	47	149

Davinder Minhas 7-21-09
REGISTERED CIVIL ENGINEER DATE

11-2-09
PLANS APPROVAL DATE

REGISTERED PROFESSIONAL ENGINEER DAVINDER MINHAS No. 70022 Exp. 9-30-10 CIVIL STATE OF CALIFORNIA

THE STATE OF CALIFORNIA OR ITS OFFICERS OR AGENTS SHALL NOT BE RESPONSIBLE FOR THE ACCURACY OR COMPLETENESS OF ELECTRONIC COPIES OF THIS PLAN SHEET.

Caltrans Metric

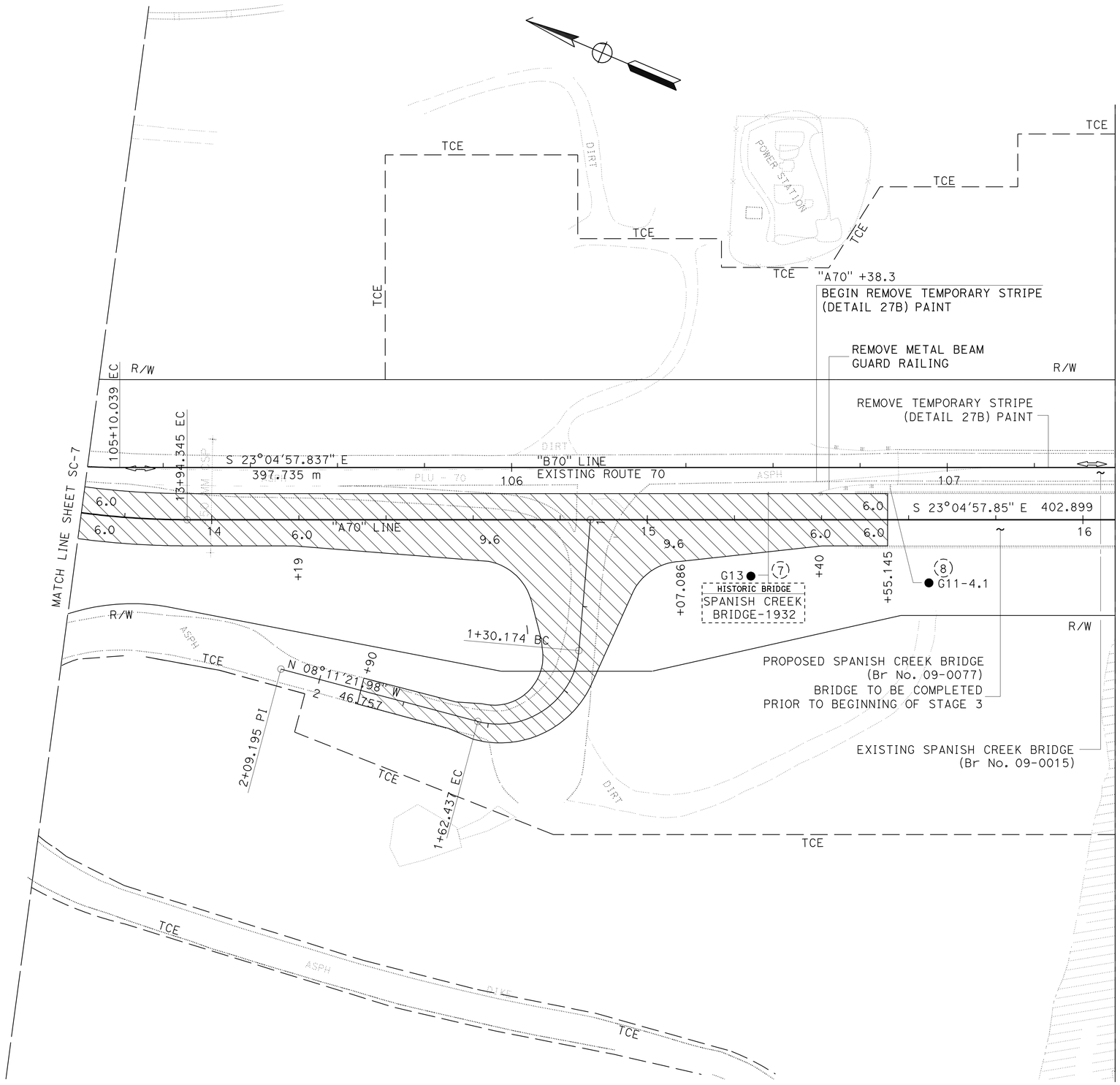

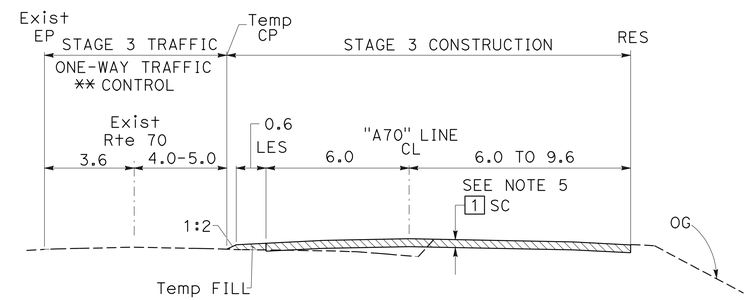

** T13 TRAFFIC CONTROL SYSTEM

STAGE 3
"A70" 13+60 TO 15+55.145

ALL DIMENSIONS ARE IN METERS UNLESS OTHERWISE SHOWN

STAGE CONSTRUCTION
STAGE 3

SCALE 1:500

SC-8

THIS PLAN ACCURATE FOR STAGE CONSTRUCTION WORK ONLY.

REVISED BY	DATE REVISED
DAVINDER MINHAS	CYRUS HUI
CALCULATED-DESIGNED BY	CHECKED BY
FUNCTIONAL SUPERVISOR	CYRUS HUI

STATE OF CALIFORNIA - DEPARTMENT OF TRANSPORTATION
NORTH REGION
OFFICE OF DESIGN, WEST
DESIGN BRANCH 57
Caltrans

LAST REVISION 00-00-00 | DATE PLOTTED => 10-NOV-2009 | TIME PLOTTED => 07:12

Dist	COUNTY	ROUTE	KILOMETER POST TOTAL PROJECT	SHEET No.	TOTAL SHEETS
02	Plu	70	56.5/57.2	48	149

Davinder Minhas 7-21-09
REGISTERED CIVIL ENGINEER DATE

11-2-09
PLANS APPROVAL DATE

REGISTERED PROFESSIONAL ENGINEER
DAVINDER MINHAS
No. 70022
Exp. 9-30-10
CIVIL
STATE OF CALIFORNIA

THE STATE OF CALIFORNIA OR ITS OFFICERS OR AGENTS SHALL NOT BE RESPONSIBLE FOR THE ACCURACY OR COMPLETENESS OF ELECTRONIC COPIES OF THIS PLAN SHEET.

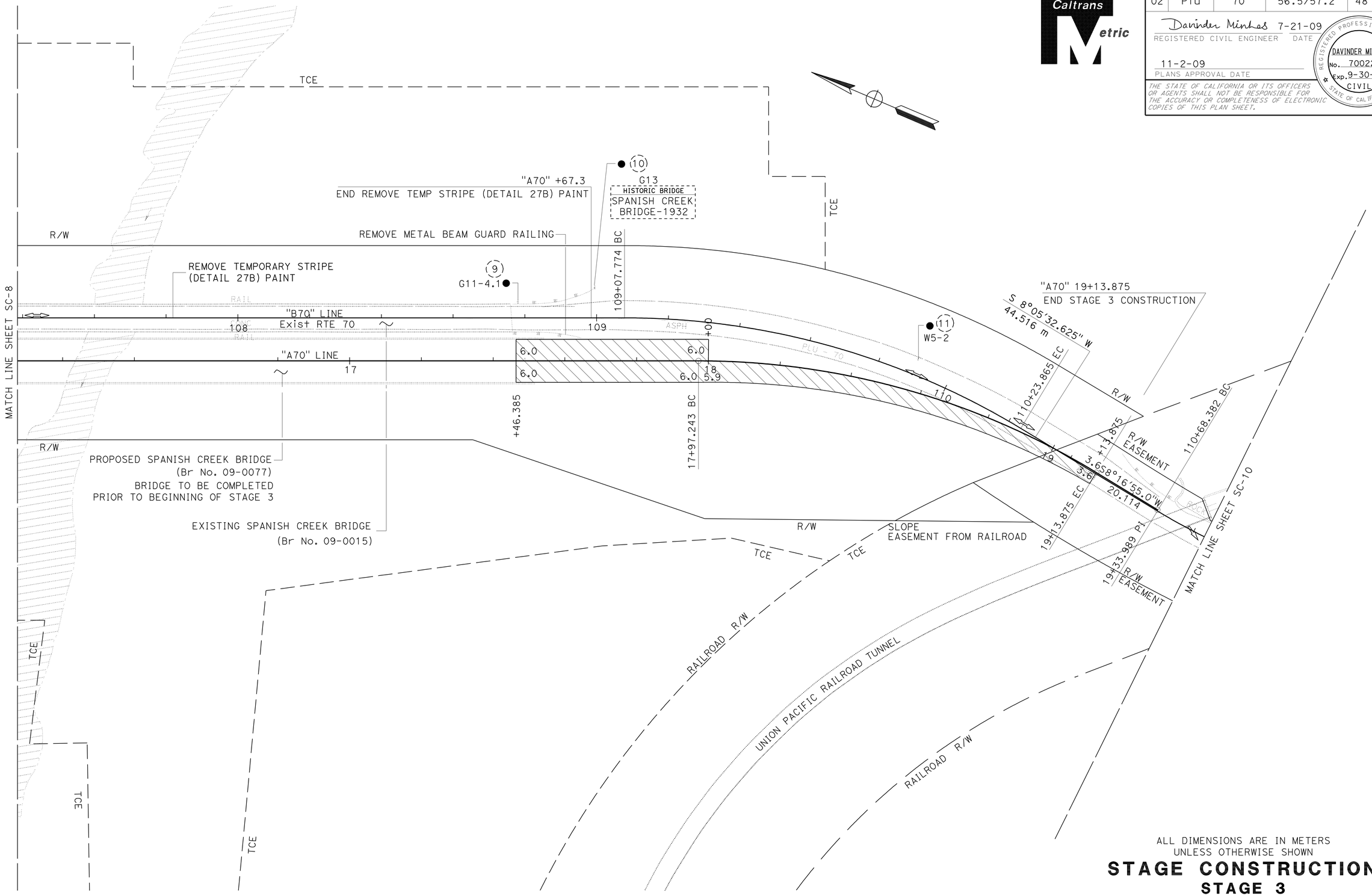

ALL DIMENSIONS ARE IN METERS
UNLESS OTHERWISE SHOWN

STAGE CONSTRUCTION
STAGE 3

SCALE 1:500

THIS PLAN ACCURATE FOR STAGE CONSTRUCTION WORK ONLY.

SC-9

STATE OF CALIFORNIA - DEPARTMENT OF TRANSPORTATION
NORTH REGION
OFFICE OF DESIGN, WEST
DESIGN BRANCH S7

Caltrans

FUNCTIONAL SUPERVISOR: CYRUS HUI
CALCULATED-DESIGNED BY: DAVINDER MINHAS
CHECKED BY: CYRUS HUI
REVISED BY
DATE REVISED

LAST REVISION 00-00-00
DATE PLOTTED => 10-NOV-2009
TIME PLOTTED => 07:12

Dist	COUNTY	ROUTE	KILOMETER POST TOTAL PROJECT	SHEET No.	TOTAL SHEETS
02	Plu	70	56.5/57.2	49	149

Davinder Minhas 7-21-09
REGISTERED CIVIL ENGINEER DATE

11-2-09
PLANS APPROVAL DATE

REGISTERED PROFESSIONAL ENGINEER
DAVINDER MINHAS
No. 70022
Exp. 9-30-10
CIVIL
STATE OF CALIFORNIA

THE STATE OF CALIFORNIA OR ITS OFFICERS OR AGENTS SHALL NOT BE RESPONSIBLE FOR THE ACCURACY OR COMPLETENESS OF ELECTRONIC COPIES OF THIS PLAN SHEET.

Caltrans Metric

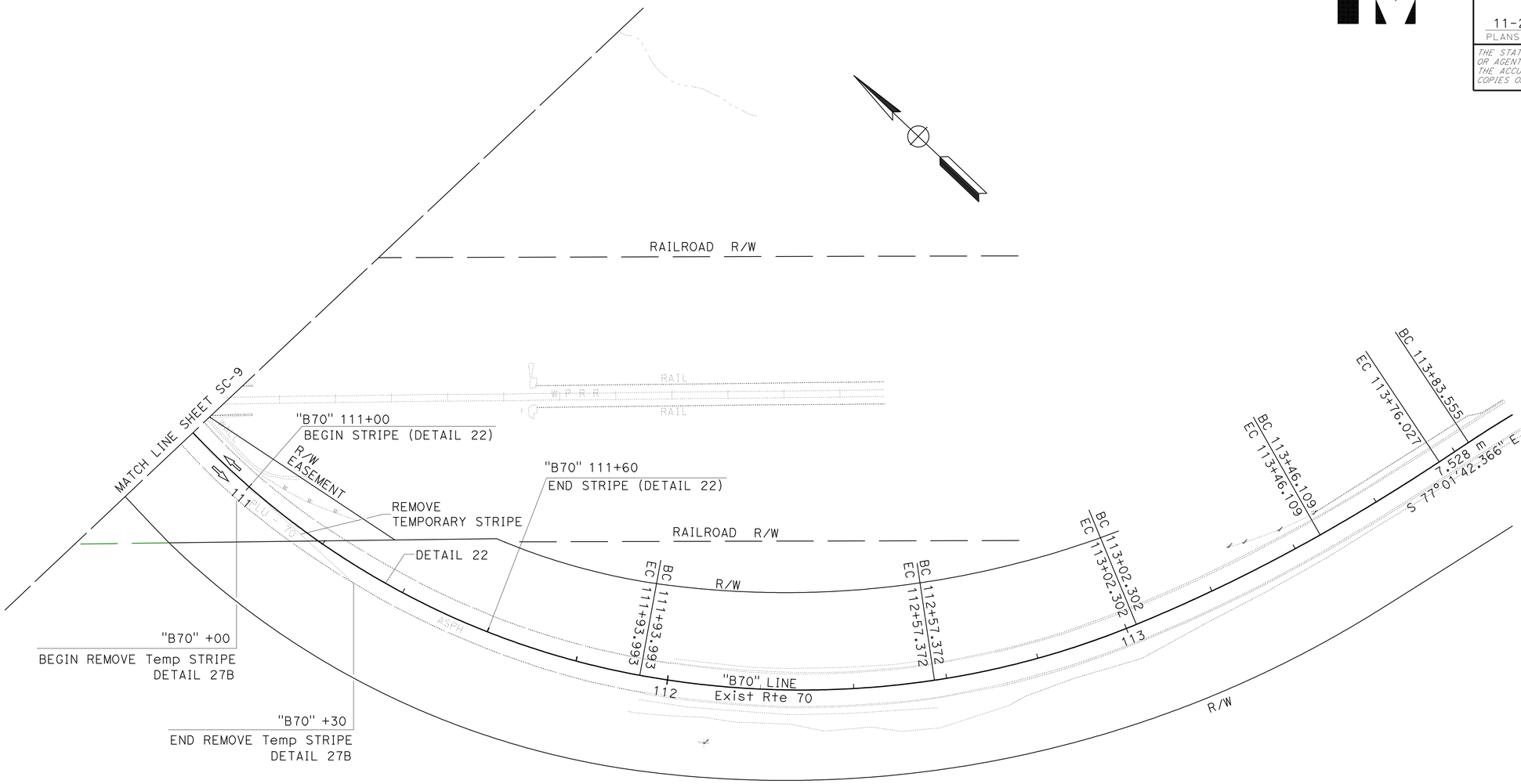

ALL DIMENSIONS ARE IN METERS
UNLESS OTHERWISE SHOWN

STAGE CONSTRUCTION

STAGE 3

SCALE 1:500

THIS PLAN ACCURATE FOR STAGE CONSTRUCTION WORK ONLY.

SC-10

REVISED BY	DATE REVISED
DAVINDER MINHAS	
CYRUS HUI	
CALCULATED-DESIGNED BY	
CHECKED BY	
FUNCTIONAL SUPERVISOR	
CYRUS HUI	

STATE OF CALIFORNIA - DEPARTMENT OF TRANSPORTATION
NORTH REGION
OFFICE OF DESIGN, WEST
DESIGN BRANCH S7
Caltrans

LAST REVISION 00-00-00 | DATE PLOTTED => 10-NOV-2009 | TIME PLOTTED => 07:12

Dist	COUNTY	ROUTE	KILOMETER POST TOTAL PROJECT	SHEET No.	TOTAL SHEETS
02	Plu	70	56.5/57.2	50	149

Davinder Minhas 7-21-09
REGISTERED CIVIL ENGINEER DATE

11-2-09
PLANS APPROVAL DATE

REGISTERED PROFESSIONAL ENGINEER
DAVINDER MINHAS
No. 70022
Exp. 9-30-10
CIVIL
STATE OF CALIFORNIA

THE STATE OF CALIFORNIA OR ITS OFFICERS OR AGENTS SHALL NOT BE RESPONSIBLE FOR THE ACCURACY OR COMPLETENESS OF ELECTRONIC COPIES OF THIS PLAN SHEET.

Caltrans Metric

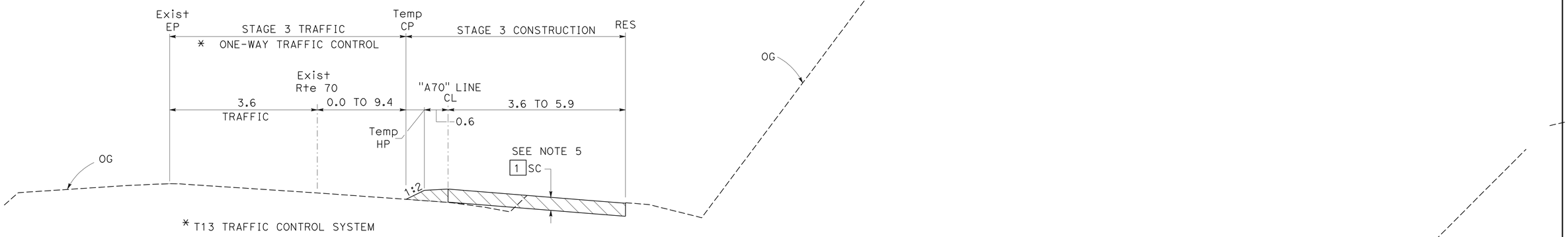

STAGE 3
"A70" 18+00 TO 19+13.875

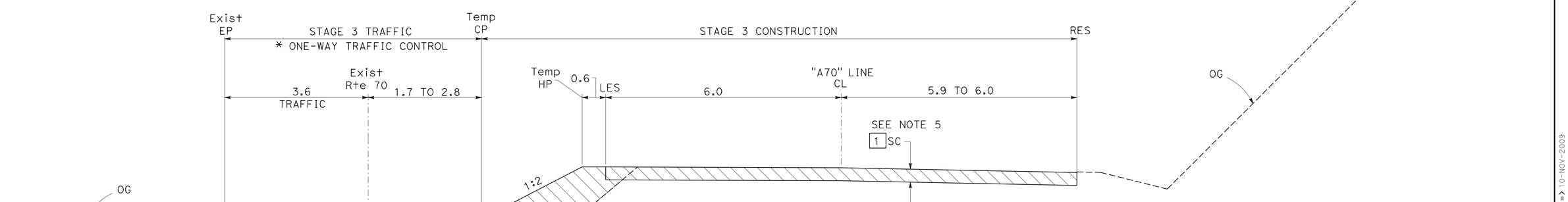

STAGE 3
"A70" 17+46.385 TO 18+00

ALL DIMENSIONS ARE IN METERS
UNLESS OTHERWISE SHOWN.

STAGE CONSTRUCTION
STAGE 3
SCALE 1:500

THIS PLAN ACCURATE FOR STAGE CONSTRUCTION WORK ONLY.

SC-11

REVISED BY	DATE REVISED
DAVINDER MINHAS	
CYRUS HUI	
CALCULATED-DESIGNED BY	CHECKED BY
FUNCTIONAL SUPERVISOR	
CYRUS HUI	

STATE OF CALIFORNIA - DEPARTMENT OF TRANSPORTATION
NORTH REGION
OFFICE OF DESIGN, WEST
DESIGN BRANCH S7
Caltrans

LAST REVISION 00-00-00 | DATE PLOTTED => 10-NOV-2009 | TIME PLOTTED => 07:12

Dist	COUNTY	ROUTE	KILOMETER POST TOTAL PROJECT	SHEET No.	TOTAL SHEETS
02	Plu	70	56.5/57.2	51	149

Davinder Minhas 7-21-09
REGISTERED CIVIL ENGINEER DATE

11-2-09
PLANS APPROVAL DATE

REGISTERED PROFESSIONAL ENGINEER
DAVINDER MINHAS
No. 70022
Exp. 9-30-10
CIVIL
STATE OF CALIFORNIA

THE STATE OF CALIFORNIA OR ITS OFFICERS OR AGENTS SHALL NOT BE RESPONSIBLE FOR THE ACCURACY OR COMPLETENESS OF ELECTRONIC COPIES OF THIS PLAN SHEET.

Caltrans Metric

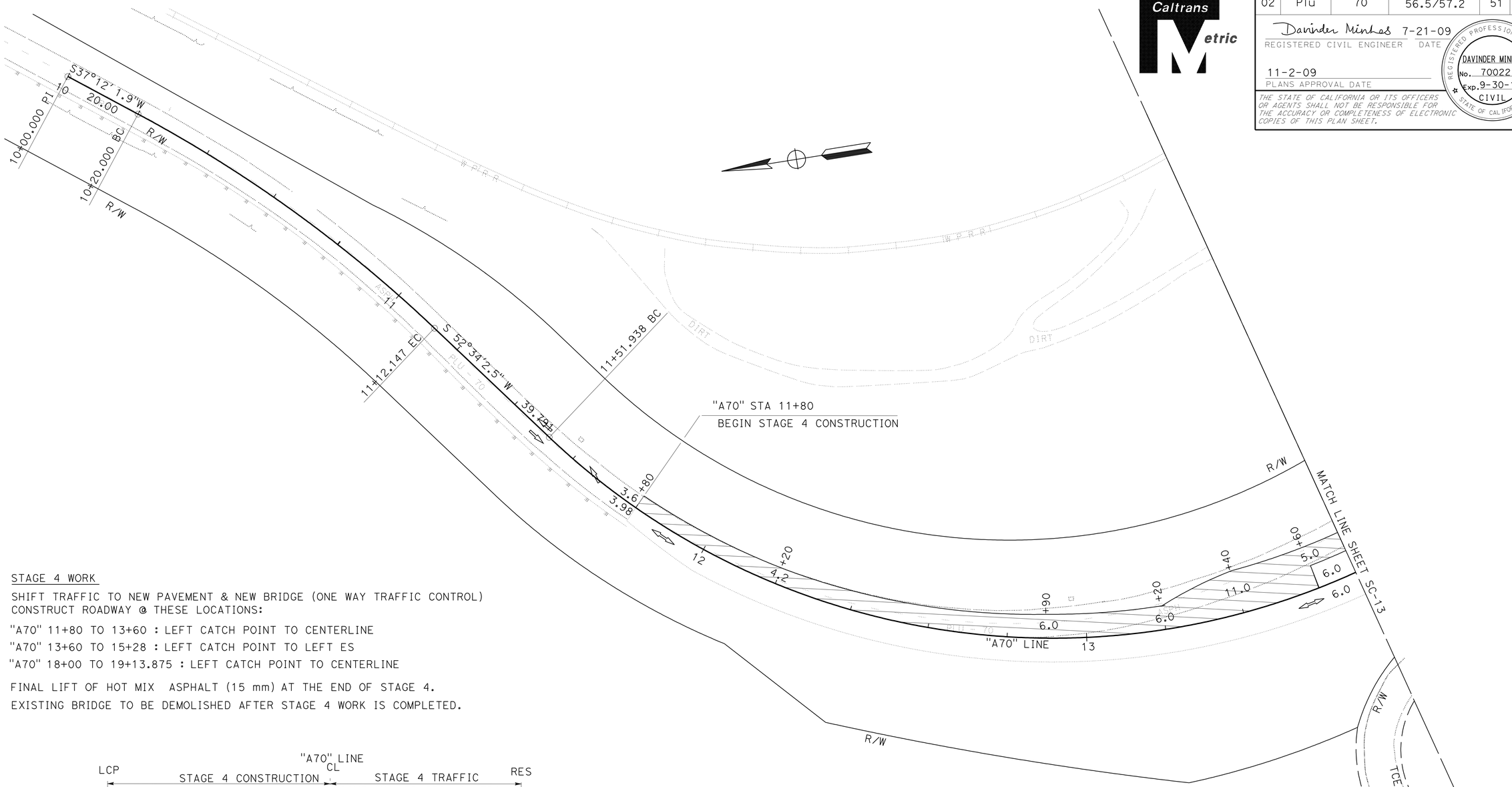

STAGE 4 WORK

SHIFT TRAFFIC TO NEW PAVEMENT & NEW BRIDGE (ONE WAY TRAFFIC CONTROL)
CONSTRUCT ROADWAY @ THESE LOCATIONS:

"A70" 11+80 TO 13+60 : LEFT CATCH POINT TO CENTERLINE

"A70" 13+60 TO 15+28 : LEFT CATCH POINT TO LEFT ES

"A70" 18+00 TO 19+13.875 : LEFT CATCH POINT TO CENTERLINE

FINAL LIFT OF HOT MIX ASPHALT (15 mm) AT THE END OF STAGE 4.

EXISTING BRIDGE TO BE DEMOLISHED AFTER STAGE 4 WORK IS COMPLETED.

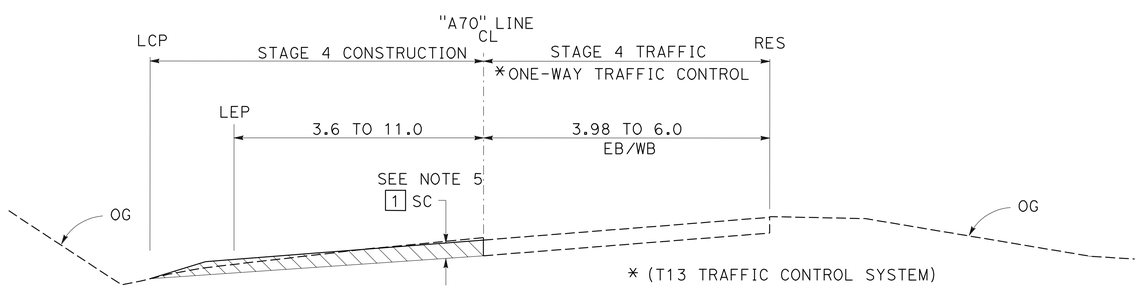

STAGE 4
"A70" 11+80 TO 13+60

ALL DIMENSIONS ARE IN METERS
UNLESS OTHERWISE SHOWN

STAGE CONSTRUCTION
STAGE 4
SCALE 1:500

THIS PLAN ACCURATE FOR STAGE CONSTRUCTION WORK ONLY.

SC-12

STATE OF CALIFORNIA - DEPARTMENT OF TRANSPORTATION
NORTH REGION
OFFICE OF DESIGN, WEST
DESIGN BRANCH S7
Caltrans

CALCULATED-DESIGNED BY	DAVINDER MINHAS	REVISED BY	
CHECKED BY	CYRUS HUI	DATE REVISED	
FUNCTIONAL SUPERVISOR	CYRUS HUI		

LAST REVISION 00-00-00
DATE PLOTTED => 10-NOV-2009
TIME PLOTTED => 07:12

Dist	COUNTY	ROUTE	KILOMETER POST TOTAL PROJECT	SHEET No.	TOTAL SHEETS
02	Plu	70	56.5/57.2	52	149

Davinder Minhas 7-21-09
REGISTERED CIVIL ENGINEER DATE

11-2-09
PLANS APPROVAL DATE

REGISTERED PROFESSIONAL ENGINEER
DAVINDER MINHAS
No. 70022
Exp. 9-30-10
CIVIL
STATE OF CALIFORNIA

THE STATE OF CALIFORNIA OR ITS OFFICERS OR AGENTS SHALL NOT BE RESPONSIBLE FOR THE ACCURACY OR COMPLETENESS OF ELECTRONIC COPIES OF THIS PLAN SHEET.

Caltrans Metric

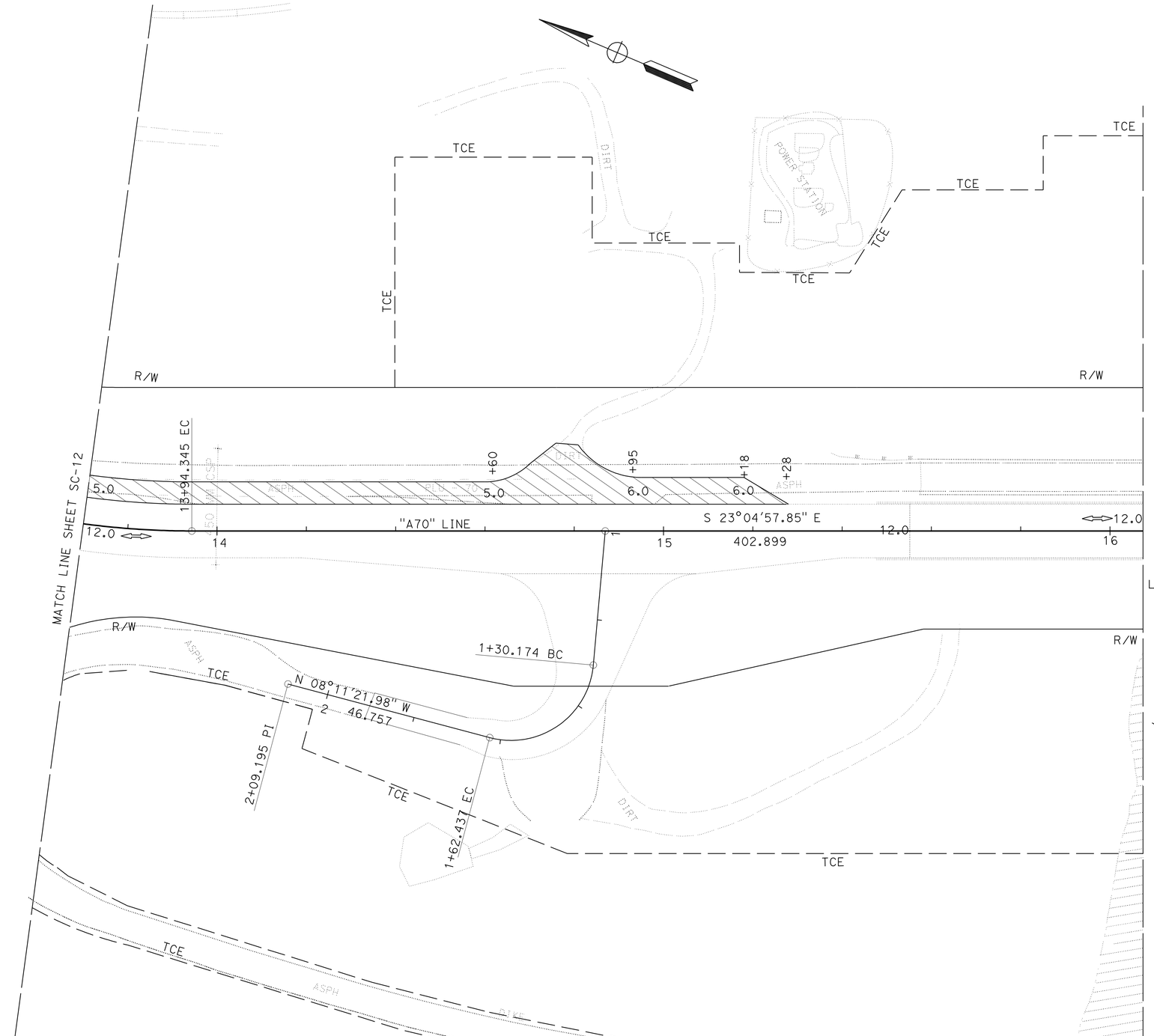

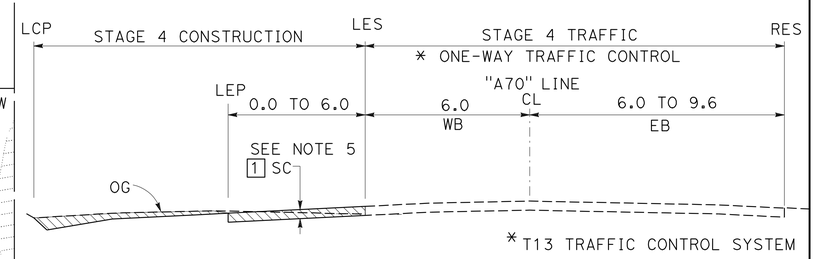

STAGE 4
"A70" 13+60 TO 15+28

ALL DIMENSIONS ARE IN METERS
UNLESS OTHERWISE SHOWN

STAGE CONSTRUCTION
STAGE 4
SCALE 1:500

THIS PLAN ACCURATE FOR STAGE CONSTRUCTION WORK ONLY.

SC-13

REVISED BY	DATE REVISED

CALCULATED-DESIGNED BY	DAVINDER MINHAS
CHECKED BY	CYRUS HUI
FUNCTIONAL SUPERVISOR	CYRUS HUI

STATE OF CALIFORNIA - DEPARTMENT OF TRANSPORTATION
NORTH REGION
OFFICE OF DESIGN, WEST
DESIGN BRANCH S7
Caltrans

LAST REVISION 00-00-00 | DATE PLOTTED => 10-NOV-2009 | TIME PLOTTED => 07:13

Dist	COUNTY	ROUTE	KILOMETER POST TOTAL PROJECT	SHEET No.	TOTAL SHEETS
02	Plu	70	56.5/57.2	53	149

Davinder Minhas 7-21-09
REGISTERED CIVIL ENGINEER DATE

11-2-09
PLANS APPROVAL DATE

REGISTERED PROFESSIONAL ENGINEER
DAVINDER MINHAS
No. 70022
Exp. 9-30-10
CIVIL
STATE OF CALIFORNIA

THE STATE OF CALIFORNIA OR ITS OFFICERS OR AGENTS SHALL NOT BE RESPONSIBLE FOR THE ACCURACY OR COMPLETENESS OF ELECTRONIC COPIES OF THIS PLAN SHEET.

Caltrans Metric

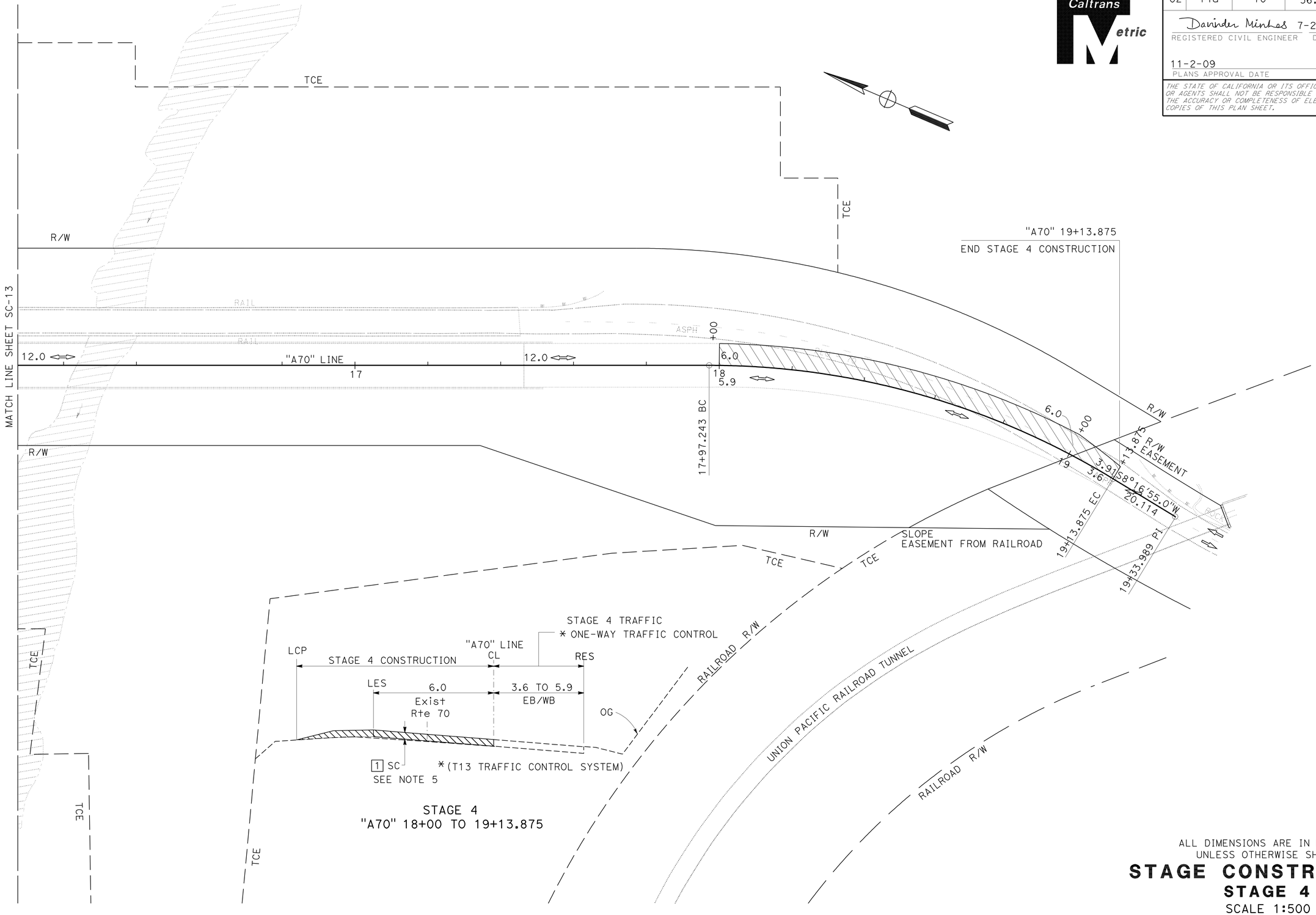

ALL DIMENSIONS ARE IN METERS
UNLESS OTHERWISE SHOWN

STAGE CONSTRUCTION
STAGE 4
SCALE 1:500

THIS PLAN ACCURATE FOR STAGE CONSTRUCTION WORK ONLY.

SC-14

REVISED BY	DATE REVISED

CALCULATED-DESIGNED BY	DAVINDER MINHAS
CHECKED BY	CYRUS HUI
FUNCTIONAL SUPERVISOR	CYRUS HUI

STATE OF CALIFORNIA - DEPARTMENT OF TRANSPORTATION
Caltrans
NORTH REGION
OFFICE OF DESIGN, WEST
DESIGN BRANCH S7

LAST REVISION 00-00-00
DATE PLOTTED => 10-NOV-2009
TIME PLOTTED => 07:13

Dist	COUNTY	ROUTE	KILOMETER POST TOTAL PROJECT	SHEET No.	TOTAL SHEETS
02	Plu	70	56.5/57.2	54	149

Davinder Minhas 7-21-09
REGISTERED CIVIL ENGINEER DATE

11-2-09
PLANS APPROVAL DATE

REGISTERED PROFESSIONAL ENGINEER DAVINDER MINHAS No. 70022 Exp. 9-30-10 CIVIL STATE OF CALIFORNIA

THE STATE OF CALIFORNIA OR ITS OFFICERS OR AGENTS SHALL NOT BE RESPONSIBLE FOR THE ACCURACY OR COMPLETENESS OF ELECTRONIC COPIES OF THIS PLAN SHEET.

Caltrans Metric

TEMPORARY TRAFFIC STRIPE

STAGE	SHEET	TEMPORARY TRAFFIC STRIPE (PAINT)
		WHITE
		DETAIL 27B 100 mm
		m
2	SC-3	69
2	SC-4	342
2	SC-5	31
TOTAL		442

TEMPORARY PAVEMENT MARKING (PAINT)

STAGE	SHEET NUMBER	DESCRIPTION	NUMBER	TEMPORARY PAVEMENT MARKING
				m^2
2	SC-3	"KEEP CLEAR"	1 @ 4.74 m^2	4.74
2	SC-3	LIMIT LINE	1 @ 1.08 m^2	1.08
2	SC-5	LIMIT LINE	1 @ 1.08 m^2	1.08
			TOTAL	6.90

REMOVE TRAFFIC STRIPE

STAGE	SHEET	REMOVE YELLOW THERMOPLASTIC TRAFFIC STRIPE (HAZARDOUS WASTE)	REMOVE THERMOPLASTIC TRAFFIC STRIPE	REMOVE PAINTED TRAFFIC STRIPE
		YELLOW	WHITE	WHITE
		m	m	m
2	SC-3	177		
2	SC-4	320		
2	SC-5	120		
3	SC-8			69
3	SC-9			160
3	SC-10			31
FROM SHEET PDQ-1		96	96	
TOTAL		713	96	260

TEMPORARY RAILING (TYPE K)/ TEMPORARY TRAFFIC SCREEN

STAGE	STATION	TEMPORARY RAILING (TYPE K)	TEMPORARY TRAFFIC SCREEN
		m	m
2	"B70" 108+98.3 TO 110+95	213.4	213.4
2	"B70" 109+04 TO 110+47.4	146.3	
	TOTAL	359.7	213.4

PORTABLE CHANGEABLE MESSAGE SIGN

STAGE	PORTABE CHANGEABLE MESSAGE SIGN
	EA
1	4
2	
3	
4	
TOTAL	4

REMOVE/RESET ROADSIDE SIGN

STAGE	SHEET NUMBER	SIGN NO. (X)	SIGN CODE	RESET ROADSIDE SIGN	REMOVE ROADSIDE SIGN (WOOD-POST)	COMMENTS
				EA	EA	
1	SC-1	1	W5-2	1		"NARROW BRIDGE"
2	SC-2	2	W5-2	1		"NARROW BRIDGE"
2	SC-3	3		1		CAMPRGROUND INFORMATION SIGN
2	SC-3	4	R1-1	1		"STOP"
2	SC-3	5	G13	1		HISTORIC BRIDGE SIGN
3	SC-7	6	W5-2		1	"NARROW BRIDGE"
3	SC-8	7	G13		1	HISTORIC BRIDGE SIGN
3	SC-8	8	G11-4.1		1	BRIDGE INVENTORY SIGN
3	SC-9	9	G11-4.1		1	BRIDGE INVENTORY SIGN
3	SC-9	10	G13		1	HISTORIC BRIDGE SIGN
3	SC-9	11	W5-2		1	"NARROW BRIDGE"
			TOTAL	5	6	

TRAFFIC HANDLING ITEMS

STAGE	SHEET NUMBER	TEMPORARY CRASH CUSHION (ABSORB 350)	TEMPORARY CRASH CUSHION MODULE TB14	TYPE III BARRICADE	CHANNELIZER (SURFACE MOUNTED)
		EA	EA	EA	EA
2	SC-3			2	23
2	SC-4	1	28		19
2	SC-5	1		2	15
3	SC-7				24
TOTAL		2	28	4	81

STAGE CONSTRUCTION QUANTITIES

SCQ-1

STATE OF CALIFORNIA - DEPARTMENT OF TRANSPORTATION
NORTH REGION
OFFICE OF DESIGN, WEST
DESIGN BRANCH S7
Caltrans

FUNCTIONAL SUPERVISOR: CYRUS HUI
CALCULATED-DESIGNED BY: DAVINDER MINHAS
CHECKED BY: CYRUS HUI
REVISED BY
DATE REVISED

LAST REVISION 00-00-00
DATE PLOTTED => 10-NOV-2009
TIME PLOTTED => 07:13

Dist	COUNTY	ROUTE	KILOMETER POST TOTAL PROJECT	SHEET No.	TOTAL SHEETS
02	Plu	70	56.5/57.2	55	149

Davinder Minhas 7-21-09
REGISTERED CIVIL ENGINEER DATE

11-2-09
PLANS APPROVAL DATE

REGISTERED PROFESSIONAL ENGINEER
DAVINDER MINHAS
No. 70022
Exp. 9-30-10
CIVIL
STATE OF CALIFORNIA

THE STATE OF CALIFORNIA OR ITS OFFICERS OR AGENTS SHALL NOT BE RESPONSIBLE FOR THE ACCURACY OR COMPLETENESS OF ELECTRONIC COPIES OF THIS PLAN SHEET.

Caltrans Metric

LEGEND

- LIMITS OF STRIPING PATTERN
- STRIPE CHANGE LOCATION
- DELINEATOR (CLASS 2) OR OBJECT MARKER
- s DELINEATOR SPACING
- (Sht-No.) NEW ROADSIDE SIGN (WITH NUMBERS)
- S "STOP" PAVEMENT MARKING
- HIGHWAY POST MARKER

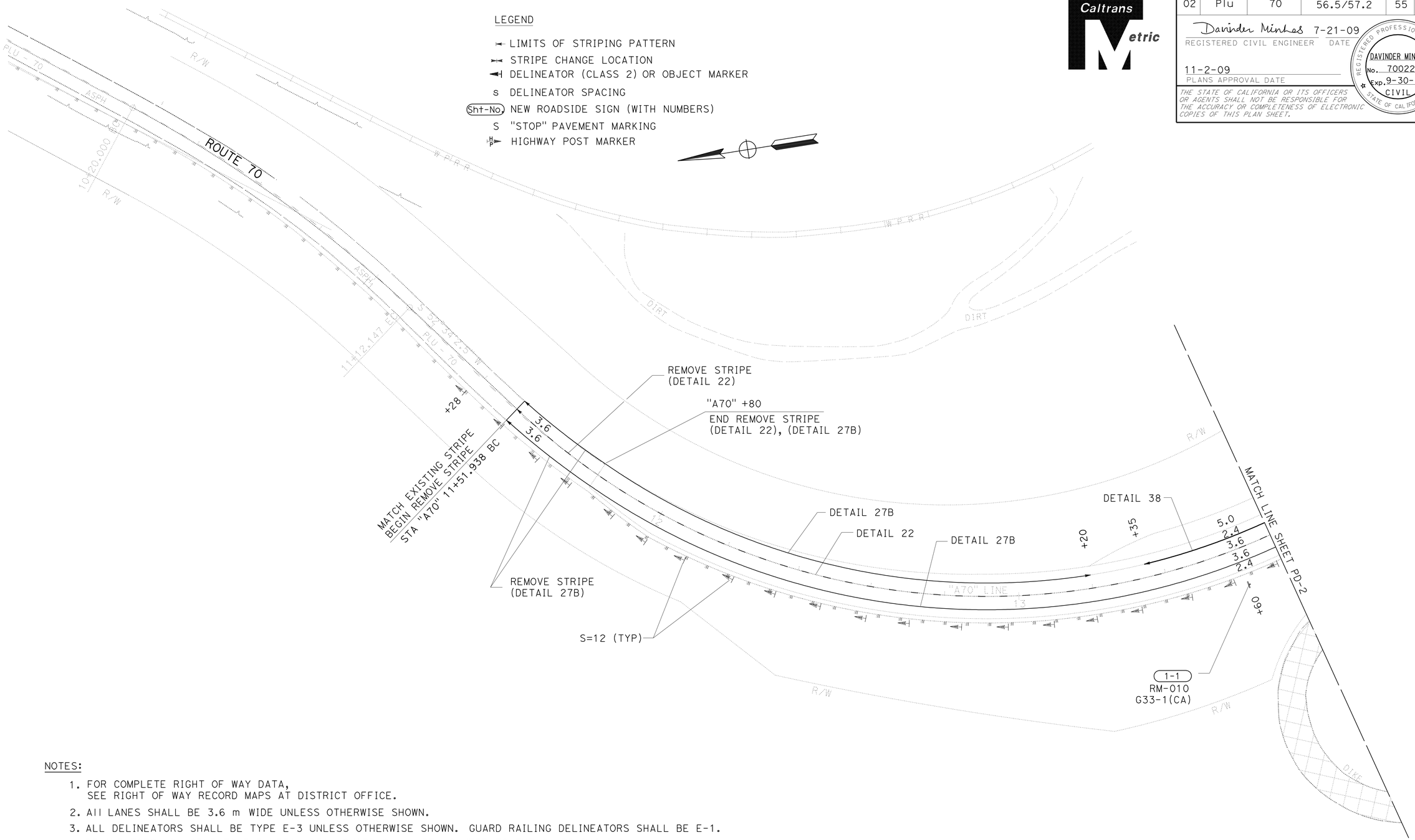

NOTES:

1. FOR COMPLETE RIGHT OF WAY DATA, SEE RIGHT OF WAY RECORD MAPS AT DISTRICT OFFICE.
2. All LANES SHALL BE 3.6 m WIDE UNLESS OTHERWISE SHOWN.
3. ALL DELINEATORS SHALL BE TYPE E-3 UNLESS OTHERWISE SHOWN. GUARD RAILING DELINEATORS SHALL BE E-1.
4. DELINEATORS ADJACENT TO THE METAL BEAM GUARD SHALL BE MOUNTED TO THE GUARD RAILING.
5. ALL SIGN CODES SHOWN ARE FEDERAL UNLESS OTHERWISE DESIGNATED AS CALIFORNIA SIGN CODES.

ALL DIMENSIONS ARE IN METERS
UNLESS OTHERWISE SHOWN

PAVEMENT DELINEATION AND SIGN PLAN

SCALE 1:500

NOTE: THIS PLAN ACCURATE FOR PAVEMENT DELINEATION AND SIGNING ONLY.

PD-1

STATE OF CALIFORNIA - DEPARTMENT OF TRANSPORTATION
NORTH REGION
OFFICE OF DESIGN, WEST
DESIGN BRANCH S7
Caltrans

FUNCTIONAL SUPERVISOR: CYRUS HUI
CALCULATED-DESIGNED BY: DAVINDER MINHAS
CHECKED BY: FRANK RIVAS
REVISED BY
DATE REVISED

LAST REVISION 00-00-00
DATE PLOTTED => 10-NOV-2009
TIME PLOTTED => 07:13

Dist	COUNTY	ROUTE	KILOMETER POST TOTAL PROJECT	SHEET No.	TOTAL SHEETS
02	Plu	70	56.5/57.2	56	149

Davinder Minhas 7-21-09
REGISTERED CIVIL ENGINEER DATE

11-2-09
PLANS APPROVAL DATE

REGISTERED PROFESSIONAL ENGINEER
DAVINDER MINHAS
No. 70022
Exp. 9-30-10
CIVIL
STATE OF CALIFORNIA

THE STATE OF CALIFORNIA OR ITS OFFICERS OR AGENTS SHALL NOT BE RESPONSIBLE FOR THE ACCURACY OR COMPLETENESS OF ELECTRONIC COPIES OF THIS PLAN SHEET.

Caltrans Metric

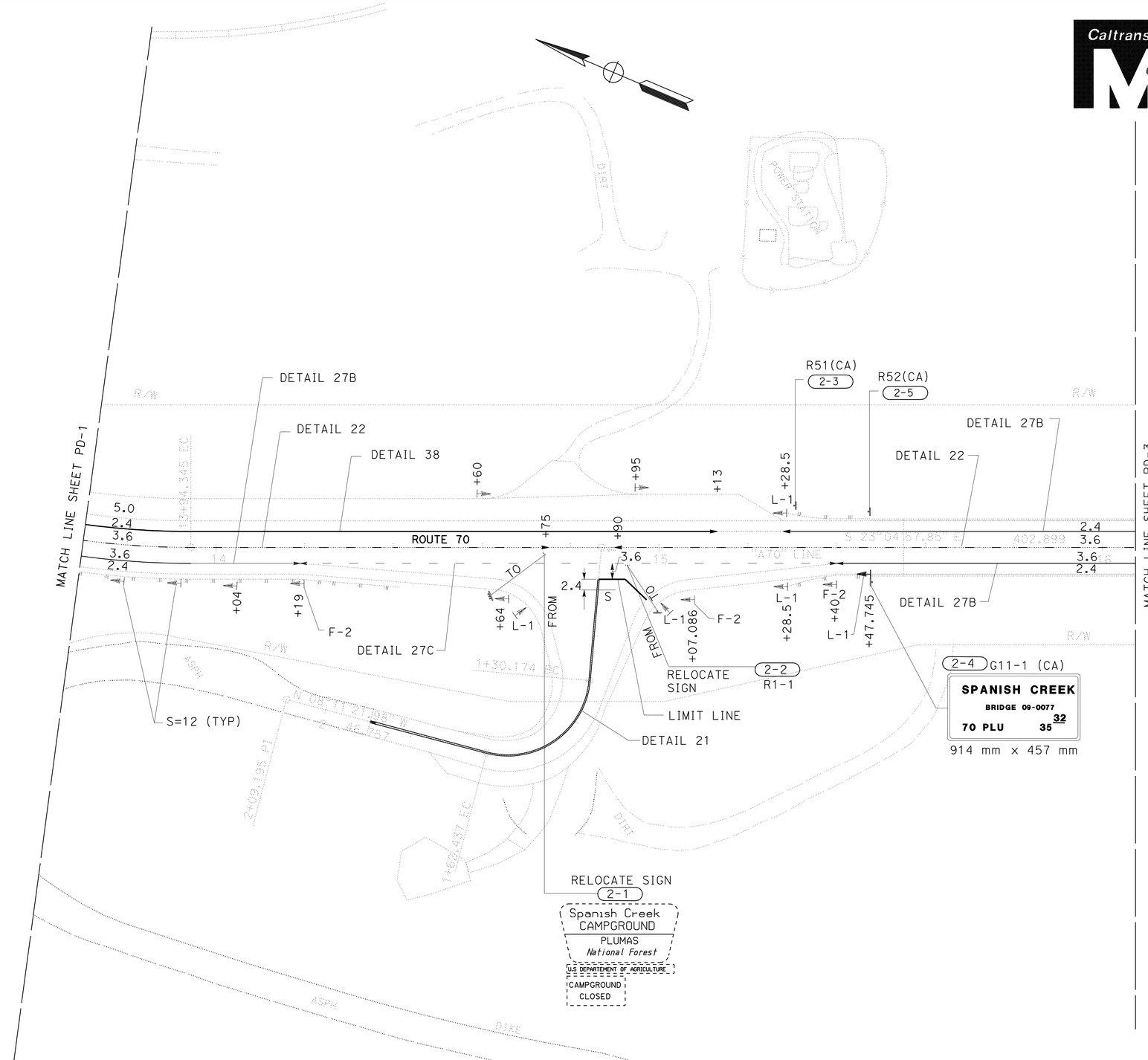

ALL DIMENSIONS ARE IN METERS
UNLESS OTHERWISE SHOWN

PAVEMENT DELINEATION AND SIGN PLAN

SCALE 1:500

PD-2

NOTE: THIS PLAN ACCURATE FOR PAVEMENT DELINEATION AND SIGNING ONLY.

STATE OF CALIFORNIA - DEPARTMENT OF TRANSPORTATION
NORTH REGION
OFFICE OF DESIGN, WEST
DESIGN BRANCH S7

FUNCTIONAL SUPERVISOR: CYRUS HUI
CALCULATED-DESIGNED BY: DAVINDER MINHAS
CHECKED BY: FRANK RIVAS
REVISED BY
DATE REVISED

LAST REVISION 00-00-00
DATE PLOTTED => 10-NOV-2009
TIME PLOTTED => 07:13

NOTE: FOR COMPLETE RIGHT OF WAY AND ACCURATE ACCESS DATA, SEE RIGHT OF WAY RECORD MAPS AT DISTRICT OFFICE.

Dist	COUNTY	ROUTE	KILOMETER POST TOTAL PROJECT	SHEET No.	TOTAL SHEETS
02	Plu	70	56.5/57.2	57	149

Davinder Minhas 7-21-09
REGISTERED CIVIL ENGINEER DATE

11-2-09
PLANS APPROVAL DATE

REGISTERED PROFESSIONAL ENGINEER
DAVINDER MINHAS
No. 70022
Exp. 9-30-10
CIVIL
STATE OF CALIFORNIA

THE STATE OF CALIFORNIA OR ITS OFFICERS OR AGENTS SHALL NOT BE RESPONSIBLE FOR THE ACCURACY OR COMPLETENESS OF ELECTRONIC COPIES OF THIS PLAN SHEET.

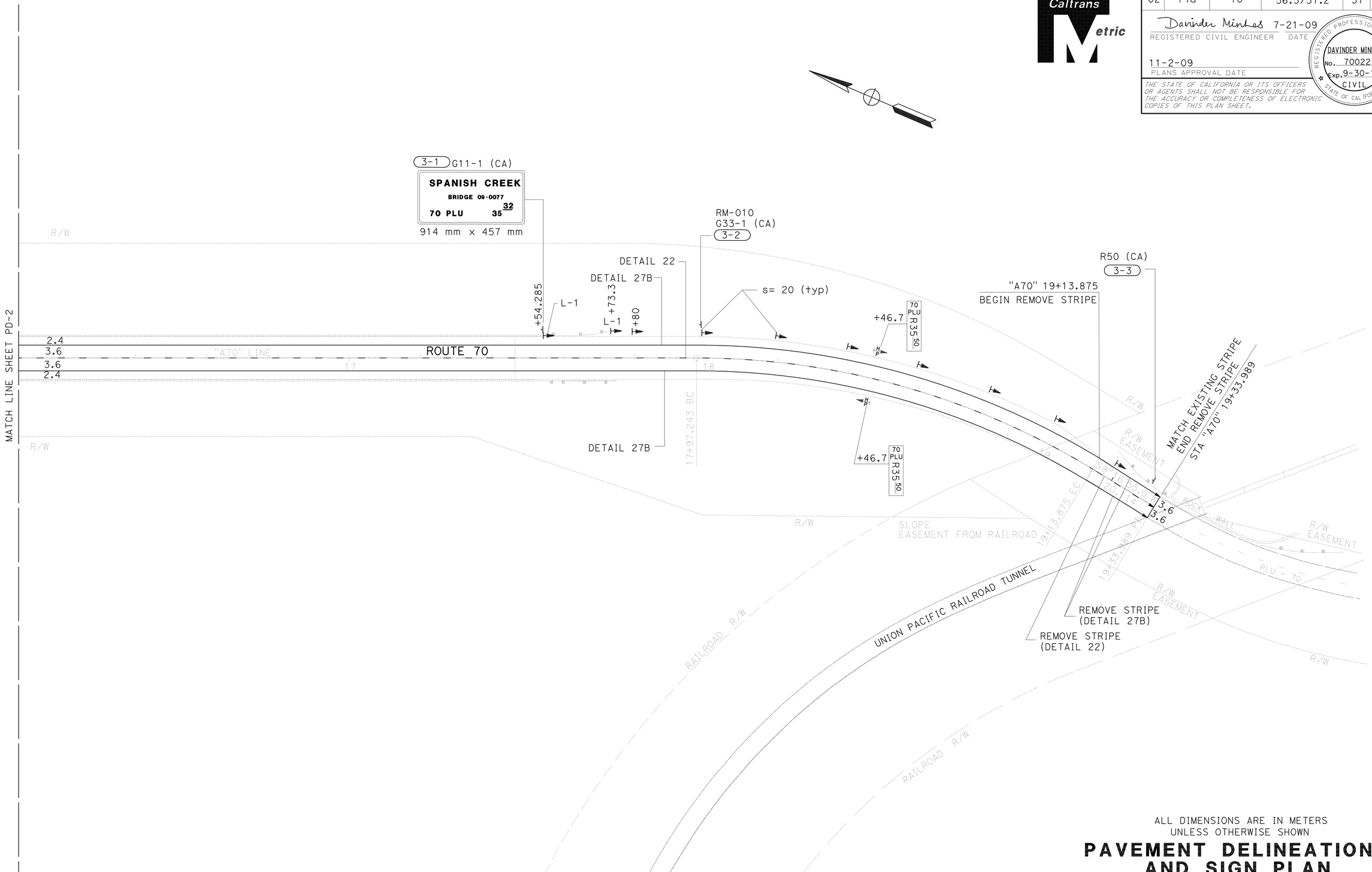

ALL DIMENSIONS ARE IN METERS
UNLESS OTHERWISE SHOWN

PAVEMENT DELINEATION AND SIGN PLAN

SCALE 1:500

NOTE: THIS PLAN ACCURATE FOR PAVEMENT DELINEATION AND SIGNING ONLY.

PD-3

REVISED BY	DATE REVISED

CALCULATED-DESIGNED BY: DAVINDER MINHAS
CHECKED BY: FRANK RIVAS
FUNCTIONAL SUPERVISOR: CYRUS HUI

STATE OF CALIFORNIA - DEPARTMENT OF TRANSPORTATION
Caltrans
NORTH REGION
OFFICE OF DESIGN, WEST
DESIGN BRANCH S7

LAST REVISION 00-00-00 | DATE PLOTTED => 10-NOV-2009 | TIME PLOTTED => 07:14

Dist	COUNTY	ROUTE	KILOMETER POST TOTAL PROJECT	SHEET No.	TOTAL SHEETS
02	Plu	70	56.5/57.2	58	149

Davinder Minhas 7-21-09
REGISTERED CIVIL ENGINEER DATE

11-2-09
PLANS APPROVAL DATE

REGISTERED PROFESSIONAL ENGINEER DAVINDER MINHAS No. 70022 Exp. 9-30-10 CIVIL STATE OF CALIFORNIA

THE STATE OF CALIFORNIA OR ITS OFFICERS OR AGENTS SHALL NOT BE RESPONSIBLE FOR THE ACCURACY OR COMPLETENESS OF ELECTRONIC COPIES OF THIS PLAN SHEET.

NOTES:

1. CALIFORNIA SIGN CODES ARE DESIGNATED BY (CA), OTHERWISE FEDERAL SIGN CODES ARE SHOWN.
2. EXACT LOCATION AND POSITION OF ROADSIDE SIGNS TO BE DETERMINED BY THE ENGINEER.
3. POST LENGTHS GIVEN ARE APPROXIMATE, POST LENGTH AND SIZE TO BE DETERMINED BY ENGINEER.
4. "C" Dim = VERTICAL DIMENSION FROM EP TO BOTTOM OF PANEL.
5. (NP) - NOT A SEPARATE PAY ITEM, FOR INFORMATION ONLY.

200 mm THERMOPLASTIC TRAFFIC STRIPE

DETAIL NUMBER	METER
38	178
Total	178

PAVEMENT MARKER (RETROREFLECTIVE)

DETAIL NUMBER	TYPE D (EACH)
22	230
TOTAL	230

Caltrans Metric

CONTRACTOR FURNISHED SIGNS

SIGN NUMBER (Sht-No.)	SIGN CODE	DESCRIPTION	PANEL SIZE (L x D) (mm x mm)	SINGLE FACED	BACKGROUND SHEETING COLOR	BACKGROUND RETROREFLECTIVE ASTM TYPE	LEGEND SHEETING COLOR	LEGEND RETROREFLECTIVE ASTM TYPE	FURNISH SINGLE SHEET ALUMINUM SIGN (1.6 mm UNFRAMED) m^2
1-1	RM-010	CAMPING (TENT)	610 x 610	X	BROWN	III	WHITE	III	0.37
1-1	G33-1(CA)	DIRECTIONAL ARROW AUXILLIARY	610 x 152	X	BROWN	III	WHITE	III	0.09
2-3	R51 (CA)	TURNOUT	762 x 305	X	WHITE	III	BLACK	III	0.23
2-4	G11-1 (CA)	SPANISH CREEK BRIDGE 32 BRIDGE 09-0077 70 PLU 35	914 x 457	X	WHITE	II	BLACK	II	0.42
2-5	R52 (CA)	SLOWER TRAFFIC USE TURNOUTS	914 x 762	X	WHITE	III	BLACK	III	0.70
3-1	G11-1 (CA)	SPANISH CREEK BRIDGE 45 BRIDGE 09-0077 70 PLU 35	914 x 457	X	WHITE	II	BLACK	II	0.42
3-2	RM-010	CAMPING (TENT)	610 x 610	X	BROWN	III	WHITE	III	0.37
3-2	G33-1(CA)	DIRECTIONAL ARROW AUXILLIARY	610 x 152	X	BROWN	III	WHITE	III	0.09
3-3	R50 (CA)	TURNOUT 1/4MILE	762 x 508	X	WHITE	III	BLACK	III	0.39
								TOTAL	3.08

100 mm THERMOPLASTIC TRAFFIC STRIPE (BROKEN 3.66 m-0.92 m)

DETAIL NUMBER	METER
27C	121
TOTAL	121

100 mm THERMOPLASTIC TRAFFIC STRIPE

DETAIL NUMBER	METER
21	166
22	1534
** 22	120
27B	1 234
TOTAL	3 054

**QUANTITY FROM SHEET SC-10

THERMOPLASTIC PAVEMENT MARKING

DESCRIPTION	NUMBER	m^2
"STOP"	1 @ 2.04 m^2	2.04
LIMIT LINE	1 @ 3.90 m^2	3.90
TOTAL		5.94

REMOVE TRAFFIC STRIPE

LOCATION	REMOVE YELLOW THERMOPLASTIC TRAFFIC STRIPE (HAZARDOUS WASTE)	REMOVE THERMOPLASTIC TRAFFIC STRIPE
	DETAIL 22	DETAIL 27B
	YELLOW	WHITE
	m	m
"A70" 11+51.938 TO 11+80	56	56
"A70" 19+13.875 TO 19+33.989	40	40
TOTAL	*96	*96

* SEE STAGE CONSTRUCTION QUANTITY SHEET FOR TOTAL QUANTITY

ROADSIDE SIGN QUANTITIES

SIGN NUMBER (Sht-No.)	CODE	DESCRIPTION	PANEL SIZE (L x D) mm x mm	"C" Dim (NP) m	POST SIZE AND LENGTH (M) (NP) METAL POST 64 mm x 64 mm	POST SIZE AND LENGTH (M) (NP) WOOD POST 89 mm x 140 mm	ROADSIDE SIGN-ONE POST EA	RELOCATE ROADSIDE SIGN (ONE POST) EA	RELOCATE ROADSIDE SIGN (THREE POST) EA
1-1	RM-010	CAMPING (TENT)	610 x 610	1.5	2.5		1		
	G33-1(CA)	DIRECTIONAL ARROW AUXILLIARY	610 x 152	1.2					
2-1		USFS CAMPGROUND SIGN				4.5			1
2-2	R1-1	STOP		1.5	2.5			1	
2-3	R51 (CA)	TURNOUT	762 x 305	1.5	2.2		1		
2-4	G11-1 (CA)	SPANISH CREEK BRIDGE 32 BRIDGE 09-0077 70 PLU 35	914 x 457	1.2	2.0		1		
2-5	R52 (CA)	SLOWER TRAFFIC USE TURNOUTS	914 x 762	1.5	2.5		1		
3-1	G11-1 (CA)	SPANISH CREEK BRIDGE 45 BRIDGE 09-0077 70 PLU 35	914 x 457	1.2	2.0		1		
3-2	RM-010	CAMPING (TENT)	610 x 610	1.5	2.5		1		
	G33-1 (CA)	DIRECTIONAL ARROW AUXILLIARY	610 x 152	1.2					
3-3	R50 (CA)	TURNOUT 1/4MILE	762 x 508	1.5	2.4		1		
					TOTAL		7	1	1

DELINEATOR - OBJECT MARKER - HIGHWAY POST MARKER

SHEET NUMBER	DELINEATOR (CLASS 1) TYPE E-1	DELINEATOR (CLASS 2) TYPE E-2	DELINEATOR (CLASS 2) TYPE F-1	OBJECT MARKER (TYPE L-1)	HIGHWAY POST MARKER
	EA	EA	EA	EA	EA
PD-1	20	0	0	0	0
PD-2	3	3	3	5	0
PD-3	0	8	0	2	2
SUBTOTAL	23	11	3	7	2
TOTAL	23	14		7	2

PAVEMENT DELINEATION AND SIGN QUANTITIES

PDQ-1

REVISED BY | DATE REVISED
DAVINDER MINHAS | CYRUS HUI
CALCULATED-DESIGNED BY | CHECKED BY
FUNCTIONAL SUPERVISOR | CYRUS HUI

STATE OF CALIFORNIA - DEPARTMENT OF TRANSPORTATION
NORTH REGION
OFFICE OF DESIGN, WEST
DESIGN BRANCH S7
Caltrans

LAST REVISION 00-00-00 | DATE PLOTTED => 10-NOV-2009 | TIME PLOTTED => 07:14

Dist	COUNTY	ROUTE	KILOMETER POST TOTAL PROJECT	SHEET No.	TOTAL SHEETS
02	Plu	70	56.5/57.2	59	149

Davinder Minhas 7-21-09
REGISTERED CIVIL ENGINEER DATE

11-2-09
PLANS APPROVAL DATE

REGISTERED PROFESSIONAL ENGINEER
DAVINDER MINHAS
No. 70022
Exp. 9-30-10
CIVIL
STATE OF CALIFORNIA

THE STATE OF CALIFORNIA OR ITS OFFICERS OR AGENTS SHALL NOT BE RESPONSIBLE FOR THE ACCURACY OR COMPLETENESS OF ELECTRONIC COPIES OF THIS PLAN SHEET.

Caltrans Metric

ROADWAY SUMMARY

LOCATION	STATIONS FROM	STATIONS TO	HOT-MIX ASPHALT (TYPE A) TONNE	CLASS 2 AGGREGATE BASE m^3	(IMPORTED MATERIAL) SHOULDER BACKING TONNE	PLACE AC DIKE (TYPE A) m	REMOVE AC DIKE m	TACK COAT TONNE
"A70"	11+80.000	13+20.000	545	307				0.34
	13+20.000	15+55.145	1452	887				0.91
	17+46.385	19+13.875	668	424				0.42
"PK1"	1+00.000	1+90.000	425	231	4			0.25
PG&E DRIVEWAY	"A70" 14+60.000 L+	"A70" 14+95.000 L+	22	18				0.03
"B70" (TEMPORARY SHOULDER WIDENING) (STAGE 1)	108+85.000	110+67.200	63	26				
HMA (TYPE A) 45 mm (USFS CAMPGROUND Rd)			830		76			2.44
AC DIKE (USFS CAMPGROUND Rd)			33			410	410	
		TOTAL	4038	1893	80	410	410	4.39

TEMPORARY FENCE (TYPE ESA)

LOCATION	TEMPORARY FENCE (TYPE ESA) m
L-1	12
L-2	316
L-3	444
L-4	422
TOTAL	1194

EARTHWORK SUMMARY

LOCATION	STATION FROM	STATION TO	ROCK EXCAVATION (CONTROLLED BLASTING) m^3	ROADWAY EXCAVATION m^3	(N) EMBANKMENT m^3
"A70"	11+80.000	13+20.000		995	* 678
	13+20.000	15+55.145		1081	* 7727
	17+46.385	19+13.875	20805		742
"PK1"	1+09.200	1+90.000		90	830
"B70"	108+85.000	110+67.200		42	13
		TOTAL	20805	2208	9990

* QUANTITY IMPORTED TOPSOIL 0.6 m NOT INCLUDED.
(N) NOT A SEPARATE PAY ITEM, FOR INFORMATION ONLY.

SUMMARY OF QUANTITIES

Q-1

DAVINDER MINHAS — REVISED BY
CYRUS HUI — DATE REVISED
CALCULATED-DESIGNED BY
CHECKED BY
FUNCTIONAL SUPERVISOR
CYRUS HUI

STATE OF CALIFORNIA - DEPARTMENT OF TRANSPORTATION
Caltrans
NORTH REGION
OFFICE OF DESIGN, WEST
DESIGN BRANCH S7

LAST REVISION 00-00-00
DATE PLOTTED => 10-NOV-2009
TIME PLOTTED => 07:14

Dist	COUNTY	ROUTE	KILOMETER POST TOTAL PROJECT	SHEET No.	TOTAL SHEETS
02	Plu	70	56.5/57.2	60	149

Davinder Minhas 7-21-09
REGISTERED CIVIL ENGINEER DATE

11-2-09
PLANS APPROVAL DATE

REGISTERED PROFESSIONAL ENGINEER DAVINDER MINHAS No. 70022 Exp. 9-30-10 CIVIL STATE OF CALIFORNIA

THE STATE OF CALIFORNIA OR ITS OFFICERS OR AGENTS SHALL NOT BE RESPONSIBLE FOR THE ACCURACY OR COMPLETENESS OF ELECTRONIC COPIES OF THIS PLAN SHEET.

Caltrans Metric

METAL BEAM GUARD RAILING

STATION FROM	STATION TO	SIDE	METAL BEAM GUARD RAILING	ALTERNATIVE FLARED TERMINAL SYSTEM	ALTERNATIVE IN-LINE TERMINAL SYSTEM	TRANSITION RAILING (TYPE WB)	REMOVE METAL BEAM GUARD RAILING	(N) REMOVE STEEL FOUNDATION TUBES	VEGETATION CONTROL MINOR CONCRETE
			m	EA	EA	EA	m	m	m^2
"A70" 11+80.000	"A70" 14+26.400	R+	254.60		1				390
"A70" 15+40.150	"A70" 15+47.750	R+		1		1			51
"A70" 15+40.150	"A70" 15+47.750	L+		1		1			51
"A70" 17+51.890	"A70" 17+59.590	R+			1	1			51
"A70" 17+54.290	"A70" 17+61.890	LT		1		1			51
"A70" 11+80.000	"A70" 12+13.000	R+					34.30	22.90	
"A70" 15+38.000	"A70" 15+58.760	R+					19.03		
"A70" 15+37.550	"A70" 15+57.050	L+					19.03		
"A70" 17+45.350	"A70" 17+64.420	R+					19.03		
"A70" 17+45.500	"A70" 17+68.430	L+					22.83		
	TOTAL		254.60	3	2	4	114.22	22.90	594

(N) NOT A SEPARATE PAY ITEM, FOR INFORMATION ONLY

DOUBLE TWISTED WIRE MESH (DTWM) DRAPERY SYSTEM

STATION FROM	STATION TO	DIRECTION	AREA
			m^2
"A70" 17+60.000	"A70" 19+10.000	R+	3000
TOTAL			3000

TEMPORARY EROSION CONTROL

MOVE-IN/MOVE-OUT (TEMPORARY EROSION CONTROL)	TEMPORARY FIBER ROLL	TEMPORARY SILT FENCE	TEMPORARY CHECK DAM	TEMPORARY HYDRAULIC MULCH (STABILIZED FIBER MATRIX)	TEMPORARY GRAVEL BAG BERM	TEMPORARY SOIL BINDER	TEMPORARY COVER	TEMPORARY STRAW BALE BARRIER	TEMPORARY DRAINAGE INLET PROTECTION	TEMPORARY CONSTRUCTION ENTRANCE
EA	m	m	EA	m^2	m	m^2	m^2	m	EA	EA
12	1480	1160	170	15,700	960	33,100	8740	540	11	9

RESET GATE

STATION	RESET GATE
	EA
"PK1" 1+78.50	1
TOTAL	1

SUMMARY OF QUANITITIES

Q-2

STATE OF CALIFORNIA - DEPARTMENT OF TRANSPORTATION
NORTH REGION
OFFICE OF DESIGN, WEST
DESIGN BRANCH S7

Caltrans

FUNCTIONAL SUPERVISOR: CYRUS HUI
CALCULATED-DESIGNED BY: DAVINDER MINHAS
CHECKED BY: CYRUS HUI
REVISED BY
DATE REVISED

LAST REVISION 00-00-00
DATE PLOTTED => 10-NOV-2009
TIME PLOTTED => 07:14

Dist	COUNTY	ROUTE	KILOMETER POST TOTAL PROJECT	SHEET No.	TOTAL SHEETS
02	Plu	70	56.5/57.2	61	149

ART 7-21-09
REGISTERED ELECTRICAL ENGINEER DATE

11-2-09
PLANS APPROVAL DATE

REGISTERED PROFESSIONAL ENGINEER A.P. ROBLES No. E15293 Exp. 3-31-11 ELECTRICAL STATE OF CALIFORNIA

THE STATE OF CALIFORNIA OR ITS OFFICERS OR AGENTS SHALL NOT BE RESPONSIBLE FOR THE ACCURACY OR COMPLETENESS OF ELECTRONIC COPIES OF THIS PLAN SHEET.

Caltrans Metric

NOTE:

FOR COMPLETE RIGHT OF WAY, SEE RIGHT OF WAY RECORD MAPS AT THE DISTRICT OFFICE.

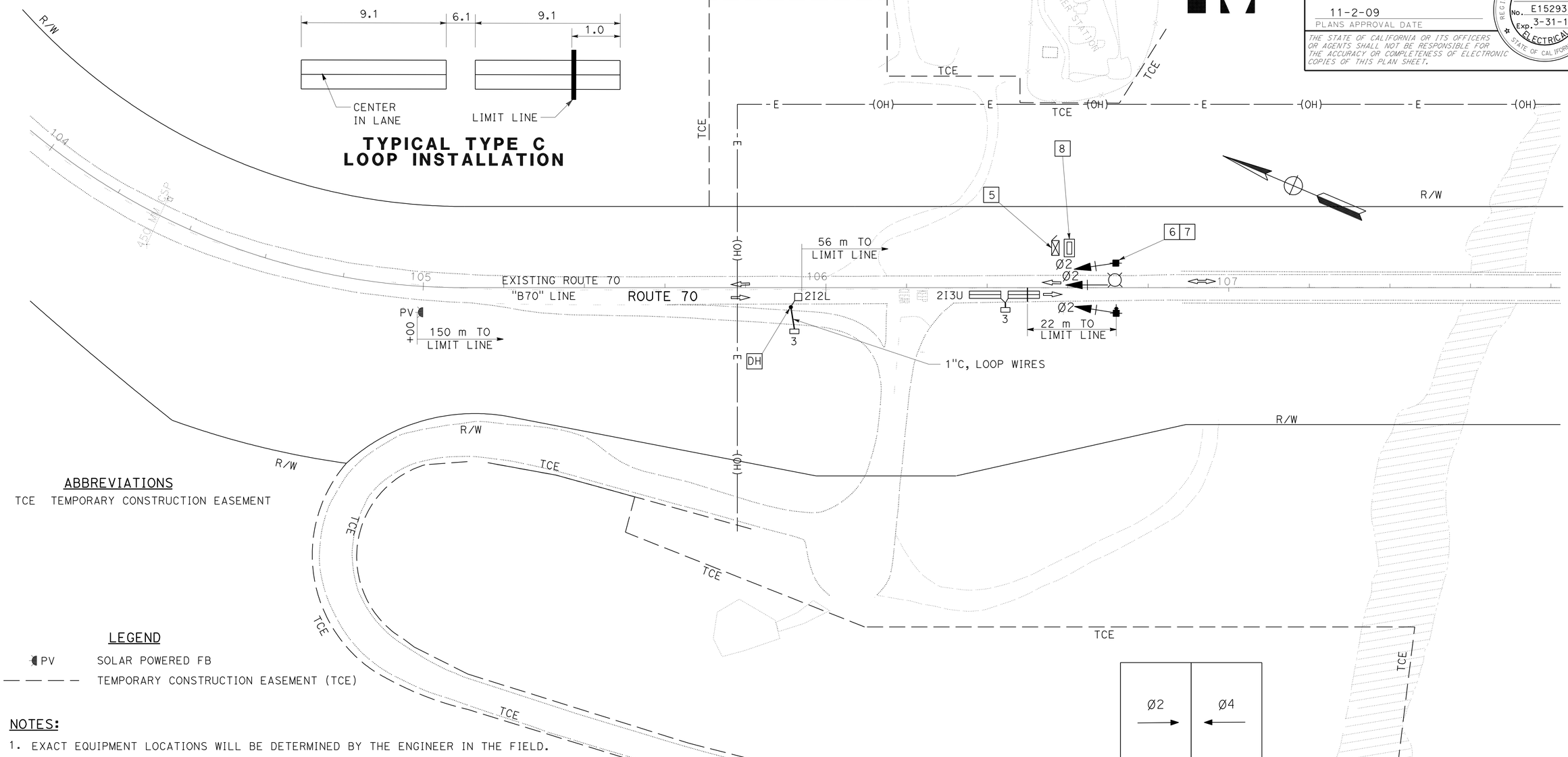

ABBREVIATIONS

TCE TEMPORARY CONSTRUCTION EASEMENT

LEGEND

PV SOLAR POWERED FB

— — — — TEMPORARY CONSTRUCTION EASEMENT (TCE)

NOTES:

1. EXACT EQUIPMENT LOCATIONS WILL BE DETERMINED BY THE ENGINEER IN THE FIELD.
2. MARK WOOD POLES WITH RETROREFLECTIVE SHEETING. SEE DETAIL, SHEET E-2.
3. PROVIDE SIGNAL HEADS WITH 300 mm SECTIONS.
4. SEE STAGE CONSTRUCTION PLANS FOR ADDITIONAL FLASHING BEACON LOCATIONS.

5. INSTALL STATE-FURNISHED CONTROLLER ASSEMBLY (MODEL 332 CABINET).
6. CLASS 2 WOOD POLE.
7. PROVIDE WITH 200 W HPS LUMINAIRE ON 1.8 m LMA.
8. GENERATOR SYSTEM.

PHASE DIAGRAM

ALL DIMENSIONS ARE IN METERS UNLESS OTHERWISE SHOWN

TEMPORARY SIGNAL SYSTEM

SCALE 1:500

E-1

THIS PLAN IS ACCURATE FOR ELECTRICAL WORK ONLY.

REVISED BY	DATE REVISED

CALCULATED-DESIGNED BY: ARTURO ROBLES
CHECKED BY: JIM HANNIGAN
FUNCTIONAL SUPERVISOR: ROB STINGER

STATE OF CALIFORNIA - DEPARTMENT OF TRANSPORTATION
Caltrans ELECTRICAL DESIGN

R:\PSE\02-373101\237310ua001.dgn

LAST REVISION 08-01-08 | DATE PLOTTED => 10-NOV-2009 | TIME PLOTTED => 07:15

BORDER LAST REVISED 3/1/2007 | RELATIVE BORDER SCALE IS IN MILLIMETERS 0 20 40 60 80 | USERNAME => trmikesl | DGN FILE => 237310ua001.dgn | CU 02 365 | EA 373101

Dist	COUNTY	ROUTE	KILOMETER POST TOTAL PROJECT	SHEET No.	TOTAL SHEETS
02	Plu	70	56.5/57.2	62	149

ART 7-21-09
REGISTERED ELECTRICAL ENGINEER DATE

11-2-09
PLANS APPROVAL DATE

REGISTERED PROFESSIONAL ENGINEER A.P. ROBLES No. E15293 Exp. 3-31-11 ELECTRICAL STATE OF CALIFORNIA

THE STATE OF CALIFORNIA OR ITS OFFICERS OR AGENTS SHALL NOT BE RESPONSIBLE FOR THE ACCURACY OR COMPLETENESS OF ELECTRONIC COPIES OF THIS PLAN SHEET.

Caltrans Metric

NOTE:

FOR COMPLETE RIGHT OF WAY, SEE RIGHT OF WAY RECORD MAPS AT THE DISTRICT OFFICE.

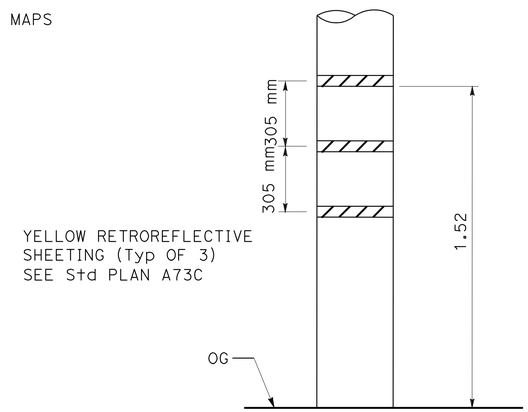

RETROREFELECTIVE SHEETING
NO SCALE

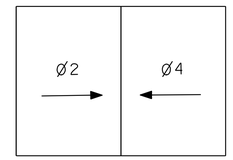

PHASE DIAGRAM

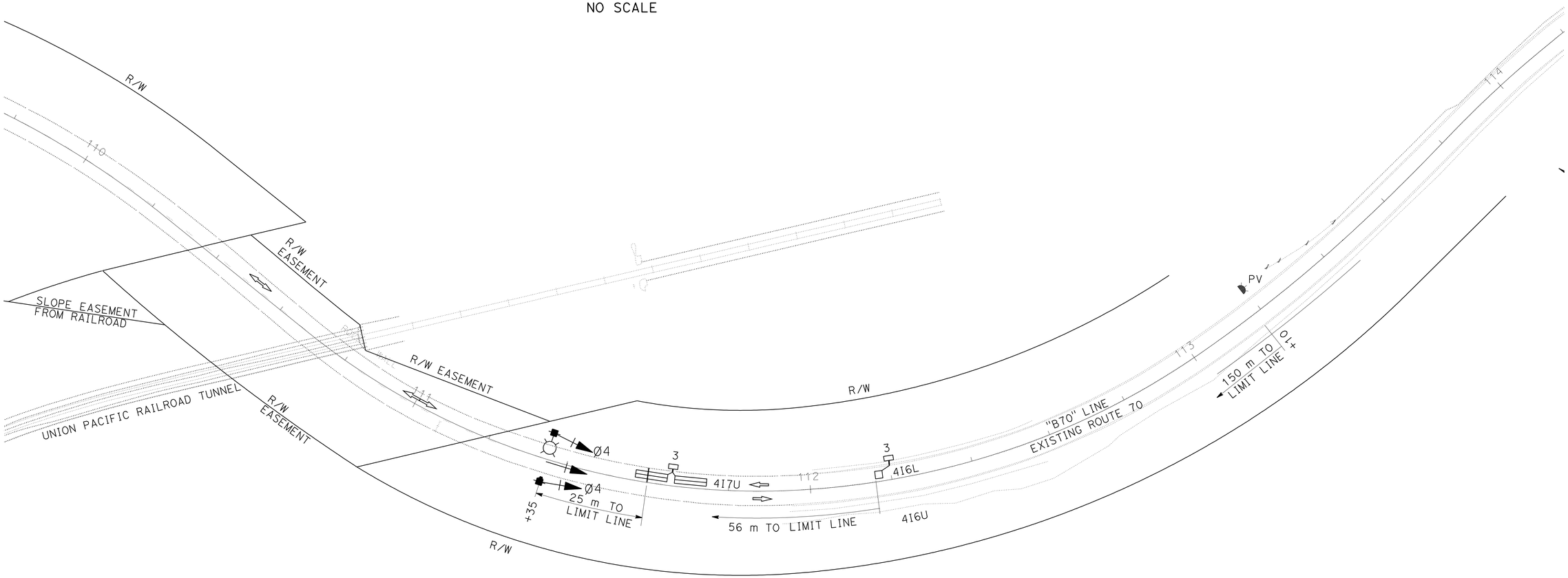

ALL DIMENSIONS ARE IN METERS UNLESS OTHERWISE SHOWN

TEMPORARY SIGNAL SYSTEM
SCALE 1:500

E-2

THIS PLAN IS ACCURATE FOR ELECTRICAL WORK ONLY.

ARTURO ROBLES — REVISED BY — DATE REVISED
JIM HANNIGAN — CALCULATED-DESIGNED BY — CHECKED BY
ROB STINGER — FUNCTIONAL SUPERVISOR

STATE OF CALIFORNIA - DEPARTMENT OF TRANSPORTATION
Caltrans **ELECTRICAL DESIGN**

R:\PSE\02-373101\237310ua002.dgn

LAST REVISION 08-01-08 | DATE PLOTTED => 10-NOV-2009 | TIME PLOTTED => 08:28

DIST	COUNTY	ROUTE	POST MILES TOTAL PROJECT	SHEET NO.	TOTAL SHEETS
02	Plu	70	56.5/57.2	63	149

Caltrans Metric

Randell D. Hiatt
REGISTERED CIVIL ENGINEER

October 20, 2006
PLANS APPROVAL DATE

REGISTERED PROFESSIONAL ENGINEER
Randell D. Hiatt
No. C50200
Exp. 6-30-07
CIVIL
STATE OF CALIFORNIA

The State of California or its officers or agents shall not be responsible for the accuracy or completeness of electronic copies of this plan sheet.

To get to the Caltrans web site, go to: http://www.dot.ca.gov

To accompany plans dated 11-2-09

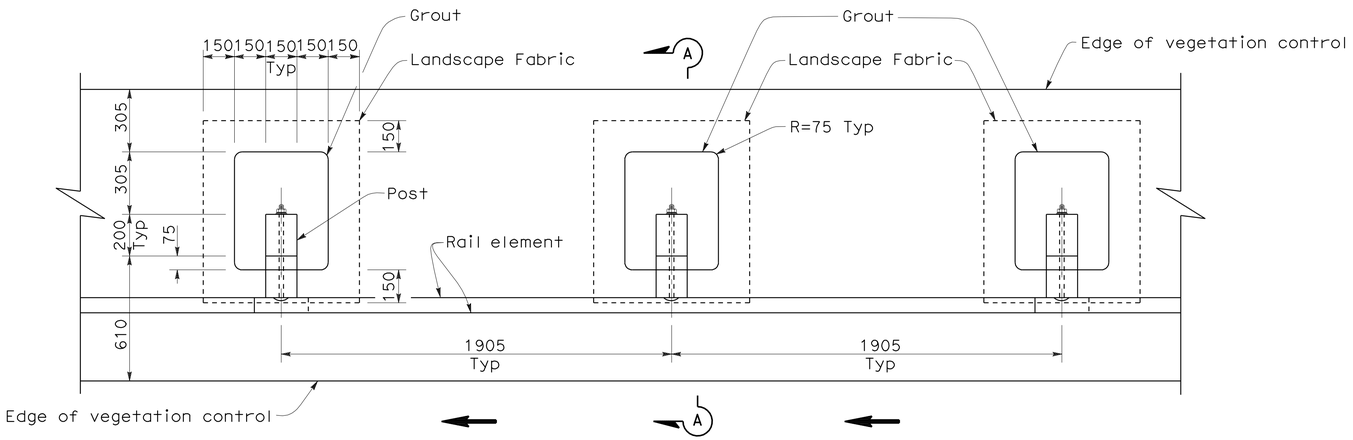

PLAN

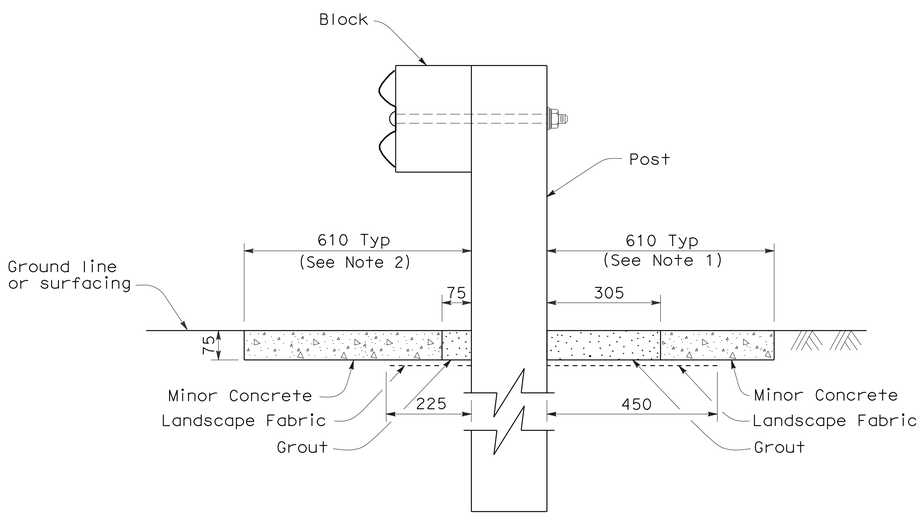

SECTION A-A

NOTES:

1. Where the distance between back of post and hinge point is less than 610 mm, vegetation control to be constructed flush with the back edge of the post.
2. Where dike is constructed under railing, construct vegetation control to back edge of dike. Where paved shoulder is constructed within 610 mm in front of the post, construct vegetation control to the edge of paved shoulder.
3. Direction of adjacent traffic indicated by ← .

STATE OF CALIFORNIA
DEPARTMENT OF TRANSPORTATION

METAL BEAM GUARD RAILING TYPICAL VEGETATION CONTROL STANDARD RAILING SECTION

NO SCALE

ALL DIMENSIONS ARE IN MILLIMETERS UNLESS OTHERWISE SHOWN

NSP A77C5 DATED OCTOBER 20, 2006 SUPPLEMENTS THE STANDARD PLANS BOOK DATED JULY 2004.

NEW STANDARD PLAN NSP A77C5

2004 NEW STANDARD PLAN NSP A77C5

7-24-06

DIST	COUNTY	ROUTE	POST MILES TOTAL PROJECT	SHEET NO.	TOTAL SHEETS
02	Plu	70	56.5/57.2	64	149

Caltrans Metric

Randell D. Hiatt
REGISTERED CIVIL ENGINEER

October 20, 2006
PLANS APPROVAL DATE

REGISTERED PROFESSIONAL ENGINEER Randell D. Hiatt No. C50200 Exp. 6-30-07 CIVIL STATE OF CALIFORNIA

The State of California or its officers or agents shall not be responsible for the accuracy or completeness of electronic copies of this plan sheet.

To get to the Caltrans web site, go to: http://www.dot.ca.gov

To accompany plans dated 11-2-09

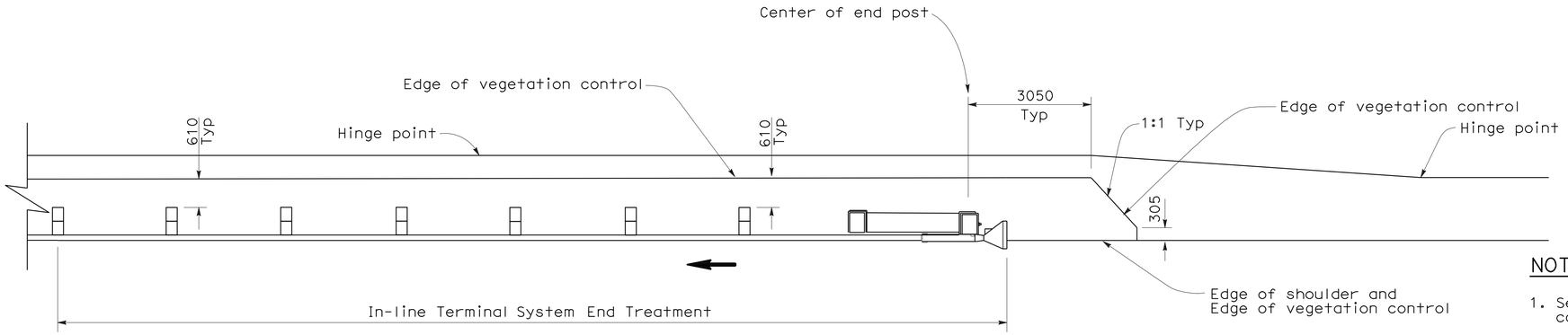

PLAN

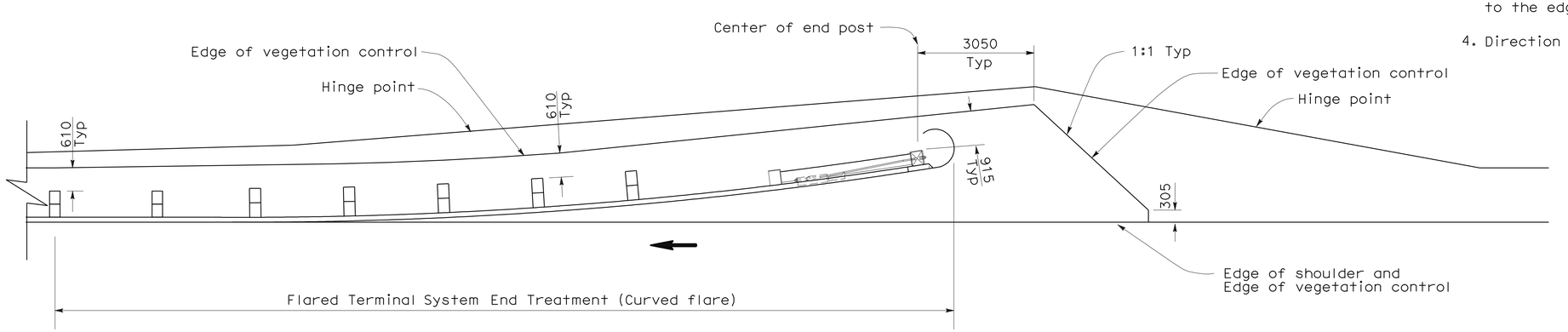

PLAN

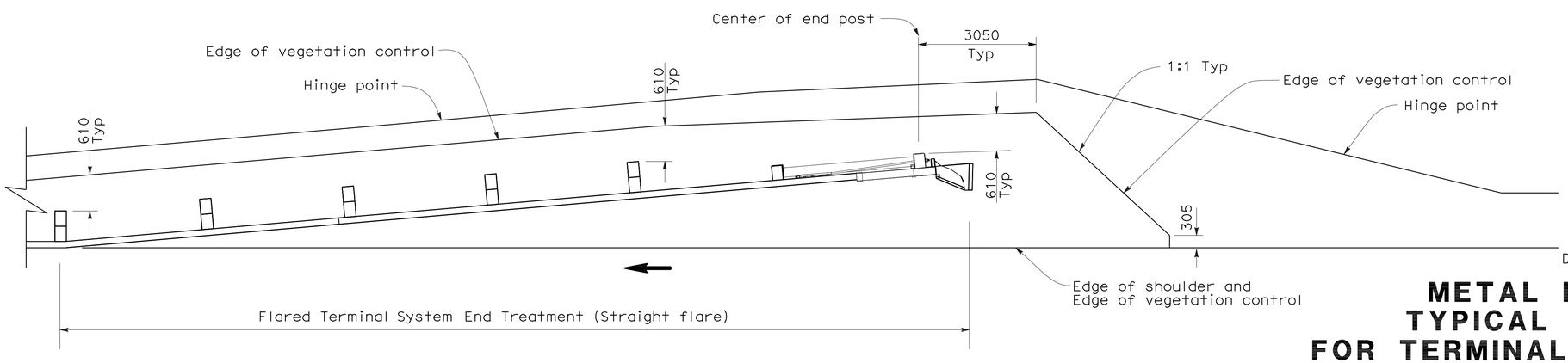

PLAN

NOTES:

1. See New Standard Plan NSP A77C5 for additional vegetation control details.
2. Where the distance between back of post and hinge point is less than 610 mm, vegetation control to be constructed flush with the back edge of the post.
3. Where dike is constructed under railing, construct vegetation control to back edge of dike. Where paved shoulder is constructed within 610 mm in front of the post, construct vegetation control to the edge of paved shoulder.
4. Direction of adjacent traffic indicated by ←.

STATE OF CALIFORNIA
DEPARTMENT OF TRANSPORTATION

METAL BEAM GUARD RAILING TYPICAL VEGETATION CONTROL FOR TERMINAL SYSTEM END TREATMENTS

NO SCALE

ALL DIMENSIONS ARE IN MILLIMETERS UNLESS OTHERWISE SHOWN

NSP A77C6 DATED OCTOBER 20, 2006 SUPPLEMENTS THE STANDARD PLANS BOOK DATED JULY 2004.

NEW STANDARD PLAN NSP A77C6

2004 NEW STANDARD PLAN NSP A77C6

7-24-06

DIST	COUNTY	ROUTE	POST MILES TOTAL PROJECT	SHEET NO.	TOTAL SHEETS
02	Plu	70	56.5/57.2	65	149

Randell D. Hiatt
REGISTERED CIVIL ENGINEER

October 20, 2006
PLANS APPROVAL DATE

REGISTERED PROFESSIONAL ENGINEER
Randell D. Hiatt
No. C50200
Exp. 6-30-07
CIVIL
STATE OF CALIFORNIA

The State of California or its officers or agents shall not be responsible for the accuracy or completeness of electronic copies of this plan sheet.

To get to the Caltrans web site, go to: http://www.dot.ca.gov

To accompany plans dated 11-2-09

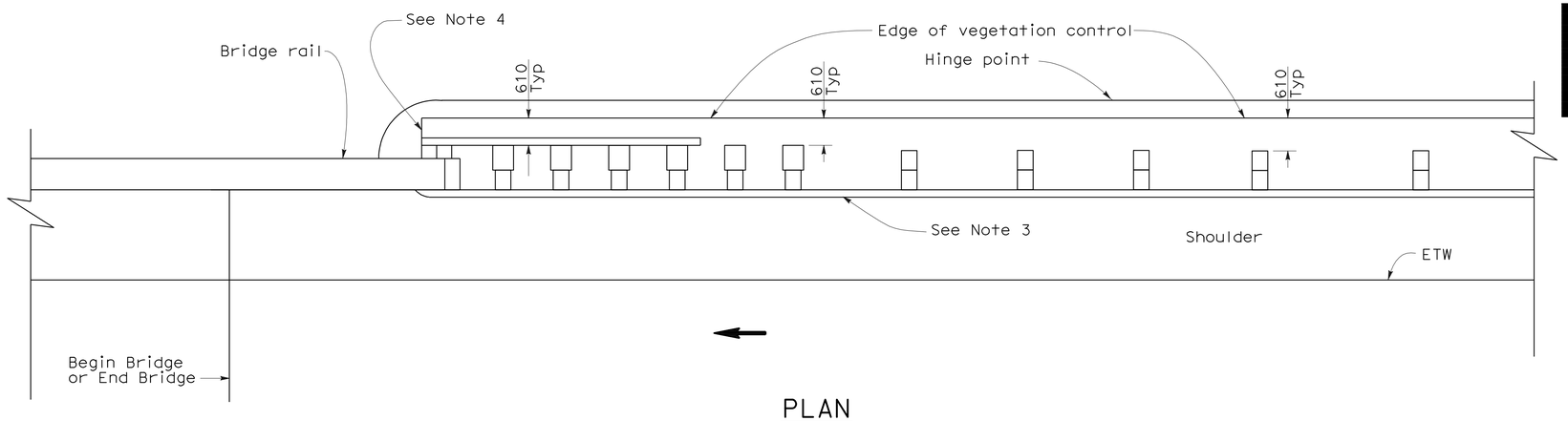

PLAN

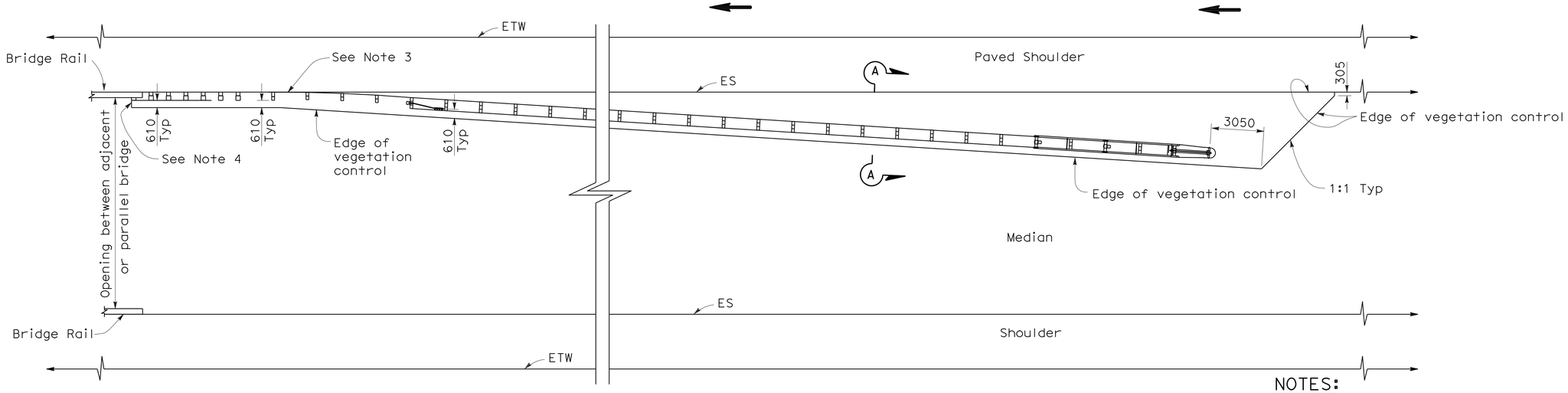

PLAN

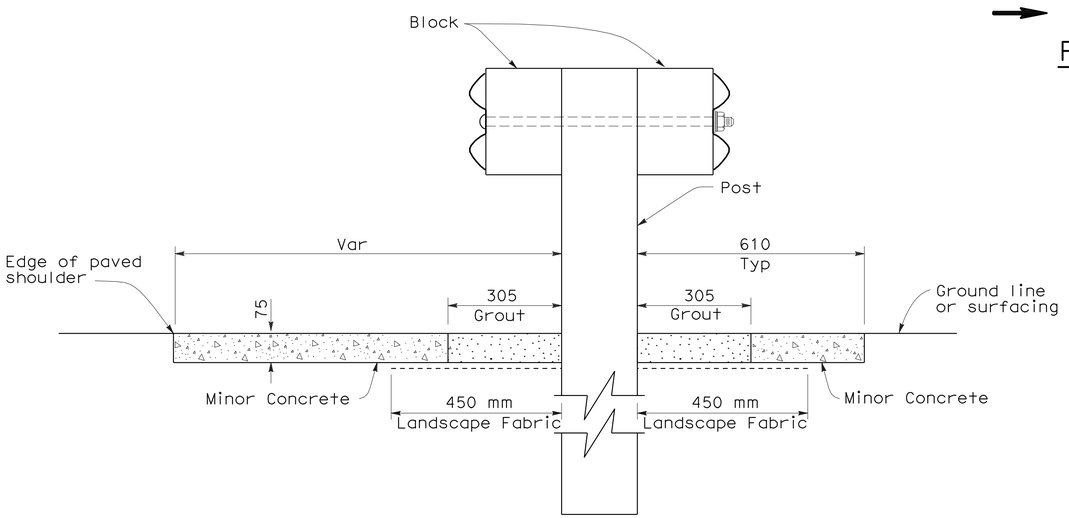

SECTION A-A

NOTES:

1. See New Standard Plan NSP A77C5 for additional vegetation control details.
2. Where the distance between back of post and hinge point is less than 610 mm, vegetation control to be constructed flush with the back edge of the post.
3. Where dike is constructed under railing, construct vegetation control to back edge of dike. Where paved shoulder is constructed within 610 mm in front of the post, construct vegetation control to the edge of paved shoulder.
4. End vegetation control at end of backside rail element.
5. Direction of adjacent traffic indicated by ←.

STATE OF CALIFORNIA
DEPARTMENT OF TRANSPORTATION

METAL BEAM GUARD RAILING TYPICAL VEGETATION CONTROL AT STRUCTURE APPROACH AND DEPARTURE

NO SCALE

ALL DIMENSIONS ARE IN MILLIMETERS UNLESS OTHERWISE SHOWN

NSP A77C7 DATED OCTOBER 20, 2006 SUPPLEMENTS THE STANDARD PLANS BOOK DATED JULY 2006.

NEW STANDARD PLAN NSP A77C7

2004 NEW STANDARD PLAN NSP A77C7

7-24-06

DIST	COUNTY	ROUTE	POST MILES TOTAL PROJECT	SHEET NO.	TOTAL SHEETS
02	Plu	70	56.5/57.2	66	149

Caltrans Metric

Randell D. Hiatt
REGISTERED CIVIL ENGINEER

October 20, 2006
PLANS APPROVAL DATE

REGISTERED PROFESSIONAL ENGINEER
Randell D. Hiatt
No. C50200
Exp. 6-30-07
CIVIL
STATE OF CALIFORNIA

The State of California or its officers or agents shall not be responsible for the accuracy or completeness of electronic copies of this plan sheet.

To get to the Caltrans web site, go to: http://www.dot.ca.gov

To accompany plans dated 11-2-09

NOTES:

1. See New Standard Plan NSP A77C5 for additional vegetation control details.
2. Where the distance between back of post and hinge point is less than 610 mm, vegetation control to be constructed flush with the back edge of the post.
3. Where dike is constructed under railing, construct vegetation control to back edge of dike. Where paved shoulder is constructed within 610 mm in front of the post, construct vegetation control to the edge of paved shoulder.
4. Direction of adjacent traffic indicated by ←.

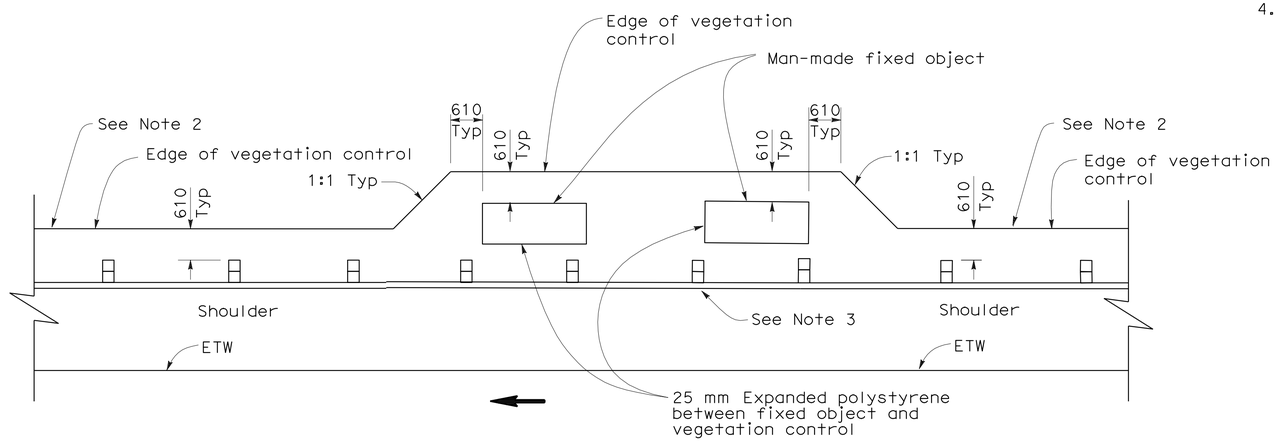

PLAN

FIXED OBJECT(S) ON SHOULDER

STATE OF CALIFORNIA
DEPARTMENT OF TRANSPORTATION

METAL BEAM GUARD RAILING TYPICAL VEGETATION CONTROL AT FIXED OBJECT

NO SCALE

ALL DIMENSIONS ARE IN MILLIMETERS UNLESS OTHERWISE SHOWN

NSP A77C8 DATED OCTOBER 20, 2006 SUPPLEMENTS THE STANDARD PLANS BOOK DATED JULY 2006.

NEW STANDARD PLAN NSP A77C8

2004 NEW STANDARD PLAN NSP A77C8

7-24-06

DIST	COUNTY	ROUTE	POST MILES TOTAL PROJECT	SHEET NO.	TOTAL SHEETS
02	Plu	70	56.5/57.2	67	149

Caltrans Metric

Randell D. Hiatt
REGISTERED CIVIL ENGINEER

October 20, 2006
PLANS APPROVAL DATE

REGISTERED PROFESSIONAL ENGINEER
Randell D. Hiatt
No. C50200
Exp. 6-30-07
CIVIL
STATE OF CALIFORNIA

The State of California or its officers or agents shall not be responsible for the accuracy or completeness of electronic copies of this plan sheet.

To get to the Caltrans web site, go to: http://www.dot.ca.gov

To accompany plans dated 11-2-09

NOTES:

1. See New Standard Plan NSP A77C5 for additional vegetation control details.
2. Where dike is constructed under railing, construct vegetation control to back edge of dike. Where paved shoulder is constructed within 610 mm in front of the post, construct vegetation control to the edge of paved shoulder.
3. Direction of adjacent traffic indicated by ← .

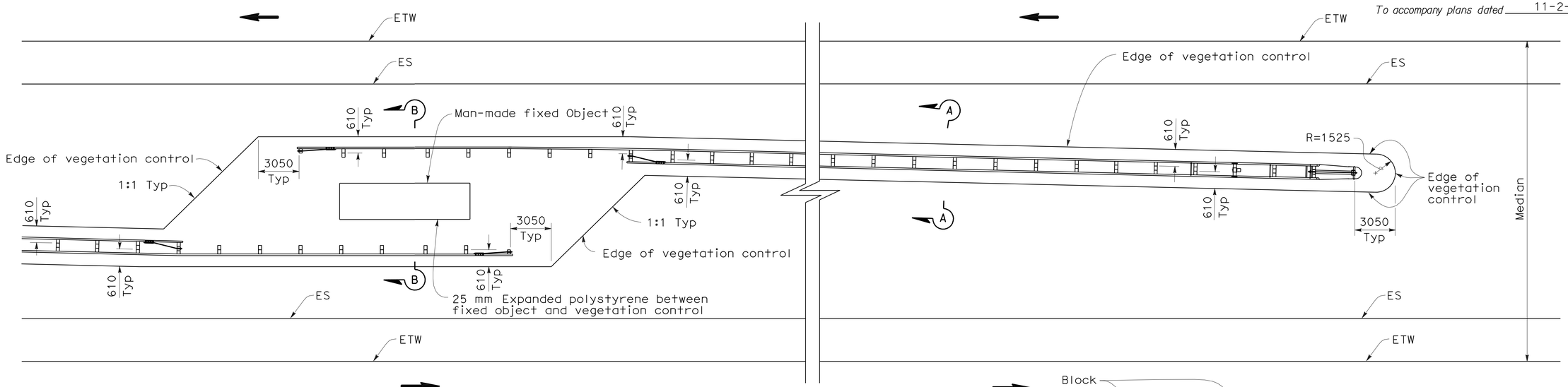

PLAN

FIXED OBJECT(S) IN MEDIAN

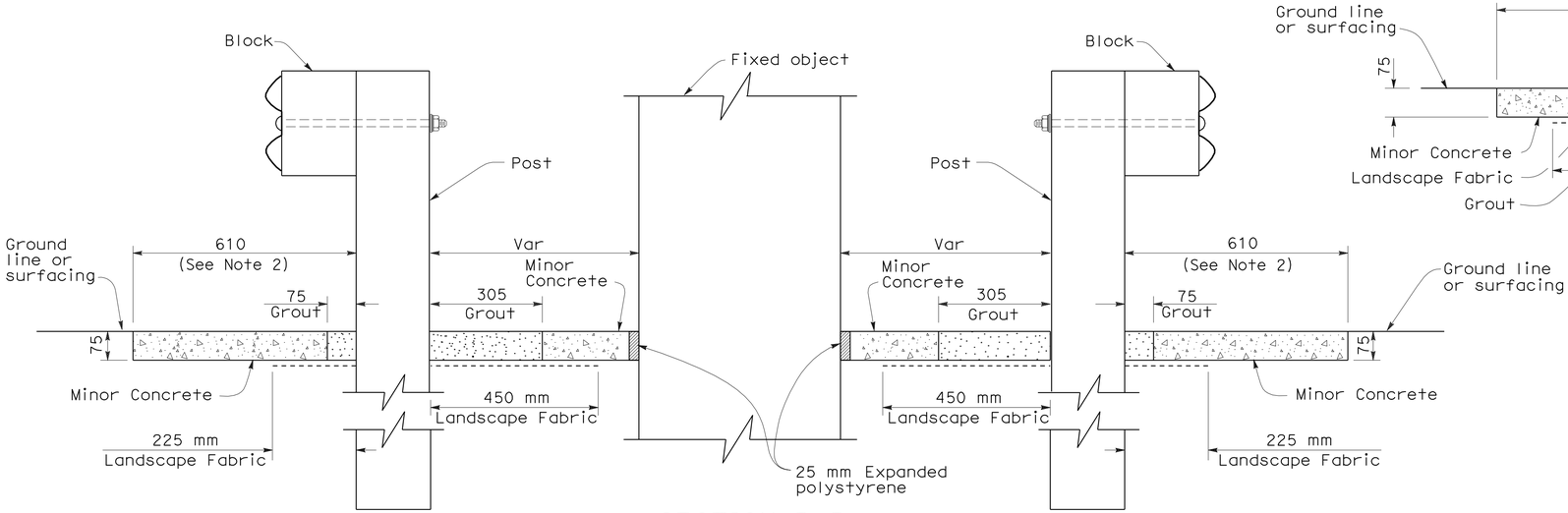

SECTION B-B

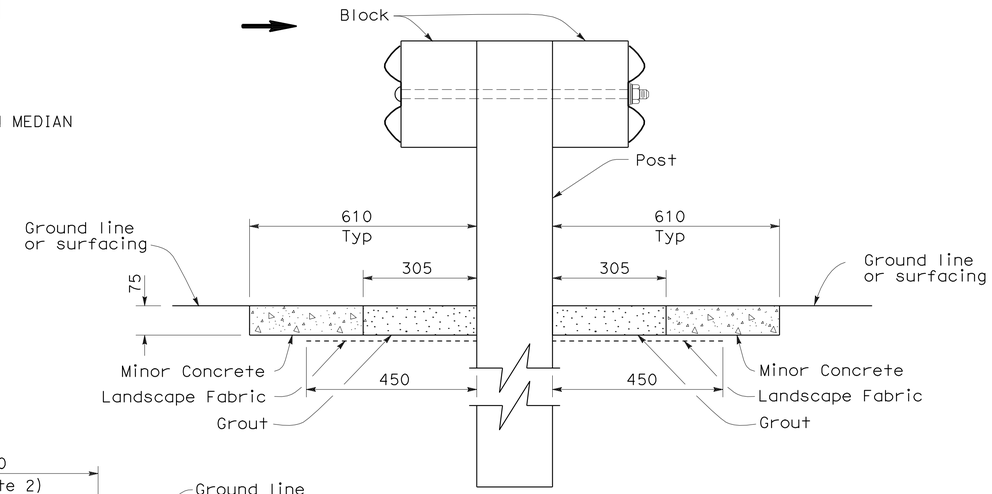

SECTION A-A

STATE OF CALIFORNIA
DEPARTMENT OF TRANSPORTATION

METAL BEAM GUARD RAILING TYPICAL VEGETATION CONTROL AT FIXED OBJECT

NO SCALE

ALL DIMENSIONS ARE IN MILLIMETERS UNLESS OTHERWISE SHOWN

NSP A77C9 DATED OCTOBER 20, 2006 SUPPLEMENTS THE STANDARD PLANS BOOK DATED JULY 2004.

NEW STANDARD PLAN NSP A77C9

2004 NEW STANDARD PLAN NSP A77C9

7-24-06

DIST	COUNTY	ROUTE	POST MILES TOTAL PROJECT	SHEET NO.	TOTAL SHEETS
02	Plu	70	56.5/57.2	68	149

Randell D. Hiatt
REGISTERED CIVIL ENGINEER

October 20, 2006
PLANS APPROVAL DATE

REGISTERED PROFESSIONAL ENGINEER
Randell D. Hiatt
No. C50200
Exp. 6-30-07
CIVIL
STATE OF CALIFORNIA

The State of California or its officers or agents shall not be responsible for the accuracy or completeness of electronic copies of this plan sheet.

To get to the Caltrans web site, go to: http://www.dot.ca.gov

To accompany plans dated 11-2-09

Caltrans Metric

NOTES:

1. See New Standard Plan NSP A77C5 for additional vegetation control details.
2. Where dike is constructed under railing, construct vegetation control to back edge of dike. Where paved shoulder is constructed within 610 mm in front of the post, construct vegetation control to the edge of paved shoulder.
3. Direction of adjacent traffic indicated by ←.

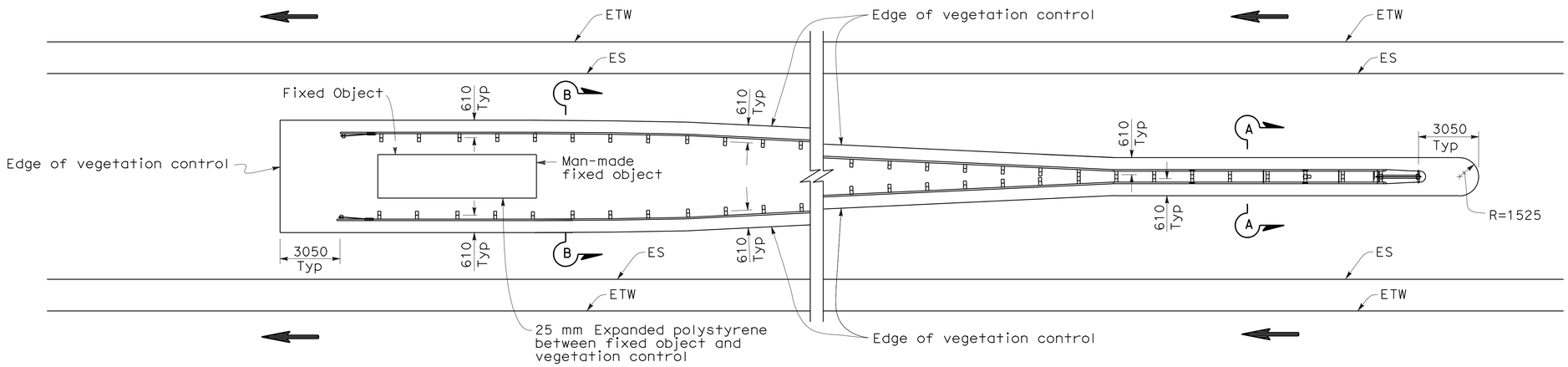

PLAN

FIXED OBJECT(S) BETWEEN SEPARTE ROADBEDS
(ONE-WAY TRAFFIC)

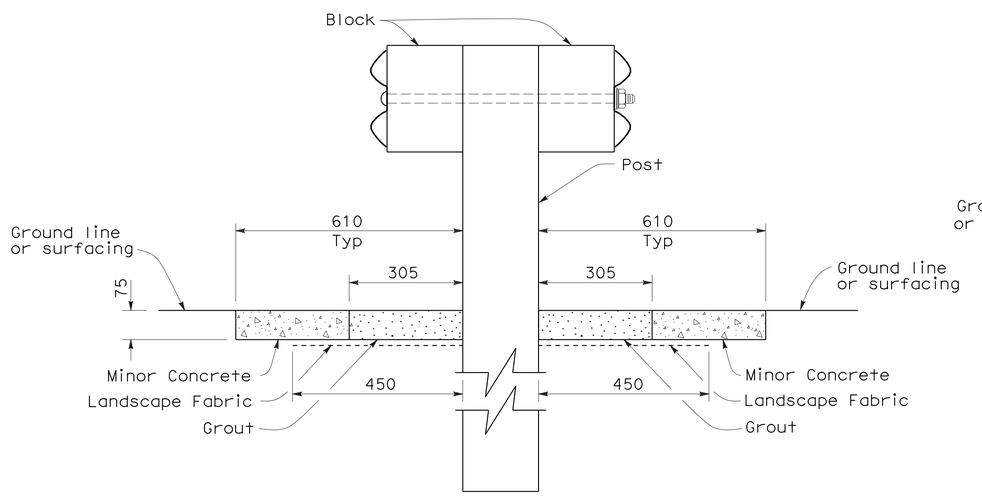

SECTION A-A

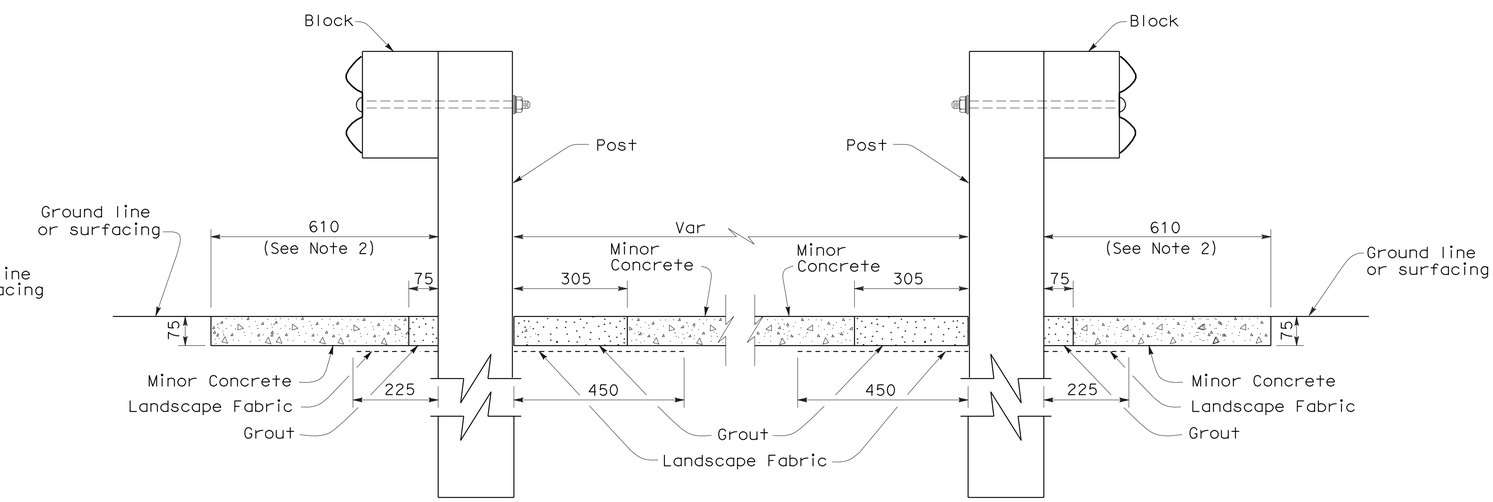

SECTION B-B

STATE OF CALIFORNIA
DEPARTMENT OF TRANSPORTATION

METAL BEAM GUARD RAILING TYPICAL VEGETATION CONTROL AT FIXED OBJECT

NO SCALE

ALL DIMENSIONS ARE IN MILLIMETERS UNLESS OTHERWISE SHOWN

NSP A77C10 DATED OCTOBER 20, 2006 SUPPLEMENTS THE STANDARD PLANS BOOK DATED JULY 2004.

NEW STANDARD PLAN NSP A77C10

2004 NEW STANDARD PLAN NSP A77C10

7-24-06

DIST	COUNTY	ROUTE	KILOMETER POST TOTAL PROJECT	SHEET NO.	TOTAL SHEETS
02	Plu	70	56.5/57.2	69	149

Caltrans Metric

Raymond Don Tsztoo
REGISTERED CIVIL ENGINEER

January 18, 2008
PLANS APPROVAL DATE

REGISTERED PROFESSIONAL ENGINEER Raymond Don Tsztoo No. C37332 Exp. 6-30-08 CIVIL STATE OF CALIFORNIA

The State of California or its officers or agents shall not be responsible for the accuracy or completeness of electronic copies of this plan sheet.

To get to the Caltrans web site, go to: http://www.dot.ca.gov

To accompany plans dated 11-2-09

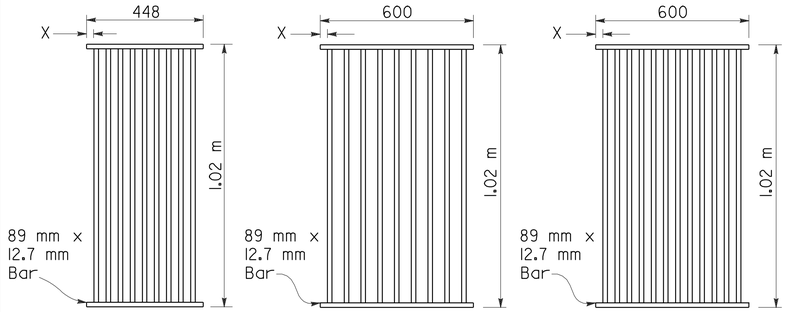

TYPE 450-9

35 mm Clear spacing. Use within the roadbed on highways where bicycles and pedestrians are excluded.

TYPE 600-9

51 mm Clear spacing. Use in locations off the roadbed on all types of highways.

TYPE 600-12

35 mm Clear spacing. Use within the roadbed on highways where bicycles and pedestrians are excluded.

RECTANGULAR GRATE DETAILS

(See table below)

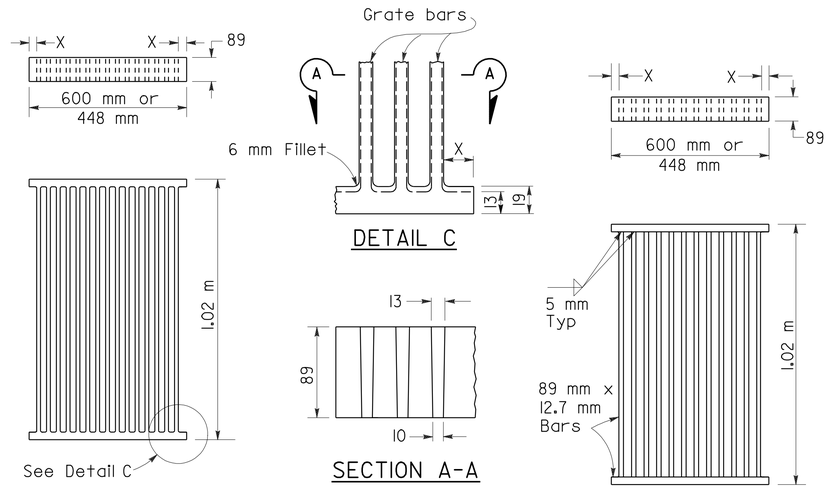

ALTERNATIVE CAST NODULAR IRON GRATE OR CAST STEEL GRATE

ALTERNATIVE WELDED GRATE

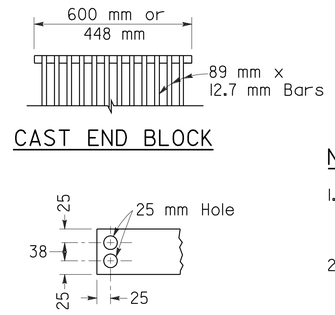

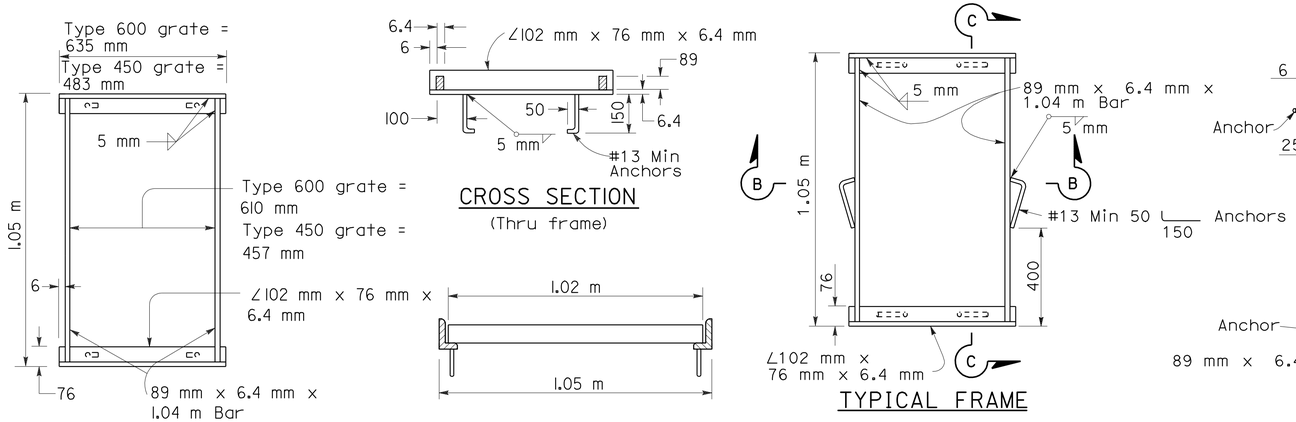

RECTANGULAR FRAME DETAILS

(For all rectangular grates)

ALTERNATIVE ANCHOR FOR RECTANGULAR FRAME

(For details not shown, See Rectangular Frame Details)

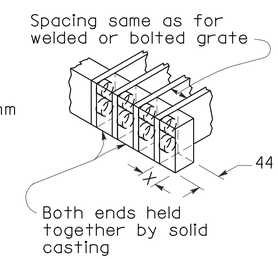

ALTERNATIVE CAST NODULAR IRON OR CAST STEEL END BLOCK GRATE

NOTES

1. Grate type numbers refer to approximate width of grate in millimeters and number of bars, respectively.
2. Contractor has the option of using cast nodular iron, cast steel, welded, bolted, or cast end block grate.
3. See Special Provisions for requirements pertaining to galvanizing or asphalt dipping of grates and frames.
4. Rounded top of bars optional on all grates.
5. Pipe inlets with a grate shall be placed so that bars parallel direction of principle surface flow.
6. Full penetration butt welds may be substituted for the fillet welds on all anchors.
7. Standard square, hexagon, round or equivalent headed anchors may be substituted for the right angle hooks on the anchors shown on this plan.
8. Grate and frame weights are based on welded grates (weights of face angles, steps, protection bars, etc. are not included).

GRATE BAR SPACING TABLE

TYPE	No. OF BARS	CLEAR BAR SPACING (mm)	X (mm)
450-9	9	35	27
600-9	9	51	40
600-12	12	35	32

INLET TYPE	COVER TYPE	MASS (kg)
OS	PLATE	79
OL-2.1	PLATE	77
OL-3.0	PLATE	77
OL-4.3	PLATE	77
OL-6.4	PLATE	77
OCP	PLATE	51
OCPI	PLATE	51
OCPI	REDWOOD	19
OMP	PLATE	80
OMPI	PLATE	80

INLET TYPE	GRATE TYPE	No. OF GRATES	MASS (kg)
GDO	600-12	2	288
GOL-2.1	600-12	1	148
GOL-3.0	600-12	1	148
G0,G1,G2,G3,G4(TYPE 600)	600-9	1	119
	600-12	1	148
G4(TYPE 450),G5,G6	450-9	1	113
GT-1	450-9	2	226
GT-2	450-9	2	226
GT-3	600-12	2	296
GT-4	600-12	2	296
TRASH RACK			10

BASIS FOR MISC IRON & STEEL FINAL PAY MASSES FOR DRAINAGE INLETS

(See General Notes, No. 8)

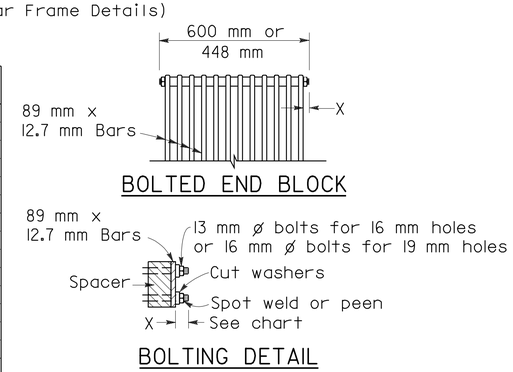

ALTERNATIVE BOLTED GRATE

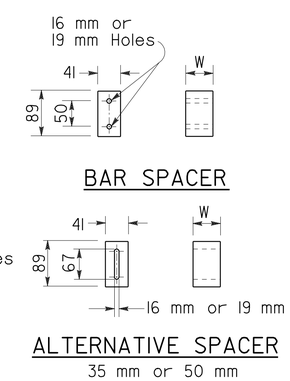

STATE OF CALIFORNIA
DEPARTMENT OF TRANSPORTATION

GRATE DETAILS

NO SCALE

ALL DIMENSIONS ARE IN MILLIMETERS UNLESS OTHERWISE SHOWN

RSP D77A DATED JANUARY 18, 2008 SUPERSEDES STANDARD PLAN D77A DATED JULY 1, 2004 - PAGE 155 OF THE STANDARD PLANS BOOK DATED JULY 2004.

REVISED STANDARD PLAN RSP D77A

2004 REVISED Std PLAN RSP D77A

To accompany plans dated 11-2-09

Caltrans Metric

DIST	COUNTY	ROUTE	KILOMETER POST TOTAL PROJECT	SHEET NO.	TOTAL SHEETS
02	Plu	70	56.5/57.2	70	149

Raymond Don Tsztoo
REGISTERED CIVIL ENGINEER

June 6, 2008
PLANS APPROVAL DATE

REGISTERED PROFESSIONAL ENGINEER Raymond Don Tsztoo No. C37332 Exp. 6-30-08 STATE OF CALIFORNIA

The State of California or its officers or agents shall not be responsible for the accuracy or completeness of electronic copies of this plan sheet.

To get to the Caltrans web site, go to: http://www.dot.ca.gov

ANNULAR AND HELICAL PROFILE

COUPLING TYPE	PIPE CORRUGATION (mm)	PIPE SIZE (mm)	W OR A (mm)	PIPE WALL THICKNESS CSP (mm)	PIPE WALL THICKNESS CAP (mm)	BAND THICKNESS CSP (mm)	BAND THICKNESS CAP (mm)	BAR AND STRAP (CSP ONLY) STRAP THICKNESS (mm)	BOLTS (mm ø)	BAR Dia (mm)	BAR YIELD STRENGTH (MPa)	ANGLE DIMENSIONS CSP (mm)	ANGLE DIMENSIONS CAP (mm)	BOLTS (No.-mm ø) CSP	BOLTS (No.-mm ø) CAP	RIVETS ANGLE TO BAND CSP	RIVETS ANGLE TO BAND CAP	SPOT WELDS ANGLE TO BAND CSP
TWO PIECE INTEGRAL FLANGE	38 x 6.5	150 - 250	178	1.32 - 2.01	1.22 - 1.52	1.32	1.52							2-10	2-10			
		300 - 450	178	1.32 - 2.01		1.63								2-13				
	68 x 13	300 - 600	178	1.32 - 2.01	1.52 - 2.67	1.63	1.52							2-13	2-13			
UNIVERSAL	68 x 13	THROUGH 900	305	1.32 - 3.51	1.52 - 3.43	1.32	1.52					51 x 51 x 4.8	51 x 51 x 4.8	3-13	3-13	3-9.5 mm	3-9.5 mm	3-15 mm
		1050 - 1500	305	1.32 - 4.27	1.91 - 4.17	1.32	1.52					51 x 51 x 4.8	51 x 51 x 4.8	3-13	3-13	3-9.5 mm	3-9.5 mm	5-15 mm
		THROUGH 1800	305	1.32 - 4.27	4.17	1.32	2.67	2.01	13	22	220	51 x 51 x 4.8	51 x 51 x 4.8	3-13	3-13	3-9.5 mm	3-9.5 mm	5-15 mm
		1950 - 2100	413	4.27		2.01		DOUBLE 2.01	13	22	220							
ANNULAR	68 x 13	THROUGH 900	178	1.63 - 3.51	1.52 - 3.43	1.32	1.52	2.01	13	22	220	51 x 51 x 4.8	51 x 51 x 4.8	2-13	2-13	3-9.5 mm	3-9.5 mm	3-15 mm
		1050 - 1800	305	1.63 - 4.27	1.91 - 4.17	1.32	2.67	2.01	13	22	220	51 x 51 x 4.8	51 x 51 x 4.8	3-13	3-13	3-9.5 mm	3-9.5 mm	5-15 mm
		1950 - 2100	305	4.27		2.01		2.77	13	22	310	51 x 51 x 4.8		3-13		3-9.5 mm		5-15 mm
	75 x 25	1200 - 2250	355	1.63 - 2.77		1.32		2.01	13	22	220	51 x 51 x 4.8		3-13		3-9.5 mm		5-15 mm
		2400 - 3000	355	2.01 - 2.77		1.32		2.77	13	22	310	51 x 51 x 4.8		3-13		4-9.5 mm		
		1050 - 2700	355		1.52 - 3.43		1.52						51 x 51 x 4.8		3-13		3-9.5 mm	
HELICAL	68 x 13	THROUGH 900	305	1.32 - 3.51	1.52 - 3.43	1.32	1.52	2.01	13	22	220	51 x 51 x 4.8	51 x 51 x 4.8	3-13	3-13	3-9.5 mm	3-9.5 mm	3-15 mm
		1050 - 1800	305	1.32 - 4.27	1.91 - 4.17	1.32	1.52	2.01	13	22	220	51 x 51 x 4.8	51 x 51 x 4.8	3-13	3-13	3-9.5 mm	3-9.5 mm	5-15 mm
		1950 - 2100	305	4.27		2.01		2.77	13	22	310	51 x 51 x 4.8		3-13		3-9.5 mm		5-15 mm
	75 x 25	1200 - 2250	355	1.63 - 2.77		1.32		2.01	13	22	220	51 x 51 x 4.8		3-13		3-9.5 mm		5-15 mm
		2400 - 3000	355	2.01 - 2.77		1.32		2.77	13	22	310	51 x 51 x 4.8		3-13		4-9.5 mm		
		1050 - 2700	355		1.52 - 3.43		1.52						51 x 51 x 4.8		3-13		3-9.5 mm	
HUGGER	68 x 13 REROLLED END	300 - 1350	100	1.32 - 2.77		1.32						64 x 38 x 4.8	64 x 38 x 4.8	1-13				3-15 mm
		1500 - 1650	100	2.77		1.63						64 x 38 x 4.8	64 x 38 x 4.8	1-13				3-15 mm
		900 - 1200	100	3.51		1.63						64 x 38 x 4.8	64 x 38 x 4.8	1-13				3-15 mm
		THROUGH 1800	267	1.32 - 4.27		1.32		2.01	13	22	220							
		1950 - 2100	267	4.27		2.01		2.77	13	22	310							
	75 x 25 REROLLED END	1200 - 2250	267	1.63 - 2.77		1.32		2.01	13	22	220							
		2400 - 3000	267	2.01 - 2.77		1.32		2.77	13	22	310							
	125 x 25 REROLLED END	1200 - 1650	190	1.63 - 2.77		1.63		2.01	13	22	220	64 x 38 x 4.8	64 x 38 x 4.8	1-13				3-15 mm
		1800 - 2250	190	1.63 - 2.01		1.63		2.01	13	22	220	64 x 38 x 4.8	64 x 38 x 4.8	1-13				3-15 mm
		1200 - 2250	190	1.63 - 3.51		1.63		2.01	13	22	220							
		1200 - 3000	305 SEE	1.63 - 2.77		1.63		2.01	13	22	220							
		1200 - 2100	305 NOTE	3.51		1.63		2.01	13	22	220							
		2250 - 3000	305 11	3.51		1.63		DOUBLE 2.01	13	22	220							

SPIRAL RIB PROFILE

COUPLING TYPE	PIPE CORRUGATION (mm)	PIPE SIZE (mm)	W (mm)	PIPE WALL THICKNESS SSRP (mm)	PIPE WALL THICKNESS ASRP (mm)	BAND THICKNESS SSRP (mm)	BAND THICKNESS ASRP (mm)	BAR AND STRAP (SSRP ONLY) STRAP THICKNESS (mm)	BOLTS (mm ø)	BAR Dia (mm)	BAR YIELD STRENGTH (MPa)	ANGLE DIMENSIONS SSRP (mm)	ANGLE DIMENSIONS ASRP (mm)	BOLTS (No.- mm ø) SSRP	BOLTS (No.- mm ø) ASRP	RIVETS ANGLE TO BAND SSRP	RIVETS ANGLE TO BAND ASRP	SPOT WELDS ANGLE TO BAND SSRP
ANNULAR	68 x 13 * REROLLED END	600 - 900	305	1.63 - 2.77	1.52 - 2.67	1.32	1.52	2.01	13	22	220	51 x 51 x 4.8	51 x 51 x 4.8	3-13	3-13	3-9.5 mm	3-9.5 mm	5-15 mm
		1050 - 1500	305	1.63 - 2.77	1.91 - 2.67	1.32	2.67	2.01	13	22	220	51 x 51 x 4.8	51 x 51 x 4.8	3-13	3-13	3-9.5 mm	3-9.5 mm	5-15 mm
		1650 - 1800	305	1.63 - 2.77		1.32		2.01	13	22	220	51 x 51 x 4.8	51 x 51 x 4.8	3-13	3-13	3-9.5 mm	3-9.5 mm	5-15 mm
		1950 - 2900	305	2.01 - 2.77		2.01		2.77	13	22	310	51 x 51 x 4.8	51 x 51 x 4.8	3-13	3-13	3-9.5 mm	3-9.5 mm	5-15 mm
HUGGER	68 x 13 * REROLLED END	600 - 1800	267	1.63 - 2.77		1.32		2.01	13	22	220							
		1950 - 2100	267	2.77		2.01		2.77	13	22	310							

* See Note 14.

14. All profiles of Spiral Rib Pipe (19 mm x 19 mm ribs at 191 mm pitch and 19 mm x 25 mm ribs at 292 mm pitch in both steel and aluminum and 19 mm x 25 mm ribs at 216 mm pitch in steel only) shall be manufactured with rerolled ends. Corrugation profile of the rerolled ends shall be 68 mm x 13 mm annual corrugations with a minimum of two full corrugations at each end.

ALL DIMENSIONS ARE IN MILLIMETERS UNLESS OTHERWISE SHOWN

NOTES

1. All ferrous metal coupling band connection hardware shall be galvanized or electro-plated in accordance with the Standard Specifications.
2. For helically corrugated coupling bands, the connection angles may be oriented parallel to the pipe axis, provided connecting holes are slotted lengthwise sufficiently to allow adjustment for the helix angle.
3. Tension strap may be connected to band with either spot welds or fillet welds that develop minimum required strength of strap.
4. Use 32 mm gage line dimension on attached angle leg for rivets and spot welds.
5. Band thickness shall not be less than:
   a. 3 standard thicknesses lighter than the thickness of the pipe for Corrugated Steel Pipe.
   b. 2 standard thicknesses lighter than the thickness of the pipe and in no case lighter than 1.5 mm for Corrugated Aluminum Pipe.
6. Dimensions, thicknesses and strengths shown are minimum.
7. For pipe arches use same width band as for round pipe of equal periphery.
8. Fillet welds of equivalent strenght may be substituted for spot welds or rivets.
9. Spot welds shall develop minimum required strength of strap.
10. Pipe with rerolled ends having at least two 68 mm x 13 mm annular corrugations at each end with or without an upturned flange may be connected with any of the annular coupling bands shown for pipe of the same diameter and wall thickness and having 68 mm x 13 mm corrugations.
11. In the case of H-305 huggerbands, two piece bands are required for diameters through 2400 mm and three piece bands are required for diameters 2550 mm through 3000 mm.
12. Two piece bands are required for pipes greater than 1050 mm diameter.
13. The 57 mm x 51 mm x 2.8 mm thick galvanized die-formed angle connector may be used in lieu of the 51 mm x 51 mm 4.8 mm angle connector for standard joints only on pipes through 1800 mm diameter.

STATE OF CALIFORNIA
DEPARTMENT OF TRANSPORTATION

CORRUGATED METAL PIPE COUPLING DETAILS No. 5 STANDARD JOINT

NO SCALE

RSP D97E DATED JUNE 6, 2008 SUPERSEDES STANDARD PLAN D97E DATED July 1, 2004 - PAGE 187 OF THE STANDARD PLANS BOOK DATED July 2004.

REVISED STANDARD PLAN RSP D97E

2004 REVISED Std PLAN RSP D97E

05-19-08

DIST	COUNTY	ROUTE	KILOMETER POST TOTAL PROJECT	SHEET NO.	TOTAL SHEETS
02	Plu	70	56.5/57.2	71	149

Caltrans Metric

Randell D. Hiatt
REGISTERED CIVIL ENGINEER

June 6, 2008
PLANS APPROVAL DATE

REGISTERED PROFESSIONAL ENGINEER
Randell D. Hiatt
No. C50200
Exp. 6-30-09
CIVIL
STATE OF CALIFORNIA

The State of California or its officers or agents shall not be responsible for the accuracy or completeness of electronic copies of this plan sheet.

To get to the Caltrans web site, go to: http://www.dot.ca.gov

To accompany plans dated 11-2-09

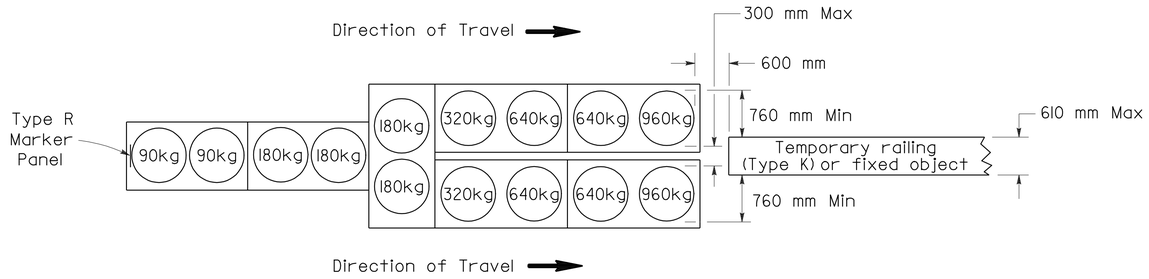

ARRAY 'TU14'

Approach speed 70 km/h or more

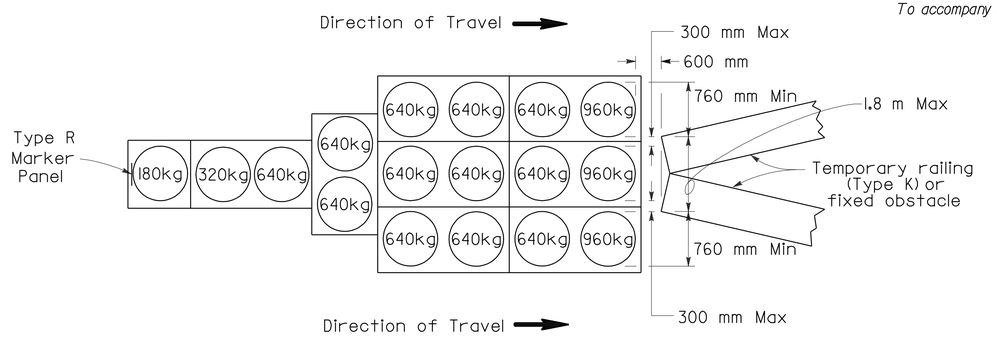

ARRAY 'TU17'

Approach speed less than 70 km/h

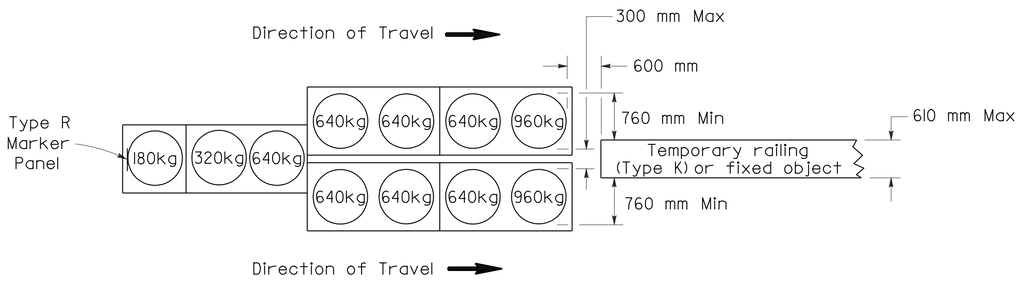

ARRAY 'TU11'

Approach speed less than 70 km/h

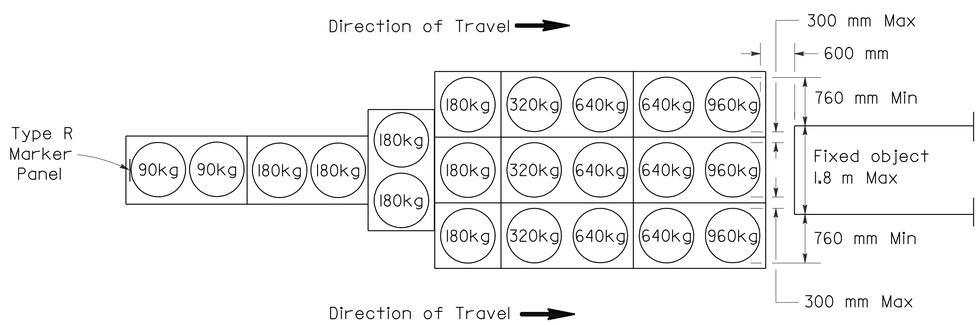

ARRAY 'TU21'

Approach speed 70 km/h or more

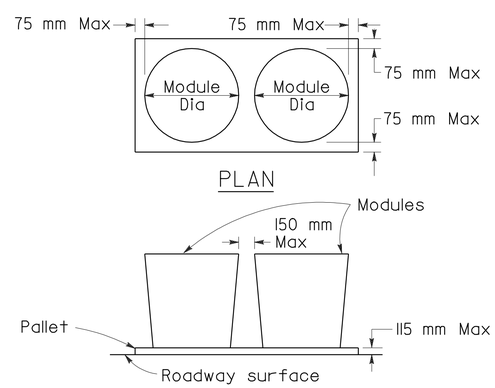

CRASH CUSHION PALLET DETAIL

See Note 7

NOTES

1. (XXX) Indicates sand filled module location and mass of sand in kilograms for each module. Module spacing is based on the greater diameter of the module.
2. All sand masses are nominal.
3. Temporary crash cushion arrays shall not encroach on the traveled way.
4. Place the top of Type R marker panel 25 mm below the module lid.
5. Refer to Standard Plan A73B for marker details.
6. Approach speeds indicated conform to NCHRP 350 Report criteria.
7. Use of Pallets is optional.

STATE OF CALIFORNIA
DEPARTMENT OF TRANSPORTATION

TEMPORARY CRASH CUSHION, SAND FILLED (UNIDIRECTIONAL)

NO SCALE

ALL DIMENSIONS ARE IN MILLIMETERS UNLESS OTHERWISE SHOWN

RSP T1A DATED JUNE 6, 2008 SUPERSEDES STANDARD PLAN T1A
DATED July 1, 2004 - PAGE 211 OF THE STANDARD PLANS BOOK DATED July 2004.

REVISED STANDARD PLAN RSP T1A

2004 REVISED Std PLAN RSP T1A

5-16-08

DIST	COUNTY	ROUTE	KILOMETER POST TOTAL PROJECT	SHEET NO.	TOTAL SHEETS
02	Plu	70	56.5/57.2	72	149

Caltrans Metric

Randell D. Hiatt
REGISTERED CIVIL ENGINEER

June 6, 2008
PLANS APPROVAL DATE

REGISTERED PROFESSIONAL ENGINEER
Randell D. Hiatt
No. C50200
Exp. 6-30-09
CIVIL
STATE OF CALIFORNIA

The State of California or its officers or agents shall not be responsible for the accuracy or completeness of electronic copies of this plan sheet.

To get to the Caltrans web site, go to: http://www.dot.ca.gov

To accompany plans dated 11-2-09

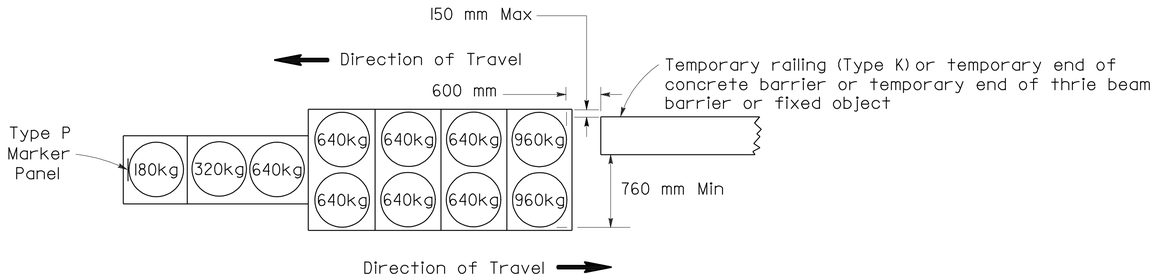

ARRAY 'TBI1'

Approach speed less than 70 km/h

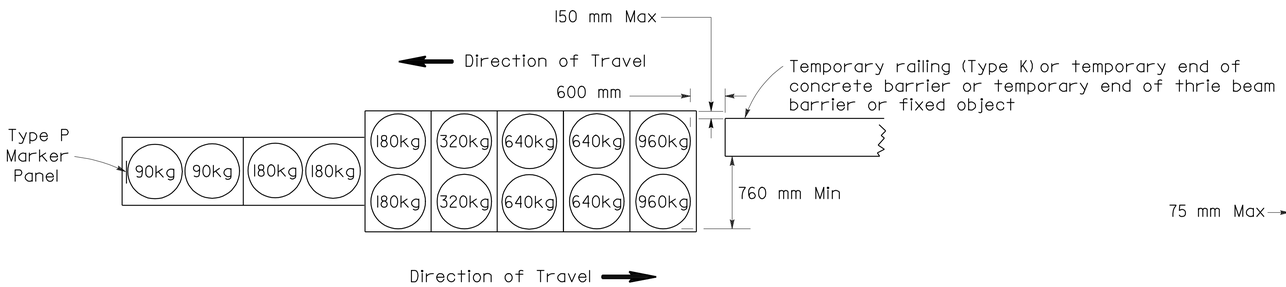

ARRAY 'TBI4'

Approach speed 70 km/h or more

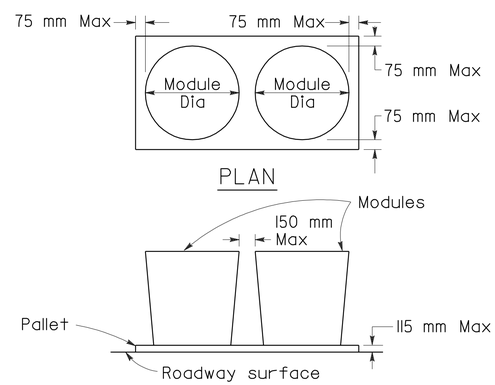

CRASH CUSHION PALLET DETAIL

See Note 7

NOTES

1. (XXX) Indicates sand filled module location and mass of sand in kilograms for each module. Module spacing is based on the greater diameter of the module.
2. All sand masses are nominal.
3. Temporary crash cushion arrays shall not encroach on the traveled way.
4. Place the Type P marker panel so that the bottom of the panel rests upon the pallet.
5. Refer to Standard Plan A73B for marker details.
6. Approach speeds indicated conform to NCHRP 350 Report criteria.
7. Use of Pallets is optional.

STATE OF CALIFORNIA
DEPARTMENT OF TRANSPORTATION

TEMPORARY CRASH CUSHION, SAND FILLED (BIDIRECTIONAL)

NO SCALE

ALL DIMENSIONS ARE IN MILLIMETERS UNLESS OTHERWISE SHOWN

RSP T1B DATED JUNE 6, 2008 SUPERSEDES STANDARD PLAN T1B DATED July 1, 2004 - PAGE 212 OF THE STANDARD PLANS BOOK DATED July 2004.

REVISED STANDARD PLAN RSP T1B

2004 REVISED Std PLAN RSP T1B

5-16-08

DIST	COUNTY	ROUTE	KILOMETER POST TOTAL PROJECT	SHEET NO.	TOTAL SHEETS
02	Plu	70	56.5/57.2	73	149

Caltrans Metric

Randell D. Hiatt
REGISTERED CIVIL ENGINEER

June 6, 2008
PLANS APPROVAL DATE

REGISTERED PROFESSIONAL ENGINEER
Randell D. Hiatt
No. C50200
Exp. 6-30-09
CIVIL
STATE OF CALIFORNIA

The State of California or its officers or agents shall not be responsible for the accuracy or completeness of electronic copies of this plan sheet.

To get to the Caltrans web site, go to: http://www.dot.ca.gov

To accompany plans dated 11-2-09

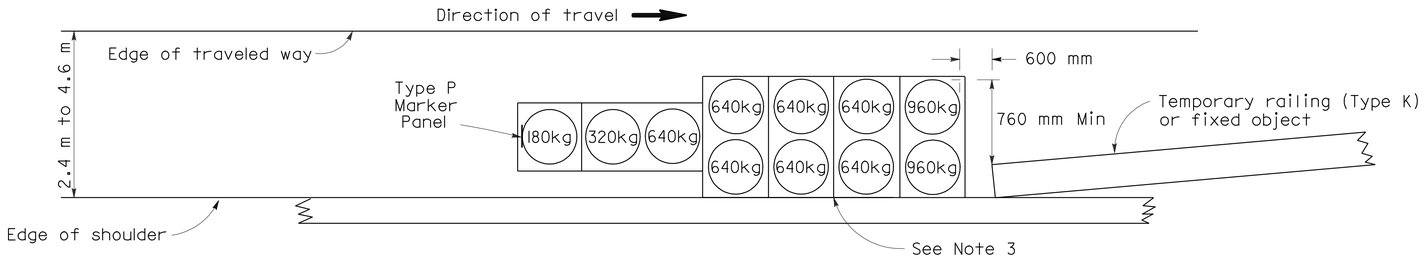

ARRAY 'TSI1'

Approach speed less than 70 km/h
See Note 9

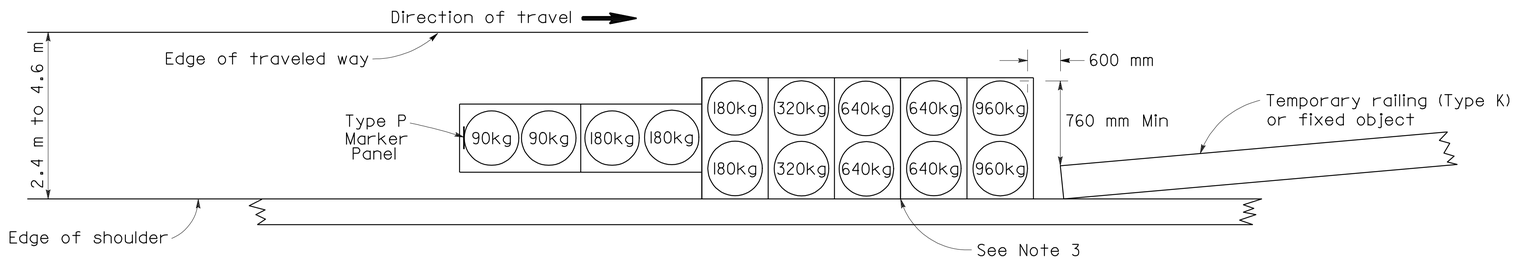

ARRAY 'TSI4'

Approach speed 70 km/h or more
See Note 9

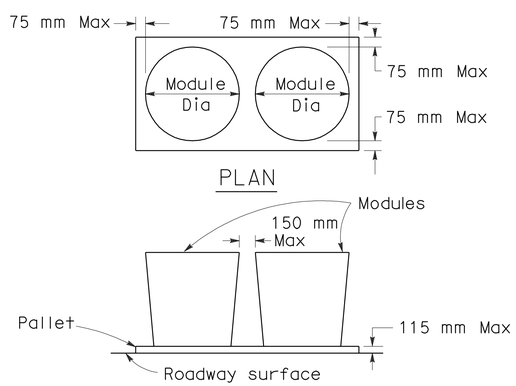

CRASH CUSHION PALLET DETAIL

See Note 11

NOTES

1. (XXX) Indicates sand filled module location and mass of sand in kilograms for each module. Module spacing is based on the greater diameter of the module.
2. All sand masses are nominal.
3. The temporary crash cushion arrays shown on this plan shall be used only in locations where there will be traffic on one side of the temporary crash cushion array.
4. If the fixed object or approach end of the temporary railing is less than 4.60 meters from the edge of traveled way, a temporary crash cushion is required.
5. Temporary crash cushion arrays shall not encroach on the traveled way.
6. Arrays for median shoulders shall conform to details shown on this plan for outside shoulders.
7. Place the Type P marker panel so that the bottom of the panel rest upon the pallet and faces traffic.
8. Refer to Standard Plan A73B for marker details.
9. For shoulder widths less than 2.4 m, appropriate approved crash cushion protection, other than sand filled modules, shall be provided at fixed objects and at approach ends of temporary railing. The specific type of crash cushion shall be as shown on the project plans or as specified in the Special Provisions, or if not shown on the project plans or specified in the Special Provisions, shall be as approved by the Engineer.
10. Approach speeds indicated conform to NCHRP 350 Report criteria.
11. Use of Pallets is optional.

STATE OF CALIFORNIA
DEPARTMENT OF TRANSPORTATION

TEMPORARY CRASH CUSHION, SAND FILLED (SHOULDER INSTALLATIONS)

NO SCALE

ALL DIMENSIONS ARE IN MILLIMETERS UNLESS OTHERWISE SHOWN

RSP T2 DATED JUNE 6, 2008 SUPERSEDES STANDARD PLAN T2
DATED July 1, 2004 - PAGE 213 OF THE STANDARD PLANS BOOK DATED July 2004.

REVISED STANDARD PLAN RSP T2

2004 REVISED Std PLAN RSP T2

5-16-08

To accompany plans dated 11-2-09

Caltrans Metric

DIST	COUNTY	ROUTE	KILOMETER POST TOTAL PROJECT	SHEET NO.	TOTAL SHEETS
02	Plu	70	56.5/57.2	74	149

REGISTERED CIVIL ENGINEER

November 17, 2006
PLANS APPROVAL DATE

REGISTERED PROFESSIONAL ENGINEER Greg W. Edwards No. C36386 Exp. 6-30-08 CIVIL STATE OF CALIFORNIA

The State of California or its officers or agents shall not be responsible for the accuracy or completeness of electronic copies of this plan sheet.

To get to the Caltrans web site, go to: http://www.dot.ca.gov

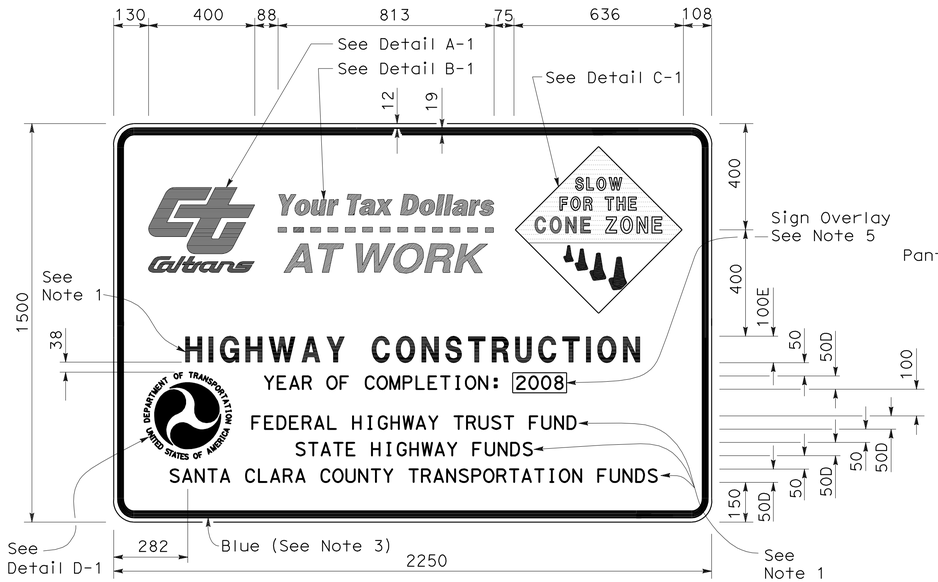

TYPE 1

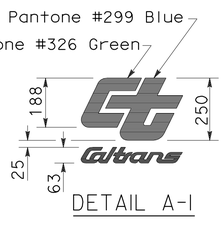

DETAIL A-1

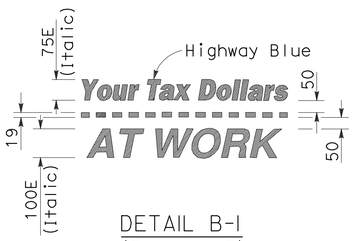

DETAIL B-1
(See Note 3)

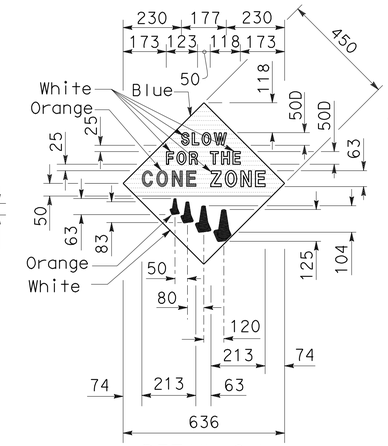

DETAIL C-1
(See Note 4)

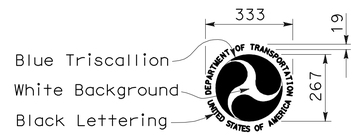

DETAIL D-1
(See Note 6)

NOTES:

1. The sign messages shown for type of project and fund types are examples only. See the Special Provisions for the applicable type of project and fund type messages to be used.
2. Except as otherwise shown, the legend of sign shall be black on a white background (non-reflective).
3. The border of the signs and details "B-1" and "B-2" shall be blue (non-reflective).
4. The diamond in details "C-1" and "C-2" shall be blue for the background of message, " SLOW FOR THE CONE ZONE", and white background for the orange cones. The color and type of font for the "SLOW FOR THE CONE ZONE" message shall be: "SLOW" white D; "FOR THE" white D; "CONE" orange Arial font; "ZONE" white Arial font.
5. Year of completion of project construction shown on the overlay is an example only. See the Special Provisions.
6. Use when the Project involves Federal Highway Trust Fund.

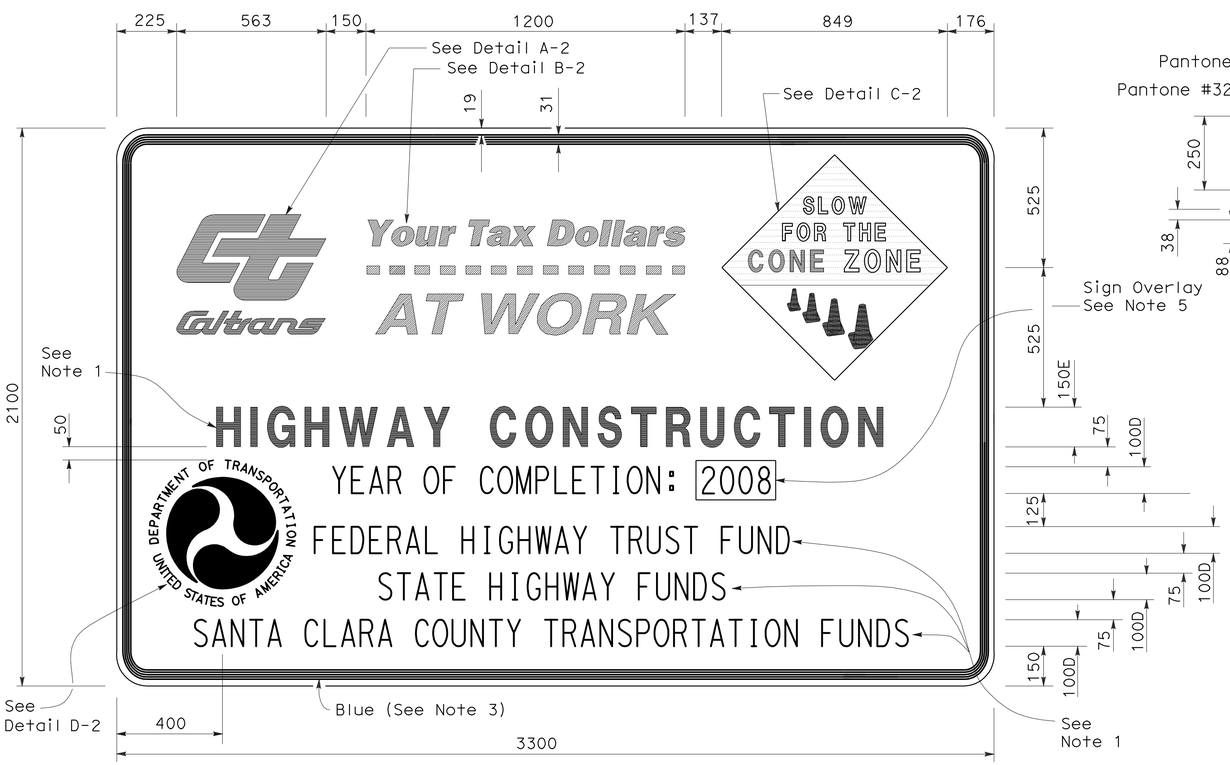

TYPE 2

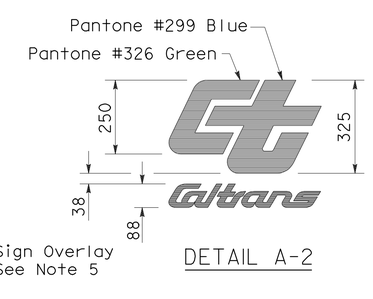

DETAIL A-2

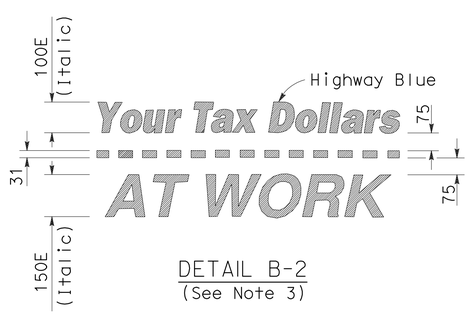

DETAIL B-2
(See Note 3)

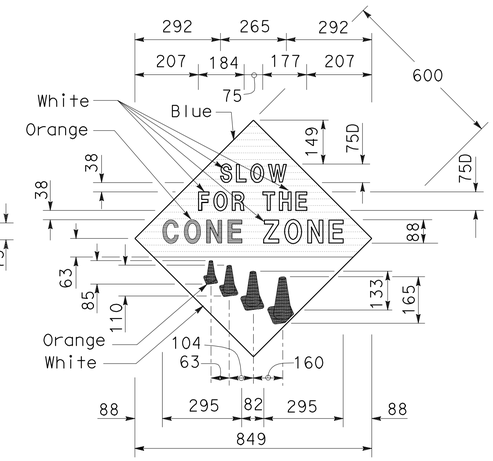

DETAIL C-2
(See Note 4)

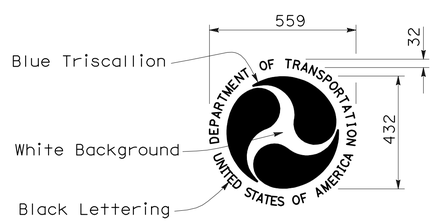

DETAIL D-2
(See Note 6)

STATE OF CALIFORNIA
DEPARTMENT OF TRANSPORTATION

CONSTRUCTION PROJECT FUNDING IDENTIFICATION SIGNS

NO SCALE

ALL DIMENSIONS ARE IN MILLIMETERS UNLESS OTHERWISE SHOWN

RSP T7 DATED NOVEMBER 17, 2006 SUPERSEDES RSP T7 DATED APRIL 28, 2005 AND STANDARD PLAN T7 DATED JULY 1, 2004-PAGE 217 OF THE STANDARD PLANS BOOK DATED JULY 2004.

REVISED STANDARD PLAN RSP T7

2004 REVISED Std PLAN RSP T7

9-7-06

DIST	COUNTY	ROUTE	KILOMETER POST TOTAL PROJECT	SHEET No.	TOTAL SHEETS
02	Plu	70	56.5/57.2	75	149

REGISTERED CIVIL ENGINEER

April 28, 2005
PLANS APPROVAL DATE

REGISTERED PROFESSIONAL ENGINEER G.W. Edwards No. C36386 Exp. 6-30-06 CIVIL STATE OF CALIFORNIA

The State of California or its officers or agents shall not be responsible for the accuracy or completeness of electronic copies of this plan sheet.

To get to the Caltrans web site, go to: http://www.dot.ca.gov

To accompany plans dated 11-2-09

Caltrans Metric

NOTES

Unless otherwise specified in the special provisions, all temporary warning signs shall have black legend on orange background.

California code are designated by (CA). Otherwise, Federal codes are shown.

TYPICAL LANE CLOSURE WITH REVERSIBLE CONTROL

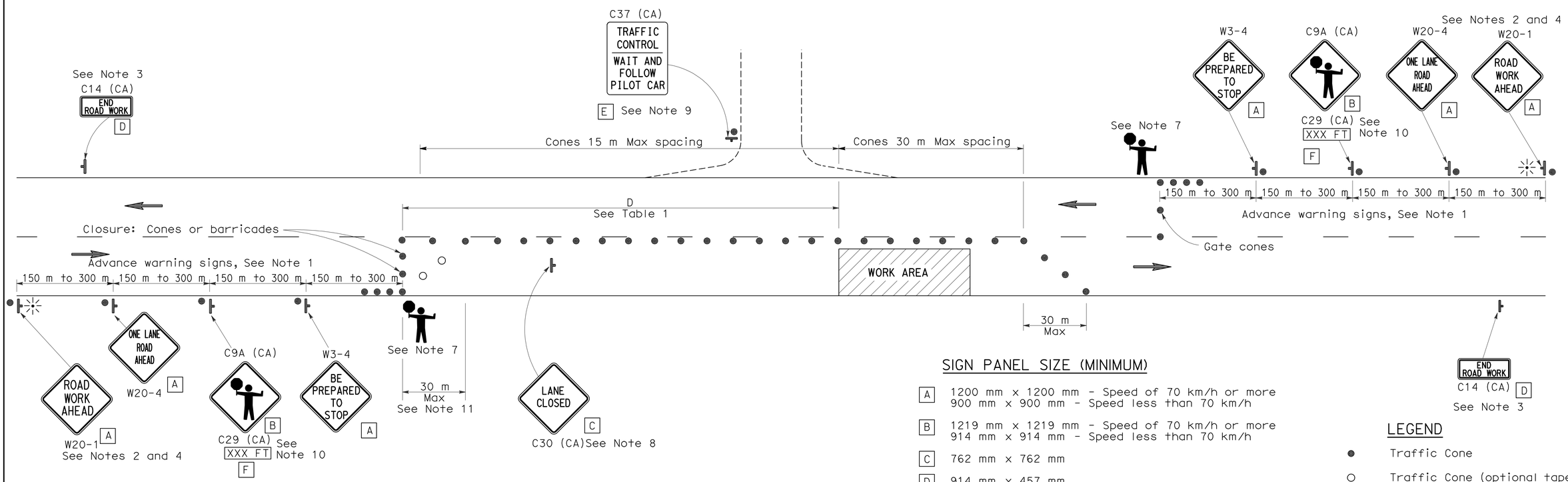

SIGN PANEL SIZE (MINIMUM)

- A — 1200 mm x 1200 mm - Speed of 70 km/h or more; 900 mm x 900 mm - Speed less than 70 km/h
- B — 1219 mm x 1219 mm - Speed of 70 km/h or more; 914 mm x 914 mm - Speed less than 70 km/h
- C — 762 mm x 762 mm
- D — 914 mm x 457 mm
- E — 914 mm x 1067 mm
- F — 914 mm x 229 mm

LEGEND

- Traffic Cone
- Traffic Cone (optional taper)
- Temporary Sign
- Direction of Travel
- Portable Flashing Beacon
- Flagger

NOTES

1. Where approach speeds are low, advance warning signs may be placed at 90 m spacing, and closer in urban areas.
2. Each advance warning sign in each direction of travel shall be equipped with at least two flags for daytime closure. Each flag shall be at least 400 mm x 400 mm in size and shall be orange or fluorescent red-orange in color. Flashing beacons shall be placed at the locations indicated for lane closure during hours of darkness.
3. A C14 (CA) "END ROAD WORK" sign, as appropriate, shall be placed at the end of the lane control unless the end of work area is obvious, or ends within a larger project's limits.
4. If the W20-1 sign would follow within 600 m of a stationary W20-1 or C11 (CA) "ROAD WORK NEXT _____ MILES", use a C16 (CA) sign for the first advance warning sign.
5. All cones used for lane closures during the hours of darkness shall be fitted with retroreflective bands (or sleeves) as specified in the specifications.
6. Portable delineators, placed at one-half the spacing indicated for traffic cones, may be used instead of cones for daytime closures only.
7. Additional advance flaggers may be required. Flagger should stand in a conspicuous place, be visible to approaching traffic as well as approaching vehicles after the first vehicle has stopped. During the hours of darkness, the flagging-station and flagger shall be illuminated and clearly visible to approaching traffic. The illumination footprint of the lighting on the ground shall be at least 6 m in diameter. Place a minimum of four cones at 15 m intervals in advance of flagger station as shown.
8. Place C30 (CA) "LANE CLOSED" sign at 150 to 300 m intervals throughout extended work areas. They are optional if the work area is visible from the flagger station.
9. When a pilot car is used, place a C37 (CA) "TRAFFIC CONTROL-WAIT AND FOLLOW PILOT CAR" sign at all intersections within traffic control area. Signs shall be clean and visible at all times.
10. An optional C29 (CA) sign may be placed below the C9A (CA) sign.
11. Traffic cones or barricades may be placed on the optional taper as shown, barricades shall be Type I, II, or III.

TABLE I

Approach Speed	Minimum D	Downgrade Minimum D *
km/h	m	m
30	60	72
40	60	72
50	60	72
60	90	108
70	90	108
80	150	180
90	150	180
100	150	180
110	170	204

* Use on substained downgrade steeper than -3 percent and longer than 1.6 km.

STATE OF CALIFORNIA
DEPARTMENT OF TRANSPORTATION

TRAFFIC CONTROL SYSTEM FOR LANE CLOSURE ON TWO LANE CONVENTIONAL HIGHWAYS

NO SCALE

ALL DIMENSIONS ARE IN MILLIMETERS UNLESS OTHERWISE SHOWN

RSP T13 DATED APRIL 28, 2005 SUPERSEDES STANDARD PLAN T13 DATED JULY 1, 2004-PAGE 222 OF THE STANDARD PLANS BOOK DATED JULY 2004.

REVISED STANDARD PLAN RSP T13

2004 REVISED Std PLAN RSP T13

DIST	COUNTY	ROUTE	KILOMETER POST TOTAL PROJECT	SHEET NO.	TOTAL SHEETS
02	Plu	70	56.5/57.2	76	149

Caltrans Metric

REGISTERED ELECTRICAL ENGINEER

October 5, 2007
PLANS APPROVAL DATE

REGISTERED PROFESSIONAL ENGINEER Jeffery G. McRae No. E14512 Exp. 6-30-08 ELECTRICAL STATE OF CALIFORNIA

The State of California or its officers or agents shall not be responsible for the accuracy or completeness of electronic copies of this plan sheet.

To get to the Caltrans web site, go to: http://www.dot.ca.gov

To accompany plans dated 11-2-09

2004 REVISED Std PLAN RSP ES-1A

ELECTROLIERS

STANDARD TYPES
15, 15D
15 STRUCTURE
21, 21D STRUCTURE
30
31
32
35
36-20A

High mast lighting standard

Double arm lighting standard

Existing electrolier

Electrolier foundation (Future installation)

NOTES

1. Luminaires shall be 310 W HPS when installed on Type 21, 21D, 30, 31, 32, 35 and 36-20A Standards, unless otherwise specified. Luminaires shall be 200 W HPS when installed on other type standards or poles, unless otherwise specified.
2. Luminaires shall be the cutoff type, ANSI Type III medium cutoff lighting distribution, unless otherwise specified.
3. Variations noted adjacent to symbol on project plans.

Electrolier (see project notes or project plans)

Luminaire on wood pole

STANDARD NOTES

- AB — Abandon. If applied to conduit, remove conductors.
- BC — Install pull box in existing conduit run.
- BP — Pedestrian barricade, type as indicated on plan.
- CB — Install conduit into existing pull box.
- CC — Connect new and existing conduit. Remove existing conductors and install conductors as indicated.
- CF — Conduit to remain for future use. Remove conductors. Install pull wire or rope.
- DH — Detector handhole.
- FA — Foundation to be abandoned.
- IS — Install sign on signal mast arm.
- NS — No slip base on standard.
- PEC — Photoelectric control.
- PEU — Photoelectric unit.
- RC — Equipment or material to be removed and become the property of the Contractor.
- RE — Remove electrolier, fuses and ballast. Tape ends of conductors.
- RL — Relocate equipment.
- RR — Remove and reuse equipment.
- RS — Remove and salvage equipment.
- SC — Splice new to existing conductors.
- SD — Service disconnect.
- SF — Standard to remain for future use. Remove luminaire, pole conductors, fuses and ballast. Tape disconnects.
- TSP — Telephone service point.

ABBREVIATIONS AND EQUIPMENT DESIGNATIONS

PROPOSED	EXISTING	
BBS	bbs	Battery backup system
BC	bc	Bolt circle
C	C	Conduit
CCTV	cctv	Closed circuit television
CKT	ckt	Circuit
CMS	cms	Changeable message sign
DLC	dlc	Loop detector lead-in cable
EMS	ems	Extinguishable message sign
EVC	evc	Emergency vehicle cable
EVD	evd	Emergency vehicle detector
FB	fb	Flashing beacon
FBCA	fbca	Flashing beacon control assembly
FBS	fbs	Flashing beacon with slip base
FO	fo	Fiber optic
G	G	Ground (Equipment Grounding Conductor)
GFCI	GFCI	Ground fault circuit interrupt
HAR	har	Highway advisory radio
HEX	hex	Hexagonal
HPS	hps	High pressure sodium
IISNS	iisns	Internally illuminated street name sign
ISL	isl	Induction sign lighting
LED	led	Light emitting diode
LMA	lma	Luminaire mast arm
LPS	lps	Low pressure sodium
LTG	ltg	Lighting
LUM	lum	Luminaire
MAT	mat	Mast arm mounted vehicle signal faces, top attachment
MAS	mas	Mast arm mounted vehicle signal faces, side attachment
MAS-4A	mas-4A	Mast arm mounted vehicle signal faces, side attachment - 4 signal section
MAS-4B	mas-4B	
MAS-4C	mas-4C	
MAS-5A	mas-5A	Mast arm mounted vehicle signal faces, side attachment - 5 signal section
MAS-5B	mas-5B	
MC	mc	Mercury contactor
M/M	m/m	Multiple to multiple transformer
MT	mt	Conduit with pull wire or rope only
MTG	mtg	Mounting
	mv	Mercury vapor lighting fixture
N	N	Neutral (Grounded Conductor)
NC	NC	Normally closed
NO	NO	Normally open
PB	pb	Pull box
PEC	pec	Photoelectric control (Type I, II, III, IV or V as shown)
PED	ped	Pedestrian
PEU	peu	Photoelectric unit
PPB	ppb	Pedestrian push button
RL	RL	Relocated equipment
RM	rm	Ramp metering
SB	sb	Slip base
SIC	sic	Signal interconnect cable
SIG	sig	Signal
SMA	sma	Signal mast arm
SNS	sns	Street name sign
SP	sp	Service point
TDC	tdc	Telephone demarcation cabinet
TMS	tms	Traffic monitoring station
TOS	tos	Traffic Operations System
VEH	veh	Vehicle
XFMR	xfmr	Transformer
COMM	comm	Communication
RWIS	rwis	Roadway weather information system

SOFFIT AND WALL MOUNTED LUMINAIRES

Pendant, 70 W HPS unless otherwise specified.

Flush, 70 W HPS unless otherwise specified.

Wall surface, 70 W HPS unless otherwise specified.

Existing soffit or wall luminaire to remain unmodified.

Existing soffit or wall luminaire to be modified as specified.

NOTE

Arrow indicates "street side" of luminaire.

STATE OF CALIFORNIA
DEPARTMENT OF TRANSPORTATION

ELECTRICAL SYSTEMS (SYMBOLS AND ABBREVIATIONS)

NO SCALE

ALL DIMENSIONS ARE IN MILLIMETERS UNLESS OTHERWISE SHOWN

RSP ES-1A DATED OCTOBER 5, 2007 SUPERSEDES STANDARD PLAN ES-1A DATED JULY 1, 2004-PAGE 413 OF THE STANDARD PLANS BOOK DATED JULY 2004.

REVISED STANDARD PLAN RSP ES-1A

DIST	COUNTY	ROUTE	KILOMETER POST TOTAL PROJECT	SHEET NO.	TOTAL SHEETS
02	Plu	70	56.5/57.2	77	149

REGISTERED ELECTRICAL ENGINEER

October 5, 2007
PLANS APPROVAL DATE

REGISTERED PROFESSIONAL ENGINEER Jeffery G. McRae No. E14512 Exp. 6-30-08 ELECTRICAL STATE OF CALIFORNIA

The State of California or its officers or agents shall not be responsible for the accuracy or completeness of electronic copies of this plan sheet.

To get to the Caltrans web site, go to: http://www.dot.ca.gov

To accompany plans dated 11-2-09

CONDUIT

PROPOSED	EXISTING	
		Lighting conduit, unless otherwise indicated or noted
		Traffic signal conduit
C	c	Communication conduit
T	t	Telephone conduit
F	f	Fire alarm conduit
FO	fo	Fiber optic conduit
		Conduit termination (RSP ES-9A C)
R	r	Conduit riser in/on structure or Service pole

SERVICE EQUIPMENT

PROPOSED	EXISTING	
OH	oh	Overhead lines
U	u	Wood pole "U" indicates utility owned
		Pole guy-with anchor
		Utility transformer-ground mounted
III		Service equipment enclosure type
		Service equipment enclosure door indicates front of enclosure
T	t	Telephone demarcation cabinet

POLE-MOUNTED SERVICE DESIGNATION

Type of installation

TYPE H SERVICE - 8.8 m ← Pole height above grade

ILLUMINATED OVERHEAD SIGN

PROPOSED	EXISTING	
		Overhead sign - Single post
		Overhead sign - Two post
		Overhead sign - Mounted on structure
		Overhead sign with electrolier

SIGNAL EQUIPMENT

PROPOSED	EXISTING	
		Pedestrian signal face
		Pedestrian push button post
		Pedestrian barricade
		Vehicle signal face (with backplate, 3-Section: red, yellow and green)
		Vehicle signal face with angle visors
PV	PV	Modifications of basic symbols: "L" Indicates all non-arrow sections louvered "LG" indicates louvered green section only "PV" indicates 300 mm programmed visibility sections "200" indicates all 200 mm sections (only when specified)
		Type 15TS and Vehicle signal face
		Vehicle signal face with red, yellow and green left arrow sections
		Vehicle signal face with red and yellow sections and up green arrow
		Vehicle signal face (5 Section) with red, yellow and green sections and yellow and green right arrows
		Type 1 Standard and attached vehicle signal faces
		Standard with signal mast arm only and attached vehicle signal faces and internally illuminated street name sign
		Type 33 Standard, Left-turn vehicle signal face and sign
		Standard with luminaire and signal mast arms and attached vehicle signal faces
		Cantilever flashing beacon Type 9 Frame, with a sign unless otherwise specified or indicated
Y Y	Y Y	Type 15-FBS Standard with two vehicle signal face sections with lens, backplate and visor with a sign
R	Y	Flashing beacon. One vehicle signal face section with lens, backplate and visor. "R" indicates red indication, "Y" indicates yellow indication
		Controller assembly. Door indicates front of cabinet
		Guard post
		Type 1 Standard with "Meter On" sign
		Emergency vehicle detector

NOTES

1. All signal sections shall be 300 mm unless shown otherwise.
2. Signal heads shall be provided with backplates unless shown otherwise.
3. Signal indication shall be LED.

STATE OF CALIFORNIA
DEPARTMENT OF TRANSPORTATION

ELECTRICAL SYSTEMS (SYMBOLS AND ABBREVIATIONS)

NO SCALE

ALL DIMENSIONS ARE IN MILLIMETERS UNLESS OTHERWISE SHOWN

RSP ES-1B DATED OCTOBER 5, 2007 SUPERSEDES STANDARD PLAN ES-1B DATED JULY 1, 2004-PAGE 414 OF THE STANDARD PLANS BOOK DATED JULY 2004.

REVISED STANDARD PLAN RSP ES-1B

2004 REVISED Std PLAN RSP ES-1B

8-9-07

DIST	COUNTY	ROUTE	KILOMETER POST TOTAL PROJECT	SHEET NO.	TOTAL SHEETS
02	Plu	70	56.5/57.2	78	149

Caltrans Metric

REGISTERED ELECTRICAL ENGINEER

October 5, 2007
PLANS APPROVAL DATE

REGISTERED PROFESSIONAL ENGINEER Jeffery G. McRae No. E14512 Exp. 6-30-08 ELECTRICAL STATE OF CALIFORNIA

The State of California or its officers or agents shall not be responsible for the accuracy or completeness of electronic copies of this plan sheet.

To get to the Caltrans web site, go to: http://www.dot.ca.gov

To accompany plans dated 11-2-09

EQUIPMENT IDENTIFICATION

ILLUMINATED SIGN IDENTIFICATION NUMBER:

Sign No. 12345 — Sign number - Place on post or structure

10 ISL SCI 1.0
- 1.0 — Transformer rating (kVA)
- SCI — Lighting control type
- ISL — Number and type of fixtures

Do NOT place on standard or structure

ELECTROLIER OR EQUIPMENT IDENTIFICATION NUMBER:

12345 - 4.6
- 4.6 — Mast arm length in meters, if shown. Do not place on standard or structure.
- 12345 — Equipment number - Place on standard or structure. Existing equipment numbers are shown in parenthesis

CONDUIT AND CONDUCTOR IDENTIFICATION:

41C, 2#10, 15#14, 2 DLC
- 2#10, 15#14, 2 DLC — Number and size of conductors and cables
- 41C — Size of conduit in millimeters

Ø1, Ø2, Ø2P, etc.	Traffic phase identification for signal faces, detectors and phase diagrams
1 2 3	Project note numbers
A B C	Equipment description, installation or item numbers
1 2 3	Conduit run numbers

SIGNAL AND LIGHTING STANDARD (TYPICAL DESIGNATION):

19A - 3 - 161
- 161 — Wind velocity=161 km/h
- 3 — Case 3 arm loading
- 19A — Standard type

Standard Plan sheet number
Detail number or letter

WIRING DIAGRAM LEGEND

P	Pole
CB	Circuit breaker
A	Ampere
V	Volt
M	Metered
UM	Unmetered
NB	Neutral bus
GB	Ground bus
G	Equipment grounding conductor
N	Grounded conductor (Neutral)

- External conductor
- Conductor or bus
- Tie point
- Contactor coil
- Contactor, Contact NO
- Terminal blocks
- Contactor, Contact NC
- Enclosure bond
- Grounding electrode
- Circuit breaker
- Receptacle

PULL BOXES

PROPOSED EXISTING

Pull box-No. 5 unless otherwise indicated or noted.

3 / 9A(21)

Pull box-Additional designations or descriptions

3 = No. 3½ pull box
5 = No. 5 pull box
6 = No. 6 pull box
7 = No. 7 (Ceiling pull box)
8 = No. 8 (Pendant soffit pull box)
9 = No. 9 pull box
9A = No. 9A pull box

(C) = Communications pull box
(E) = Pull box with extension
(S) = Sprinkler control pull box
(21) = Anchor bolts and conduit for future installation of Type 21 Standard
(T) = Traffic pull box

MISCELLANEOUS EQUIPMENT

PROPOSED	EXISTING	
CMS	cms	Changeable message sign
		Closed circuit television camera
		Highway advisory radio pole and antenna
EMS	ems	Extinguishable message sign
M V	m v	Detection device M = Microwave sensor V = Video image sensor

VEHICLE DETECTORS

5 J 9 U
- U — Vehicle detector designation
- 9 — U = Upper, L = Lower
- J — Slot number in input file
- 5 — Input file (I or J)
- Phase

PROPOSED	EXISTING	
		Type A detector loop. Outline of sawcut shown.
		Type B detector loop. Outline of sawcut shown.
		Type C detector loop. Outline of sawcut shown.
		Type D detector loop. Outline of sawcut shown.
		Type E detector loop. Outline of sawcut shown.
		Type Q detector loop. Outline of sawcut shown.
		Magnetic detector
DH	dh	Detector handhole
		Microwave or video detection zone

STATE OF CALIFORNIA
DEPARTMENT OF TRANSPORTATION

ELECTRICAL SYSTEMS (SYMBOLS AND ABBREVIATIONS)

NO SCALE

ALL DIMENSIONS ARE IN MILLIMETERS UNLESS OTHERWISE SHOWN

RSP ES-1C DATED OCTOBER 5, 2007 SUPERSEDES STANDARD PLAN ES-1C DATED JULY 1, 2004-PAGE 415 OF THE STANDARD PLANS BOOK DATED JULY 2004.

REVISED STANDARD PLAN RSP ES-1C

2004 REVISED Std PLAN RSP ES-1C

10-1-07

DIST	COUNTY	ROUTE	KILOMETER POST TOTAL PROJECT	SHEET NO.	TOTAL SHEETS
02	Plu	70	56.5/57.2	79	149

Caltrans Metric

Jeffery G. McRae
REGISTERED ELECTRICAL ENGINEER

October 5, 2007
PLANS APPROVAL DATE

REGISTERED PROFESSIONAL ENGINEER Jeffery G. McRae No. E14512 Exp. 6-30-08 ELECTRICAL STATE OF CALIFORNIA

The State of California or its officers or agents shall not be responsible for the accuracy or completeness of electronic copies of this plan sheet.

To get to the Caltrans web site, go to: http://www.dot.ca.gov

To accompany plans dated 11-2-09

NOTES - CONTROLLER CABINETS

1. Cabinet dimensions are nominal.
2. Foundations shall be located to provide 600 mm minimum clearance between face of curb and any portion of cabinet.
3. Type G, M, P, R, S and Model 336 cabinets shall be installed with the back toward the nearest lane of traffic.
4. The controller cabinet ground bus shall be bonded to the controller equipment enclosure.
5. In unpaved areas, a raised portland cement concrete pad shall be constructed in front of each controller cabinet. Pad shall be 900 mm x 900 mm x 100 mm for Type G cabinets and shall be 900 mm x 100 mm thick x width of foundation for Types M, P, R, S and Model 336 cabinets.
6. In unpaved areas, the top of foundation for Type G, P, R and S cabinets shall be 150 mm above surrounding grade. Top of foundation for Type M or Model 336 cabinet shall be 460 mm above surrounding grade.
7. In sidewalks and other paved areas, top of foundation for Type G cabinet shall be level with surrounding grade. Top of foundation for Type P, R and S cabinets shall be 90 mm above surrounding grade.
8. The steel pedestal, base plate, bolt circle and foundation for Type G cabinet shall be the same as that shown for a Type 1-C Standard. Pedestal shall be 640 mm - 760 mm in length. Anchor bolts shall be 19 mm ø x 460 mm with a 50 mm - 90° bend. Four bolts required per cabinet.
9. Type G cabinet shall be provided with a slipfitter to permit mounting an 114 mm outside diameter pedestal. Slipfitter shall be bolted to bottom of the cabinet.
10. Type G cabinet shall be provided with 8 screened, raintight holes, 13 mm diameter or larger, in the bottom of the cabinet.
11. A 25 mm drain shall be provided through the foundation of a Type M or Model 336 cabinet. Drain pipe shall be screened.
12. See Table for cabinet and foundation dimensions; "D" = Depth, "H" = Height and "W" = Width.
13. Cabinet shelves shall be adjustable for vertical spacing and shall be removable. Type M, P, R and S cabinets shall be provided with a minimum of two shelves.
14. Anchor bolts for Type M, P, R, S and Model 336 cabinets shall be 19 mm ø x 460 mm with a 50 mm - 90° bend.
15. An approved mastic or caulking compound shall be placed on the foundation prior to placing the cabinet to seal openings between bottom of cabinet and foundation.
16. Controller units, plug-mounted equipment, shelf-mounted equipment and wall-mounted equipment shall be located to permit safe and easy removal or replacement without removing any other piece of equipment.
17. Cabinet fan may be installed at an alternate location near the top of the cabinet when approved by the Engineer.
18. Where telephone interconnect is required, a minimum of 130 mm clear vertical space shall be provided inside the cabinet for the equipment.
19. Telephone interconnect conductors shall be enclosed in a 21C or larger conduit through the foundation. Type 4 metal conduit shall be used to separate telephone and power conductors in cabinets and pedestals.
20. For Model 332, 334 and 336 cabinet details, see "Traffic signal controller equipment specifications".

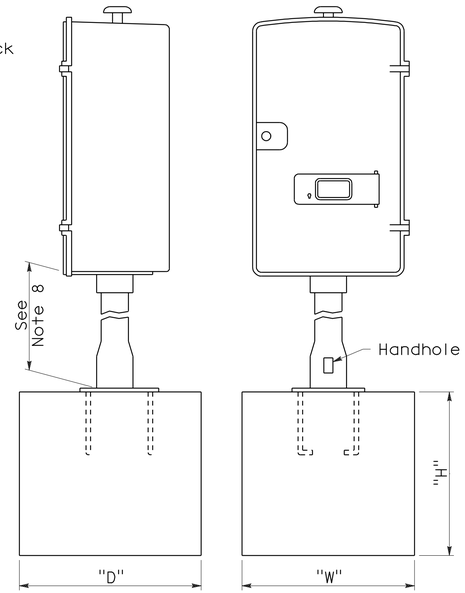

FOUNDATION FOR TYPE G CABINET

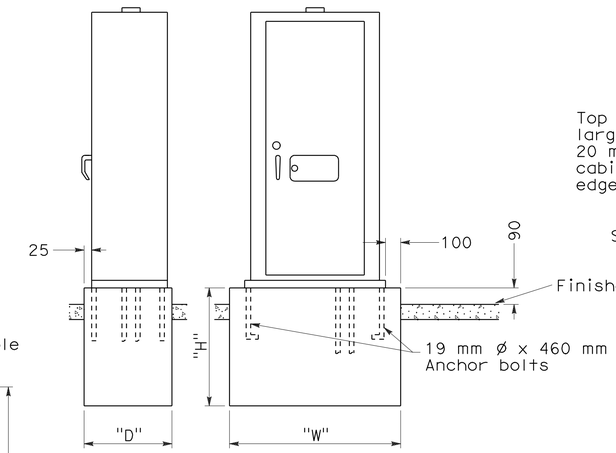

FOUNDATION FOR TYPE P, R AND S CABINETS

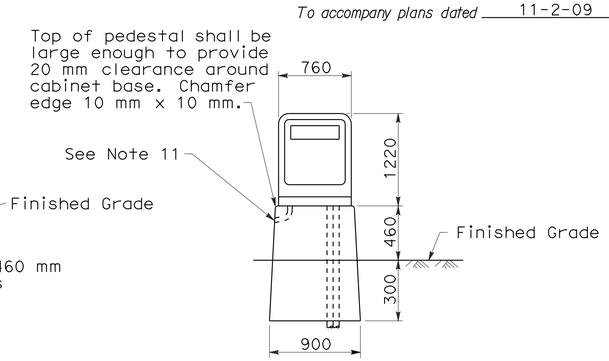

PEDESTAL FOUNDATION FOR TYPE M OR MODEL 336 CABINET

CABINET	FOUNDATION		
TYPE/ MODEL	H (mm)	W (mm)	D (mm)
G	900	600	600
M 336	760	900	560
P	460	1330	710
R	460	1330	710
S	460	1820	710

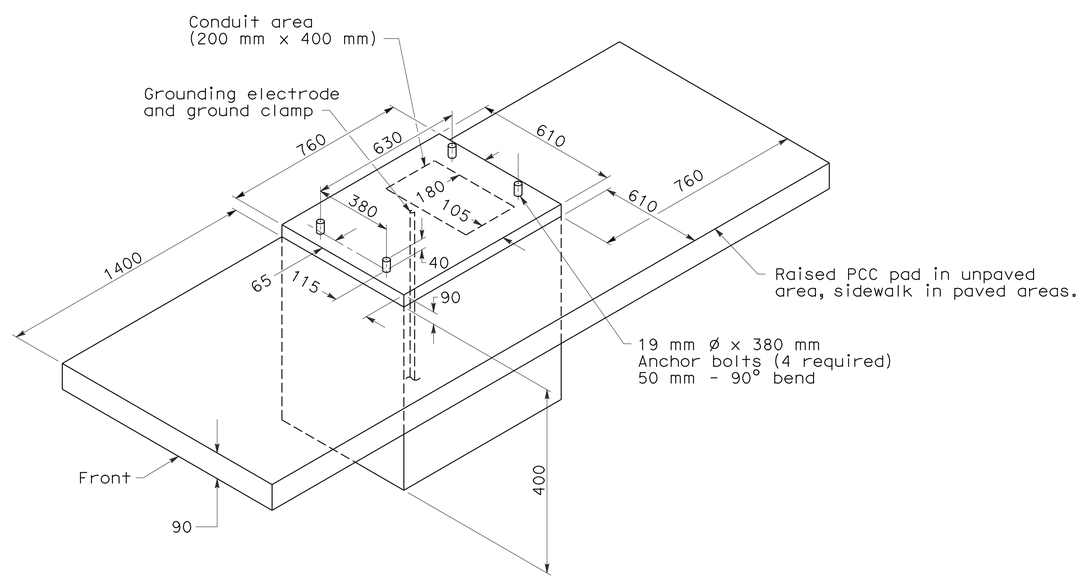

FOUNDATION DETAILS
For Model 332 and 334 cabinets

STATE OF CALIFORNIA
DEPARTMENT OF TRANSPORTATION

ELECTRICAL SYSTEMS (CONTROLLER CABINET DETAILS)

NO SCALE

ALL DIMENSIONS ARE IN MILLIMETERS UNLESS OTHERWISE SHOWN

RSP ES-3C DATED OCTOBER 5, 2007 SUPERSEDES STANDARD PLAN ES-3C DATED JULY 1, 2004-PAGE 425 OF THE STANDARD PLANS BOOK DATED JULY 2004.

REVISED STANDARD PLAN RSP ES-3C

2004 REVISED Std PLAN RSP ES-3C

6-27-07

DIST	COUNTY	ROUTE	KILOMETER POST TOTAL PROJECT	SHEET NO.	TOTAL SHEETS
02	Plu	70	56.5/57.2	80	149

Caltrans Metric

Jeffery G. McRae
REGISTERED ELECTRICAL ENGINEER

June 6, 2008
PLANS APPROVAL DATE

REGISTERED PROFESSIONAL ENGINEER Jeffery G. McRae No. E14512 Exp. 6-30-10 ELECTRICAL STATE OF CALIFORNIA

The State of California or its officers or agents shall not be responsible for the accuracy or completeness of electronic copies of this plan sheet.

To get to the Caltrans web site, go to: http://www.dot.ca.gov

To accompany plans dated 11-2-09

VISORS

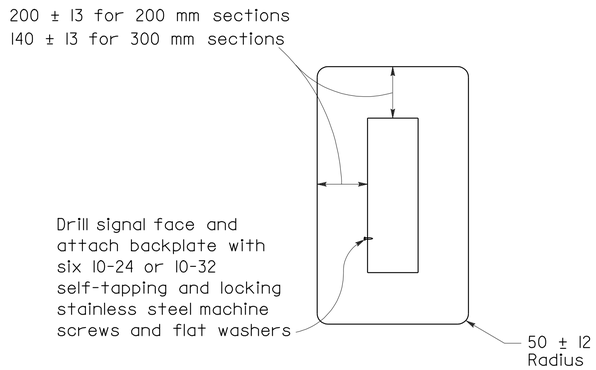

200 mm AND 300 mm SECTIONS

BACKPLATE

1.5 mm minimum thickness 3001-14 aluminum, or plastic when specified

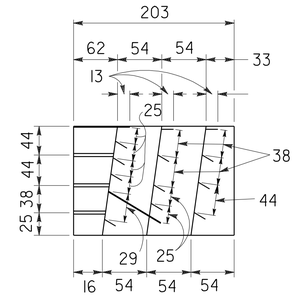

SECTION A-A

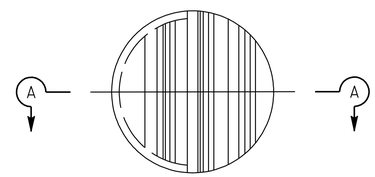

FRONT VIEW

DIRECTIONAL LOUVER

Directional louvers shall be oriented as directed by the Engineer and secured in place with one plated brass machine screw and nut.

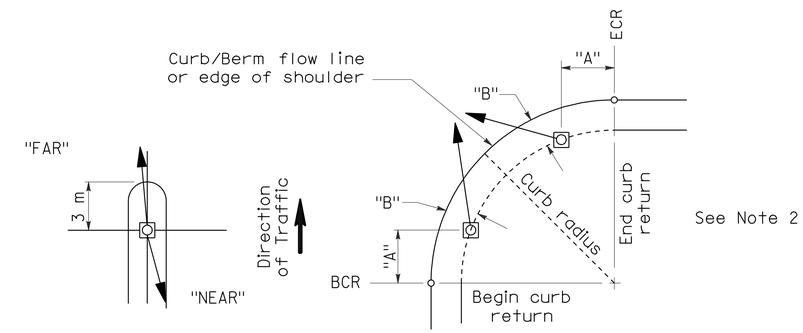

NOTES:

1. Typical signal pole placement unless dimensioned on plans.
2. For "A" and "B" dimensions, see Pole Schedule, or as directed by the Engineer.

SIGNAL STANDARD PLACEMENT DIMENSIONS AND EQUIPMENT LOCATIONS

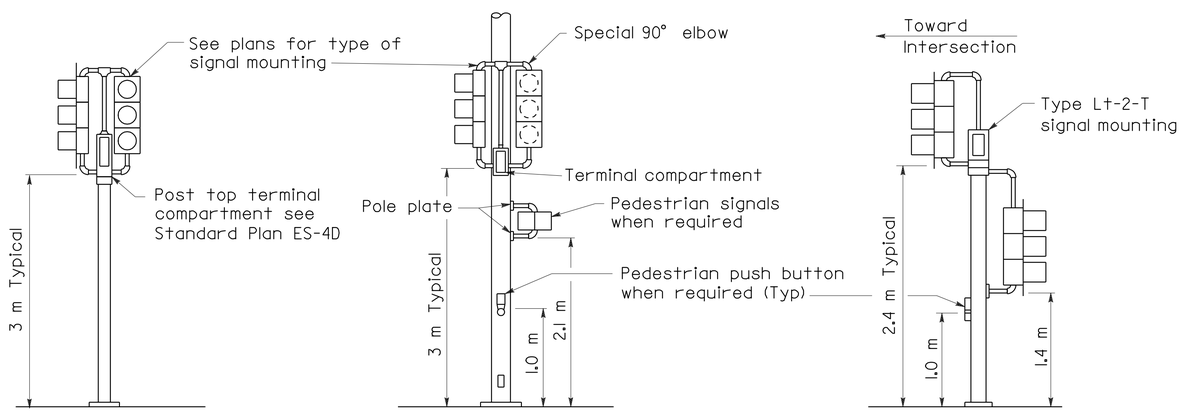

TOP MOUNTED SIGNALS (TV)

Type 1-A, 1-B, 1-C and 1-D standard as indicated on the plans

SIDE MOUNTED SIGNALS (SV AND SP)

Normally used on standards with luminaire or signal mast arm

LEFT TURN LANE SIGNAL

Type 1-A, 1-B, 1-C and 1-D standard as indicated on plans

TYPICAL SIGNAL INSTALLATIONS

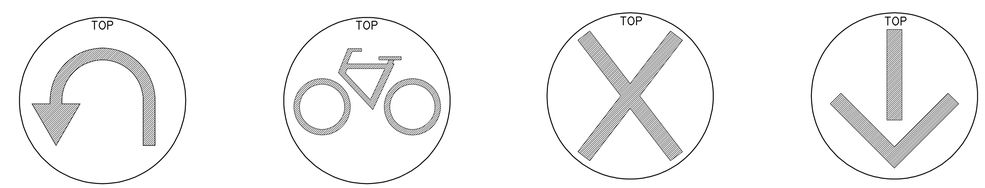

U-TURN SIGNAL FACE

BICYCLE SIGNAL FACE

LANE CONTROL SIGNAL FACE

LANE CONTROL SIGNAL FACE

STATE OF CALIFORNIA
DEPARTMENT OF TRANSPORTATION

ELECTRICAL SYSTEMS (SIGNAL HEADS AND MOUNTINGS)

NO SCALE

ALL DIMENSIONS ARE IN MILLIMETERS UNLESS OTHERWISE SHOWN

RSP ES-4C DATED JUNE 6, 2008 SUPERSEDES STANDARD PLAN ES-4C DATED July 1, 2004 - PAGE 433 OF THE STANDARD PLANS BOOK DATED July 2004.

REVISED STANDARD PLAN RSP ES-4C

2004 REVISED Std PLAN RSP ES-4C

5-19-08

DIST	COUNTY	ROUTE	KILOMETER POST TOTAL PROJECT	SHEET NO.	TOTAL SHEETS
02	Plu	70	56.5/57.2	81	149

Caltrans Metric

Jeffery G. McRae
REGISTERED ELECTRICAL ENGINEER

June 6, 2008
PLANS APPROVAL DATE

REGISTERED PROFESSIONAL ENGINEER Jeffery G. McRae No. E14512 Exp. 6-30-10 ELECTRICAL STATE OF CALIFORNIA

The State of California or its officers or agents shall not be responsible for the accuracy or completeness of electronic copies of this plan sheet.

To get to the Caltrans web site, go to: http://www.dot.ca.gov

To accompany plans dated 11-2-09

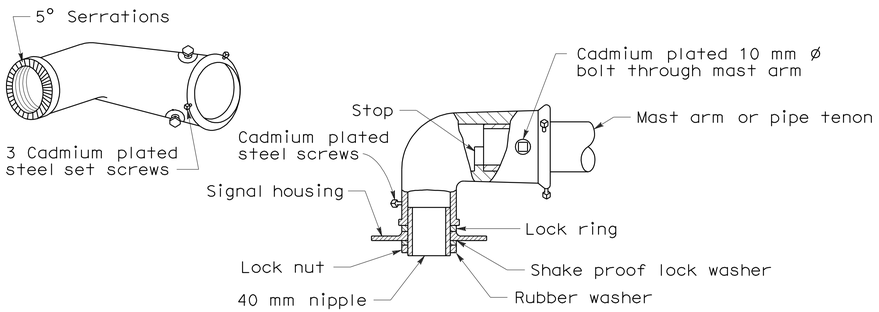

MAST ARM MOUNTING - TYPE "MAT"

For 2 NPS pipe, see Note 1.

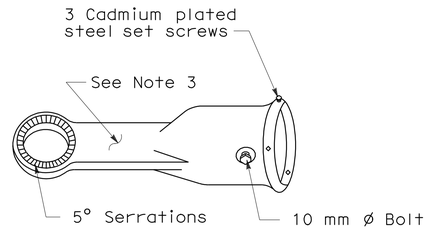

MAST ARM MOUNTING - TYPE "MAS"

For 2 NPS pipe. See Note 1.

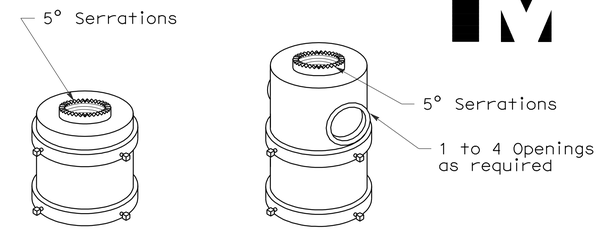

For one mounting For mulitiple mountings

TOP MOUNTINGS

For 4 NPS pipe, see Note 2.

SIGNAL SLIP FITTERS

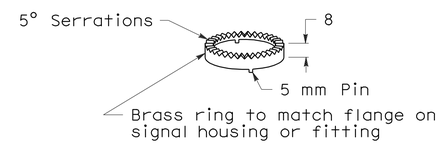

LOCK RING

Use where locking ring is not integral with signal housing or fitting.

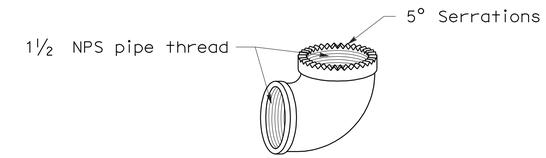

SPECIAL 90° ELBOW

One for each signal head, except those with special slip fitter mounting

MISCELLANEOUS MOUNTING HARDWARE

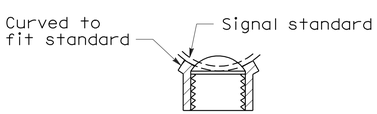

SECTION A-A

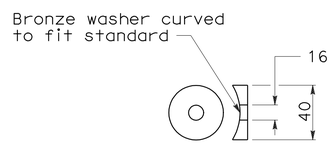

WASHER DETAIL "C"

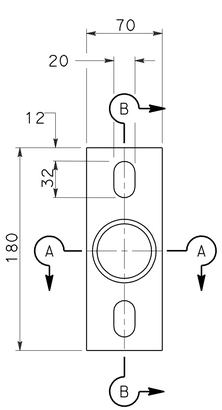

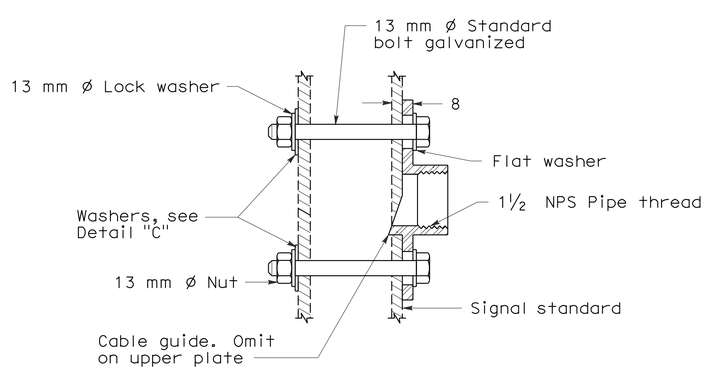

SECTION B-B

POLE PLATE

For side mountings

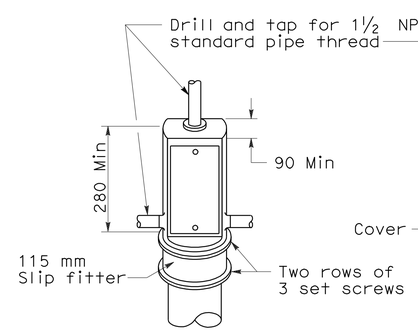

TOP MOUNTING

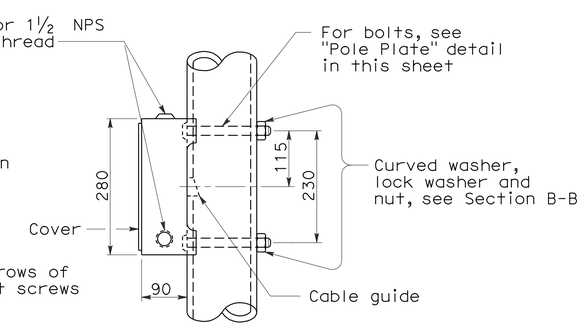

SIDE MOUNTING

TERMINAL COMPARTMENTS

NOTES

1. After mast arm signal has been plumbed and secured, drill 11 mm hole through mast arm tenon in line with slip fitter hole. Place a cadmium plated 10 mm ø galvanized bolt with washer under bolt head through hole and secure with washer, nut, and locknut. Seal openings between mast arm mountings and mast arm with mastic.
2. (a) Threaded top mounted slip fitter openings shall be 1½ NPS.
   (b) Serrations in fittings shall match those on bottom of signal heads or in lock ring.
   (c) Top opening shall be offset when backplate is used.
3. Wireway shall have a cross section area of 600 mm^2 minimum. Minimum width of 13 mm.

STATE OF CALIFORNIA
DEPARTMENT OF TRANSPORTATION

ELECTRICAL SYSTEMS (SIGNAL HEADS AND MOUNTINGS)

NO SCALE

ALL DIMENSIONS ARE IN MILLIMETERS UNLESS OTHERWISE SHOWN

RSP ES-4D DATED JUNE 6, 2008 SUPERSEDES STANDARD PLAN ES-4D DATED July 1, 2004 - PAGE 434 OF THE STANDARD PLANS BOOK DATED July 2004.

REVISED STANDARD PLAN RSP ES-4D

2004 REVISED Std PLAN RSP ES-4D

5-20-08

DIST	COUNTY	ROUTE	KILOMETER POST TOTAL PROJECT	SHEET NO.	TOTAL SHEETS
02	Plu	70	56.5/57.2	82	149

REGISTERED ELECTRICAL ENGINEER

October 5, 2007
PLANS APPROVAL DATE

REGISTERED PROFESSIONAL ENGINEER Jeffery G. McRae No. E14512 Exp. 6-30-08 ELECTRICAL STATE OF CALIFORNIA

The State of California or its officers or agents shall not be responsible for the accuracy or completeness of electronic copies of this plan sheet.

To get to the Caltrans web site, go to: http://www.dot.ca.gov

To accompany plans dated 11-2-09

LOOP INSTALLATION PROCEDURE

1. Loops shall be centered in lanes.
2. Saw slots in pavement for loop conductors as shown in details.
3. Distance between side of loop and a lead-in saw cut from adjacent detectors shall be 600 mm minimum. Distance between lead-in saw cuts shall be 150 mm minimum.
4. Bottom of saw slot shall be smooth with no sharp edges.
5. Slots shall be washed until clean, blown out and thoroughly dried before installing loop conductors.
6. Adjacent loops on the same sensor unit channel shall be wound in opposite directions.
7. Identify and tag loop circuit pairs in the pull box with loop number, start (S) and finish (F) of conductor. Identify and tag lead-in-cable with sensor number and phase.
8. Install loop conductor in slot using a 5 mm to 6 mm thick wood paddle. Hold loop conductors with wood paddles (at the bottom of the sawed slot) during sealant placement.
9. No more than 2 twisted pairs shall be installed in one sawed slot.
10. Allow additional 1.5 m of slack length of conductor for the lead-in run to pull box.
11. The additional length of each conductor for each loop shall be twisted together into a pair (6 turns per meter minimum) before being placed in the slot and conduit leading to pull box.
12. Test each loop circuit for continuity, circuit resistance and insulation resistance at the pull box before filling slots.
13. Fill slots as shown in details.
14. Splice loop conductors to lead-in cable. Splices shall be soldered.
15. End of lead-in-cable and Type 2 loop conductor shall be waterproofed prior to installing in conduit to prevent moisture from entering the cable.
16. Lead-in-cable shall not be spliced between the pull box and the controller cabinet terminals.
17. Test each loop circuit for continuity, circuit resistance and insulation resistance at the controller cabinet location.
18. Where loop conductors are not to be spliced to a lead-in-cable, the ends of the conductors shall be taped and waterproofed with electrical insulating coating.

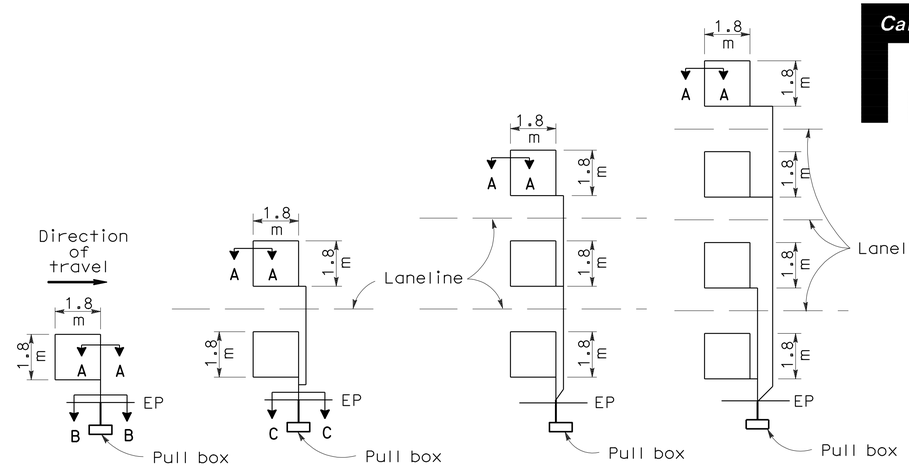

TYPE 1A INSTALLATION | TYPE 2A INSTALLATION | TYPE 3A INSTALLATION | TYPE 4A INSTALLATION

SAWCUT DETAILS

(Type A loop detector configurations illustrated)

1. 1A thru 4A = 1 Type A loop configuration in each lane.
2. 1B thru 4B = 1 Type B loop configuration in each lane.
3. 1C = 1 Type C loop configuration entering lanes as required.
4. 1D thru 4D = 1 Type D loop configuration in each lane.
5. 1E thru 4E = 1 Type E loop configuration in each lane.
6. 1Q thru 4Q = 1 Type Q loop configuration in each lane.
   (Use Type A, B, C, D, E or Q loop detector configurations only when specified or shown on plans)

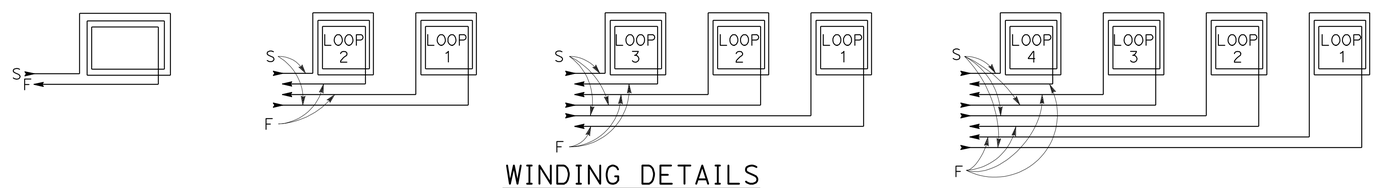

WINDING DETAILS

See Notes 6 and 7

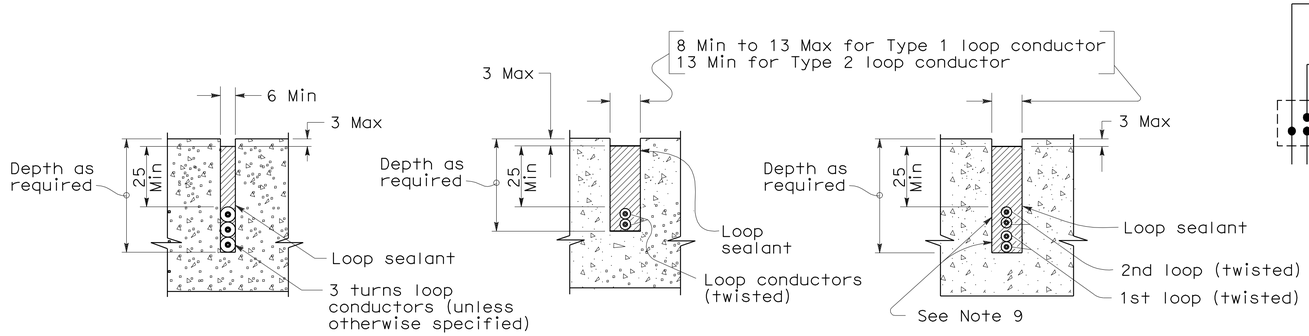

SECTION A-A | SECTION B-B | SECTION C-C

SLOT DETAILS - TYPE 1 AND TYPE 2 LOOP CONDUCTOR

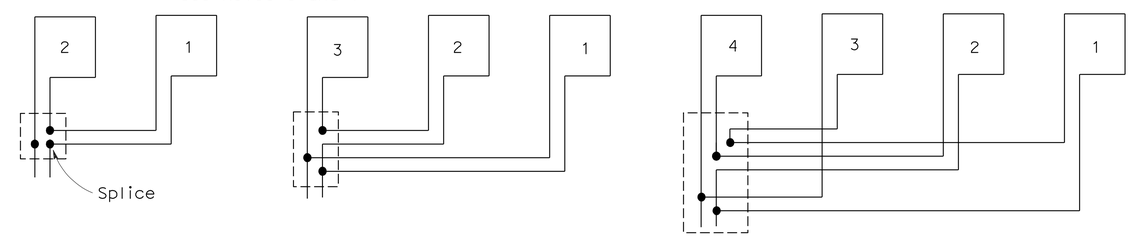

TYPICAL LOOP CONNECTIONS

(Dashed lines represent the pull box)

STATE OF CALIFORNIA
DEPARTMENT OF TRANSPORTATION

ELECTRICAL SYSTEMS (DETECTORS)

NO SCALE

ALL DIMENSIONS ARE IN MILLIMETERS UNLESS OTHERWISE SHOWN

RSP ES-5A DATED OCTOBER 5, 2007 SUPERSEDES STANDARD PLAN ES-5A DATED JULY 1, 2004-PAGE 436 OF THE STANDARD PLANS BOOK DATED JULY 2004.

REVISED STANDARD PLAN RSP ES-5A

2004 REVISED Std PLAN RSP ES-5A

8-9-07

DIST	COUNTY	ROUTE	KILOMETER POST TOTAL PROJECT	SHEET NO.	TOTAL SHEETS
02	Plu	70	56.5/57.2	83	149

Caltrans Metric

Jeffery G. McRae
REGISTERED ELECTRICAL ENGINEER

October 5, 2007
PLANS APPROVAL DATE

REGISTERED PROFESSIONAL ENGINEER Jeffery G. McRae No. E14512 Exp. 6-30-08 ELECTRICAL STATE OF CALIFORNIA

The State of California or its officers or agents shall not be responsible for the accuracy or completeness of electronic copies of this plan sheet.

To get to the Caltrans web site, go to: http://www.dot.ca.gov

To accompany plans dated 11-2-09

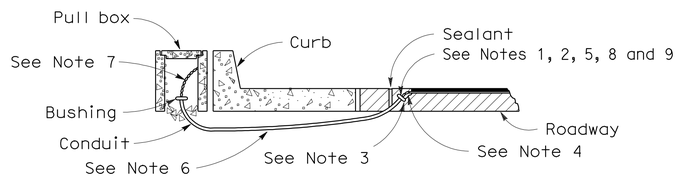

TYPE A
CURB TERMINATION DETAIL

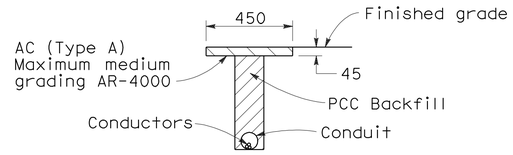

"T" TRENCH DETAIL

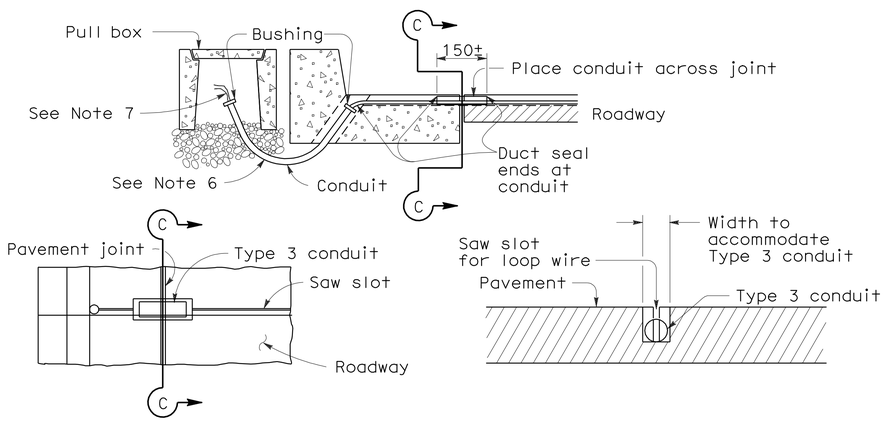

PLAN VIEW

SECTION C-C

TYPE B
CURB TERMINATION DETAILS

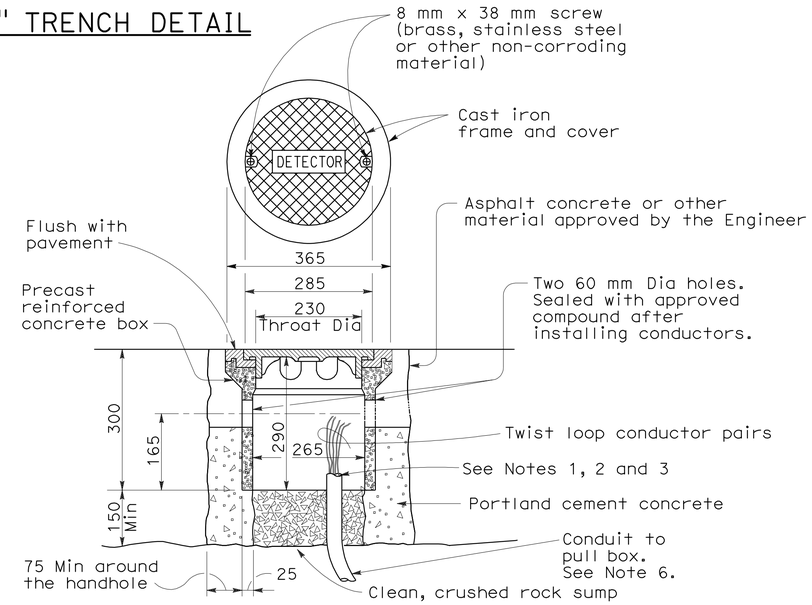

DETECTOR HANDHOLE DETAILS

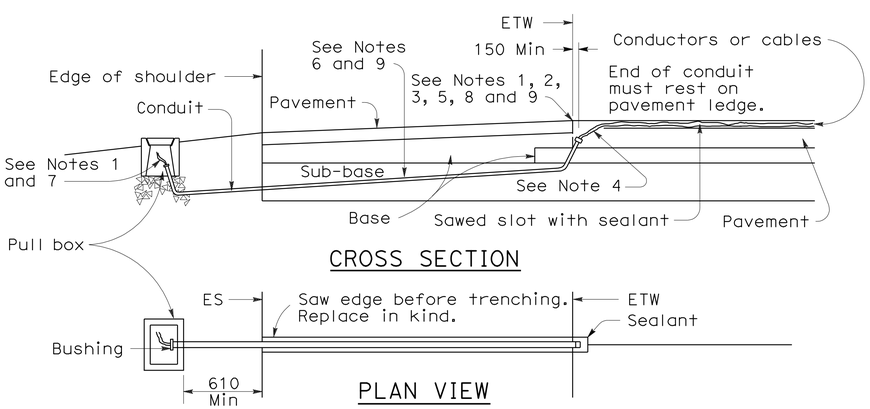

CROSS SECTION

PLAN VIEW

SHOULDER TERMINATION DETAILS

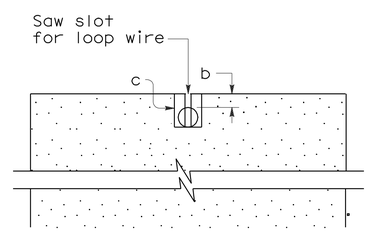

SECTION A-A

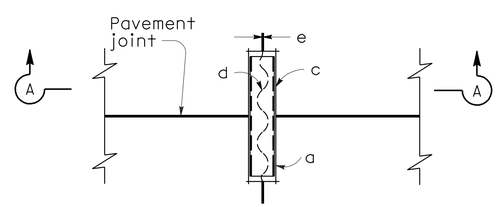

PLAN VIEW

TYPICAL LOOP LEAD-IN DETAILS
AT PAVEMENT JOINT

NOTES (This sheet only):

1. Bushing shall be used at end of conduit.
2. Tape detector conductors or cables 75 mm each side of bushings.
3. Install duct seal compound to each end of termination conduit before installing sealant.
4. Round all sharp edges where detector conductors or cables have to pass.
5. End of conduit shall be 80 mm below roadway surface.
6. Conduit size / Loop Conductors
   - 27C Minimum — 1 to 2 pairs
   - 41C Minimum — 3 to 4 pairs
   - 53C Minimum — 5 or more pairs
7. Splice detector conductors or cables to lead-in-cable run to controller cabinet.
8. Location of detector handhole when shown on plans.
9. When the shoulder and traveled way are paved with the same material and there is no joint between them, the conduit shall extend only 600 mm into the shoulder pavement.

NOTES:

a. 21C, Type 3 conduit 150 mm long minimum, plug both ends with caulking compound to keep out sealant.
b. 13 mm minimum between top of conduit and pavement surface.
c. Saw cut shall not exceed 25 mm in width and 3 mm longer than conduit to be installed.
d. Conductors with 13 mm minimum slack inside conduit.
e. Inductive loop detector saw slot.

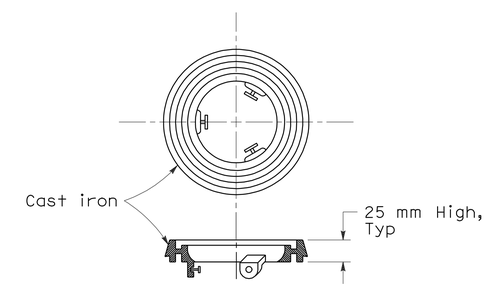

NOTE:
Use for Type A detector handhole on pavement resurfacing only.

LOCKING GRADE RING

STATE OF CALIFORNIA
DEPARTMENT OF TRANSPORTATION

ELECTRICAL SYSTEMS (DETECTORS)

NO SCALE

ALL DIMENSIONS ARE IN
MILLIMETERS UNLESS OTHERWISE SHOWN

RSP ES-5D DATED OCTOBER 5, 2007 SUPERSEDES STANDARD PLAN ES-5D
DATED JULY 1, 2004-PAGE 439 OF THE STANDARD PLANS BOOK DATED JULY 2004.

REVISED STANDARD PLAN RSP ES-5D

2004 REVISED Std PLAN RSP ES-5D

10-1-07

DIST	COUNTY	ROUTE	KILOMETER POST TOTAL PROJECT	SHEET NO.	TOTAL SHEETS
02	Plu	70	56.5/57.2	84	149

REGISTERED ELECTRICAL ENGINEER

October 5, 2007
PLANS APPROVAL DATE

REGISTERED PROFESSIONAL ENGINEER Jeffery G. McRae No. E14512 Exp. 6-30-08 ELECTRICAL STATE OF CALIFORNIA

The State of California or its officers or agents shall not be responsible for the accuracy or completeness of electronic copies of this plan sheet.

To get to the Caltrans web site, go to: http://www.dot.ca.gov

To accompany plans dated 11-2-09

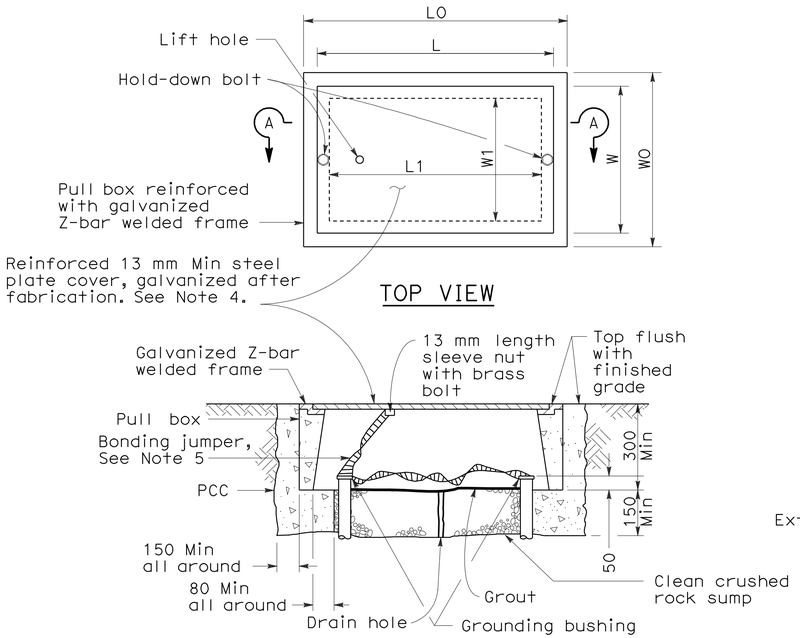

SECTION A-A

No. 3½(T), No. 5(T) AND No. 6(T) TRAFFIC PULL BOX

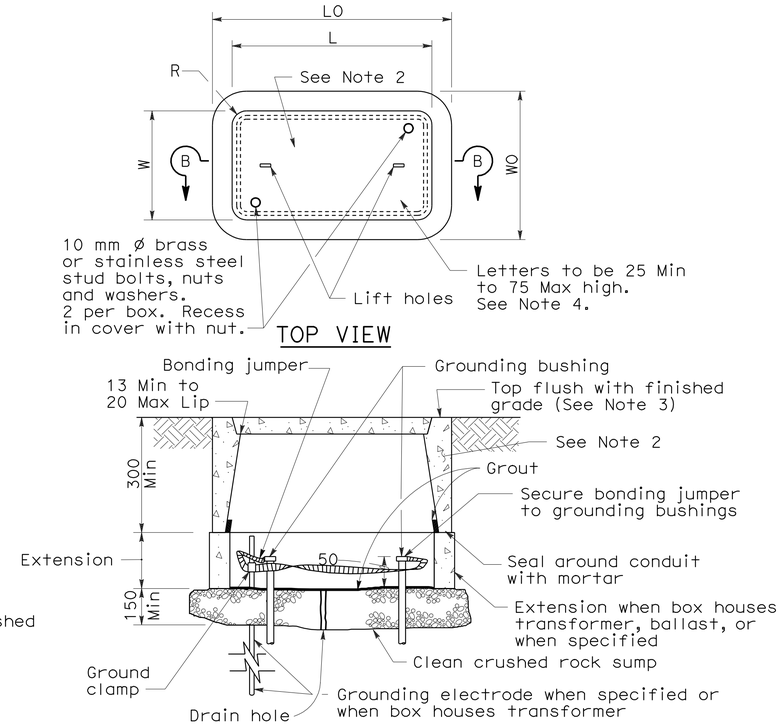

SECTION B-B

INSTALLATION DETAILS

DIMENSION TABLE

PULL BOX	CONCRETE BOX				NON-PCC BOX		CONCRETE OR NON-PCC COVERS				
	Minimum * Thickness	Minimum Depth Box and Extension	LO (mm)	WO (mm)	Minimum ** Thickness	Minimum Depth Box and Extension	L ** (mm)	W ** (mm)	R (mm)	Edge Thickness	Edge Taper
No. 3½	25 mm	No Extension	457	330	8 mm	No Extension	390	260	27	45 mm	3 mm
No. 5	25 mm	560 mm	666	425	8 mm	510 mm	590	350	32	50 mm	3 mm
No. 6	40 mm	610 mm	854	524	10 mm	510 mm	775	444	32	50 mm	3 mm

* Excluding conduit web ** Top dimension

DIMENSION TABLE

PULL BOX	CONCRETE BOX						NON-PCC BOX		CONCRETE OR NON-PCC COVERS				
	Minimum * Thickness	Minimum Depth Box and Extension	LO (mm)	WO (mm)	L1 (mm)	W1 (mm)	Minimum ** Thickness	Minimum Depth Box and Extension	L ** (mm)	W ** (mm)	R (mm)	Edge Thickness	Edge Taper
No. 3½(T)	40 mm	305 mm	530 ±	430 ± 25	370 ±	270 ± 25	Does Not Apply		510 ±	350 ±	0	13 mm	None
No. 5(T)	45 mm	305 mm	750 ±	600 ± 25	480 ±	330 ± 25	Does Not Apply		690 ±	410 ±	0	13 mm	None
No. 6(T)	50 mm	305 mm	900 ±	760 ± 25	600 ±	430 ± 25	Does Not Apply		840 ±	510 ±	0	13 mm	None

* Excluding conduit web ** Top dimension

NOTES ON PULL BOXES:

1. Traffic pull box shall be provided with steel cover and special concrete footing. Steel cover shall have embossed non-skid pattern.

2. Steel reinforcing shall be as regularly used in the standard products of the respective manufacturer.

3. Top of pull boxes shall be flush with surrounding grade or top of adjacent curb, except that in unpaved areas where pull box is not immediately adjacent to and protected by a concrete foundation, pole or other protective construction, the box shall be placed with its top 30 mm above surrounding grade. Where practicable, pull boxes shown in the vicinity of curbs shall be placed adjacent to the back of curb, and pull boxes shown adjacent to standards shall be placed on side of foundation facing away from traffic, unless otherwise noted. When pull box is installed in sidewalk area, the depth of the pull box shall be adjusted so that the top of the pull box is flush with the sidewalk.

4. Pull box covers shall be marked as follows: "SERVICE" Service circuits between service point and service disconnect; "SPRINKLER-CONTROL" Sprinkler control circuits, 50 V or less; "CALTRANS" On all pull boxes, except pull boxes marked "SPRINKLER-CONTROL"; and "TELEPHONE" Telephone service.

   a) No. 3½ pull box.

      1) "SIGNAL" Traffic signal circuits with or without street or sign lighting circuits.

      2) "ST LIGHTING" Street or sign lighting circuits where voltage is under 600 V.

   b) No. 5, 6, 9 or 9A pull box.

      1) "TRAFFIC SIGNAL" Traffic signal circuits with or without street or sign lighting circuits.

      2) "STREET LIGHTING" Street or sign lighting circuits where voltage is under 600 V.

      3) "STREET LIGHTING-HIGH VOLTAGE" Street or sign lighting circuits where voltage is above 600 V.

      4) "IRRIGATION" Circuits to irrigation controller 120 V or more.

      5) "RAMP METER" Ramp meter circuits.

      6) "COUNT STATION" Count or speed monitor circuits.

      7) "COMMUNICATION" Communication circuits.

      8) "TOS COMMUNICATIONS" TOS communications line.

      9) "TOS POWER" TOS power.

      10) "TDC POWER" Telephone demarcation cabinet power.

      11) "CCTV" Closed circuit television circuits.

      12) "TMS" Traffic monitoring station circuits.

      13) "CMS" Changeable message sign circuits.

      14) "HAR" Highway advisory radio circuits.

5. Bonding jumper for metal covers shall be 1 m long, minimum.

6. The nominal dimensions of the opening in which the cover sets shall be the same as the cover dimensions except the length and width dimensions shall be 3 mm greater.

7. Covers and boxes shall be interchangeable with California standard male and female gages. When interchanged with a standard male or female gage, the top surfaces shall be flush within 3 mm. Top outside edge of concrete covers and pull boxes shall have a 6 mm minimum radius.

8. Pull box shall not be installed within the boundaries of new or existing curb ramps.

9. Pull boxes for electroliers, post and signal standards shall be located ± 1.5 m from the station of the adjacent electrolier, post or signal standard. Pull boxes shall be placed adjacent to back of curb or edge of shoulder except where this is impractical, a box may be placed in another suitable protected and accessible location.

STATE OF CALIFORNIA
DEPARTMENT OF TRANSPORTATION

ELECTRICAL SYSTEMS (PULL BOX DETAILS)

NO SCALE

ALL DIMENSIONS ARE IN MILLIMETERS UNLESS OTHERWISE SHOWN

RSP ES-8 DATED OCTOBER 5, 2007 SUPERSEDES STANDARD PLAN ES-8 DATED JULY 1, 2004-PAGE 467 OF THE STANDARD PLANS BOOK DATED JULY 2004.

REVISED STANDARD PLAN RSP ES-8

2004 REVISED Std PLAN RSP ES-8

7-3-07

DIST	COUNTY	ROUTE	KILOMETER POST TOTAL PROJECT	SHEET NO.	TOTAL SHEETS
02	Plu	70	56.5/57.2	85	149

Caltrans Metric

REGISTERED ELECTRICAL ENGINEER

October 5, 2007
PLANS APPROVAL DATE

REGISTERED PROFESSIONAL ENGINEER Jeffery G. McRae No. E14512 Exp. 6-30-08 ELECTRICAL STATE OF CALIFORNIA

The State of California or its officers or agents shall not be responsible for the accuracy or completeness of electronic copies of this plan sheet.

To get to the Caltrans web site, go to: http://www.dot.ca.gov

To accompany plans dated 11-2-09

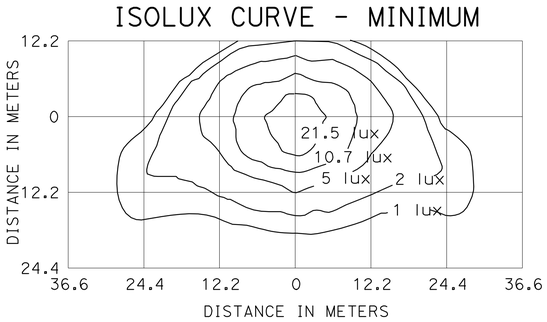

TYPE III MEDIUM CUTOFF

Cutoff Luminaire
10.4 m Mounting Height
LAMP OPERATED AT 22 000 lm
200 W HIGH PRESSURE SODIUM LAMP
ANSI DESIGNATION S66

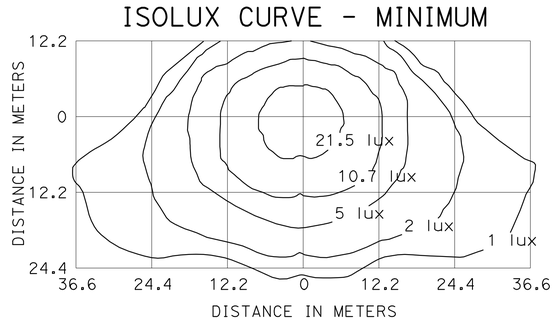

TYPE III MEDIUM CUTOFF

Cutoff Luminaire
12.2 m Mounting Height
LAMP OPERATED AT 37 000 lm
310 W HIGH PRESSURE SODIUM LAMP
ANSI DESIGNATION S67

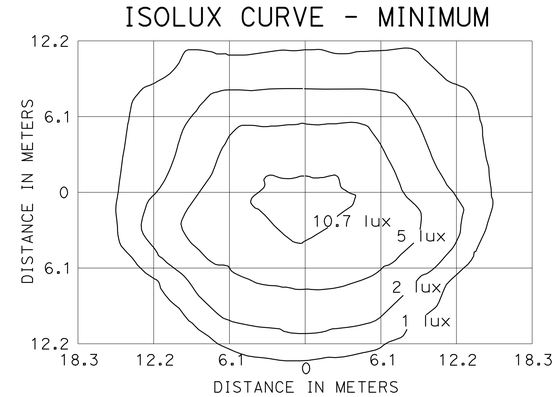

FLUSH SOFFIT LUMINAIRE

5.2 m Mounting Height
LAMP OPERATED AT 5800 lm
70 W HIGH PRESSURE SODIUM LAMP
ANSI DESIGNATION S62

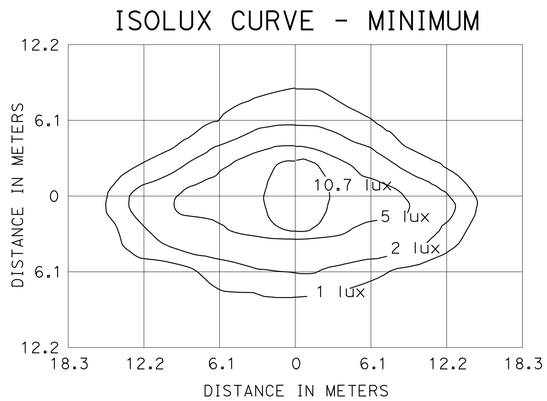

PENDANT SOFFIT LUMINAIRE
TYPE III SHORT

5.2 m Mounting Height
LAMP OPERATED AT 5800 lm
70 W HIGH PRESSURE SODIUM LAMP
ANSI DESIGNATION S62

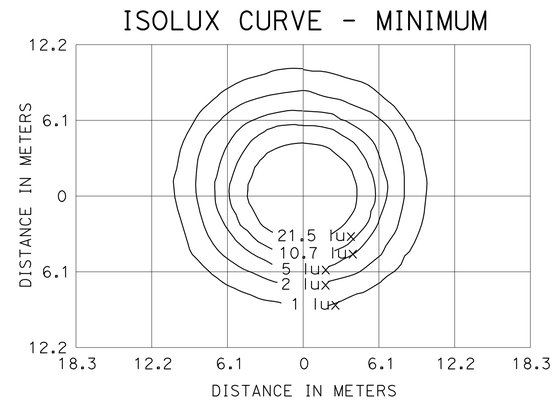

PENDANT SOFFIT LUMINAIRE

5.2 m Mounting Height
LAMP OPERATED AT 5800 lm
70 W HIGH PRESSURE SODIUM LAMP
ANSI DESIGNATION S62

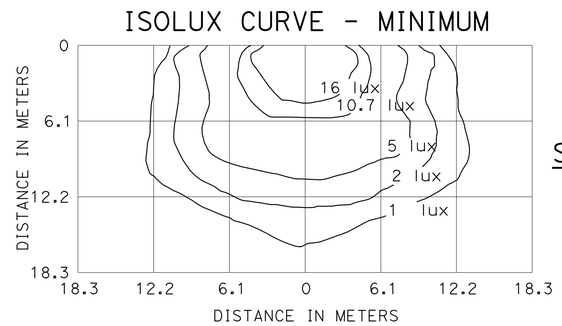

DETAIL ``W'' WALL LUMINAIRE

4.6 m Mounting Height
LAMP OPERATED AT 9500 lm
100 W HIGH PRESSURE SODIUM LAMP
ANSI DESIGNATION S54

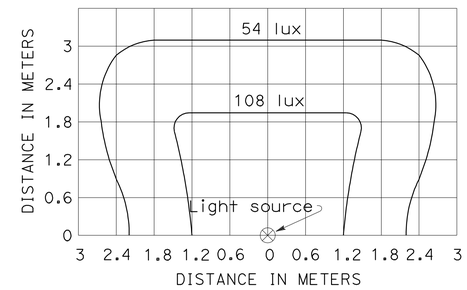

SIGN LIGHTING FIXTURE ISOLUX DIAGRAM

1. Curves represent the minimum lux of initial illumination on a 3 m x 6 m panel.
2. The lux shown are with the fixture attached to the light fixture mounting channel which places the center of the source 1420 mm in front of panel and 300 mm below the bottom edge.
3. Applicable lamp: 85-W fluorescent phosphor coated induction lamp.

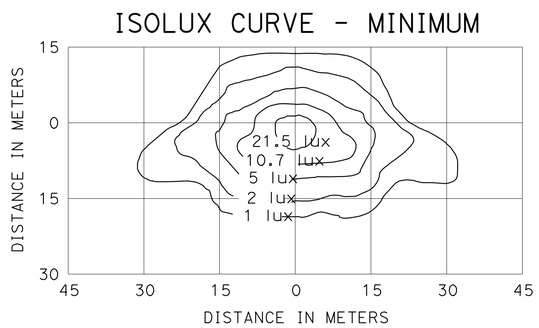

TYPE III MEDIUM CUTOFF

Cutoff Luminaire
9.1 m Mounting Height
LAMP OPERATED AT 16 000 lm
150 W HIGH PRESSURE SODIUM LAMP
ANSI DESIGNATION S55

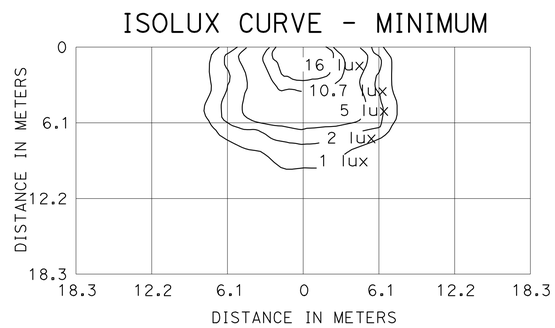

WALL LUMINAIRE

4.6 m Mounting Height
LAMP OPERATED AT 5800 lm
70 W HIGH PRESSURE SODIUM LAMP
ANSI DESIGNATION S62

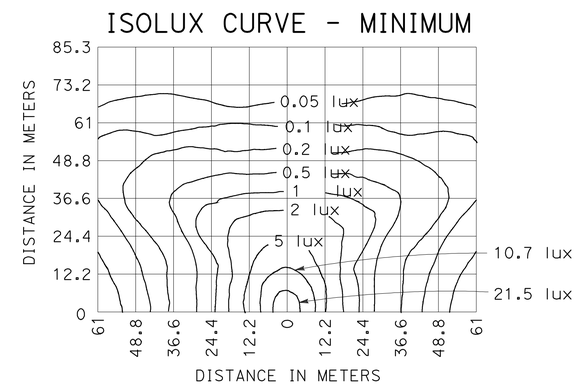

LOW PRESSURE SODIUM LUMINAIRE

12.2 m Mounting Height
LAMP OPERATED AT 33 000 lm
180 W LOW PRESSURE SODIUM LAMP

NOTE

Isolux diagrams show the minimum horizontal lux required.

STATE OF CALIFORNIA
DEPARTMENT OF TRANSPORTATION

ELECTRICAL SYSTEMS (ISOLUX DIAGRAMS)

NO SCALE

ALL DIMENSIONS ARE IN MILLIMETERS UNLESS OTHERWISE SHOWN

RSP ES-10 DATED OCTOBER 5, 2007 SUPERSEDES STANDARD PLAN ES-10 DATED JULY 1, 2004-PAGE 474 OF THE STANDARD PLANS BOOK DATED JULY 2004.

REVISED STANDARD PLAN RSP ES-10

2004 REVISED Std PLAN RSP ES-10

6-27-07

DIST	COUNTY	ROUTE	KILOMETER POST TOTAL PROJECT	SHEET NO.	TOTAL SHEETS
02	Plu	70	56.5/57.2	86	149

Caltrans Metric

REGISTERED ELECTRICAL ENGINEER

October 5, 2007
PLANS APPROVAL DATE

REGISTERED PROFESSIONAL ENGINEER
Jeffery G. McRae
No. E14512
Exp. 6-30-08
ELECTRICAL
STATE OF CALIFORNIA

The State of California or its officers or agents shall not be responsible for the accuracy or completeness of electronic copies of this plan sheet.

To get to the Caltrans web site, go to: http://www.dot.ca.gov

To accompany plans dated 11-2-09

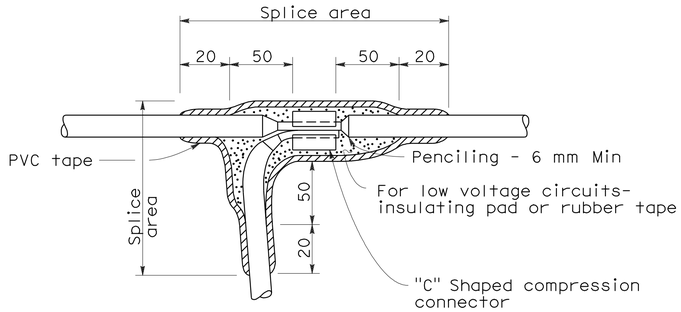

TYPE "C" SPLICE

Between 1 free-end and 1 through conductor

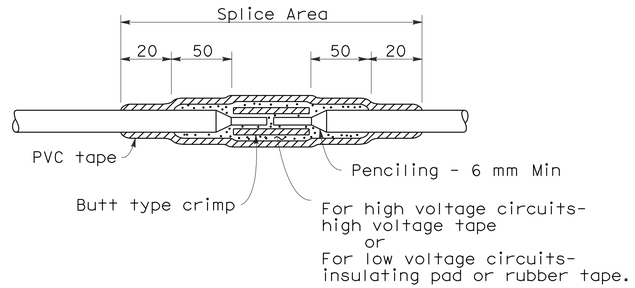

TYPE "S" SPLICE

Between 2 free-ends

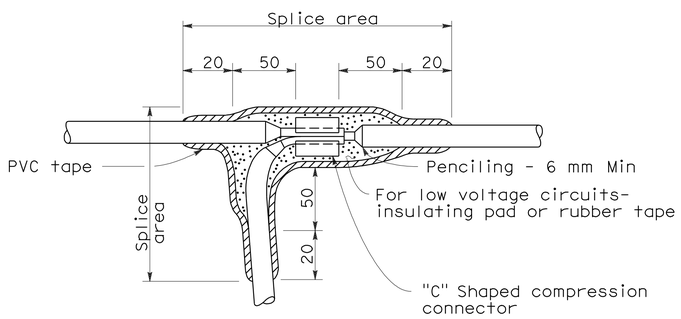

TYPE "T" SPLICE

For 3 free-ends

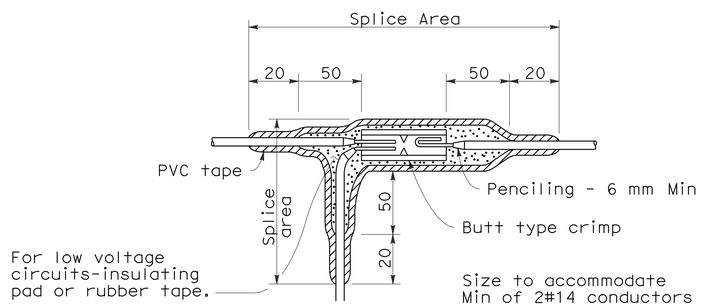

TYPE "ST" SPLICE

NOTES:

1. Dimensions are minimum.
2. Rubber tapes shall be rolled after application.

INSULATION METHODS

Low Voltage Circuits (0-600 V)

METHOD "B"

1. Completely cover the splice area with electrical insulating coating and allow to dry.
2. Apply 2 layers of electrical insulating pad with minimum thickness of 4 mm each layer or 2 layers, half lapped, synthetic oil resistant, self fusing rubber tape.
3. Apply 3 layers half lapped polyvinyl chloride tape.
4. Cover entire splice with electrical insulating coating and allow to dry.

High Voltage Circuits (Over 600 V)

1. Completely cover the splice area with electrical insulating coating and allow to dry.
2. Apply high voltage tape to a minimum thickness equal to original insulation.
3. Apply 3 layers half lapped polyvinyl chloride tape.
4. Cover entire splice with electrical insulating coating and allow to dry.

STATE OF CALIFORNIA
DEPARTMENT OF TRANSPORTATION

ELECTRICAL SYSTEMS (SPLICING DETAILS)

NO SCALE

ALL DIMENSIONS ARE IN MILLIMETERS UNLESS OTHERWISE SHOWN

RSP ES-13A DATED OCTOBER 5, 2007 SUPERSEDES STANDARD PLAN ES-13A DATED JULY 1, 2004-PAGE 478 OF THE STANDARD PLANS BOOK DATED JULY 2004.

REVISED STANDARD PLAN RSP ES-13A

2004 REVISED Std PLAN RSP ES-13A

6-27-07

DIST	COUNTY	ROUTE	KILOMETER POST TOTAL PROJECT	SHEET NO.	TOTAL SHEETS
02	Plu	70	56.5/57.2	87	149

Caltrans Metric

REGISTERED ELECTRICAL ENGINEER

October 5, 2007
PLANS APPROVAL DATE

REGISTERED PROFESSIONAL ENGINEER Jeffery G. McRae No. E14512 Exp. 6-30-08 ELECTRICAL STATE OF CALIFORNIA

The State of California or its officers or agents shall not be responsible for the accuracy or completeness of electronic copies of this plan sheet.

To get to the Caltrans web site, go to: http://www.dot.ca.gov

To accompany plans dated 11-2-09

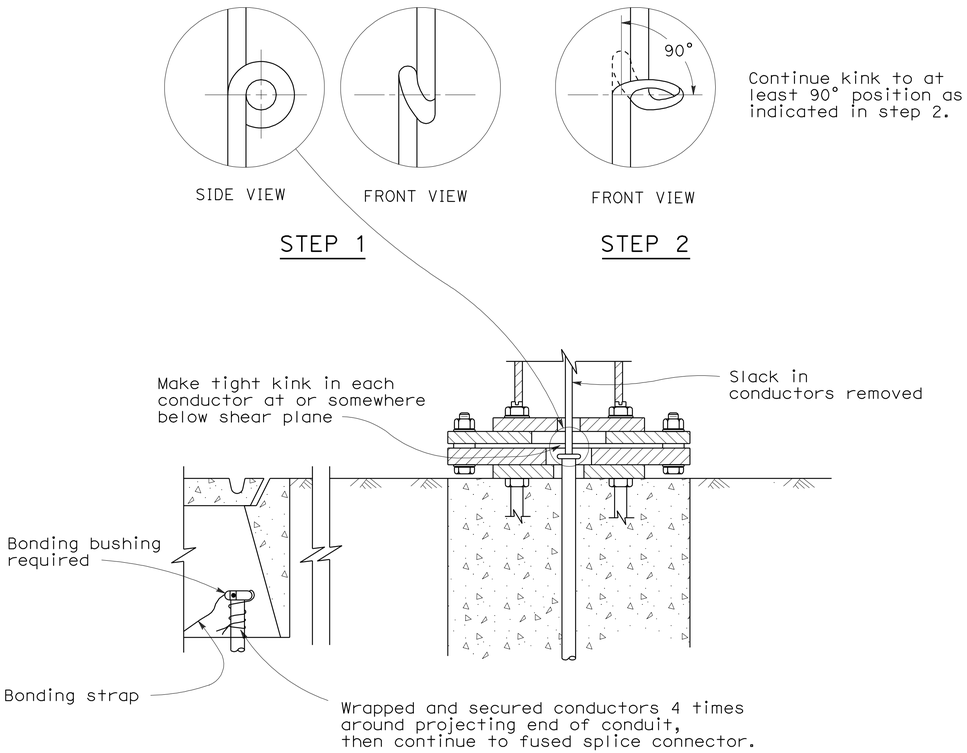

KINKING DETAIL FOR SLIP BASE STANDARDS

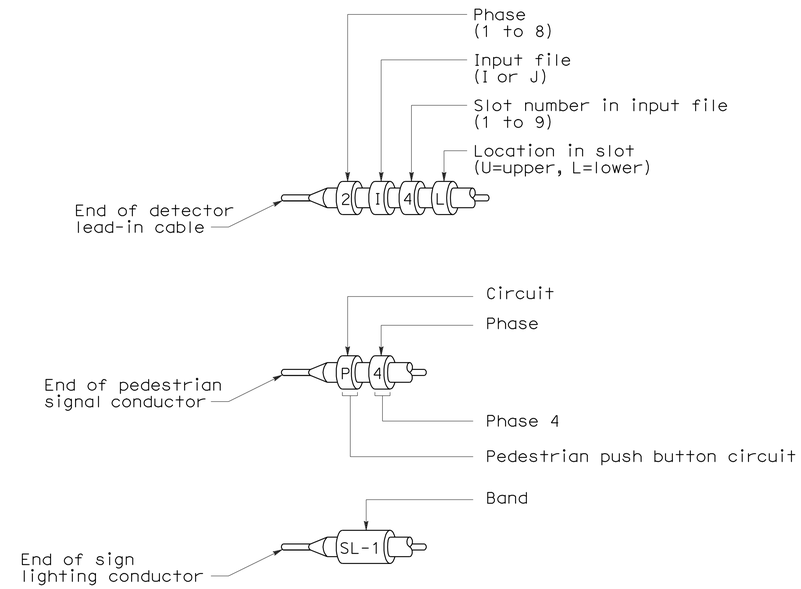

TYPICAL BANDING OF CONDUCTOR ENDS

Primary lines of multiple ballasts shall be provided with fused connectors.
Fuse ratings shall be as noted below.

CIRCUIT VOLTAGE	FUSE VOLTAGE RATING	FUSE CURRENT RATING																
		HPS LAMP BALLAST								LOW PRESSURE SODIUM BALLAST					INDUCTION SIGN LIGHTING	SINGLE PHASE (TWO WIRE) TRANSFORMERS (PRIMARY SIDE)		
		70 W	100 W	150 W	200 W	250 W	310 W	400 W	1000 W	35 W	55 W	90 W	135 W	180 W	85 W	1 kVA	2 kVA	3 kVA
120 V	250 V	5	5	5	5	5	5	5	-	5	5	5	5	5	5	10	20	30
240 V	250 V	5	5	5	5	5	5	5	5	3	3	3	5	5	5	6	10	20
480 V	500-600 V	5	5	5	5	5	5	5	5	2	2	2	3	3	1*	3	6	10

* See Revised Standard Plan RSP ES-15D, Type SC3 Control.

FUSE RATINGS FOR FUSED CONNECTORS

LUMINAIRE BALLAST FUSING

STATE OF CALIFORNIA
DEPARTMENT OF TRANSPORTATION

ELECTRICAL SYSTEMS (WIRING DETAILS AND FUSE RATINGS)

NO SCALE

ALL DIMENSIONS ARE IN MILLIMETERS UNLESS OTHERWISE SHOWN

RSP ES-13B DATED OCTOBER 5, 2007 SUPERSEDES STANDARD PLAN ES-13B DATED JULY 1, 2004-PAGE 479 OF THE STANDARD PLANS BOOK DATED JULY 2004.

REVISED STANDARD PLAN RSP ES-13B

2004 REVISED Std PLAN RSP ES-13B

10-1-07

DIST	COUNTY	ROUTE	KILOMETER POST TOTAL PROJECT	SHEET No	TOTAL SHEETS
02	Plu	70	56.5/57.2	88	149

Eric Watson 10/23/09
REGISTERED CIVIL ENGINEER DATE

11-2-09
PLANS APPROVAL DATE

REGISTERED PROFESSIONAL ENGINEER Eric Watson No. 64273 Exp. 6-30-11 CIVIL STATE OF CALIFORNIA

The State of California or its officers or agents shall not be responsible for the accuracy or completeness of electronic copies of this plan sheet.

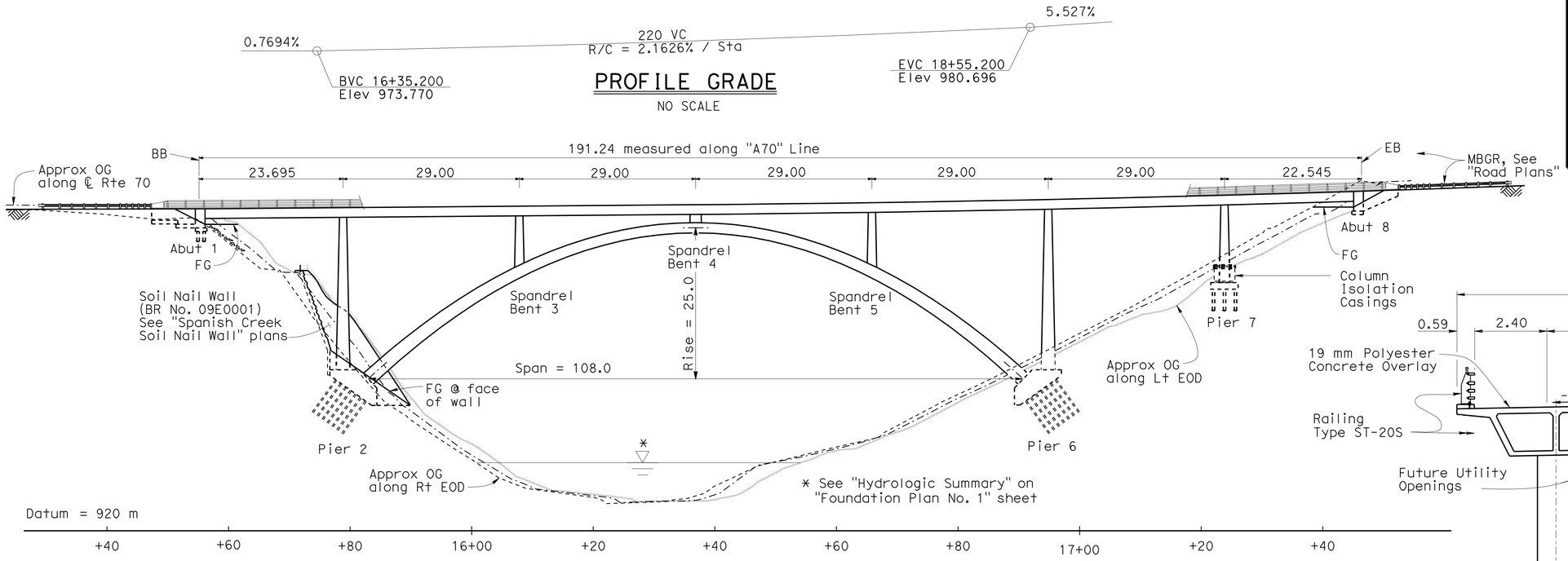

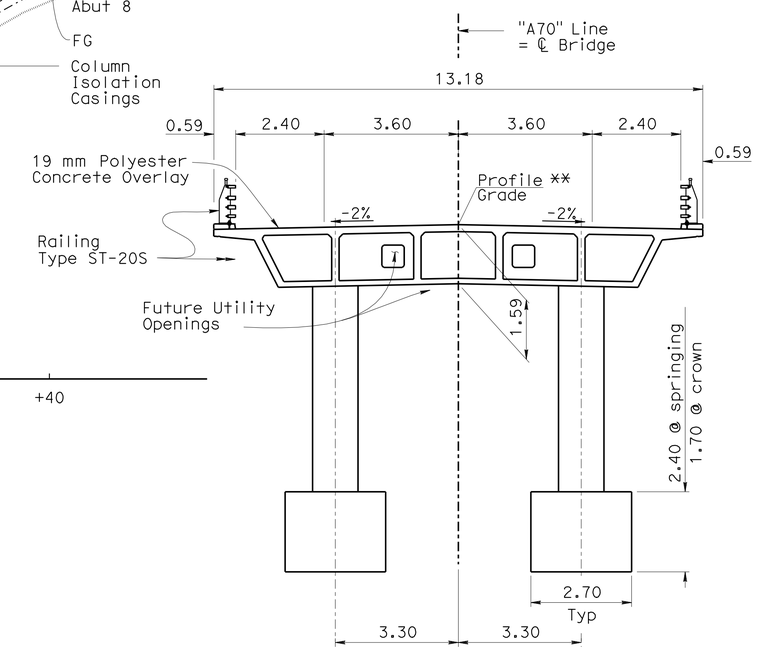

Legend:

① Paint "Spanish Creek Bridge" & "Br. No. 09-0077"

** Profile Grade elevation is at top of 19 mm polyester concrete overlay. Structure depth shown does not include the thickness of the overlay

-·-·-·- Indicates existing structure

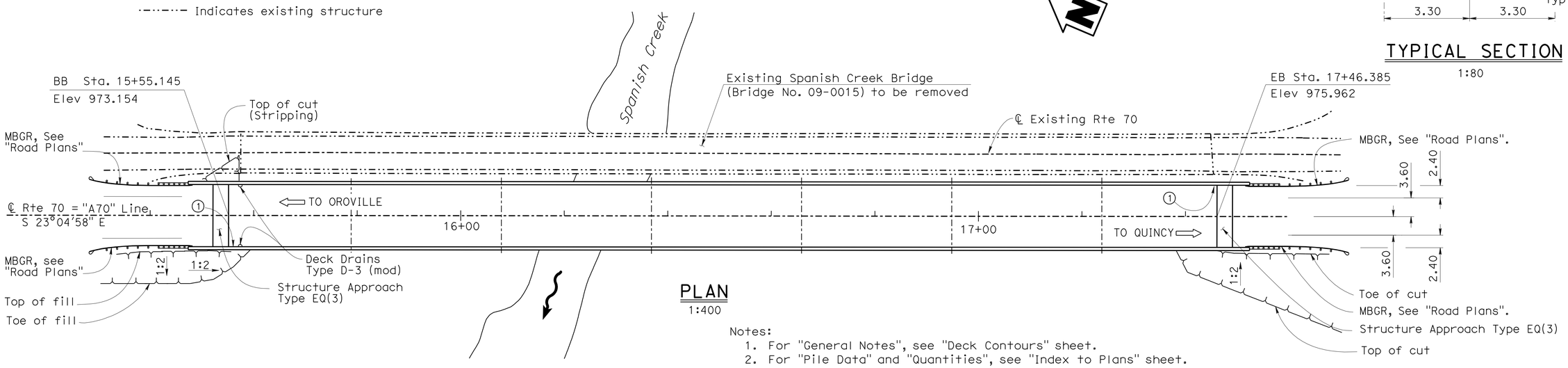

Notes:
1. For "General Notes", see "Deck Contours" sheet.
2. For "Pile Data" and "Quantities", see "Index to Plans" sheet.

Caltrans Metric										
Jeff Sims, DESIGN ENGINEER	DESIGN	BY Eric Watson	CHECKED Kevin Harper	LRFD	LIVE LOADING: HL93 AND ALTERNATIVE AND PERMIT DESIGN LOAD		STATE OF CALIFORNIA DEPARTMENT OF TRANSPORTATION	DIVISION OF ENGINEERING SERVICES STRUCTURE DESIGN	BRIDGE NO. 09-0077	SPANISH CREEK BRIDGE (REPLACE)
	DETAILS	BY Bob Huddleston	CHECKED Kevin Harper	LAYOUT	BY Eric Watson	CHECKED Kevin Harper		DESIGN BRANCH 1	KILOMETER POST 56.8	GENERAL PLAN
	QUANTITIES	BY Mark Simonsen	CHECKED Yihwin Huang	SPECIFICATIONS	BY Karla Meier	PLANS AND SPECS COMPARED Karla Meier				

ALL DIMENSIONS ARE IN METERS UNLESS OTHERWISE SHOWN

ORIGINAL SCALE IN MILLIMETERS FOR REDUCED PLANS 0 10 20 30 40 50 60 70 80 90 100

CU 02
EA 373101

DISREGARD PRINTS BEARING EARLIER REVISION DATES → 7/19/05 09/16/09 09/23/09 09/24/09 10/06/09 10/14/09 06/29/09 07/06/09 07/16/09

SHEET 1 OF 55

STRUCTURES DESIGN GENERAL PLAN SHEET (METRIC) (REV.03-17-04)

FILE => 09-0077-a-gp02.dgn

USERNAME => trmikest DATE PLOTTED => 10-NOV-2009 TIME PLOTTED => 07:21

DIST	COUNTY	ROUTE	KILOMETER POST TOTAL PROJECT	SHEET No	TOTAL SHEETS
02	Plu	70	56.5/57.2	89	149

Eric Watson 10/23/09
REGISTERED CIVIL ENGINEER DATE

11-2-09
PLANS APPROVAL DATE

REGISTERED PROFESSIONAL ENGINEER Eric Watson No. 64273 Exp. 6-30-11 CIVIL STATE OF CALIFORNIA

The State of California or its officers or agents shall not be responsible for the accuracy or completeness of electronic copies of this plan sheet.

INDEX TO PLANS

SHEET NO.	TITLE
1	GENERAL PLAN
2	INDEX TO PLANS
3	DECK CONTOURS
4	FOUNDATION PLAN NO. 1
5	FOUNDATION PLAN NO. 2
6	LIMITS OF PAYMENT
7	ABUTMENT 1 LAYOUT
8	ABUTMENT 8 LAYOUT
9	ABUTMENT DETAILS NO. 1
10	ABUTMENT DETAILS NO. 2
11	PIER 7 DETAILS
12	ISOLATION CASING DETAILS
13	ARCH FOOTING DETAILS NO. 1
14	ARCH FOOTING DETAILS NO. 2
15	MICROPILE DETAILS
16	MICROPILE TEST DETAILS NO. 1
17	MICROPILE TEST DETAILS NO. 2
18	PIER 2 & 6 DETAILS
19	ARCH RIB DETAILS NO. 1
20	ARCH RIB DETAILS NO. 2
21	SPANDREL BENT DETAILS
22	BENT DETAILS
23	TYPICAL SECTION
24	GIRDER LAYOUT
25	GIRDER REINFORCEMENT TOP
26	GIRDER REINFORCEMENT BOTTOM
27	DECK DRAIN DETAILS
28	CONSTRUCTION SEQUENCE
29	STRUCTURE APPROACH TYPE EQ(3)
30	RAILING TYPE ST-20S DETAILS NO. 1
31	RAILING TYPE ST-20S DETAILS NO. 2
32	RAILING TYPE ST-20S DETAILS NO. 3
33	RAILING TYPE ST-20S DETAILS NO. 4
34	JOINT SEAL ASSEMBLY (MAXIMUM MOVEMENT RATING = 100 MM)
35	LOG OF TEST BORINGS 1 OF 21
36	LOG OF TEST BORINGS 2 OF 21
37	LOG OF TEST BORINGS 3 OF 21
38	LOG OF TEST BORINGS 4 OF 21
39	LOG OF TEST BORINGS 5 OF 21
40	LOG OF TEST BORINGS 6 OF 21
41	LOG OF TEST BORINGS 7 OF 21
42	LOG OF TEST BORINGS 8 OF 21
43	LOG OF TEST BORINGS 9 OF 21
44	LOG OF TEST BORINGS 10 OF 21
45	LOG OF TEST BORINGS 11 OF 21
46	LOG OF TEST BORINGS 12 OF 21
47	LOG OF TEST BORINGS 13 OF 21
48	LOG OF TEST BORINGS 14 OF 21
49	LOG OF TEST BORINGS 15 OF 21
50	LOG OF TEST BORINGS 16 OF 21
51	LOG OF TEST BORINGS 17 OF 21
52	LOG OF TEST BORINGS 18 OF 21
53	LOG OF TEST BORINGS 19 OF 21
54	LOG OF TEST BORINGS 20 OF 21
55	LOG OF TEST BORINGS 21 OF 21

STANDARD PLANS DATED JULY 2004

A62C	LIMITS OF PAYMENT FOR EXCAVATION & BACKFILL, BRIDGE
B0-1	BRIDGE DETAILS
B0-3	BRIDGE DETAILS
B0-5	BRIDGE DETAILS
B0-13	BRIDGE DETAILS
B2-3	400 mm AND 600 mm CAST-IN-DRILLED-HOLE CONCRETE PILE
B3-1	RETAINING WALL TYPE 1 H=1200 THROUGH 9100 mm
B3-8	RETAINING WALL DETAILS NO. 1
B7-1	BOX GIRDER DETAILS
B7-7	DECK DRAIN TYPE D-3
B7-10	UTILITY OPENING, BOX GIRDER
B11-51	TUBULAR HAND RAILING

STANDARD PLAN SHEET NO.

DETAIL NO.

QUANTITIES

PREPARE CONCRETE BRIDGE DECK SURFACE	2 295	m^2
BRIDGE REMOVAL	LUMP	SUM
STRIPPING EXCAVATION	77	m^3
STRUCTURE EXCAVATION (BRIDGE)	695	m^3
STRUCTURE EXCAVATION (TYPE D)	440	m^3
STRUCTURE BACKFILL (BRIDGE)	730	m^3
600 MM CAST-IN-DRILLED-HOLE CONCRETE PILING	414	m
MICROPILE	1 999	m
STRUCTURAL CONCRETE, BRIDGE FOOTING	510	m^3
STRUCTURAL CONCRETE, BRIDGE	2 970	m^3
STRUCTURAL CONCRETE, APPROACH SLAB (TYPE EQ)	21	m^3
FURNISH POLYESTER CONCRETE OVERLAY	44	m^3
PLACE POLYESTER CONCRETE OVERLAY	2 295	m^2
JOINT SEAL ASSEMBLY (MR 90 MM)	25	m
BAR REINFORCING STEEL (BRIDGE)	579 100	kg
BAR REINFORCING STEEL (EPOXY COATED)(BRIDGE)	200 000	kg
HEADED BAR REINFORCEMENT	1 740	EA
PUBLIC SAFETY PLAN	LUMP	SUM
WELDED STEEL PIPE CASING (BRIDGE)	40	m
ISOLATION CASING	1 802	kg
BRIDGE DECK DRAINAGE SYSTEM	179	kg
CALIFORNIA ST-20S BRIDGE RAIL	411	m

PILE DATA

Location	Pile Type	Design Loading (kN)	Nominal Resistance (kN)		Design Tip Elevation	Specifed Tip Elevation
			Compression	Tension		
Abut 1	600 mm CIDH	400	800	0	959.50	959.50
Pier 2	Micropile *	N/A	2860	890	*	*
Pier 6	Micropile *	N/A	2860	890	*	*
Pier 7	600 mm CIDH	N/A	1513	0	945.20	945.20

* - Inclined Micropile Cut-off and Tip Elevations vary. See "ARCH FOOTING DETAILS NO. 1" and "MICROPILE DETAILS" sheet.

Note:

1. Design Tip Elevations are controlled by compression.
2. For "PERFORMANCE TEST MICROPILE DATA", see "MICROPILE TEST DETAILS NO. 2" sheet.

Caltrans Metric

	BY	CHECKED
DESIGN	Eric Watson	Kevin Harper
DETAILS	Bob Huddleston	Kevin Harper
QUANTITIES	Mark Simonsen	Yihwin Huang

STATE OF CALIFORNIA
DEPARTMENT OF TRANSPORTATION

DIVISION OF ENGINEERING SERVICES
STRUCTURE DESIGN
DESIGN BRANCH 1

CU 02
EA 373101

BRIDGE NO. 09-0077
KILOMETER POST 56.8

SPANISH CREEK BRIDGE (REPLACE)
INDEX TO PLANS

ALL DIMENSIONS ARE IN MILLIMETERS UNLESS OTHERWISE SHOWN

ORIGINAL SCALE IN MILLIMETERS FOR REDUCED PLANS 0 10 20 30 40 50 60 70 80 90 100

DISREGARD PRINTS BEARING EARLIER REVISION DATES

REVISION DATES: 5-08-06 10-04-09 10-12-09 06-19-09 7-15-09 09-14-09 09-17-09 09-21-09 9-23-09

SHEET 2 OF 55

FILE => 09-0077-a-itp.dgn

STRUCTURES DESIGN DETAIL SHEET (METRIC) (REV.03-17-04)

USERNAME => trmikest DATE PLOTTED => 10-NOV-2009 TIME PLOTTED => 07:21

DIST	COUNTY	ROUTE	KILOMETER POST TOTAL PROJECT	SHEET No	TOTAL SHEETS
02	Plu	70	56.5/57.2	90	149

Eric Watson 10/23/09
REGISTERED CIVIL ENGINEER DATE

11-2-09
PLANS APPROVAL DATE

REGISTERED PROFESSIONAL ENGINEER Eric Watson No. 64723 Exp. 6-30-11 CIVIL STATE OF CALIFORNIA

The State of California or its officers or agents shall not be responsible for the accuracy or completeness of electronic copies of this plan sheet.

GENERAL NOTES
LOAD AND RESISTANCE FACTOR DESIGN

DESIGN: AASHTO LRFD Bridge Design Specifications, 3rd Edition, with the 2006 Interims and Caltrans Amendments.

SEISMIC DESIGN: Caltrans Seismic Design Criteria (SDC), Version 1.4, June 2006

DEAD LOAD: Includes 1.250 kPa for future wearing surface

LIVE LOADING: HL93 and Alternative and Permit design vehicle

SEISMIC LOADING: SDC ARS Curve for Soil Profile D (M = 6.5 ± 0.25)
Modified for Near Fault Affects per SDC 6.1.2.1
(Peak Rock Acceleration = 0.6 g)

REINFORCED CONCRETE: fy = 420 MPa,
f'c = 25 MPa, 28 MPa & 41 MPa
n = 8 & 7

FOOTING PRESSURE:

Location	Design H (mm)	Allowable (kPa)	Design (kPa)
Abutment 1 Retaining Walls	1800	220	90
	3600	220	135
Abutment 8	N/A	220	220
Abutment 8 Retaining Wall	2400	220	105
	4200	220	160

MICROPILES:

HS Thread bar: ASTM Designation A722
fu = 1034 MPa
fy = 827 MPa

Casing: API N-80, fy = 550 MPa

Grout: f'_c = 28 MPa

Structural Steel: fy = 345 MPa
(Other Than Casing)

STRUCTURAL STEEL:

Rolled Shapes & Plates: A572 Gr.50

Thread Rod: A449

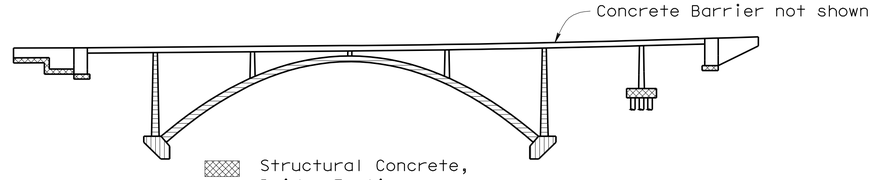

Structural Concrete, Bridge Footing (25 MPa @ 28 days)

Structural Concrete Bridge Footing (28 MPa @ 28 days)

Structural Concrete Bridge (25 MPa @ 28 days)

Structural Concrete Bridge (41 MPa @ 28 days)

CONCRETE STRENGTH AND TYPE LIMITS

NO SCALE

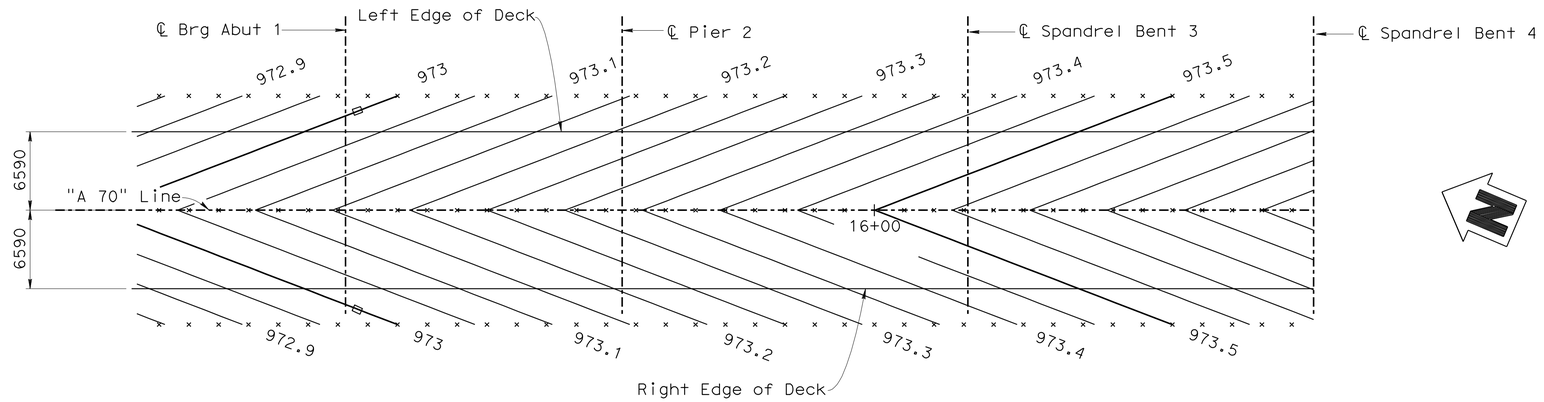

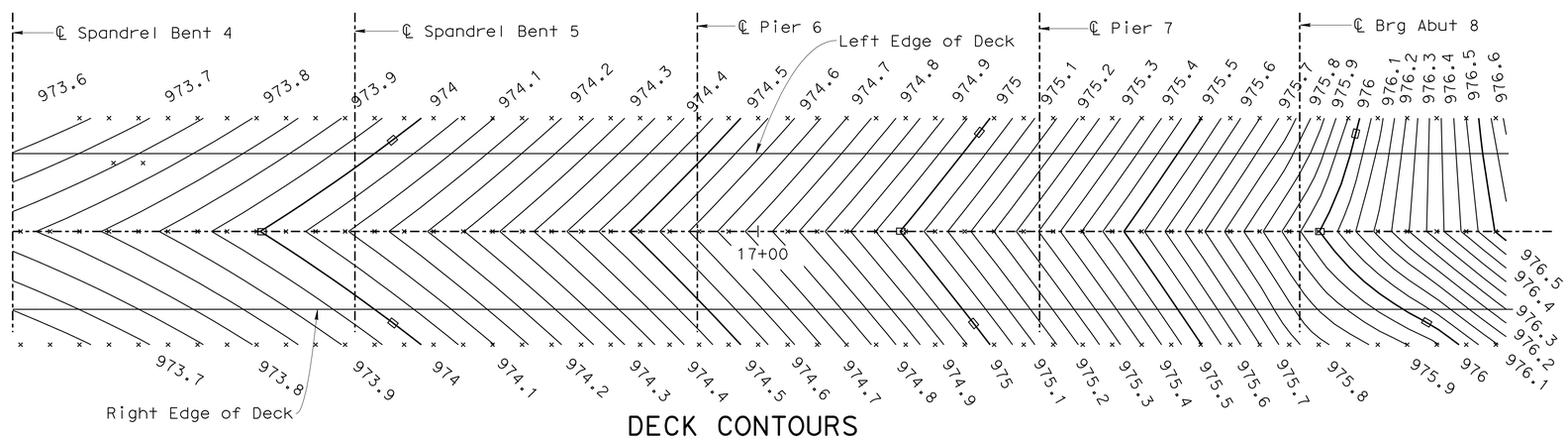

DECK CONTOURS

1:250

Deck Contour Notes:

1. Contour intervals = 0.05 m
2. Contours do not include comber
3. Contours at top of 19 mm polyester concrete overlay

▫ Indicates even meter contours

× Indicates 2.5 m interval along station line

Caltrans Metric

	BY	CHECKED
DESIGN	Eric Watson	Kevin Harper
DETAILS	Bob Huddleston/JZ	Kevin Harper
QUANTITIES	Mark Simonsen	Yihwin Huang

STATE OF CALIFORNIA
DEPARTMENT OF TRANSPORTATION

DIVISION OF ENGINEERING SERVICES
STRUCTURE DESIGN
DESIGN BRANCH 1

BRIDGE NO. 09-0077
KILOMETER POST 56.8

SPANISH CREEK BRIDGE (REPLACE)
DECK CONTOURS

ALL DIMENSIONS ARE IN MILLIMETERS UNLESS OTHERWISE SHOWN

ORIGINAL SCALE IN MILLIMETERS FOR REDUCED PLANS 0 10 20 30 40 50 60 70 80 90 100

CU 02
EA 373101

DISREGARD PRINTS BEARING EARLIER REVISION DATES

REVISION DATES: 5-05-06 09/24/09 10/06/09 10/14/09 05/18/09 06/19/09 6/25/09 7/08/09 09/15/09

SHEET 3 OF 55

FILE => 09-0077-d-dc01.dgn

STRUCTURES DESIGN DETAIL SHEET (METRIC) (REV.03-17-04)

USERNAME => trmikes1 DATE PLOTTED => 10-NOV-2009 TIME PLOTTED => 07:21

DIST	COUNTY	ROUTE	KILOMETER POST TOTAL PROJECT	SHEET No	TOTAL SHEETS
02	Plu	70	56.5/57.2	91	149

Eric Watson 10/23/09
REGISTERED CIVIL ENGINEER DATE

11-2-09
PLANS APPROVAL DATE

REGISTERED PROFESSIONAL ENGINEER Eric Watson No. 64273 Exp. 6-30-11 CIVIL STATE OF CALIFORNIA

The State of California or its officers or agents shall not be responsible for the accuracy or completeness of electronic copies of this plan sheet.

Caltrans Metric

SURVEY CONTROL

CM 35.32
Fnd REBAR WITH ALUMINUM CAP
19.359 M Lt. ℄ "A70" LINE PROPOSED Rte 70
Sta. 15+60.531
N 577493.411
E 2088460.326
Elev. = 972.631

CM 35.44 (SHOWN ON PLAN NO.2)
Fnd REBAR WITH ALUMINUM CAP
17.568 M Lt. ℄ "A70" LINE PROPOSED Rte 70
Sta. 17+54.299
N 577314.454
E 2088534.647
Elev. = 974.818

HYDROLOGIC SUMMARY

Drainage Area: 508 km²		
	Design Flood	Base Flood
Frequency (years)	50	100
Discharge (Cubic meters per second)	636	837
Water Surface Elev. at Bridge (meters)	930.82	931.50

Flood plain data are based upon information available when plans were prepared and are shown to meet federal requirements. The accuracy of said information is not warranted by the State and interested or affected parties should make their own investigations.

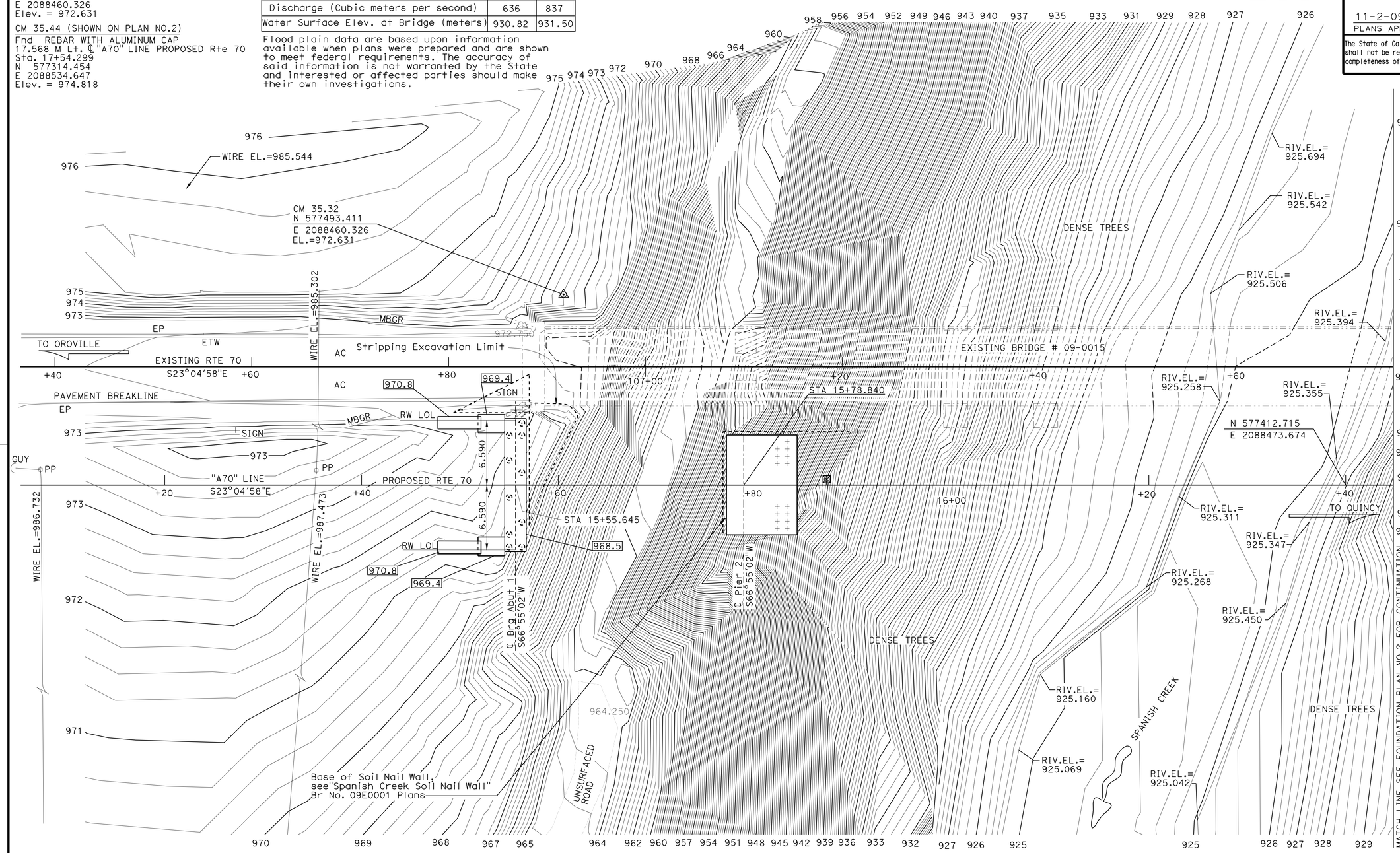

Notes:

- Denotes 600 ø CIDH pile
- X - Denotes bottom of Ftg Elev, For Ftg Elev of Pier 2 and Pier 6 see "View A-A" on "Arch Footing Details NO. 1" sheet
- Denotes Test Pile, see "Micropile Test Details No. 2" sheet
- Denotes Inclined Micropile, see "Micropile Details" sheet

ALL DIMENSIONS ARE IN METERS UNLESS OTHERWISE SHOWN

PRELIMINARY INVESTIGATION SECTION

SCALE	VERT. DATUM NAVD88	PHOTOGRAMMETRY AS OF:		
1:200	HORZ. DATUM NAD83	SURVEYED BY T.GILLETT/DISTRICT	DRAFTED BY T.ZOLNIKOVA 08/2005	
ALIGNMENT TIES DIST.TRAVERSE SHEET		FIELD CHECKED BY	CHECKED BY L.TRAN 08/2005	

	BY	CHECKED
DESIGN	Eric Watson	M. Licha/K. Harper
DETAILS	Bob Huddleston /JZ	M. Licha/K. Harper
QUANTITIES	Mark Simonsen	Yihwin Huang

STATE OF CALIFORNIA
DEPARTMENT OF TRANSPORTATION

DIVISION OF ENGINEERING SERVICES
STRUCTURE DESIGN
DESIGN BRANCH 1

CU 02
EA 373101

BRIDGE NO. 09-0077
KILOMETER POST 56.8

SPANISH CREEK BRIDGE (REPLACE)
FOUNDATION PLAN NO.1

STRUCTURES FOUNDATION PLAN SHEET (METRIC) (REV.12-1-01)

ORIGINAL SCALE IN MILLIMETERS FOR REDUCED PLANS 0 10 20 30 40 50 60 70 80 90 100

DISREGARD PRINTS BEARING EARLIER REVISION DATES

REVISION DATES (PRELIMINARY STAGE ONLY): 09/01/05 10/06/09 06-06-07 06-26-07 05/18/09 06/11/09 06/19/09 06/25/09 09/16/09

SHEET 4 OF 55

FILE => 09-0077-e-fp101.dgn

USERNAME => trmikesl DATE PLOTTED => 10-NOV-2009 TIME PLOTTED => 07:21

DIST	COUNTY	ROUTE	KILOMETER POST TOTAL PROJECT	SHEET No	TOTAL SHEETS
02	Plu	70	56.5/57.2	92	149

Eric Watson 10/23/09
REGISTERED CIVIL ENGINEER DATE

11-2-09
PLANS APPROVAL DATE

REGISTERED PROFESSIONAL ENGINEER Eric Watson No. 64273 Exp. 6-30-11 CIVIL STATE OF CALIFORNIA

The State of California or its officers or agents shall not be responsible for the accuracy or completeness of electronic copies of this plan sheet.

Caltrans Metric

EXISTING CURVE DATA

NO	R	Δ	T	L
A	213.360	30°54'0"	58.970	115.067

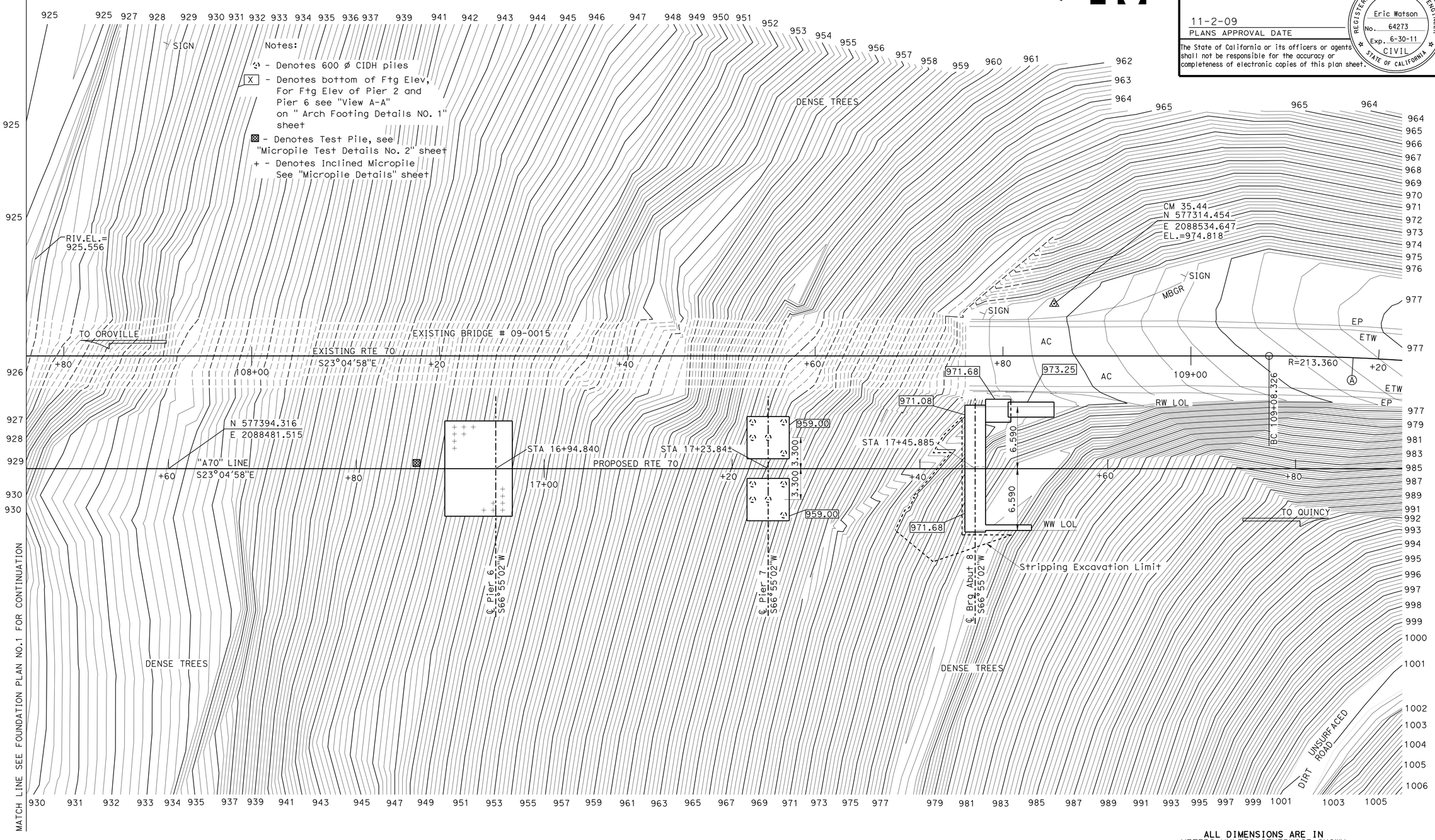

ALL DIMENSIONS ARE IN METERS UNLESS OTHERWISE SHOWN

PRELIMINARY INVESTIGATION SECTION

SCALE	VERT. DATUM NAVD88	PHOTOGRAMMETRY AS OF:			
1:200	HORZ. DATUM NAD83	SURVEYED	BY T.GILLETT/DISTRICT	DRAFTED	BY T.ZOLNIKOVA 08/2005
ALIGNMENT TIES DIST.TRAVERSE SHEET		FIELD CHECKED	BY	CHECKED	BY L.TRAN 08/2005

	BY	CHECKED
DESIGN	Eric Watson	M. Licha/K. Harper
DETAILS	Bob Huddleston/JZ	M. Licha/K. Harper
QUANTITIES	Mark Simonsen	Yihwin Huang

STATE OF CALIFORNIA
DEPARTMENT OF TRANSPORTATION

DIVISION OF ENGINEERING SERVICES
STRUCTURE DESIGN
DESIGN BRANCH 1

BRIDGE NO. 09-0077
KILOMETER POST 56.8

SPANISH CREEK BRIDGE (REPLACE)
FOUNDATION PLAN NO.2

STRUCTURES FOUNDATION PLAN SHEET (METRIC) (REV.12-1-01)

ORIGINAL SCALE IN MILLIMETERS FOR REDUCED PLANS 0 10 20 30 40 50 60 70 80 90 100

CU 02
EA 373101

DISREGARD PRINTS BEARING EARLIER REVISION DATES →

REVISION DATES (PRELIMINARY STAGE ONLY): 09/04/05 10/06/09 06/06/07 06/26/07 05/18/09 06/17/09 06/19/09 06/25/09 09/17/09

SHEET 5 OF 55

FILE => 09-0077-e-fp102.dgn

USERNAME => trmikest DATE PLOTTED => 10-NOV-2009 TIME PLOTTED => 07:22

DIST	COUNTY	ROUTE	KILOMETER POST TOTAL PROJECT	SHEET No	TOTAL SHEETS
02	Plu	70	56.5/57.2	93	149

Eric Watson 10/23/09
REGISTERED CIVIL ENGINEER DATE

11-2-09
PLANS APPROVAL DATE

REGISTERED PROFESSIONAL ENGINEER Eric Watson No. 64273 Exp. 6-30-11 CIVIL STATE OF CALIFORNIA

The State of California or its officers or agents shall not be responsible for the accuracy or completeness of electronic copies of this plan sheet.

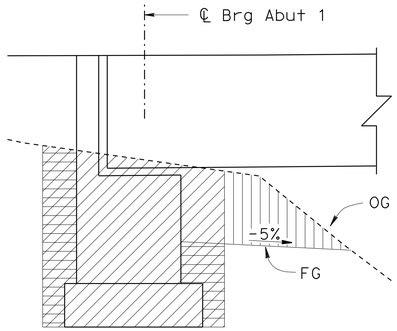

SECTION THRU ABUTMENT

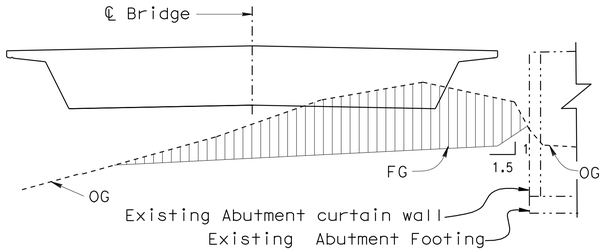

SECTION THROUGH BERM

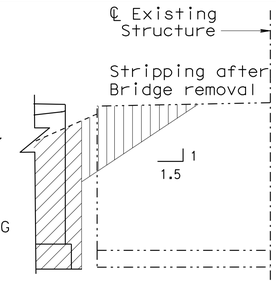

SECTION BEHIND EXISTING BACKWALL

ABUTMENT 1

NO SCALE

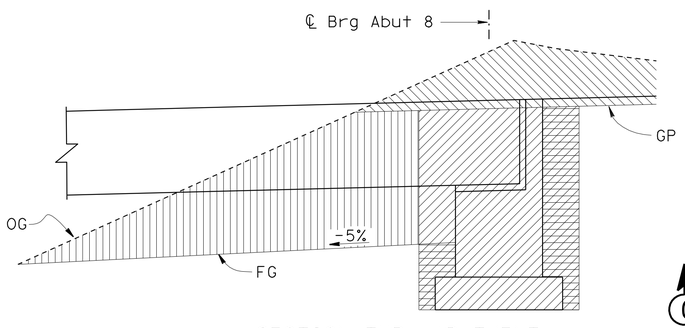

SECTION THRU ABUTMENT

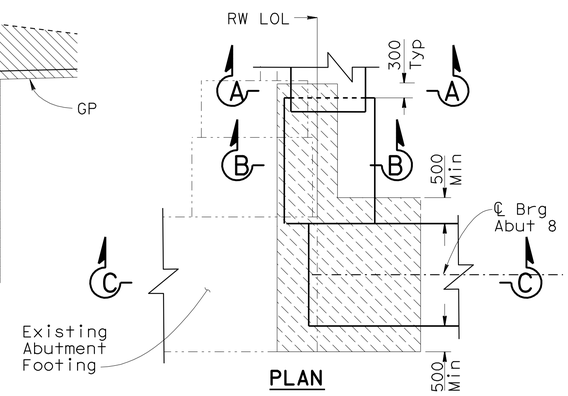

PLAN

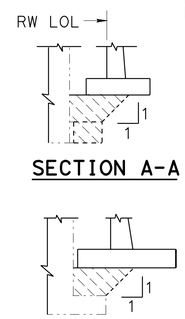

SECTION A-A

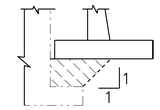

SECTION B-B

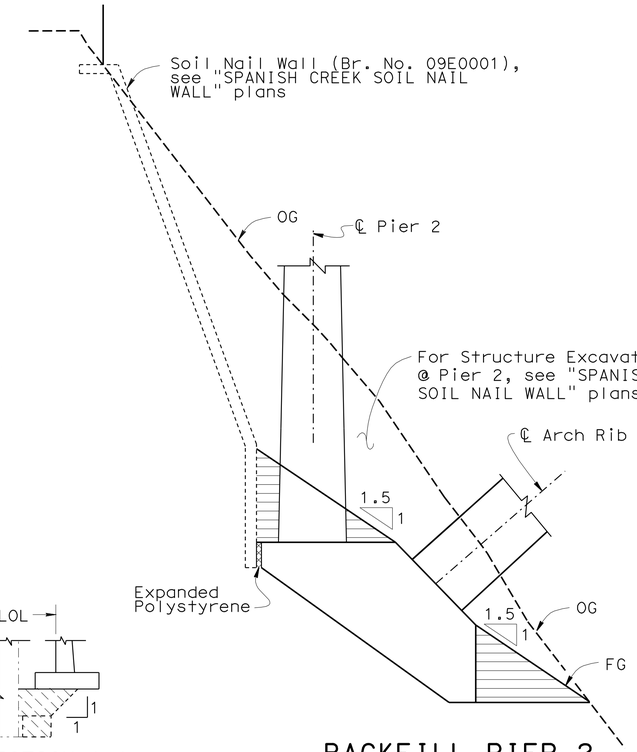

BACKFILL PIER 2

NO SCALE

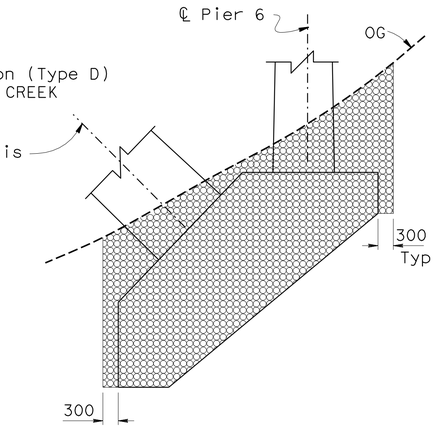

EXCAVATION PIER 6

NO SCALE

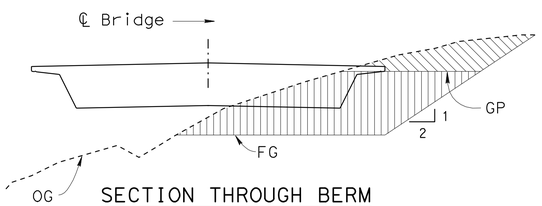

SECTION THROUGH BERM

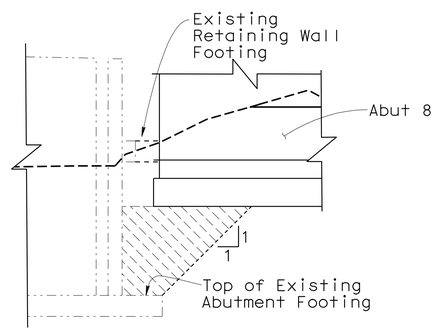

SECTION C-C

ABUTMENT 8

NO SCALE

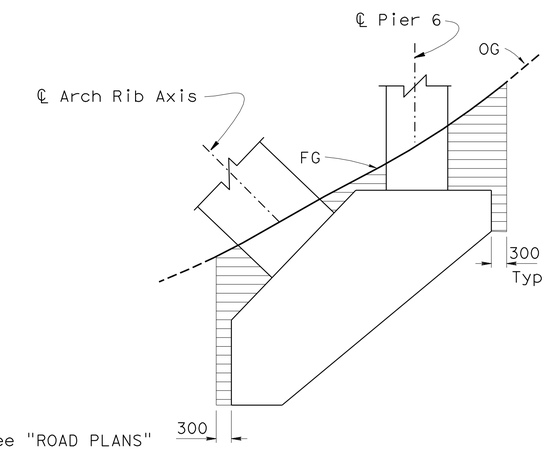

BACKFILL PIER 6

NO SCALE

Legend:

- Indicates Stripping Excavation
- Indicates Structure Excavation
- Indicates Roadway Excavation, see "ROAD PLANS"
- Indicates Structure Backfill
- Indicates Structure Excavation "Type D"
- Indicates over excavation area where loose fill may be present Backfill with slurry cement to the bottom of footing elevation

Caltrans Metric

	BY	CHECKED
DESIGN	Eric Watson	K Harper/M Licha
DETAILS	Bob Huddleston	K Harper/M Licha
QUANTITIES	Mark Simonsen	Yihwin Huang

STATE OF CALIFORNIA DEPARTMENT OF TRANSPORTATION

DIVISION OF ENGINEERING SERVICES STRUCTURE DESIGN
DESIGN BRANCH 1

BRIDGE NO. 09-0077
KILOMETER POST 56.8

SPANISH CREEK BRIDGE (REPLACE)
LIMITS OF PAYMENT

ALL DIMENSIONS ARE IN MILLIMETERS UNLESS OTHERWISE SHOWN

ORIGINAL SCALE IN MILLIMETERS FOR REDUCED PLANS 0 10 20 30 40 50 60 70 80 90 100

CU 02
EA 373101

DISREGARD PRINTS BEARING EARLIER REVISION DATES

REVISION DATES: 7-19-06 10/15/09 05/28/09 06/28/09 07/24/09 9-11-09 9-21-09 9-28-09 9/25/09

SHEET 6 OF 55

FILE => 09-0077-e-lpay.dgn

STRUCTURES DESIGN DETAIL SHEET (METRIC) (REV.03-17-04)

USERNAME => trmikest DATE PLOTTED => 10-NOV-2009 TIME PLOTTED => 07:22

DIST	COUNTY	ROUTE	KILOMETER POST TOTAL PROJECT	SHEET No	TOTAL SHEETS
02	Plu	70	56.5/57.2	94	149

Eric Watson 10/23/09
REGISTERED CIVIL ENGINEER DATE

11-2-09
PLANS APPROVAL DATE

REGISTERED PROFESSIONAL ENGINEER Eric Watson No. 64273 Exp. 6-30-11 CIVIL STATE OF CALIFORNIA

The State of California or its officers or agents shall not be responsible for the accuracy or completeness of electronic copies of this plan sheet.

Notes:

1. For Section A-A, see "ABUTMENT DETAILS NO. 1" sheet.
2. Pipe 400 Std casings shall be installed at each utility opening. The casings shall be centered inside the 600 x 600 diaphragm utility openings.
3. For Reinf details not shown see "RAILING TYPE ST-20 DETAILS NO. 3" sheet.

Indicates 600 ø CIDH piles

Indicates existing structure

Indicates waterstop

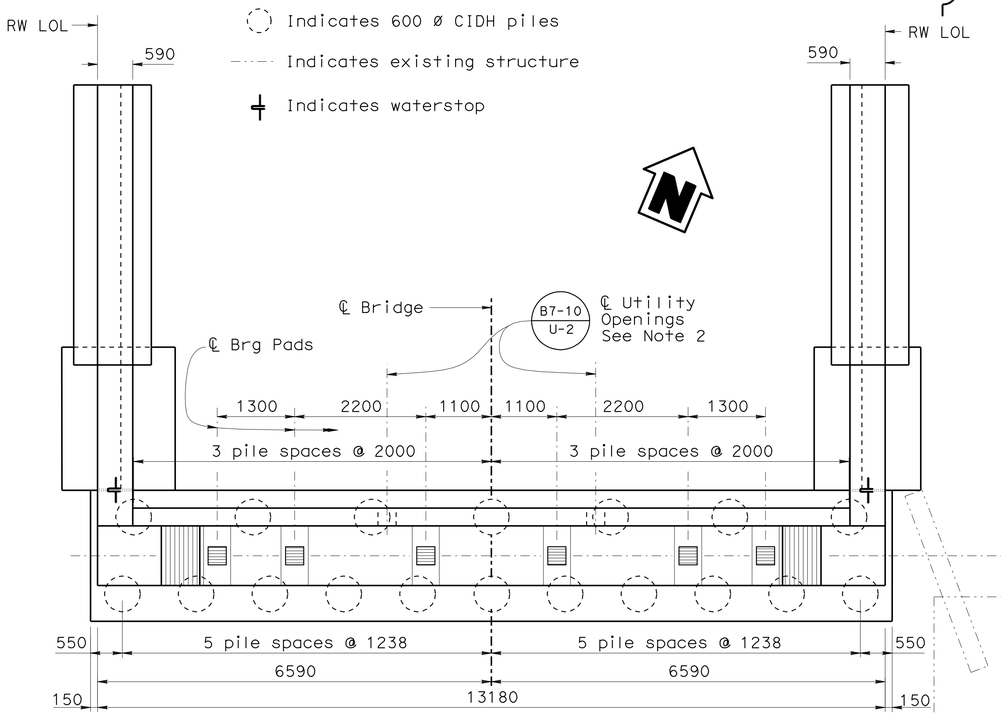

PLAN
1:50

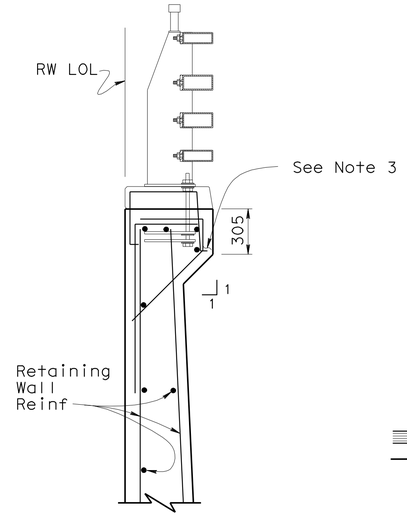

SECTION X-X B3-1
1:20

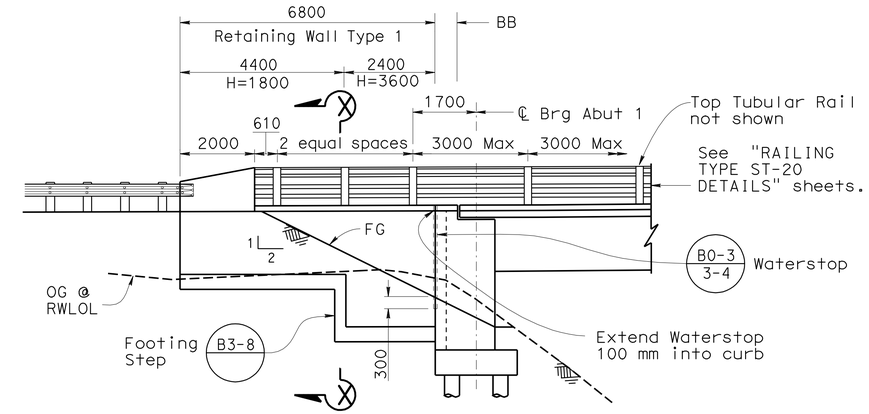

ELEVATION B-B B3-1
1:80

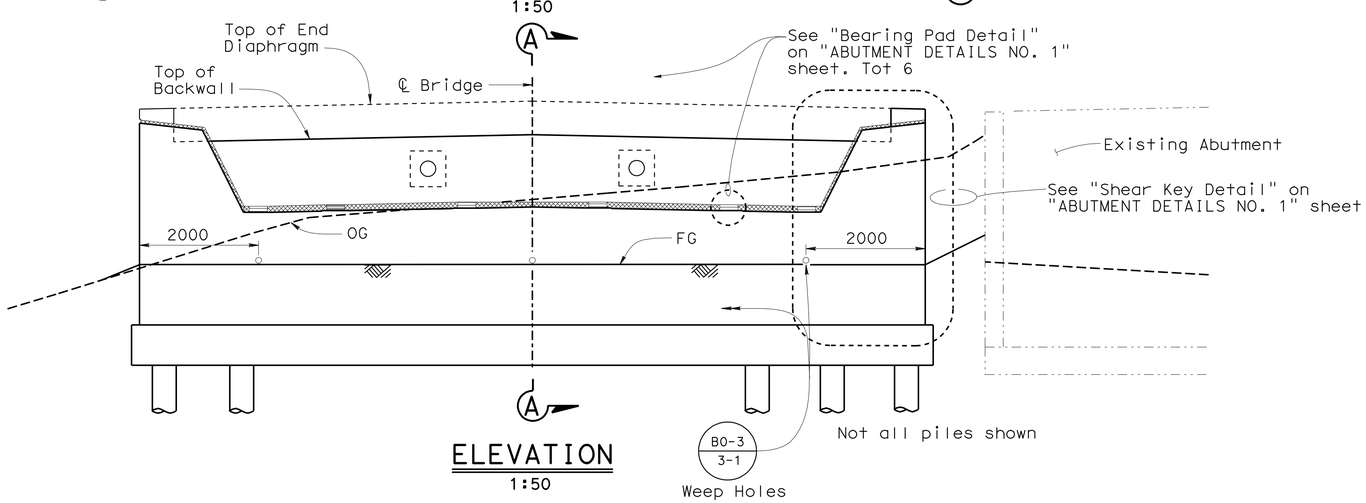

ELEVATION
1:50

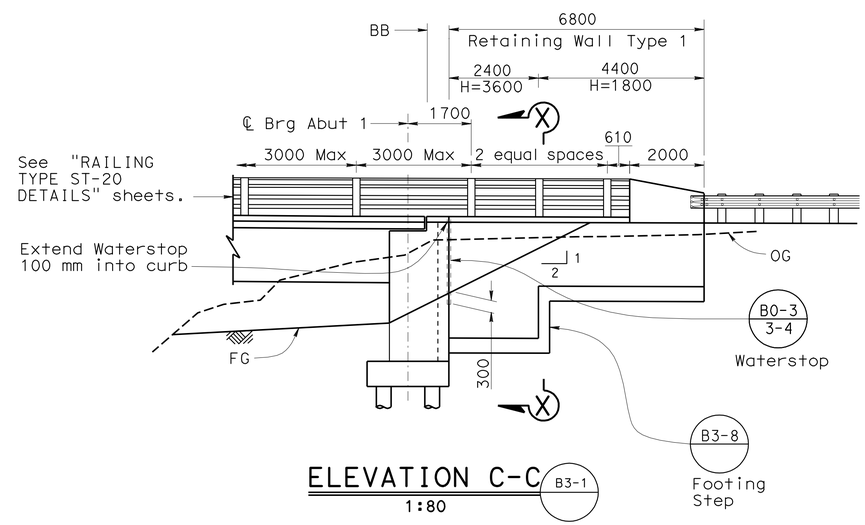

ELEVATION C-C B3-1
1:80

DESIGN	BY Eric Watson	CHECKED Mahfoud Licha	
DETAILS	BY Bob Huddleston/JZ	CHECKED Mahfoud Licha	
QUANTITIES	BY Mark Simonsen	CHECKED K Lee/A Pearson	

STATE OF CALIFORNIA
DEPARTMENT OF TRANSPORTATION

DIVISION OF ENGINEERING SERVICES
STRUCTURE DESIGN
DESIGN BRANCH 1

BRIDGE NO. 09-0077
KILOMETER POST 56.8

SPANISH CREEK BRIDGE (REPLACE)
ABUTMENT 1 LAYOUT

ALL DIMENSIONS ARE IN MILLIMETERS UNLESS OTHERWISE SHOWN

ORIGINAL SCALE IN MILLIMETERS FOR REDUCED PLANS 0 10 20 30 40 50 60 70 80 90 100

CU 02
EA 373101

DISREGARD PRINTS BEARING EARLIER REVISION DATES

REVISION DATES: 5-31-06 | 06/24/09 | 09/11/09 | 9/25/09 | 9/24/09 | 10/06/09 | 10/14/09 | 05/18/09 | 06/24/09

SHEET 7 OF 55

FILE => 09-0077-f-a01_lo1.dgn

STRUCTURES DESIGN DETAIL SHEET (METRIC) (REV.03-17-04)

USERNAME => trmikest DATE PLOTTED => 10-NOV-2009 TIME PLOTTED => 07:22

DIST	COUNTY	ROUTE	KILOMETER POST TOTAL PROJECT	SHEET No	TOTAL SHEETS
02	Plu	70	56.5/57.2	95	149

Eric Watson 10/23/09
REGISTERED CIVIL ENGINEER DATE

11-2-09
PLANS APPROVAL DATE

REGISTERED PROFESSIONAL ENGINEER Eric Watson No. 64273 Exp. 6-30-11 CIVIL STATE OF CALIFORNIA

The State of California or its officers or agents shall not be responsible for the accuracy or completeness of electronic copies of this plan sheet.

Notes:

1. For "Section F-F", see "ABUTMENT DETAILS NO. 2" sheet.
2. Pipe 400 Std casings shall be installed at each 600 x 600 utility opening.
3. For Section X-X, see "ABUTMENT 1 LAYOUT" sheet.
4. For railing Reinf, see "RAILING TYPE ST-20S DETAILS" sheets.

Indicates existing structure

Indicates waterstop

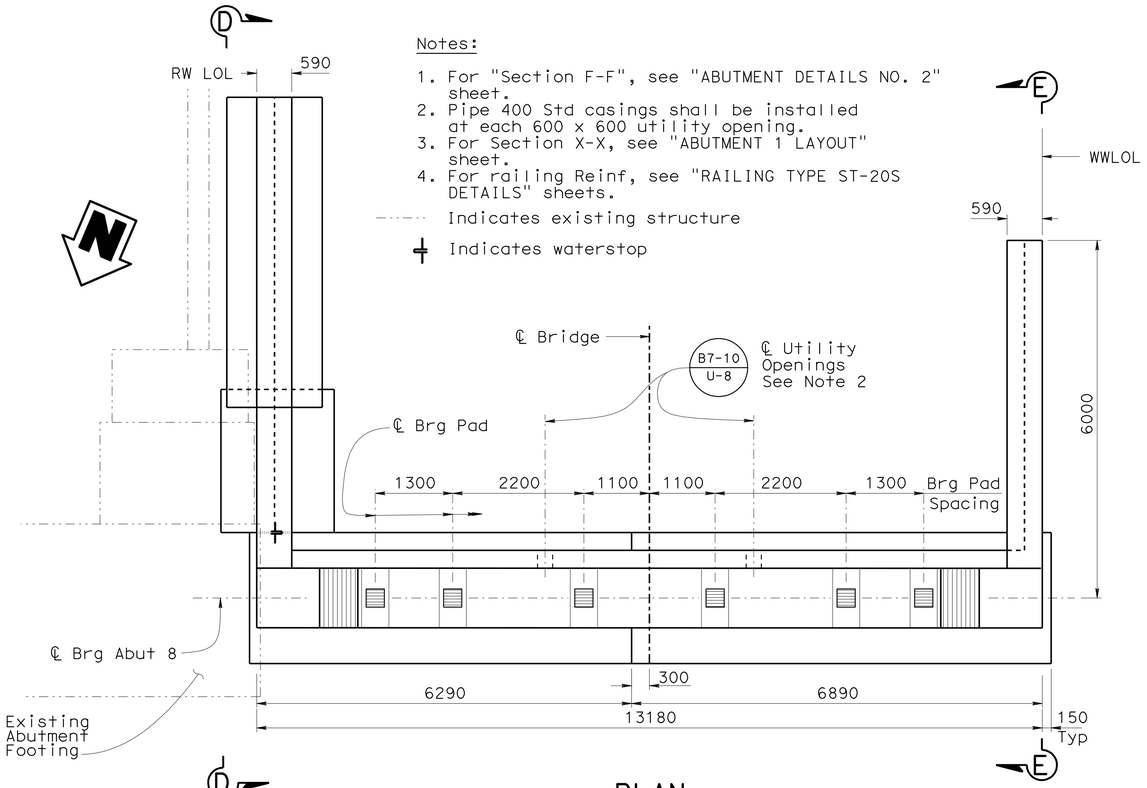

PLAN
1:50

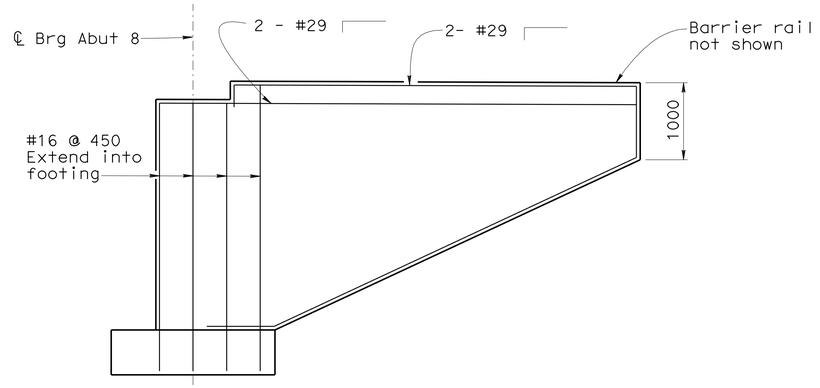

WINGWALL ELEVATION B0-1
1:40

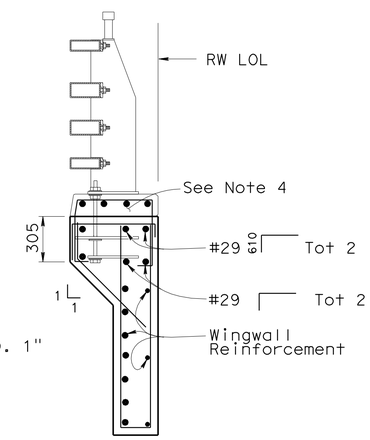

SECTION G-G B0-1
1:20

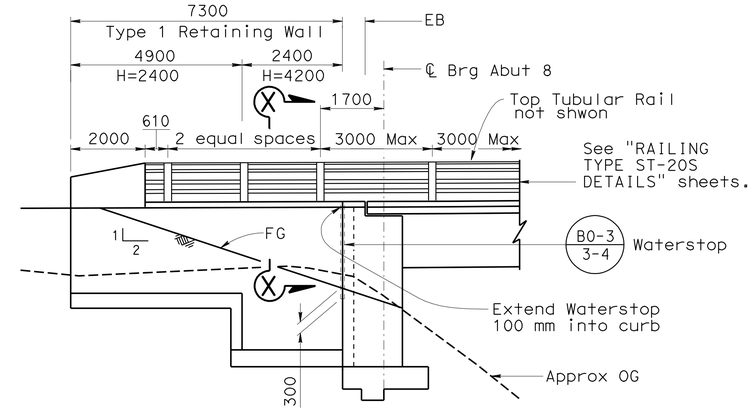

ELEVATION D-D B3-1
1:80

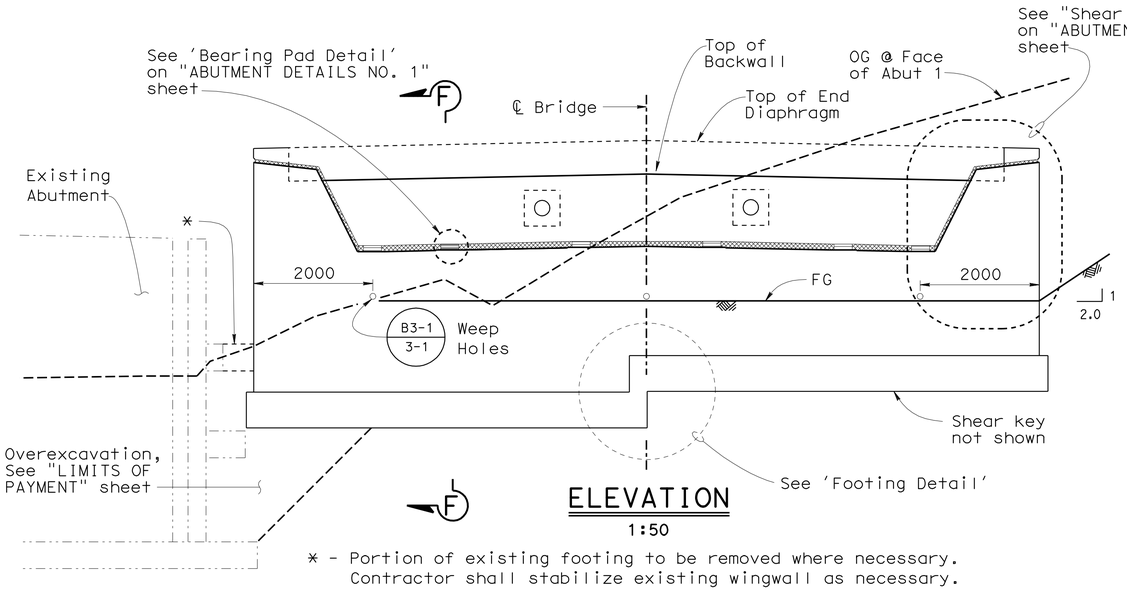

ELEVATION
1:50

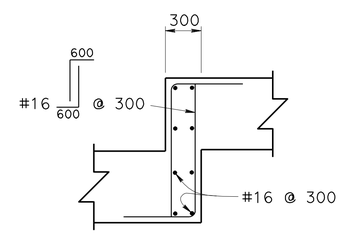

FOOTING DETAIL
1:25

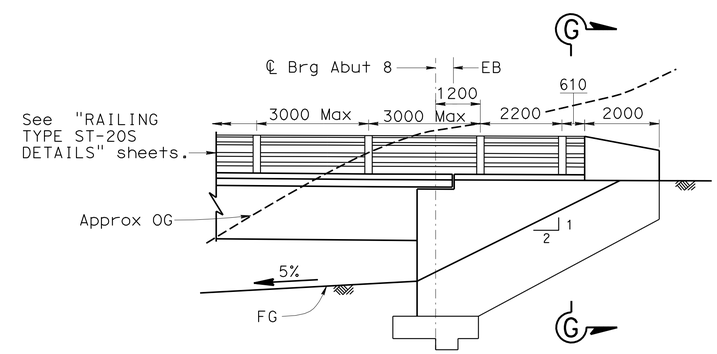

ELEVATION E-E B0-1
1:80

* - Portion of existing footing to be removed where necessary.
Contractor shall stabilize existing wingwall as necessary.

Caltrans Metric

	BY	CHECKED
DESIGN	Eric Watson	Mahfoud Licha
DETAILS	Bob Huddleston/JZ	Mahfoud Licha
QUANTITIES	Mark Simonsen	K Lee/ A Pearson

STATE OF CALIFORNIA
DEPARTMENT OF TRANSPORTATION

DIVISION OF ENGINEERING SERVICES
STRUCTURE DESIGN
DESIGN BRANCH 1

BRIDGE NO. 09-0077
KILOMETER POST 56.8

SPANISH CREEK BRIDGE (REPLACE)
ABUTMENT 8 LAYOUT

ALL DIMENSIONS ARE IN MILLIMETERS UNLESS OTHERWISE SHOWN

ORIGINAL SCALE IN MILLIMETERS FOR REDUCED PLANS 0 10 20 30 40 50 60 70 80 90 100

CU 02
EA 373101

DISREGARD PRINTS BEARING EARLIER REVISION DATES

REVISION DATES: 6-01-06 01-31-07 02-05-07 06-01-07 06/18/09 06/22/09 9/23/09 9/24/09 10/14/09

SHEET 8 OF 55

FILE => 09-0077-f-a01_1o8.dgn

STRUCTURES DESIGN DETAIL SHEET (METRIC) (REV.03-17-04)

USERNAME => trmikesl DATE PLOTTED => 10-NOV-2009 TIME PLOTTED => 07:22

DIST	COUNTY	ROUTE	KILOMETER POST TOTAL PROJECT	SHEET No	TOTAL SHEETS
02	Plu	70	56.5/57.2	96	149

Eric Watson 10/23/09
REGISTERED CIVIL ENGINEER DATE

11-2-09
PLANS APPROVAL DATE

REGISTERED PROFESSIONAL ENGINEER Eric Watson No. 64273 Exp. 6-30-11 CIVIL STATE OF CALIFORNIA

The State of California or its officers or agents shall not be responsible for the accuracy or completeness of electronic copies of this plan sheet.

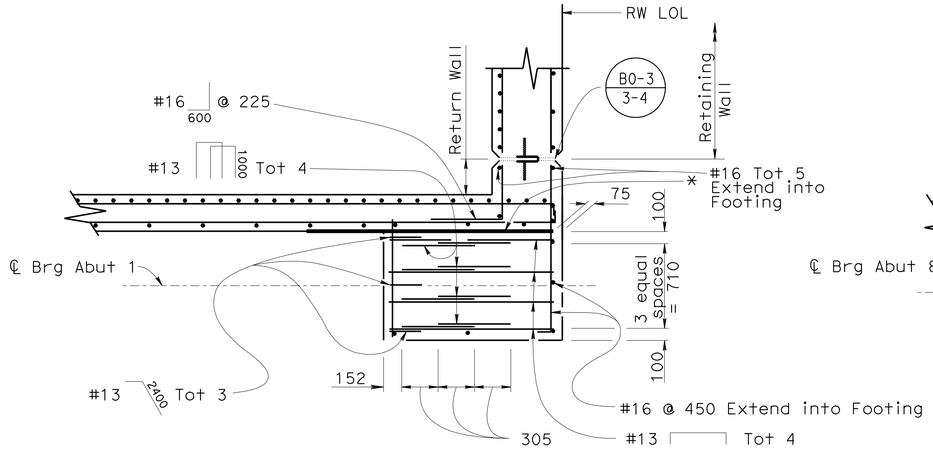

* - Hardboard placed between backwall and shear key @ Abut 1 only

ABUTMENT 1

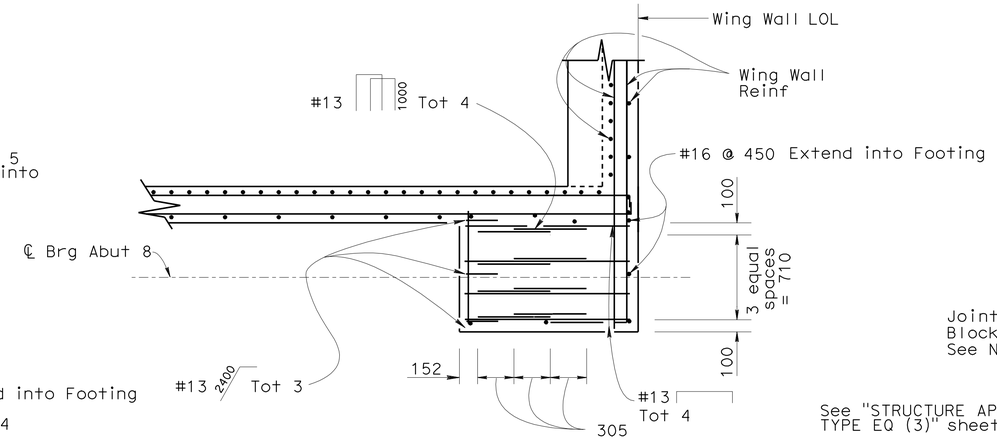

Note: Right side with wingwall shown, for return wall left side, see Abut 1

ABUTMENT 8

SECTION G-G
1:25

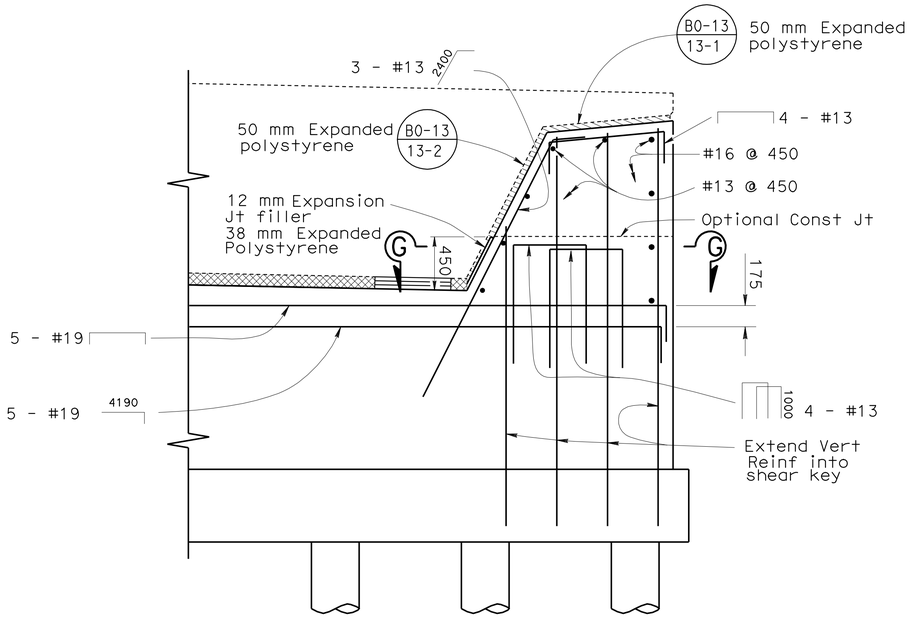

See Notes 3 & 4

SHEAR KEY DETAIL
1:25

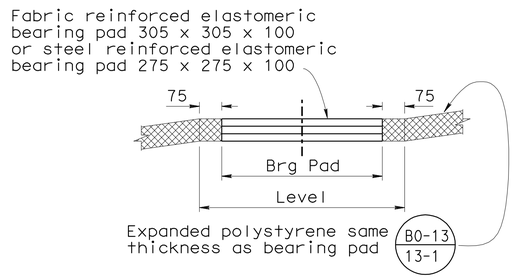

BEARING PAD DETAIL
NO SCALE

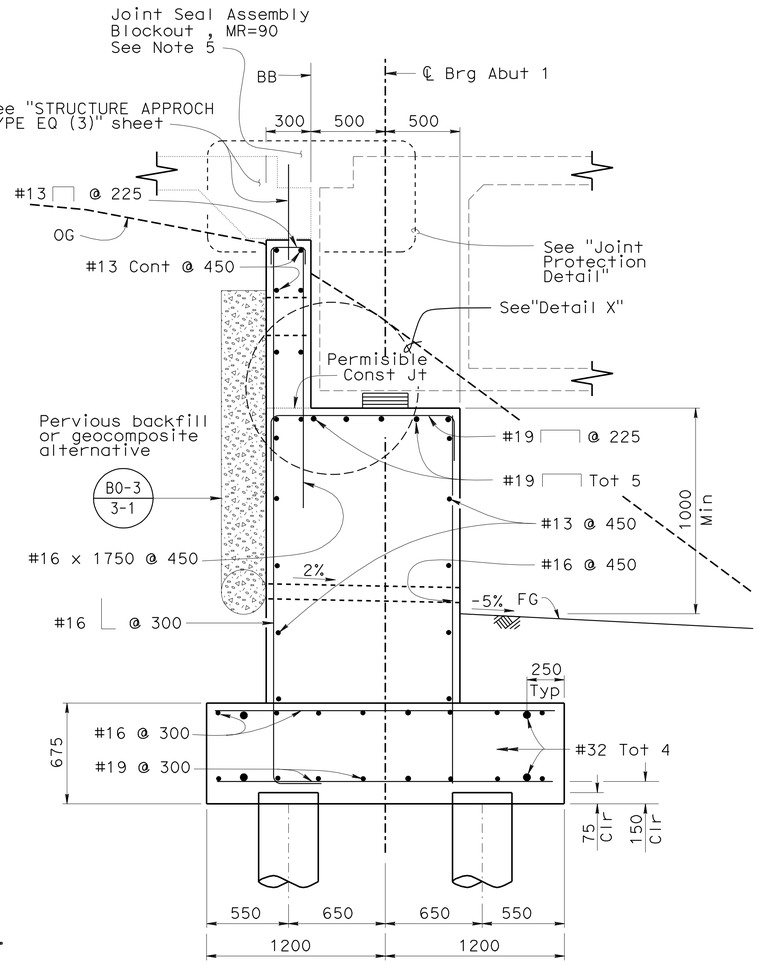

SECTION A-A
1:20

Notes:

1. For location of "Section A- A", see "ABUTMENT 1 LAYOUT" sheet.
2. For "Joint Protection Detail"and "Detail X", see "ABUTMENT DETAILS NO. 2" sheet.
3. Abutment reinforcement omitted for clarity on "Shear Key Detail".
4. Abutment 1 shown in "Shear Key Detail", Abutment 8 similar.
5. For "Expansion Joint Details", see "JOINT SEAL ASSEMBLY (MAXIMUM MOVEMENT RATING = 100 mm)" sheet.

Caltrans Metric

	BY	CHECKED
DESIGN	Eric Watson	Mahfoud Licha
DETAILS	Bob Huddleston/JZ	Mahfoud Licha
QUANTITIES	Mark Simonsen	KL/AP

STATE OF CALIFORNIA
DEPARTMENT OF TRANSPORTATION

DIVISION OF ENGINEERING SERVICES
STRUCTURE DESIGN
DESIGN BRANCH 1

BRIDGE NO. 09-0077
KILOMETER POST 56.8

SPANISH CREEK BRIDGE (REPLACE)
ABUTMENT DETAILS NO. 1

ALL DIMENSIONS ARE IN MILLIMETERS UNLESS OTHERWISE SHOWN

ORIGINAL SCALE IN MILLIMETERS FOR REDUCED PLANS 0 10 20 30 40 50 60 70 80 90 100

CU 02
EA 373101

DISREGARD PRINTS BEARING EARLIER REVISION DATES

REVISION DATES: 9-20-09 | 6-08-06 | 12-18-06 | 02-01-07 | 06-01-07 | 06-26-07 | 06/18/09 | 06/19/09 | 06/29/09

SHEET 9 OF 55

FILE => 09-0077-f-a02dt01.dgn

STRUCTURES DESIGN DETAIL SHEET (METRIC) (REV.03-17-04)

USERNAME => trmikesl DATE PLOTTED => 10-NOV-2009 TIME PLOTTED => 07:22

DIST	COUNTY	ROUTE	KILOMETER POST TOTAL PROJECT	SHEET No	TOTAL SHEETS
02	Plu	70	56.5/57.2	97	149

Eric Watson 10/23/09
REGISTERED CIVIL ENGINEER DATE

11-2-09
PLANS APPROVAL DATE

REGISTERED PROFESSIONAL ENGINEER Eric Watson No. 64273 Exp. 6-30-11 CIVIL STATE OF CALIFORNIA

The State of California or its officers or agents shall not be responsible for the accuracy or completeness of electronic copies of this plan sheet.

Note:

For location of "Section F-F", see "ABUTMENT 8 LAYOUT" sheet.

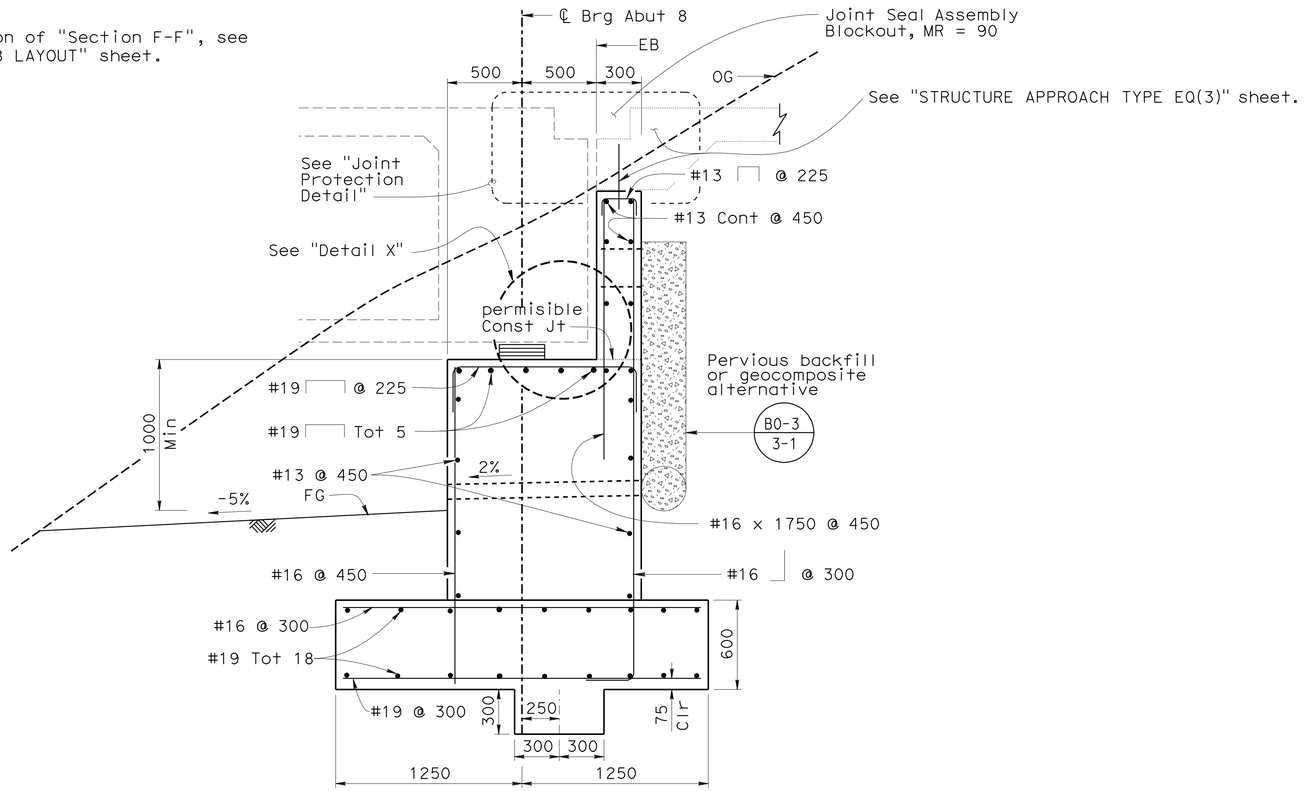

SECTION F-F

1:20

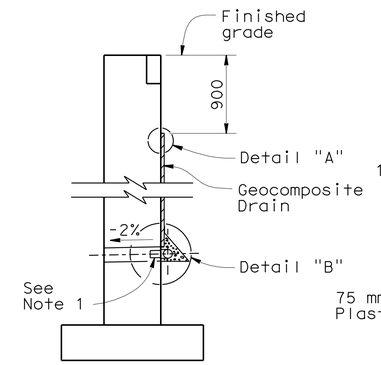

WALL SECTION

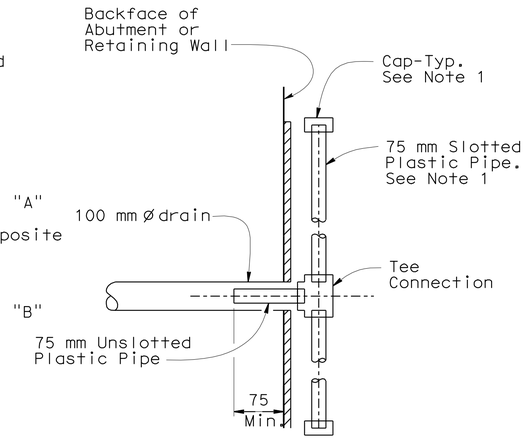

SECTION A-A

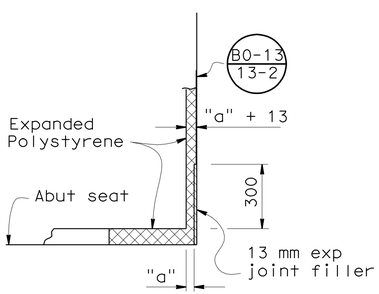

DETAIL "X"

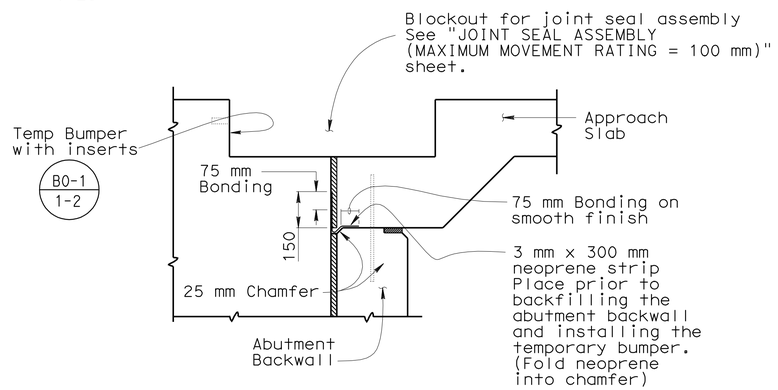

JOINT PROTECTION DETAIL

NO SCALE

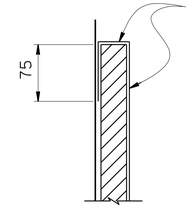

DETAIL "A"

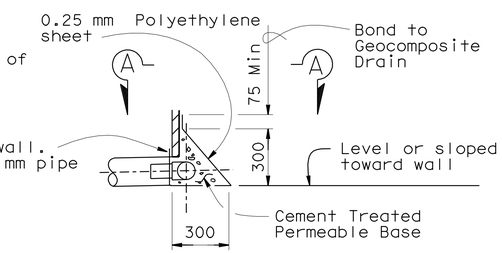

DETAIL "B"

ALTERNATIVE TO BRIDGE DETAIL B0-3 / 3-1

Notes:

1. Geocomposite drain, cement treated permeable base, and 75 mm ø slotted plastic pipe continuous behind retaining wall or abutment. Cap ends of pipe. Provide "Tee" connection at each 100 mm ø drain.

WEEP HOLE AND GEOCOMPOSITE DRAIN

NO SCALE

Caltrans Metric

	BY	CHECKED
DESIGN	Eric Watson	Mahfoud Licha
DETAILS	Bob Huddleston/JZ	Mahfoud Licha
QUANTITIES	Mark Simonsen	KL/AP

STATE OF CALIFORNIA
DEPARTMENT OF TRANSPORTATION

DIVISION OF ENGINEERING SERVICES
STRUCTURE DESIGN
DESIGN BRANCH 1

CU 02
EA 373101

BRIDGE NO. 09-0077
KILOMETER POST 56.8

SPANISH CREEK BRIDGE (REPLACE)
ABUTMENT DETAILS NO. 2

ALL DIMENSIONS ARE IN MILLIMETERS UNLESS OTHERWISE SHOWN

ORIGINAL SCALE IN MILLIMETERS FOR REDUCED PLANS 0 10 20 30 40 50 60 70 80 90 100

DISREGARD PRINTS BEARING EARLIER REVISION DATES

REVISION DATES: 02-01-07 02-05-07 06-14-07 06/18/09 06/19/09 06/22/09 9-22-09 10/07/09

SHEET 10 OF 55

FILE => 09-0077-f-a02dt02.dgn

STRUCTURES DESIGN DETAIL SHEET (METRIC) (REV.03-17-04)

USERNAME => trmikes1 DATE PLOTTED => 10-NOV-2009 TIME PLOTTED => 07:23

DIST	COUNTY	ROUTE	KILOMETER POST TOTAL PROJECT	SHEET No	TOTAL SHEETS
02	Plu	70	56.5/57.2	98	149

Eric Watson 10/23/09
REGISTERED CIVIL ENGINEER DATE

11-2-09
PLANS APPROVAL DATE

REGISTERED PROFESSIONAL ENGINEER Eric Watson No. 64273 Exp. 6-30-11 CIVIL STATE OF CALIFORNIA

The State of California or its officers or agents shall not be responsible for the accuracy or completeness of electronic copies of this plan sheet.

Notes:

1. All "Hoops" are "ultimate" butt spliced continuous.
2. For "Section C-C" see "Pier 2 & 6 Details" sheet for "Detail A" see "Bent Details" sheet.

∞ - Indicates bundled bars.

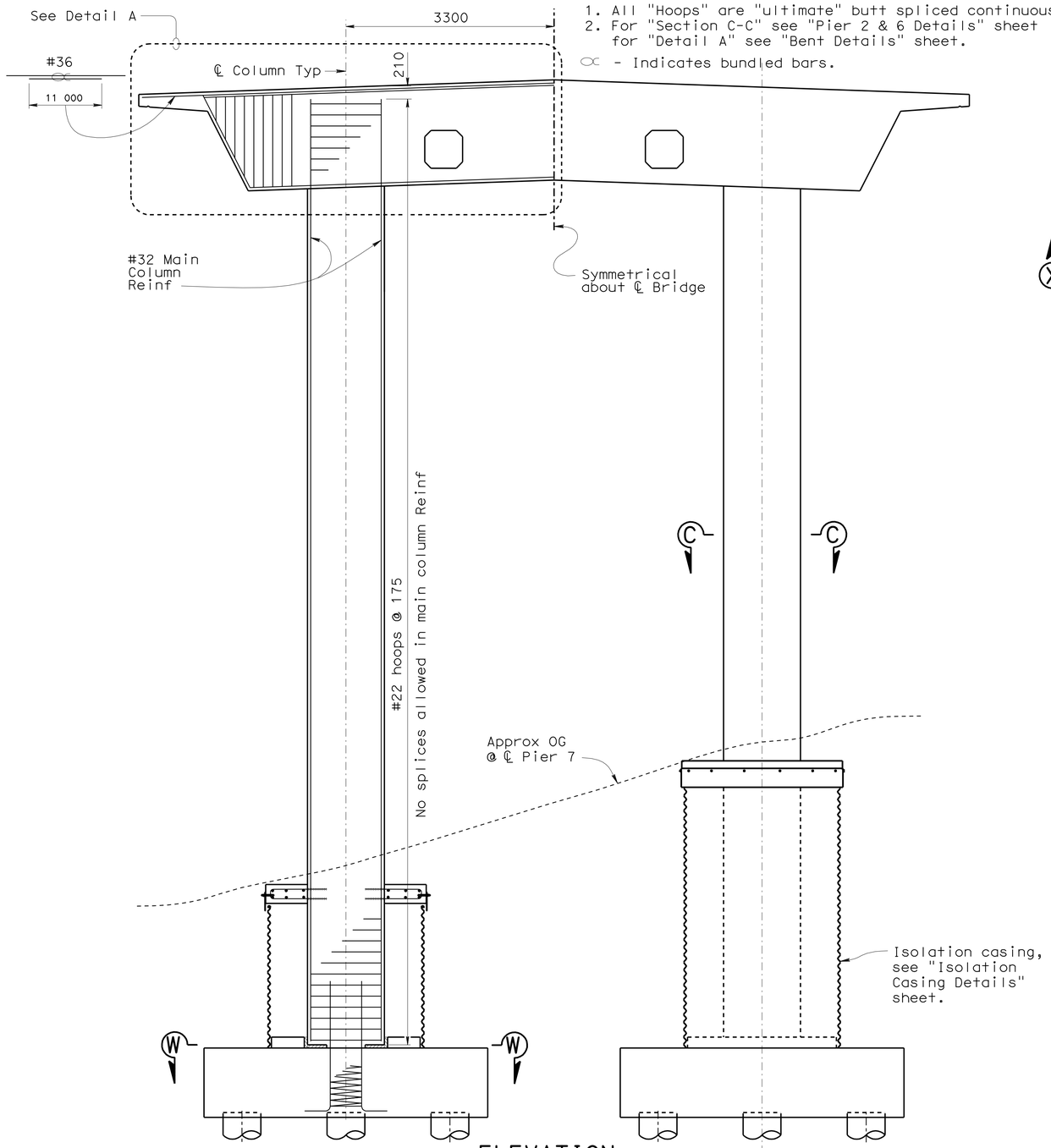

ELEVATION
1:40

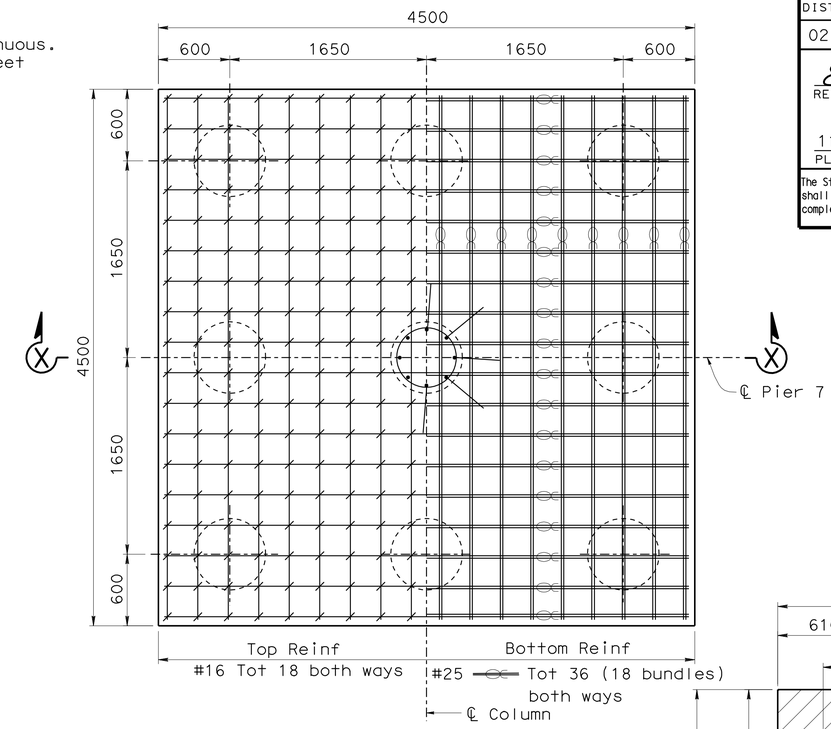

FOOTING PLAN
1:25

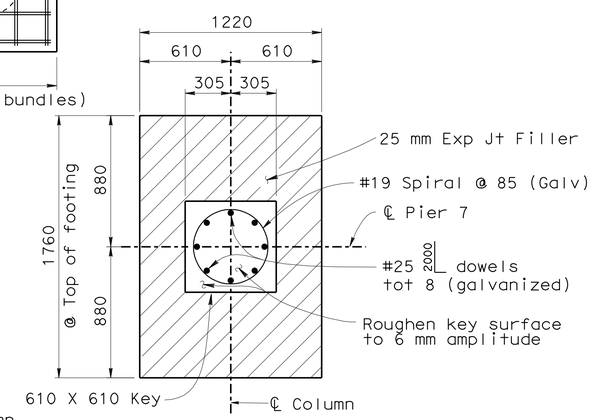

SECTION W-W
1:20

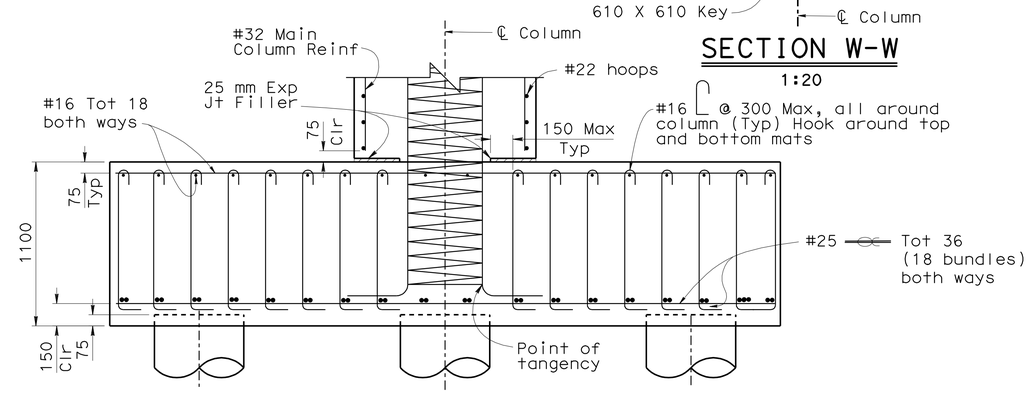

SECTION X-X
1:20

DESIGN	BY Eric Watson	CHECKED Kevin Harper/D. Sessions	
DETAILS	BY Bob Huddleston/JZ/GS	CHECKED Kevin Harper/D. Sessions	
QUANTITIES	BY Daniel Sessions	CHECKED Greg Jones	

STATE OF CALIFORNIA
DEPARTMENT OF TRANSPORTATION

DIVISION OF ENGINEERING SERVICES
STRUCTURE DESIGN
DESIGN BRANCH 1

BRIDGE NO. 09-0077
KILOMETER POST 56.8

SPANISH CREEK BRIDGE (REPLACE)
PIER 7 DETAILS

Caltrans Metric

ALL DIMENSIONS ARE IN MILLIMETERS UNLESS OTHERWISE SHOWN

ORIGINAL SCALE IN MILLIMETERS FOR REDUCED PLANS 0 10 20 30 40 50 60 70 80 90 100

CU 02
EA 373101

DISREGARD PRINTS BEARING EARLIER REVISION DATES

REVISION DATES: 6-18-06 9/25/09 10/07/09 06-21-01 05/19/09 06/22/09 09/08/09 09/16/09 09/21/09

SHEET 11 OF 55

FILE => 09-0077-g-b01dt01.dgn

STRUCTURES DESIGN DETAIL SHEET (METRIC) (REV.03-17-04)

USERNAME => trmikest DATE PLOTTED => 10-NOV-2009 TIME PLOTTED => 07:23

DIST	COUNTY	ROUTE	KILOMETER POST TOTAL PROJECT	SHEET No	TOTAL SHEETS
02	Plu	70	56.5/57.2	99	149

Eric Watson 10/23/09
REGISTERED CIVIL ENGINEER DATE

11-2-09
PLANS APPROVAL DATE

REGISTERED PROFESSIONAL ENGINEER Eric Watson No. 64273 Exp. 6-30-11 CIVIL STATE OF CALIFORNIA

The State of California or its officers or agents shall not be responsible for the accuracy or completeness of electronic copies of this plan sheet.

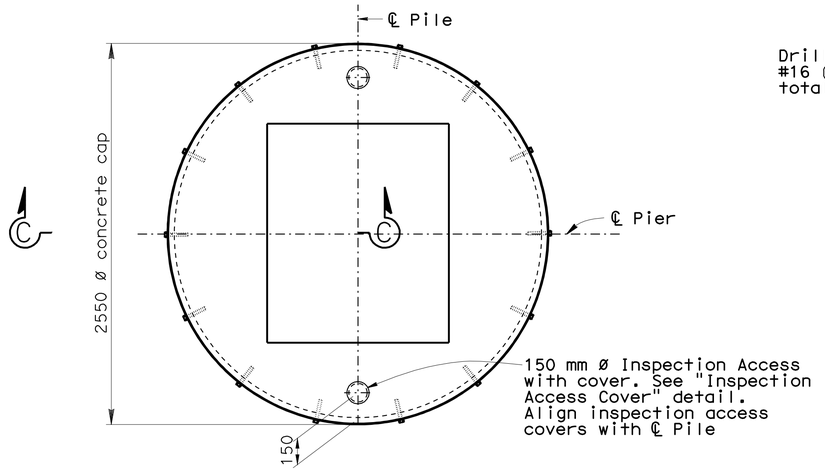

PLAN OF CONCRETE CAP
1:20

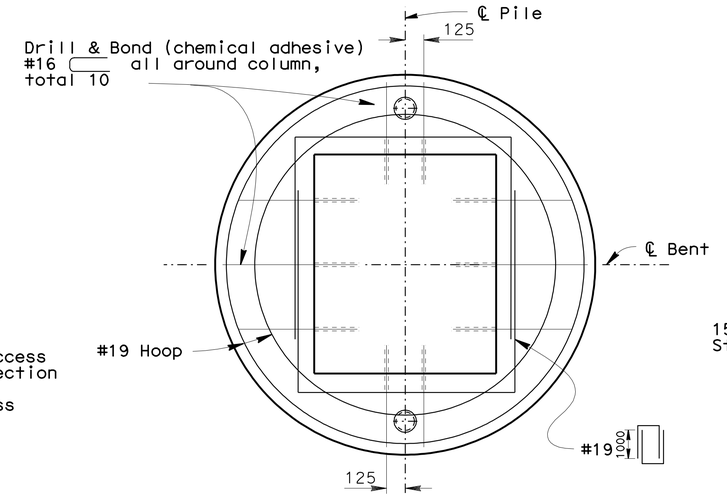

SECTION A-A
1:20

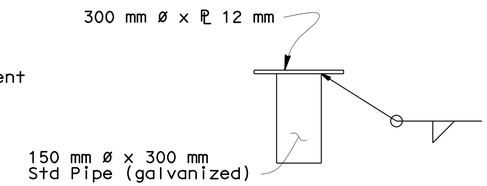

INSPECTION ACCESS COVER
1:10

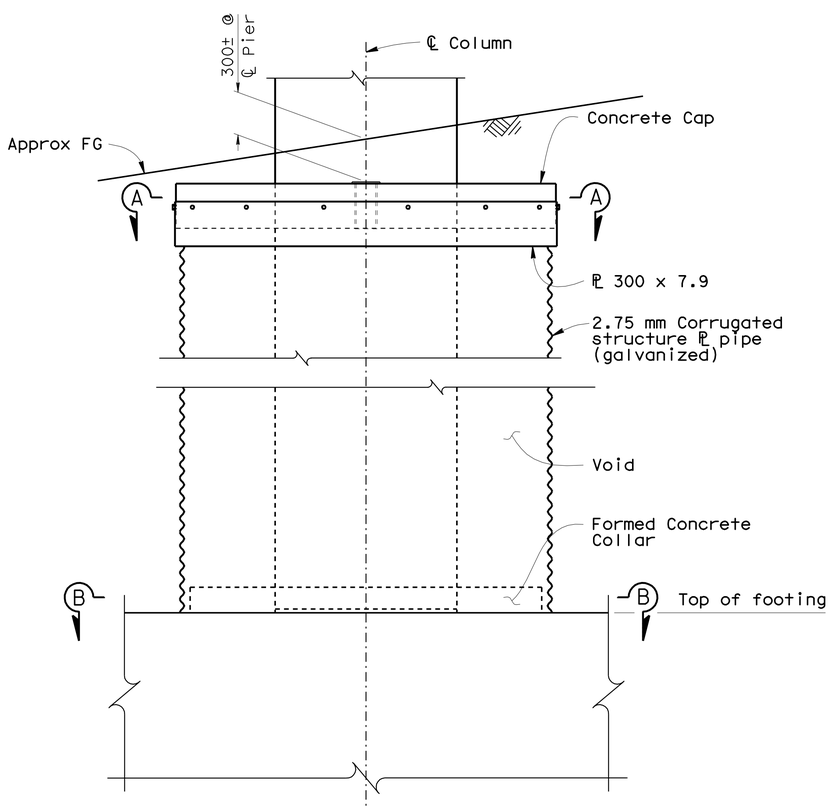

ELEVATION
1:20

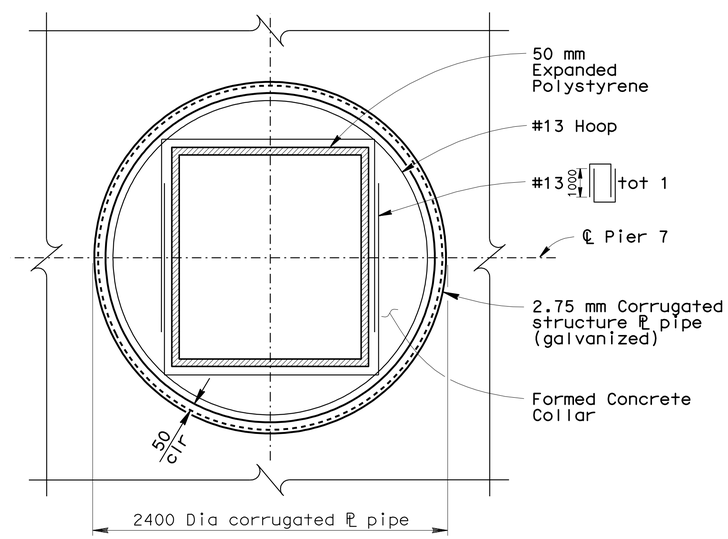

SECTION B-B
1:20

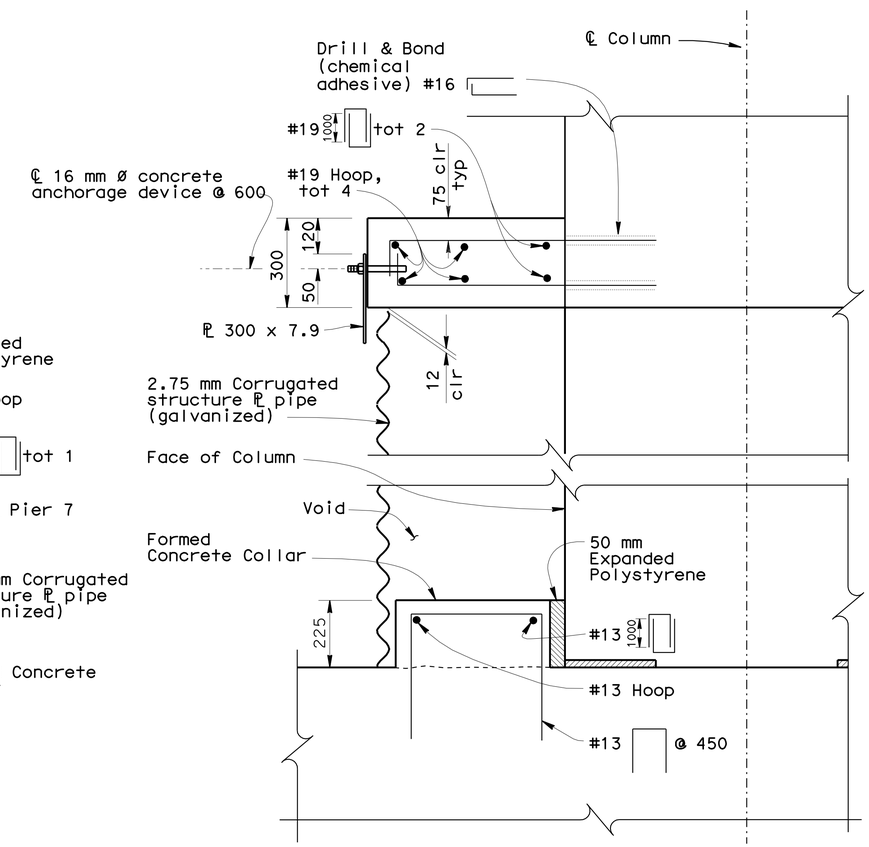

SECTION C-C
1:10

Note:
For details not shown see "Pier 7 Details" sheet

DESIGN	BY Eric Watson	CHECKED Kevin Harper/D. Sessions	
DETAILS	BY G. M. Souza	CHECKED Kevin Harper/D. Sessions	
QUANTITIES	BY Daniel Sessions	CHECKED Greg Jones	

STATE OF CALIFORNIA
DEPARTMENT OF TRANSPORTATION

DIVISION OF ENGINEERING SERVICES
STRUCTURE DESIGN
DESIGN BRANCH 1

BRIDGE NO. 09-0077
KILOMETER POST 56.8

SPANISH CREEK BRIDGE (REPLACE)
ISOLATION CASING DETAILS

Caltrans Metric

ALL DIMENSIONS ARE IN MILLIMETERS UNLESS OTHERWISE SHOWN

ORIGINAL SCALE IN MILLIMETERS FOR REDUCED PLANS 0 10 20 30 40 50 60 70 80 90 100

CU 02
EA 373101

DISREGARD PRINTS BEARING EARLIER REVISION DATES

REVISION DATES: 09-11-09 9/25/09 10/01/09 10/23/09

SHEET 12 OF 55

FILE => 09-0077-g-b02dt01.dgn

STRUCTURES DESIGN DETAIL SHEET (METRIC) (REV.03-17-04)

USERNAME => tmikesl DATE PLOTTED => 10-NOV-2009 TIME PLOTTED => 07:23

DIST	COUNTY	ROUTE	KILOMETER POST TOTAL PROJECT	SHEET No	TOTAL SHEETS
02	Plu	70	56.5/57.2	100	149

Eric Watson 10/23/09
REGISTERED CIVIL ENGINEER DATE

11-2-09
PLANS APPROVAL DATE

REGISTERED PROFESSIONAL ENGINEER Eric Watson No. 64273 Exp. 6-30-11 CIVIL STATE OF CALIFORNIA

The State of California or its officers or agents shall not be responsible for the accuracy or completeness of electronic copies of this plan sheet.

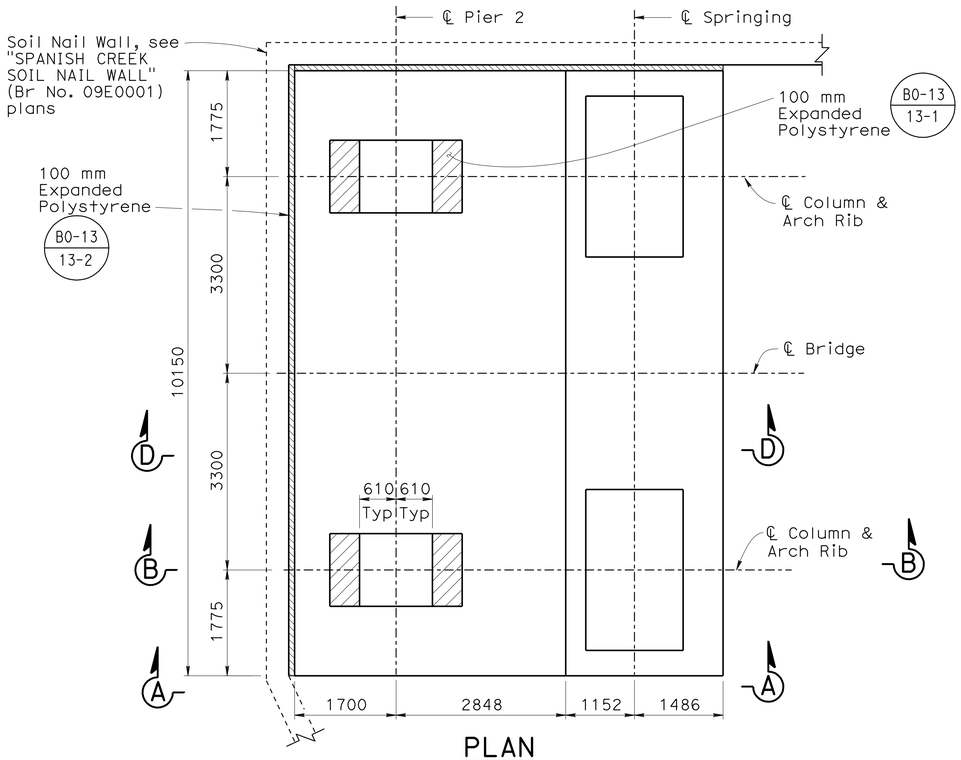

PLAN
1:50

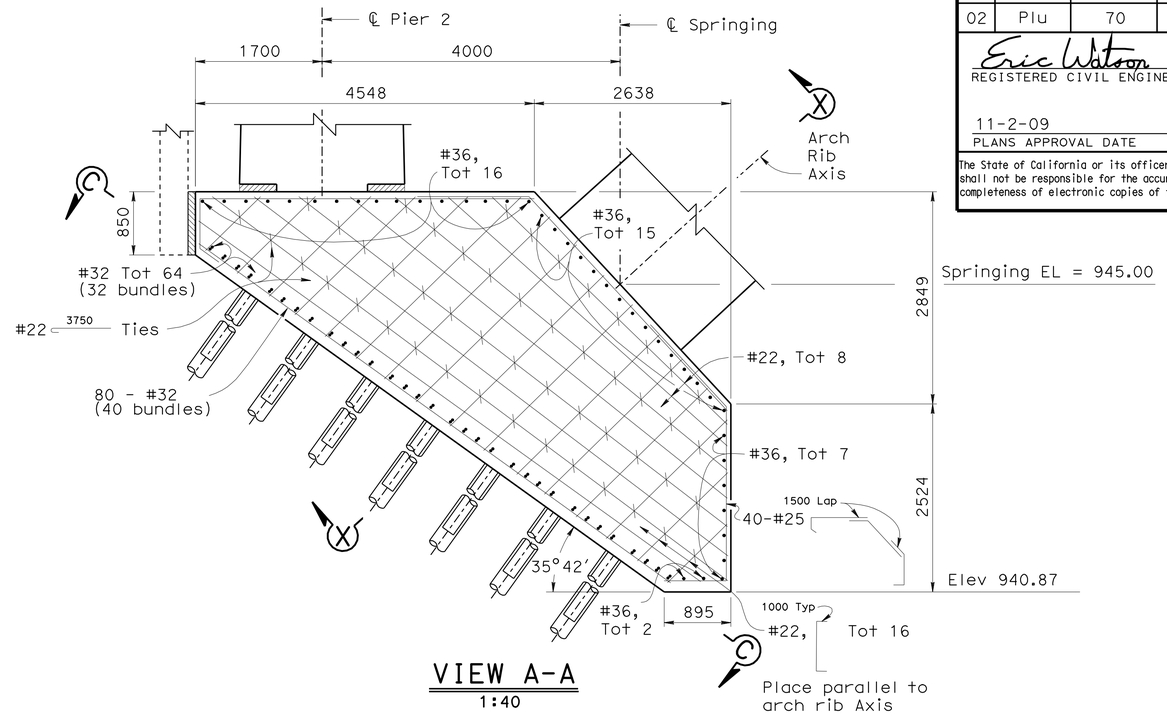

VIEW A-A
1:40

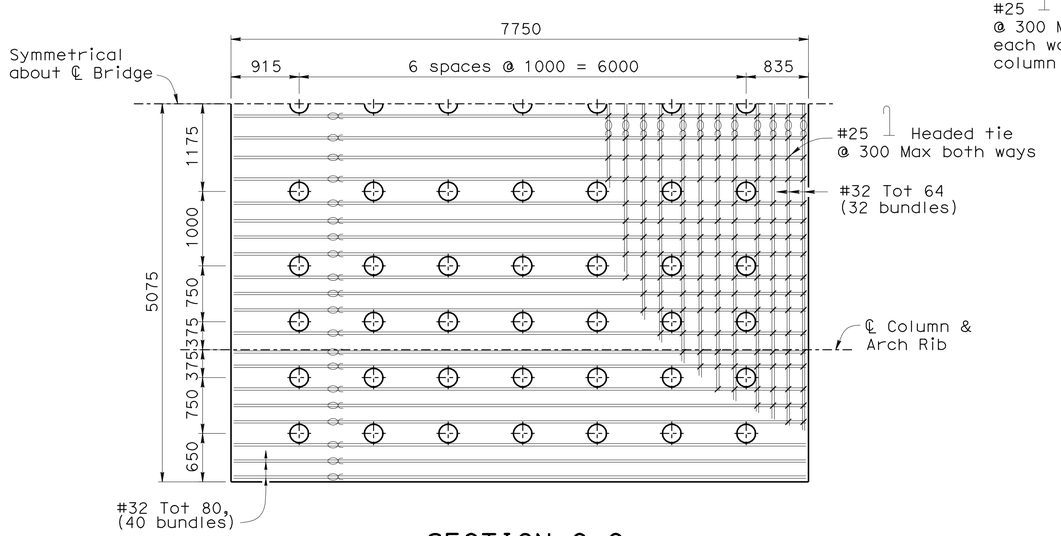

⊕ - Indicates Micropiles

SECTION C-C
1:40

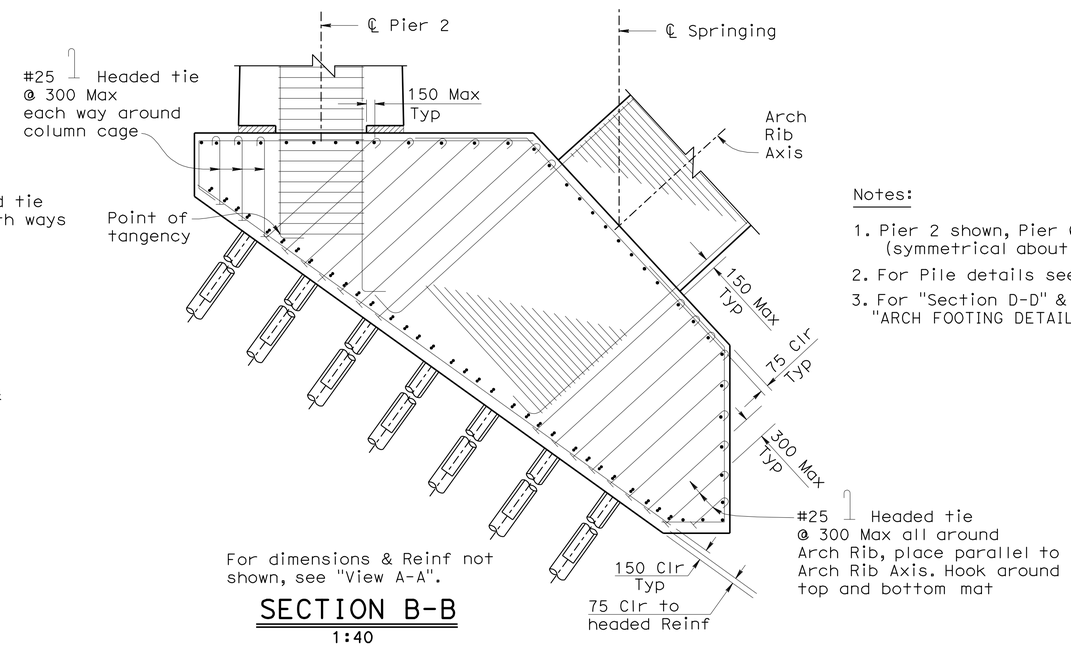

SECTION B-B
1:40

Notes:

1. Pier 2 shown, Pier 6 similar (symmetrical about ℄ Spandrel Bent 4).
2. For Pile details see "MICRO PILE DETAILS" sheet.
3. For "Section D-D" & "Section X-X ", see "ARCH FOOTING DETAILS NO. 2" sheet.

Caltrans Metric

	BY	CHECKED
DESIGN	Eric Watson	Kevin Harper
DETAILS	Bob Huddleston/JZ/JT	Kevin Harper
QUANTITIES	Daniel Sessions	Greg Thornton

STATE OF CALIFORNIA
DEPARTMENT OF TRANSPORTATION

DIVISION OF ENGINEERING SERVICES
STRUCTURE DESIGN
DESIGN BRANCH 1

BRIDGE NO. 09-0077
KILOMETER POST 56.8

SPANISH CREEK BRIDGE (REPLACE)
ARCH FOOTING DETAILS NO. 1

ALL DIMENSIONS ARE IN MILLIMETERS UNLESS OTHERWISE SHOWN

ORIGINAL SCALE IN MILLIMETERS FOR REDUCED PLANS 0 10 20 30 40 50 60 70 80 90 100

CU 02
EA 373101

DISREGARD PRINTS BEARING EARLIER REVISION DATES

REVISION DATES: 7-28-06 6/25/09 07/06/09 07/08/09 09/16/09 09/21/09 10/09/09 10/13/09 06/23/09

SHEET 13 OF 55

FILE => 09-0077-g-p01fdt02.dgn

STRUCTURES DESIGN DETAIL SHEET (METRIC) (REV.03-17-04)

USERNAME => ttmikes1 DATE PLOTTED => 10-NOV-2009 TIME PLOTTED => 07:23

DIST	COUNTY	ROUTE	KILOMETER POST TOTAL PROJECT	SHEET No	TOTAL SHEETS
02	Plu	70	56.5/57.2	101	149

Eric Watson 10/23/09
REGISTERED CIVIL ENGINEER DATE

11-2-09
PLANS APPROVAL DATE

REGISTERED PROFESSIONAL ENGINEER
Eric Watson
No. 64273
Exp. 6-30-11
CIVIL
STATE OF CALIFORNIA

The State of California or its officers or agents shall not be responsible for the accuracy or completeness of electronic copies of this plan sheet.

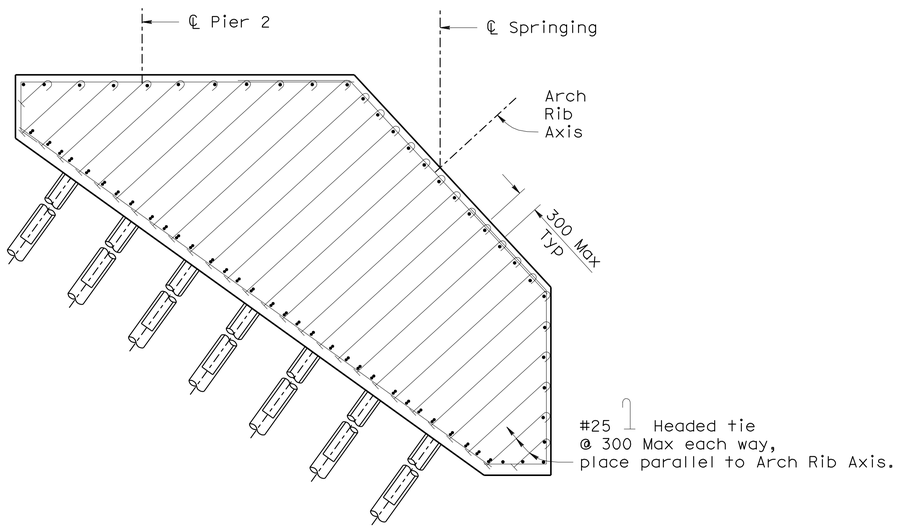

SECTION D-D
1:40

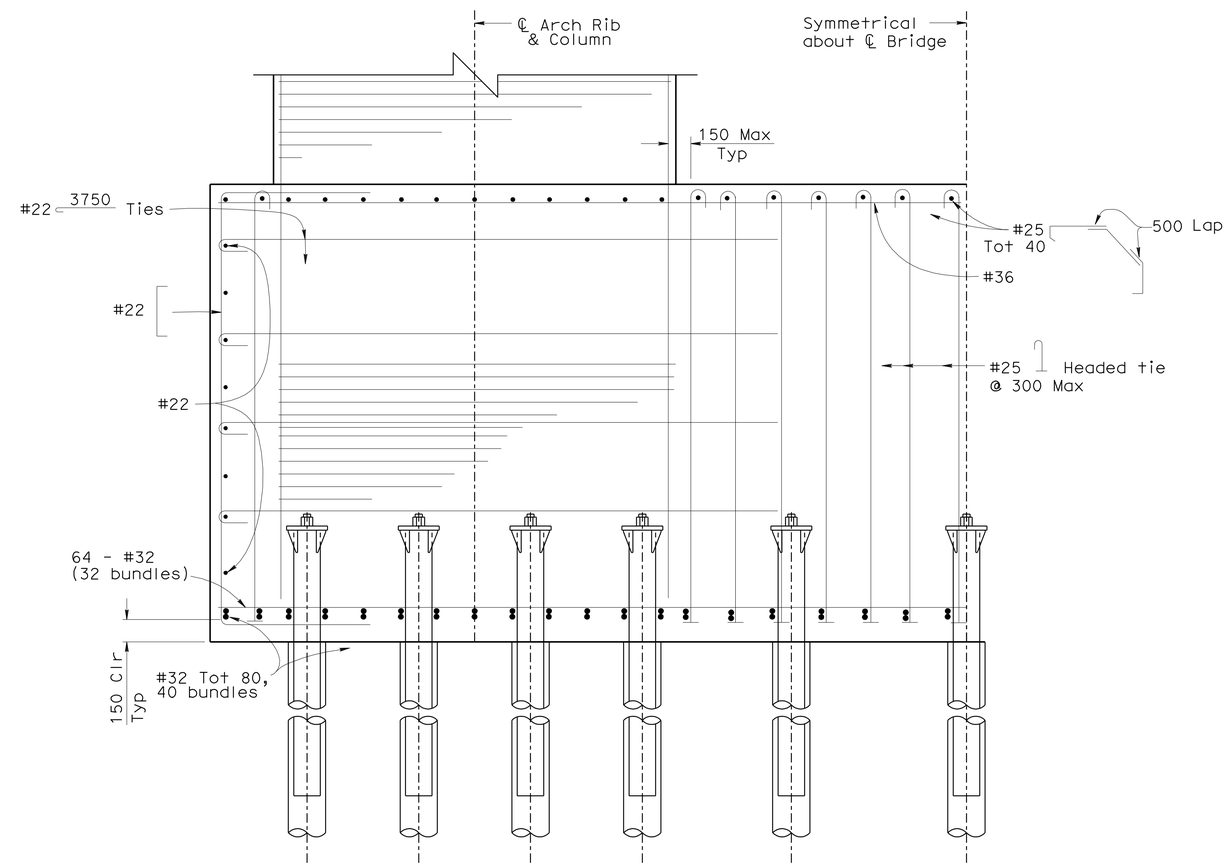

SECTION X-X
1:20

DESIGN	BY Eric Watson	CHECKED Kevin Harper	
DETAILS	BY Jie Tang	CHECKED Kevin Harper	
QUANTITIES	BY Daniel Sessions	CHECKED Greg Thornton	

STATE OF CALIFORNIA
DEPARTMENT OF TRANSPORTATION

DIVISION OF ENGINEERING SERVICES
STRUCTURE DESIGN
DESIGN BRANCH 1

BRIDGE NO. 09-0077
KILOMETER POST 56.8

SPANISH CREEK BRIDGE (REPLACE)
ARCH FOOTING DETAILS NO. 2

Caltrans Metric

ALL DIMENSIONS ARE IN MILLIMETERS UNLESS OTHERWISE SHOWN

ORIGINAL SCALE IN MILLIMETERS FOR REDUCED PLANS 0 10 20 30 40 50 60 70 80 90 100

CU 02
EA 373101

DISREGARD PRINTS BEARING EARLIER REVISION DATES

REVISION DATES: 09/16/09 10/02/09 10/13/09

SHEET 14 OF 55

FILE => 09-0077-g-p01fdt03.dgn

STRUCTURES DESIGN DETAIL SHEET (METRIC) (REV.03-17-04)

USERNAME => trmikes! DATE PLOTTED => 10-NOV-2009 TIME PLOTTED => 07:24

DIST	COUNTY	ROUTE	KILOMETER POST TOTAL PROJECT	SHEET No	TOTAL SHEETS
02	Plu	70	56.5/57.2	102	149

Eric Watson 10/23/09
REGISTERED CIVIL ENGINEER DATE

11-2-09
PLANS APPROVAL DATE

REGISTERED PROFESSIONAL ENGINEER
Eric Watson
No. 64273
Exp. 6-30-11
CIVIL
STATE OF CALIFORNIA

The State of California or its officers or agents shall not be responsible for the accuracy or completeness of electronic copies of this plan sheet.

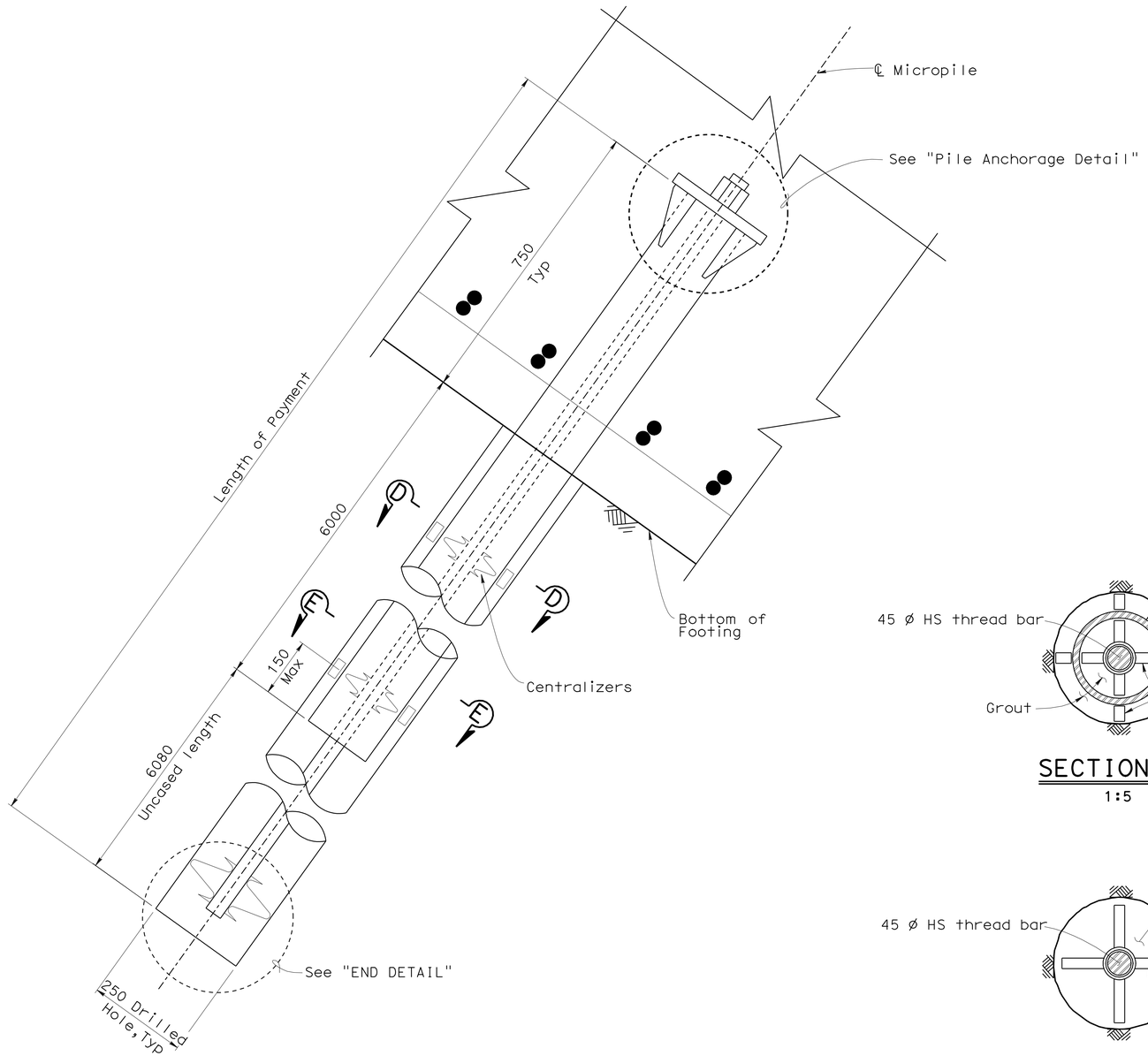

PILE DETAIL
1:10

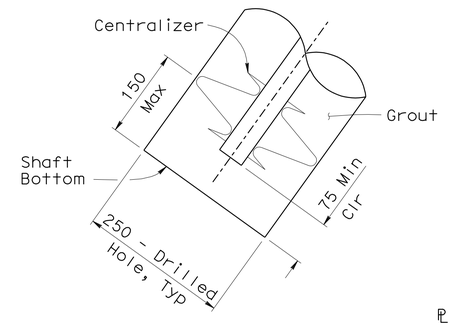

END DETAIL
1:5

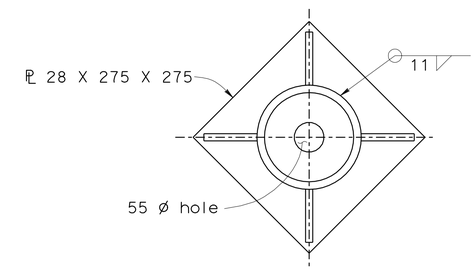

SECTION F-F
1:5

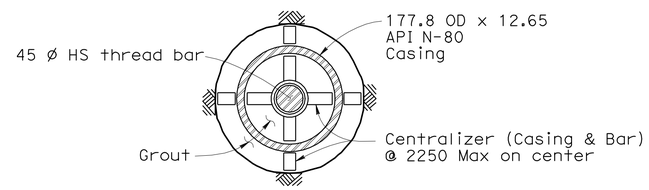

SECTION D-D
1:5

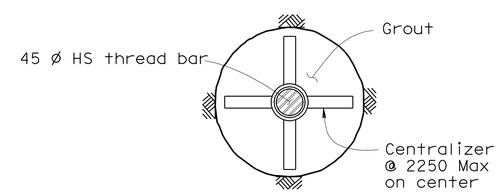

SECTION E-E
1:5

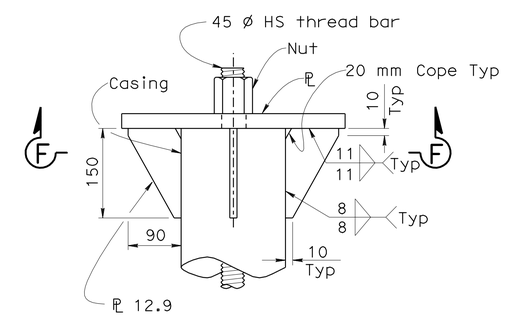

Note :
Casing shall be completely filled to bottom of bearing plate with grout.

PILE ANCHORAGE
1:5

Caltrans Metric

	BY	CHECKED
DESIGN	Eric Watson	Kevin Harper
DETAILS	Jie Tang	Kevin Harper
QUANTITIES	Daniel Sessions	Greg Thornton

STATE OF CALIFORNIA
DEPARTMENT OF TRANSPORTATION

DIVISION OF ENGINEERING SERVICES
STRUCTURE DESIGN
DESIGN BRANCH 1

BRIDGE NO. 09-0077
KILOMETER POST 56.8

SPANISH CREEK BRIDGE (REPLACE)
MICROPILE DETAILS

ALL DIMENSIONS ARE IN MILLIMETERS UNLESS OTHERWISE SHOWN

ORIGINAL SCALE IN MILLIMETERS FOR REDUCED PLANS 0 10 20 30 40 50 60 70 80 90 100

CU 02
EA 373101

DISREGARD PRINTS BEARING EARLIER REVISION DATES

REVISION DATES: 09/11/09 09/22/09 09/23/09 09/24/09 09/25/09 10/08/09 10/14/09 10/15/09

SHEET 15 OF 55

FILE => 09-0077-g-p01fdt04.dgn

STRUCTURES DESIGN DETAIL SHEET (METRIC) (REV.03-17-04)

USERNAME => trmikesl DATE PLOTTED => 10-NOV-2009 TIME PLOTTED => 07:24

DIST	COUNTY	ROUTE	KILOMETER POST TOTAL PROJECT	SHEET No	TOTAL SHEETS
02	Plu	70	56.5/57.2	103	149

Eric Watson 10/23/09
REGISTERED CIVIL ENGINEER DATE

11-2-09
PLANS APPROVAL DATE

REGISTERED PROFESSIONAL ENGINEER Eric Watson No. 64273 Exp. 6-30-11 CIVIL STATE OF CALIFORNIA

The State of California or its officers or agents shall not be responsible for the accuracy or completeness of electronic copies of this plan sheet.

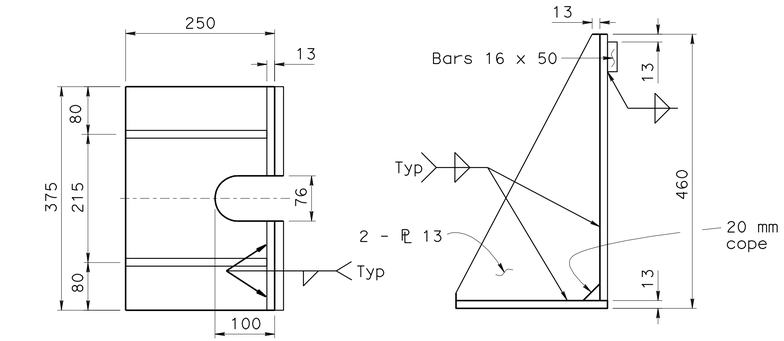

PLAN ELEVATION

BUTTRESS BRACKET DETAILS

1:5

Notes:

1. All plates and shapes are A572 Gr50 unless otherwise specified.
2. Buttress Brackets (tot 2) are required during erection of Reaction Beam. Temporarily attach Buttress Bracket with clamps to each Reaction Beam Flange.
3. All "Anchor Piles" and "Proof Test Piles" are Production Piles in the Arch Footings.
4. Proof Micropile testing consists of compression load testing.
5. The Engineer will provide instrumentation, jacks, load cells, and performs the load tests.
6. For Performance Micropile Load test details, see "Micropile Test Details No. 2" sheet

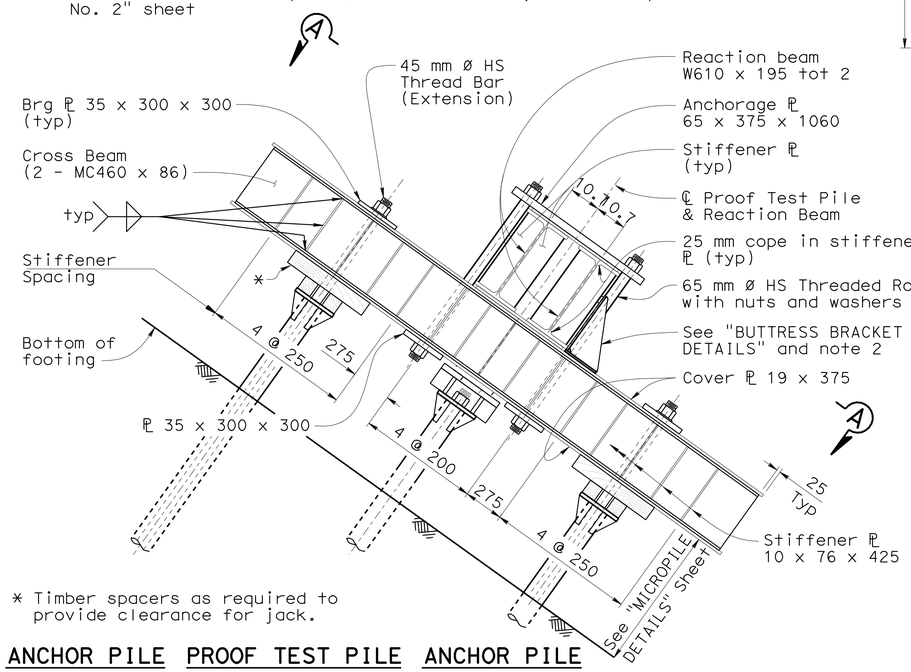

* Timber spacers as required to provide clearance for jack.

ANCHOR PILE PROOF TEST PILE ANCHOR PILE

ELEVATION - PROOF (COMPRESSION) TEST

1:20

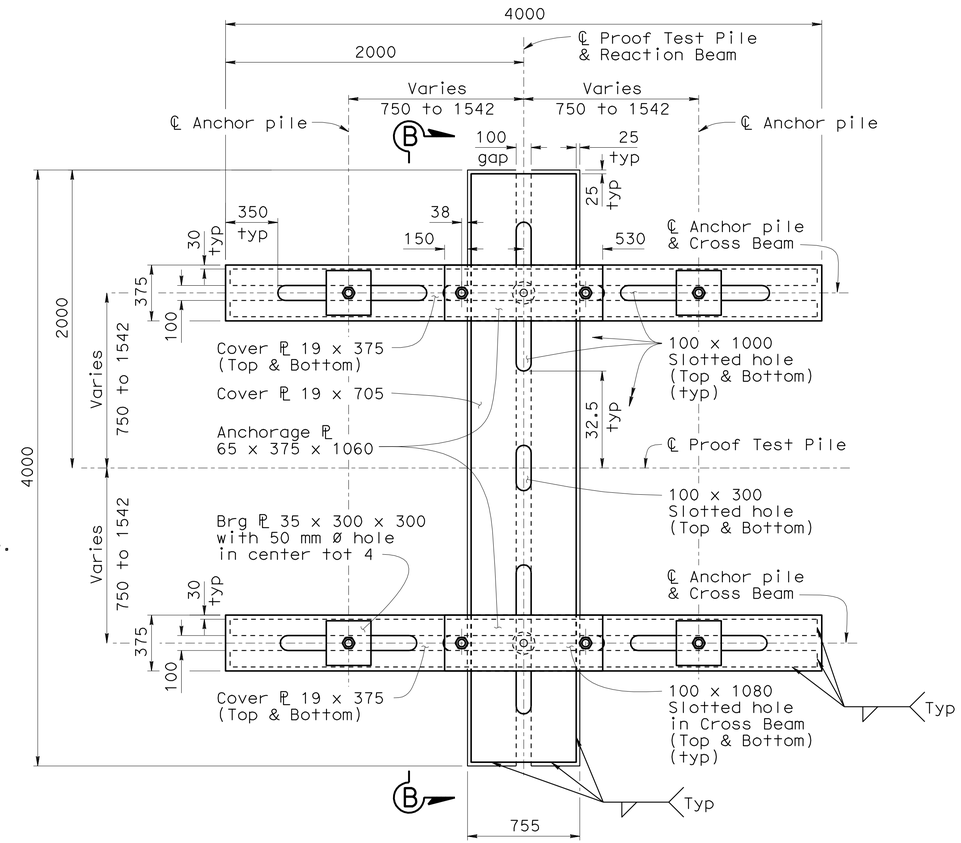

VIEW A-A

1:20

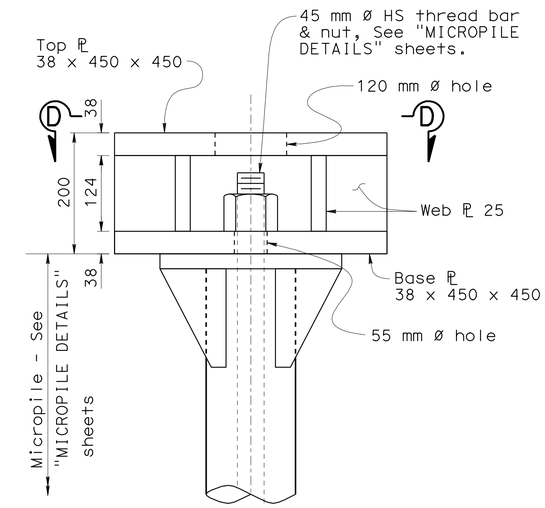

DETAIL C

1:5

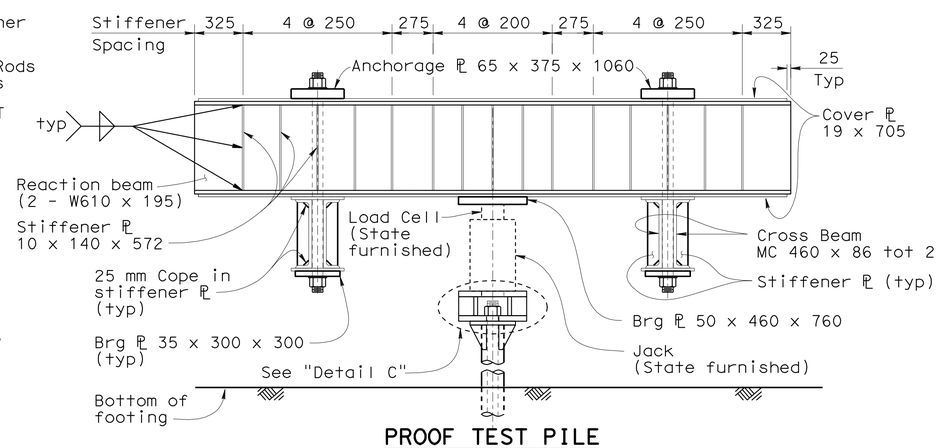

PROOF TEST PILE

SECTION B-B

1:20

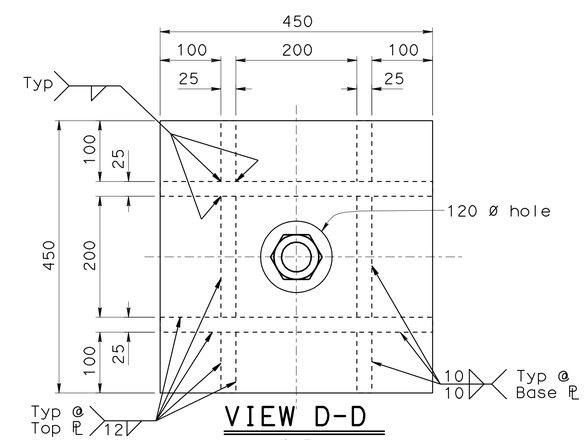

VIEW D-D

1:5

DESIGN	BY Kyoung Lee	CHECKED Kevin Harper	
DETAILS	BY Angela Chen/GMS	CHECKED Kevin Harper	
QUANTITIES	BY	CHECKED Greg Jones	

STATE OF CALIFORNIA DEPARTMENT OF TRANSPORTATION

DIVISION OF ENGINEERING SERVICES STRUCTURE DESIGN DESIGN BRANCH 1

BRIDGE NO. 09-0077
KILOMETER POST 56.8

SPANISH CREEK BRIDGE (REPLACE)
MICROPILE TEST DETAILS NO. 1

ALL DIMENSIONS ARE IN MILLIMETERS UNLESS OTHERWISE SHOWN

ORIGINAL SCALE IN MILLIMETERS FOR REDUCED PLANS 0 10 20 30 40 50 60 70 80 90 100

CU 02
EA 373101

DISREGARD PRINTS BEARING EARLIER REVISION DATES

REVISION DATES: 9-11-09 9-28-09 9-23-09 10/14/09 10/21/09

SHEET 16 OF 55

STRUCTURES DESIGN DETAIL SHEET (METRIC) (REV.03-17-04)

FILE => 09-0077-h-pltest_dt01.dgn

USERNAME => trmikest DATE PLOTTED => 10-NOV-2009 TIME PLOTTED => 07:24

DIST	COUNTY	ROUTE	KILOMETER POST TOTAL PROJECT	SHEET No	TOTAL SHEETS
02	Plu	70	56.5/57.2	104	149

Eric Watson 10/23/09
REGISTERED CIVIL ENGINEER DATE

11-2-09
PLANS APPROVAL DATE

REGISTERED PROFESSIONAL ENGINEER Eric Watson No. 64273 Exp. 6-30-11 CIVIL STATE OF CALIFORNIA

The State of California or its officers or agents shall not be responsible for the accuracy or completeness of electronic copies of this plan sheet.

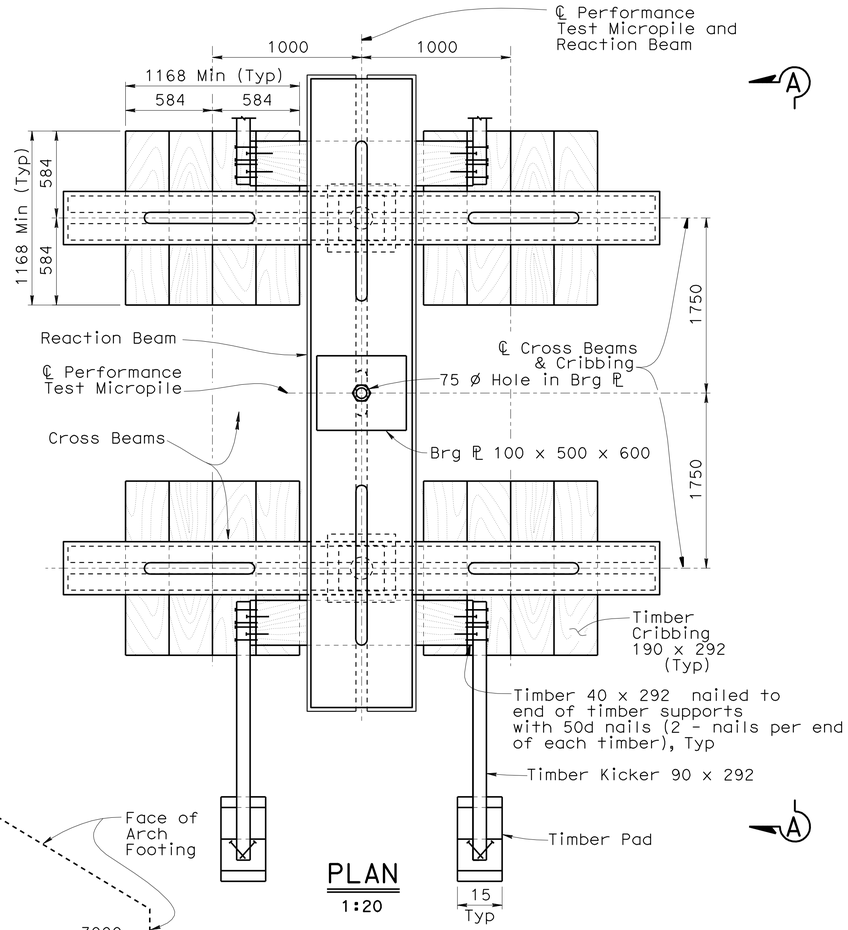

PLAN
1:20

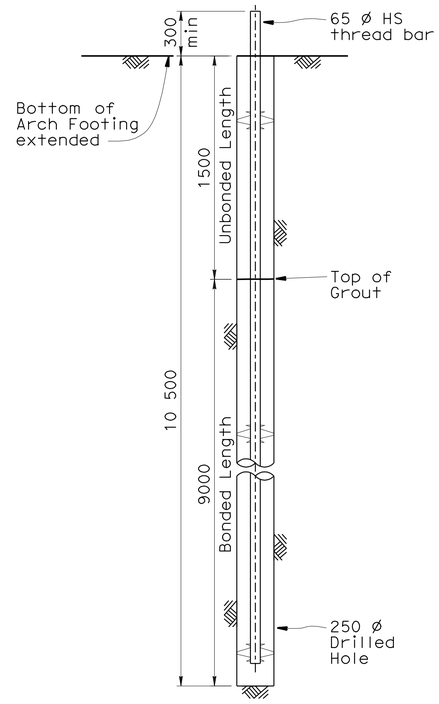

PERFORMANCE TEST MICROPILE
NO SCALE

Notes:

1. For Reaction Beam, Cross Beam and other details not shown, see "Micropile Test Details No. 1" sheet
2. Exact location of Performance Test Micropile to be determined by the Engineer
3. Load Cell, Jacks & Instrumentation will be furnished by the Engineer. Load Test will be performed by the Engineer
4. All timber shall be Douglas Fir No. 2 or better
5. Maximum soil bearing pressure under cribing = 430 kPa
6. The Tensile Nominal Resistance of the Performance Test Micropile is 2450 kN.

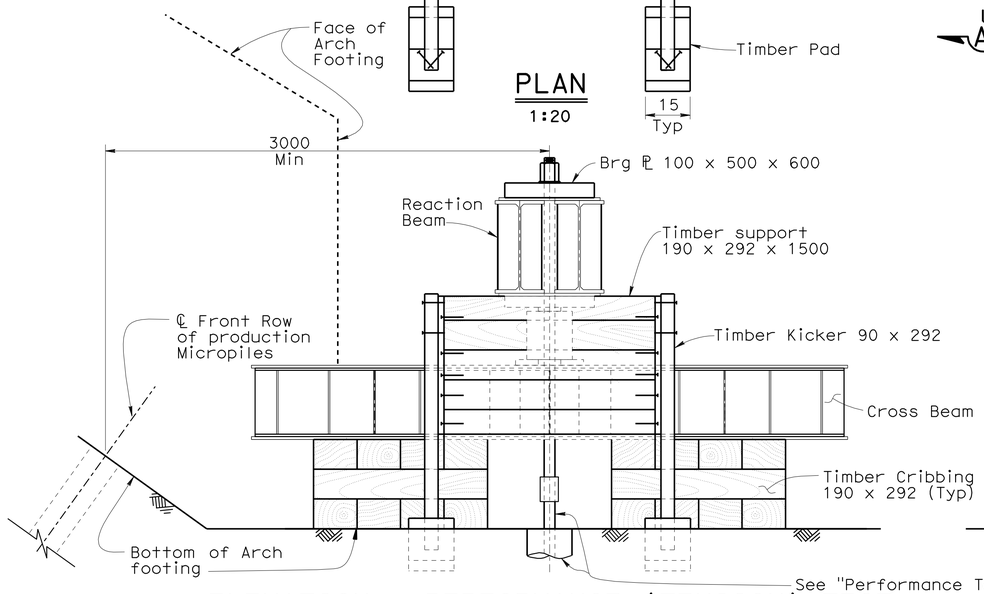

ELEVATION - PERFORMANCE (TENSION) TEST
1:20

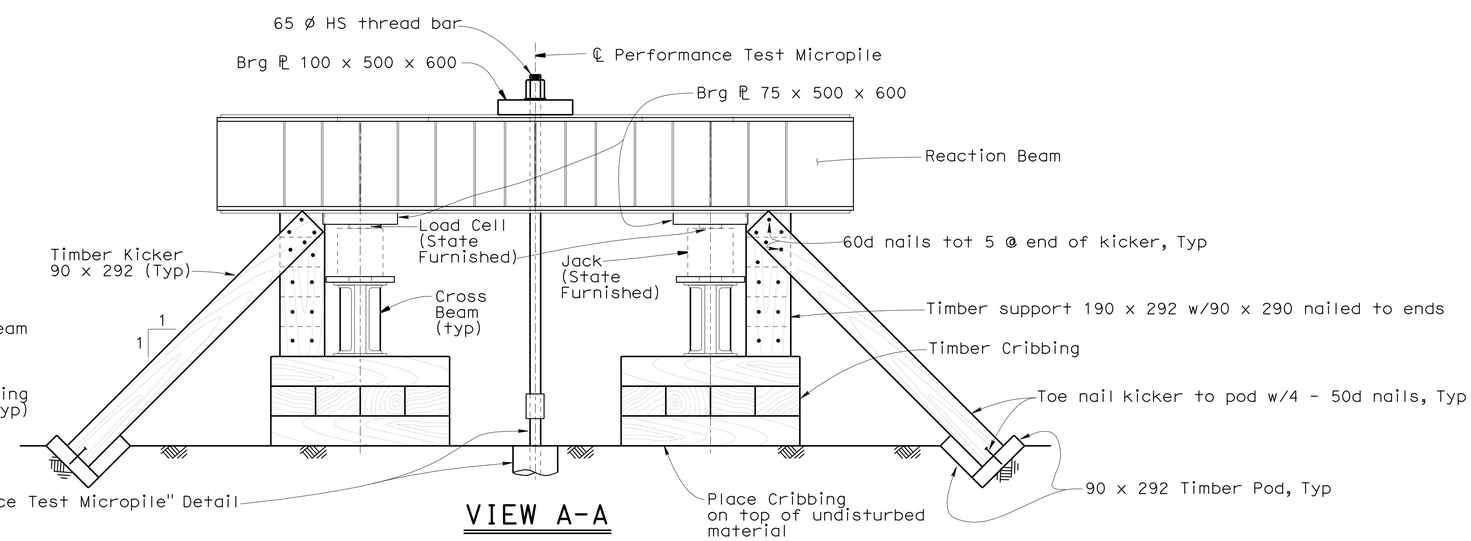

VIEW A-A
1:20

Caltrans Metric

	BY	CHECKED
DESIGN	K H Lee/E Watson	Kevin Harper
DETAILS	G Souza/J Zhou	Kevin Harper
QUANTITIES	Greg Thornton	Greg Jones

STATE OF CALIFORNIA
DEPARTMENT OF TRANSPORTATION

DIVISION OF ENGINEERING SERVICES
STRUCTURE DESIGN
DESIGN BRANCH 1

BRIDGE NO. 09-0077
KILOMETER POST 56.8

SPANISH CREEK BRIDGE (REPLACE)
MICROPILE TEST DETAILS No.2

ALL DIMENSIONS ARE IN MILLIMETERS UNLESS OTHERWISE SHOWN

ORIGINAL SCALE IN MILLIMETERS FOR REDUCED PLANS 0 10 20 30 40 50 60 70 80 90 100

CU 02
EA 373101

DISREGARD PRINTS BEARING EARLIER REVISION DATES

REVISION DATES: 9-11-09 9-22-09 9-23-09 10-13-09 10-15-09 10-19-09 10-20-09

SHEET 17 OF 55

FILE => 09-0077-h-pltest_dt02.dgn

STRUCTURES DESIGN DETAIL SHEET (METRIC) (REV.03-17-04)

USERNAME => trmikest DATE PLOTTED => 10-NOV-2009 TIME PLOTTED => 07:24

DIST	COUNTY	ROUTE	KILOMETER POST TOTAL PROJECT	SHEET No	TOTAL SHEETS
02	Plu	70	56.5/57.2	105	149

Eric Watson 10/23/09
REGISTERED CIVIL ENGINEER DATE

11-2-09
PLANS APPROVAL DATE

REGISTERED PROFESSIONAL ENGINEER Eric Watson No. 64273 Exp. 6-30-2011 CIVIL STATE OF CALIFORNIA

The State of California or its officers or agents shall not be responsible for the accuracy or completeness of electronic copies of this plan sheet.

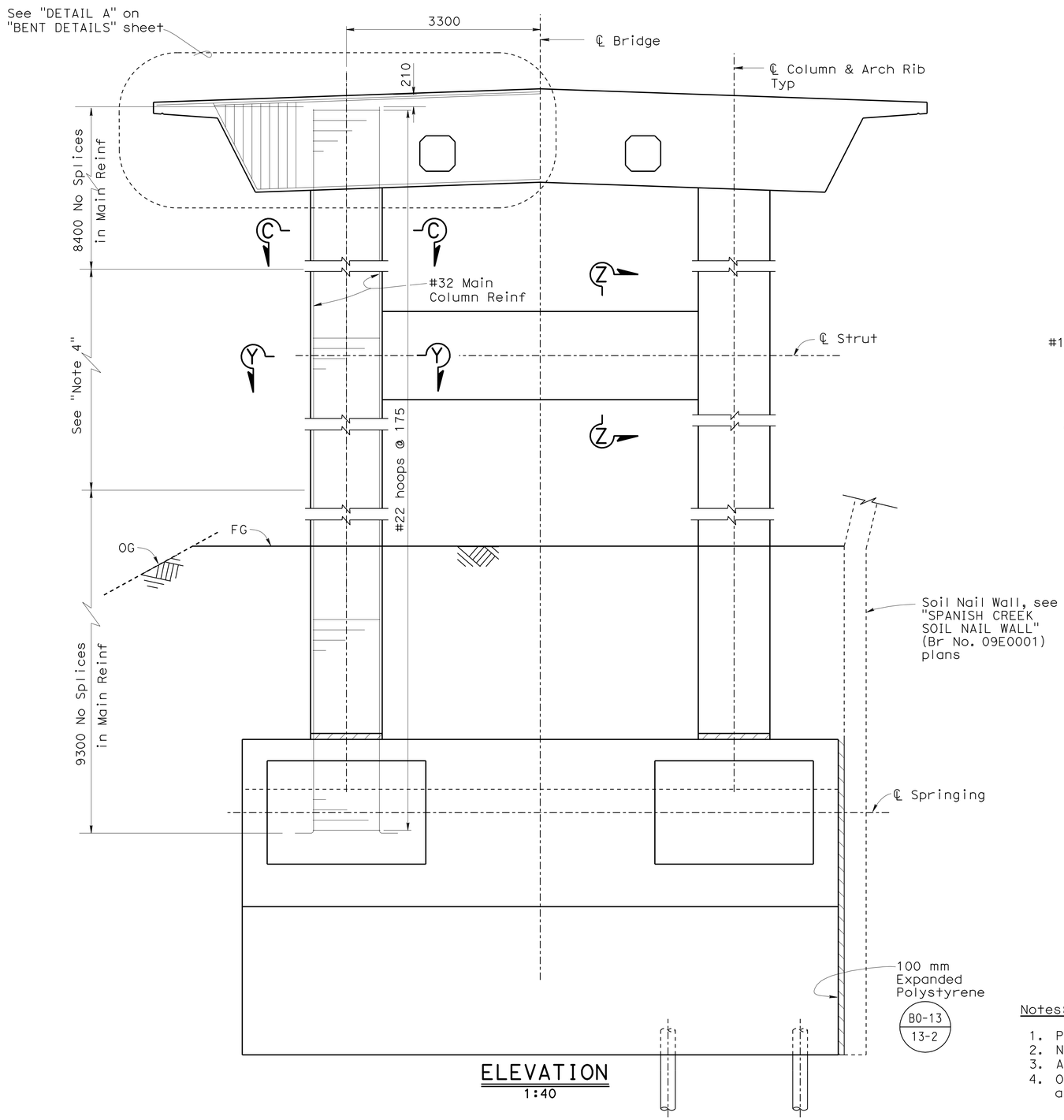

ELEVATION
1:40

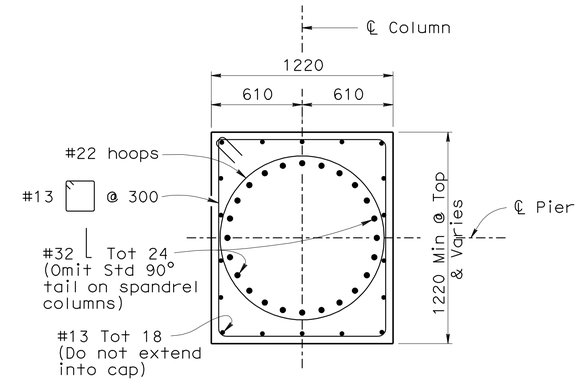

SECTION C-C
1:20

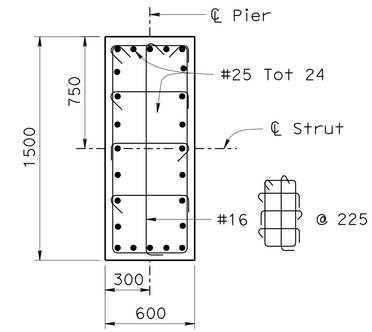

SECTION Z-Z
1:20

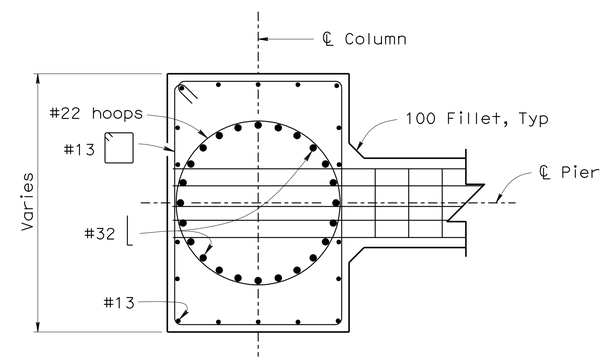

SECTION Y-Y
1:20

Notes:

1. Pier 2 shown, Pier 6 similar.
2. Not all piles shown.
3. All hoops are "Ultimate butt spliced" continuous.
4. Only staggered "Ultimate" butt splices are allowed in main column Reinf in this area

Caltrans Metric

	BY	CHECKED
DESIGN	Eric Watson	Kevin Harper
DETAILS	Bob Huddleston/J Tang	Kevin Harper
QUANTITIES	Mark Simonsen	Yihwin Huang

STATE OF CALIFORNIA
DEPARTMENT OF TRANSPORTATION

DIVISION OF ENGINEERING SERVICES
STRUCTURE DESIGN
DESIGN BRANCH 1

BRIDGE NO. 09-0077
KILOMETER POST 56.8

SPANISH CREEK BRIDGE (REPLACE)
PIERS 2 & 6 DETAILS

ALL DIMENSIONS ARE IN MILLIMETERS UNLESS OTHERWISE SHOWN

ORIGINAL SCALE IN MILLIMETERS FOR REDUCED PLANS 0 10 20 30 40 50 60 70 80 90 100

CU 03254
EA 373101

DISREGARD PRINTS BEARING EARLIER REVISION DATES

REVISION DATES: 08/21/09 09/23/09 10/08/09 10/12/09 10/15/09

SHEET 18 OF 55

FILE => 09-0077-j_p26dt01.dgn

STRUCTURES DESIGN DETAIL SHEET (METRIC) (REV.03-17-04)

USERNAME => trmikest DATE PLOTTED => 10-NOV-2009 TIME PLOTTED => 07:24

DIST	COUNTY	ROUTE	KILOMETER POST TOTAL PROJECT	SHEET No	TOTAL SHEETS
02	Plu	70	56.5/57.2	106	149

Eric Watson 10/23/09
REGISTERED CIVIL ENGINEER DATE

11-2-09
PLANS APPROVAL DATE

REGISTERED PROFESSIONAL ENGINEER Eric Watson No. 64273 Exp. 6-30-11 CIVIL STATE OF CALIFORNIA

The State of California or its officers or agents shall not be responsible for the accuracy or completeness of electronic copies of this plan sheet.

Note: Barrier Rail & Micropiles not shown

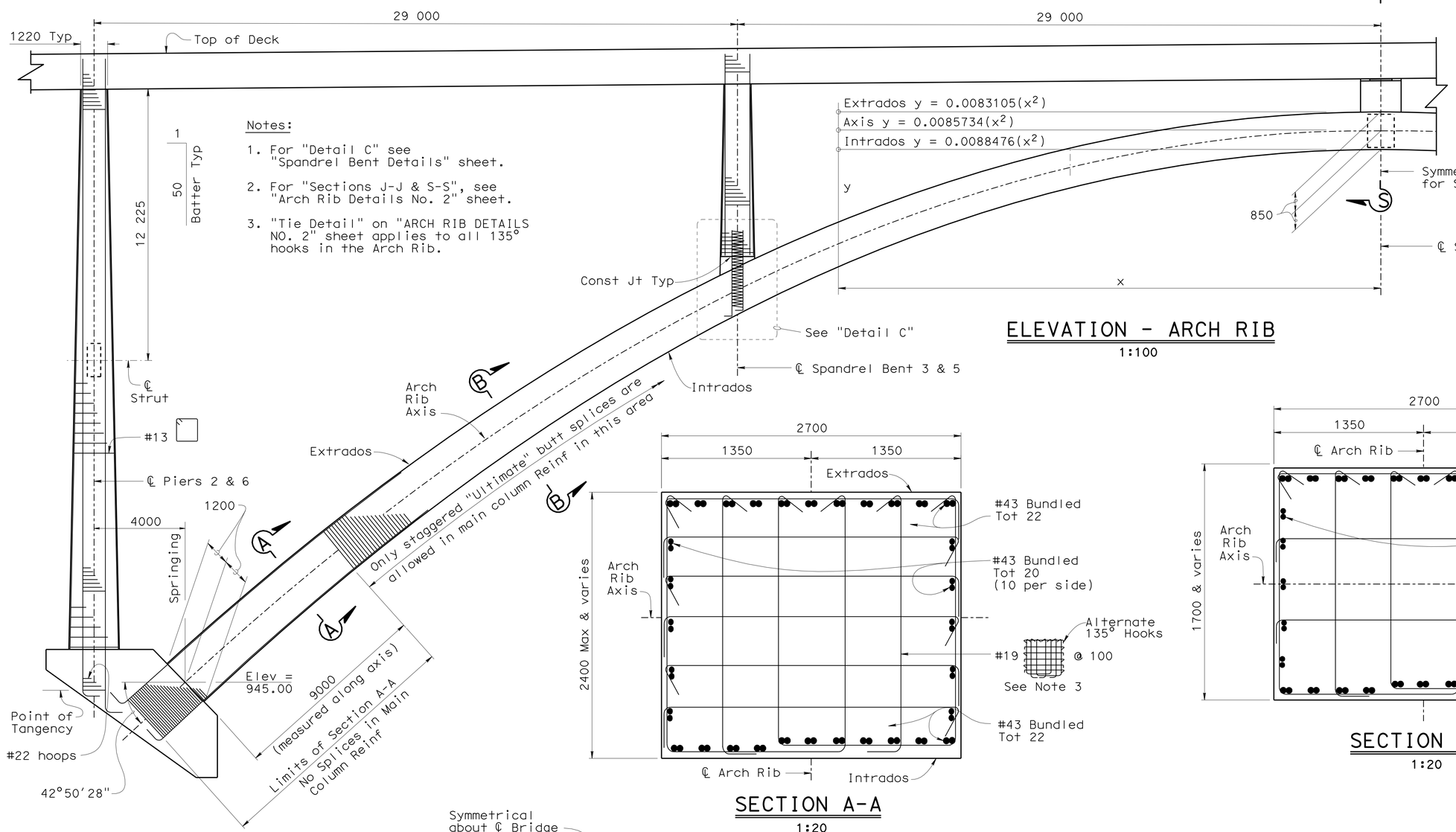

Notes:

1. For "Detail C" see "Spandrel Bent Details" sheet.
2. For "Sections J-J & S-S", see "Arch Rib Details No. 2" sheet.
3. "Tie Detail" on "ARCH RIB DETAILS NO. 2" sheet applies to all 135° hooks in the Arch Rib.

ELEVATION - ARCH RIB

1:100

SECTION A-A

1:20

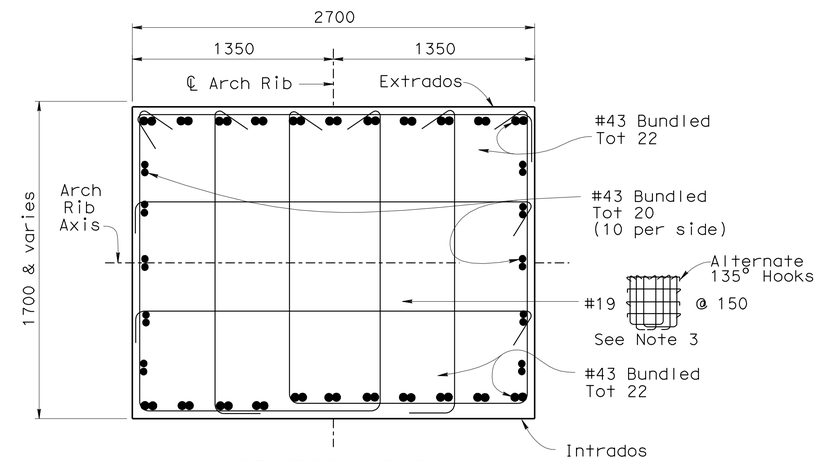

SECTION B-B

1:20

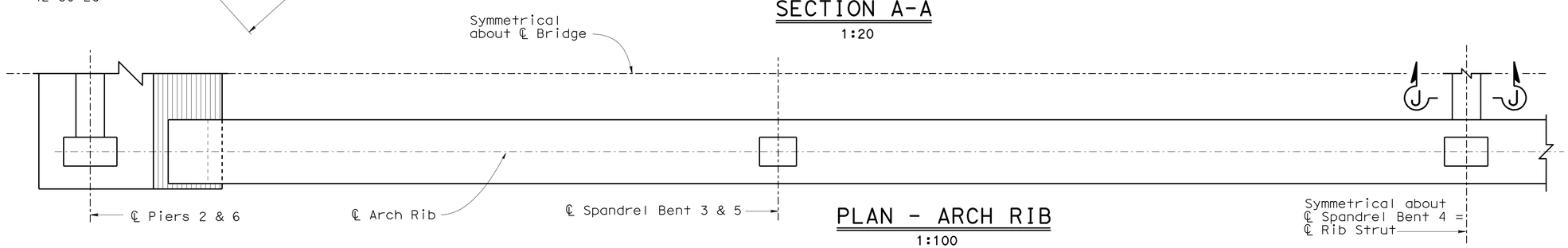

PLAN - ARCH RIB

1:100

Caltrans Metric

	BY	CHECKED
DESIGN	Eric Watson	Kevin Harper
DETAILS	Bob Huddleston/JZ	Kevin Harper
QUANTITIES	Mark Simonsen	Yihwin Huang

STATE OF CALIFORNIA
DEPARTMENT OF TRANSPORTATION

DIVISION OF ENGINEERING SERVICES
STRUCTURE DESIGN
DESIGN BRANCH 1

BRIDGE NO. 09-0077
KILOMETER POST 56.8

SPANISH CREEK BRIDGE (REPLACE)
ARCH RIB DETAILS NO. 1

ALL DIMENSIONS ARE IN MILLIMETERS UNLESS OTHERWISE SHOWN

ORIGINAL SCALE IN MILLIMETERS FOR REDUCED PLANS 0 10 20 30 40 50 60 70 80 90 100

CU 02
EA 373101

DISREGARD PRINTS BEARING EARLIER REVISION DATES

REVISION DATES: 7-26-06 6/25/09 9/15/09 9/21/09 9/28/09 9/29/09 9/29/09 10/06/09 10/12/09 10/14/09

SHEET 19 OF 55

FILE => 09-0077-j-ardt01.dgn

STRUCTURES DESIGN DETAIL SHEET (METRIC) (REV.03-17-04)

USERNAME => ttmirkes1 DATE PLOTTED => 10-NOV-2009 TIME PLOTTED => 07:25

DIST	COUNTY	ROUTE	KILOMETER POST TOTAL PROJECT	SHEET No	TOTAL SHEETS
02	Plu	70	56.5/57.2	107	149

Eric Watson 10/23/09
REGISTERED CIVIL ENGINEER DATE

11-2-09
PLANS APPROVAL DATE

REGISTERED PROFESSIONAL ENGINEER Eric Watson No. 64273 Exp. 6-30-2011 CIVIL STATE OF CALIFORNIA

The State of California or its officers or agents shall not be responsible for the accuracy or completeness of electronic copies of this plan sheet.

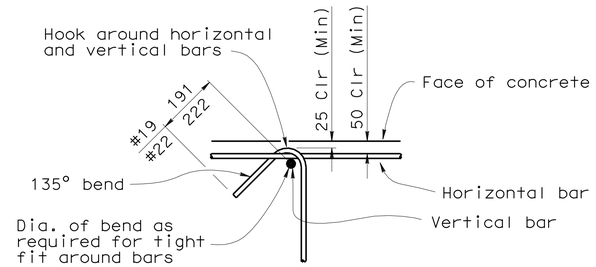

TIE DETAIL

NO SCALE

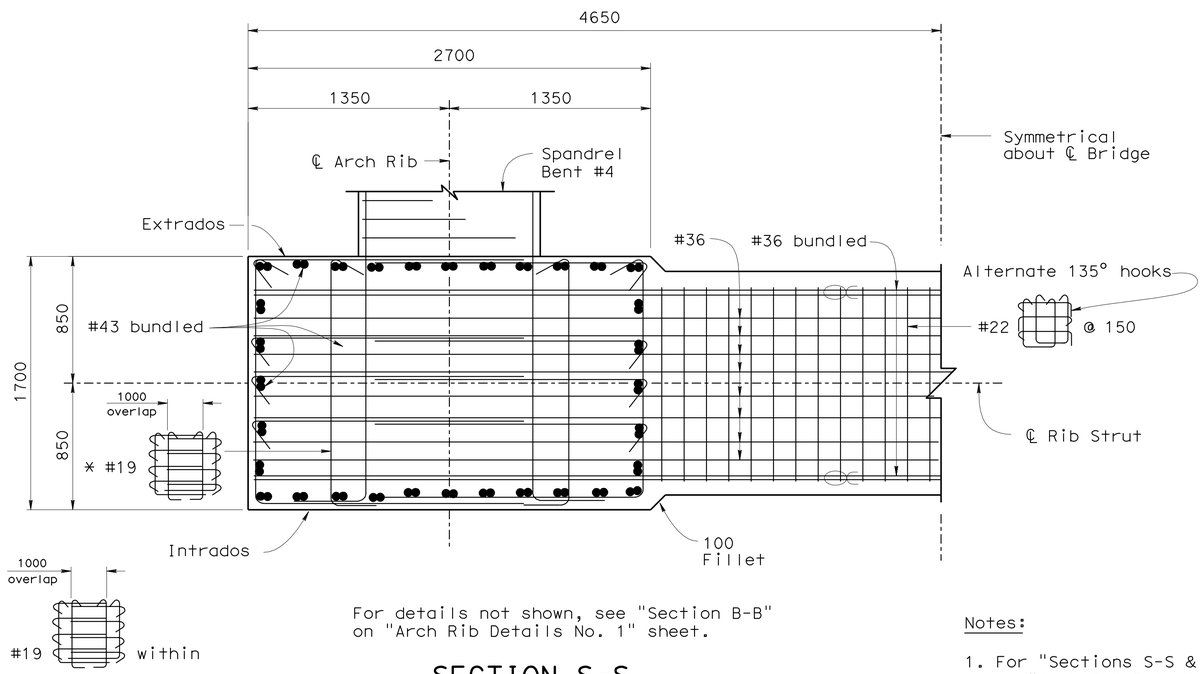

For details not shown, see "Section B-B" on "Arch Rib Details No. 1" sheet.

SECTION S-S

1:20

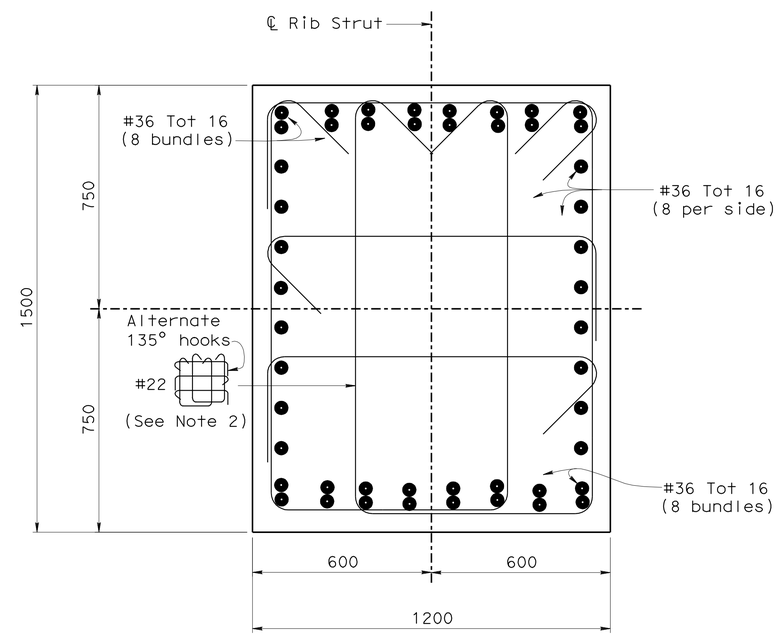

SECTION J-J

1:10

Notes:

1. For "Sections S-S & J-J" location, see"Arch Rib Details No. 1" sheet.
2. Tie Detail applies to all 135° hooks in the Arch Rib and Strut.

⌒ - Indicates bundled bars

DESIGN	BY Eric Watson	CHECKED Kevin Harper	
DETAILS	BY Bob Huddleston	CHECKED Kevin Harper	
QUANTITIES	BY Mark Simonsen	CHECKED Yihwin Huang	

STATE OF CALIFORNIA
DEPARTMENT OF TRANSPORTATION

DIVISION OF ENGINEERING SERVICES
STRUCTURE DESIGN
DESIGN BRANCH 1

BRIDGE NO. 09-0077
KILOMETER POST 56.8

SPANISH CREEK BRIDGE (REPLACE)
ARCH RIB DETAILS NO. 2

Caltrans Metric

ALL DIMENSIONS ARE IN MILLIMETERS UNLESS OTHERWISE SHOWN

ORIGINAL SCALE IN MILLIMETERS FOR REDUCED PLANS 0 10 20 30 40 50 60 70 80 90 100

CU 03254
EA 373101

DISREGARD PRINTS BEARING EARLIER REVISION DATES

REVISION DATES: 9/24/09 9/24/09 9/24/09 9/25/09 10/15/09

SHEET 20 OF 55

FILE => 09-0077-k-ardt02.dgn

STRUCTURES DESIGN DETAIL SHEET (METRIC) (REV.03-17-04)

USERNAME => trmikest DATE PLOTTED => 10-NOV-2009 TIME PLOTTED => 07:25

DIST	COUNTY	ROUTE	KILOMETER POST TOTAL PROJECT	SHEET No	TOTAL SHEETS
02	Plu	70	56.5/57.2	108	149

Eric Watson 10/23/09
REGISTERED CIVIL ENGINEER DATE

11-2-09
PLANS APPROVAL DATE

REGISTERED PROFESSIONAL ENGINEER Eric Watson No. 64273 Exp. 6-30-11 CIVIL STATE OF CALIFORNIA

The State of California or its officers or agents shall not be responsible for the accuracy or completeness of electronic copies of this plan sheet.

Notes:

1. For "Section C-C", see "Pier 2 & 6 Details" sheet.
2. For location of "Detail C", see "Arch Details No. 1" sheet.
3. "Tie Detail" on "Arch Rib Details No. 2" sheet applies to all 135° hooks in column @ Bent 4.

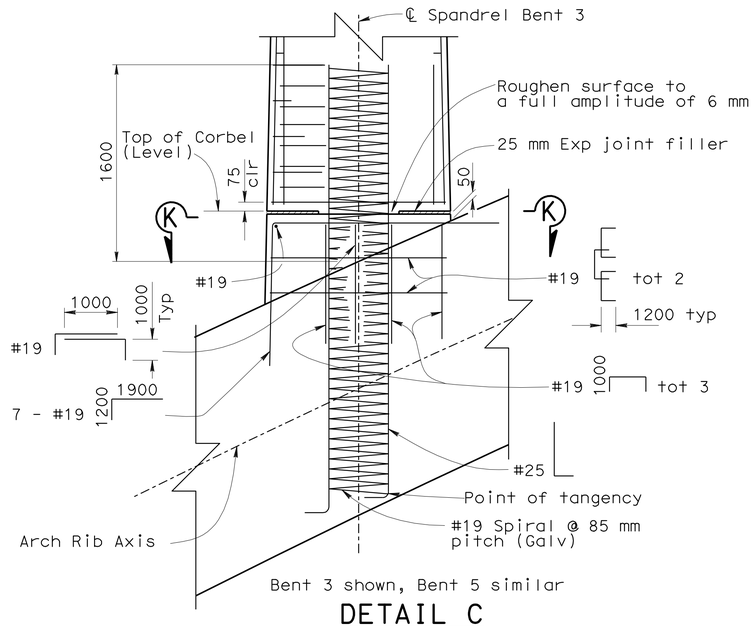

DETAIL C
1:25

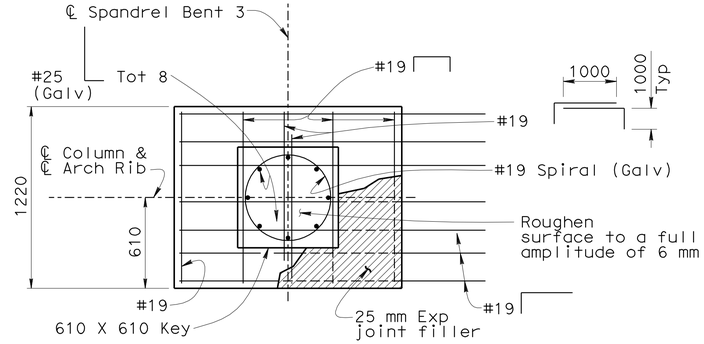

SECTION K-K
1:20

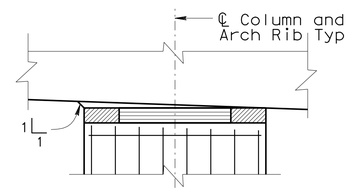

DETAIL D
1:20

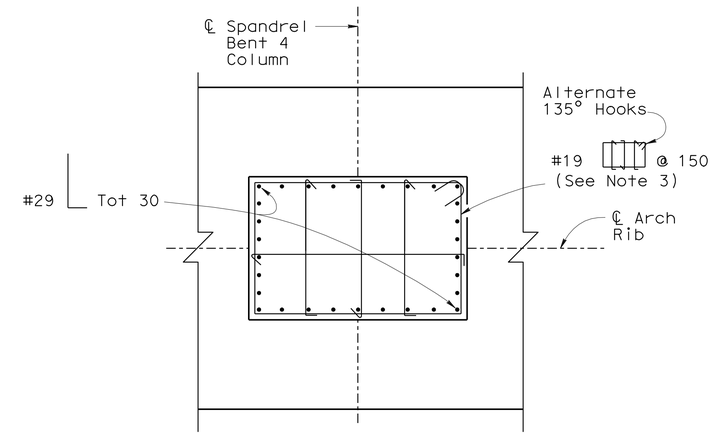

SECTION X-X
1:25
Note: For dimensions, see "View Y-Y"

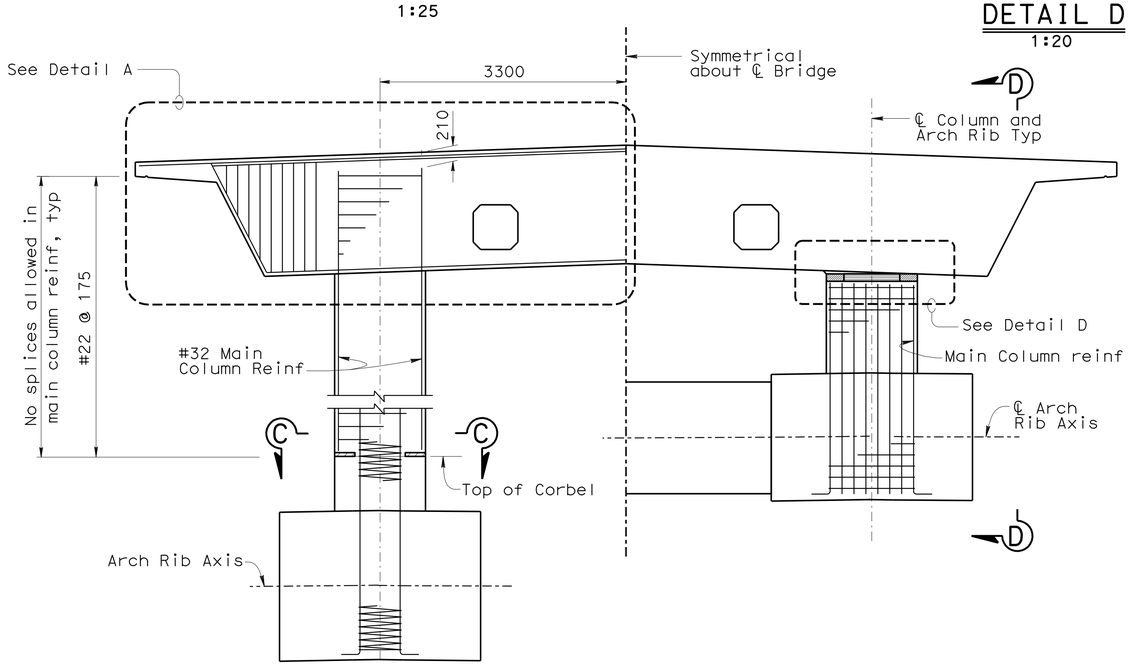

SPANDREL COLUMN BENT 3 & 5 SPANDREL COLUMN BENT 4

ELEVATION
1:40

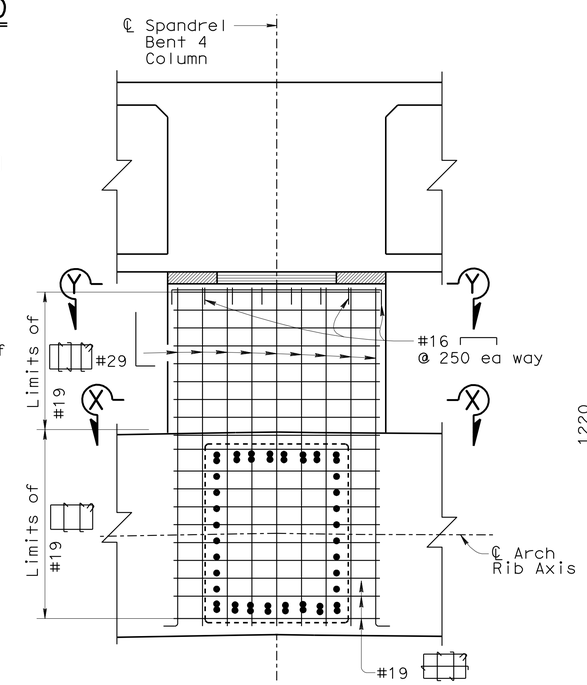

VIEW D-D
1:25

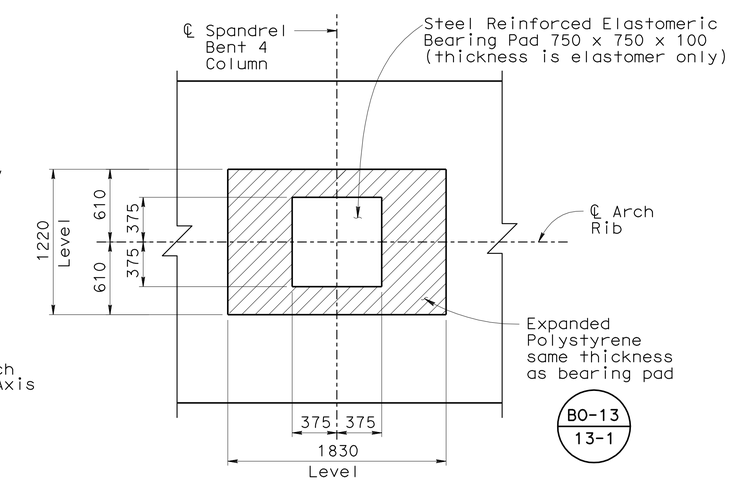

VIEW Y-Y
1:25

DESIGN	BY Eric Watson	CHECKED Kevin Harper/A Pearson	
DETAILS	BY Bob Huddleston/JZ	CHECKED Kevin Harper/A Pearson	
QUANTITIES	BY Daniel Sessions	CHECKED GT/GJ	

STATE OF CALIFORNIA
DEPARTMENT OF TRANSPORTATION

DIVISION OF ENGINEERING SERVICES
STRUCTURE DESIGN
DESIGN BRANCH 1

BRIDGE NO. 09-0077
KILOMETER POST 56.8

SPANISH CREEK BRIDGE (REPLACE)
SPANDREL BENT DETAILS

ALL DIMENSIONS ARE IN MILLIMETERS UNLESS OTHERWISE SHOWN

ORIGINAL SCALE IN MILLIMETERS FOR REDUCED PLANS 0 10 20 30 40 50 60 70 80 90 100

CU 02
EA 373101

DISREGARD PRINTS BEARING EARLIER REVISION DATES

REVISION DATES: 05/19/09 06/02/09 06/29/09 06/24/09 08/28/09 08/24/09 09/21/09 9/24/09 9/25/09 10/8/09

SHEET 21 OF 55

FILE => 09-0077-k-b01dt01.dgn

STRUCTURES DESIGN DETAIL SHEET (METRIC) (REV.03-17-04)

USERNAME => trmikesl DATE PLOTTED => 10-NOV-2009 TIME PLOTTED => 07:25

DIST	COUNTY	ROUTE	KILOMETER POST TOTAL PROJECT	SHEET No	TOTAL SHEETS
02	Plu	70	56.5/57.2	109	149

Eric Watson 10/23/09
REGISTERED CIVIL ENGINEER DATE

11-2-09
PLANS APPROVAL DATE

REGISTERED PROFESSIONAL ENGINEER Eric Watson No. 64273 Exp. 6-30-11 CIVIL STATE OF CALIFORNIA

The State of California or its officers or agents shall not be responsible for the accuracy or completeness of electronic copies of this plan sheet.

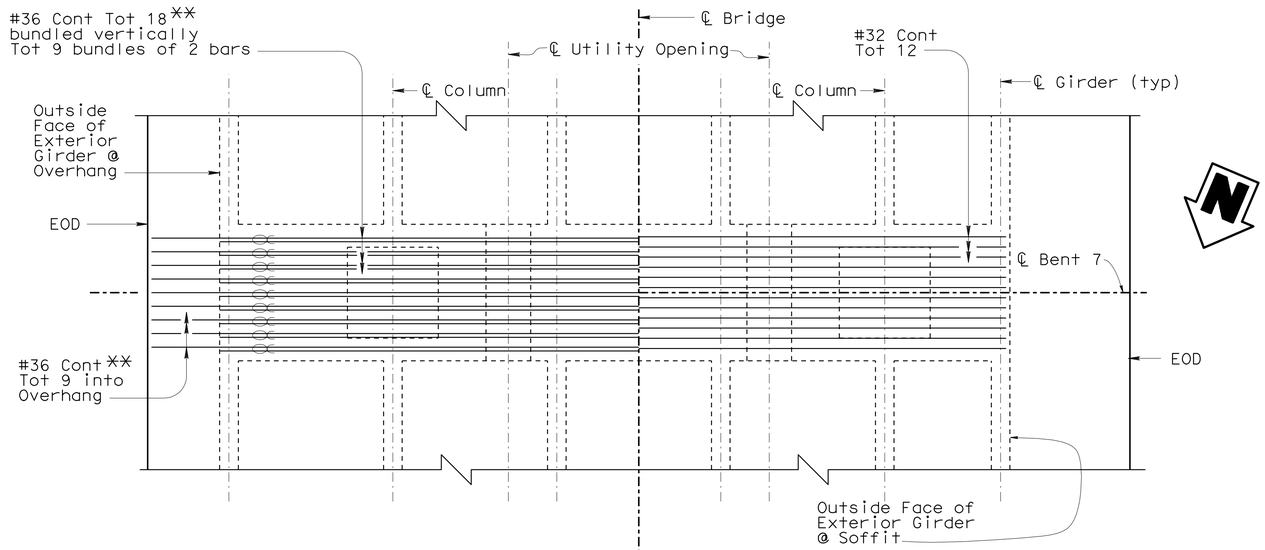

VIEW D-D
1:40

Notes:

1. Top & Bottom Reinf symmetrical about ℄ Bridge.
2. No lap splices allowed.

∝ Indicates bundled bars.
** Indicates epoxy coated reinf.

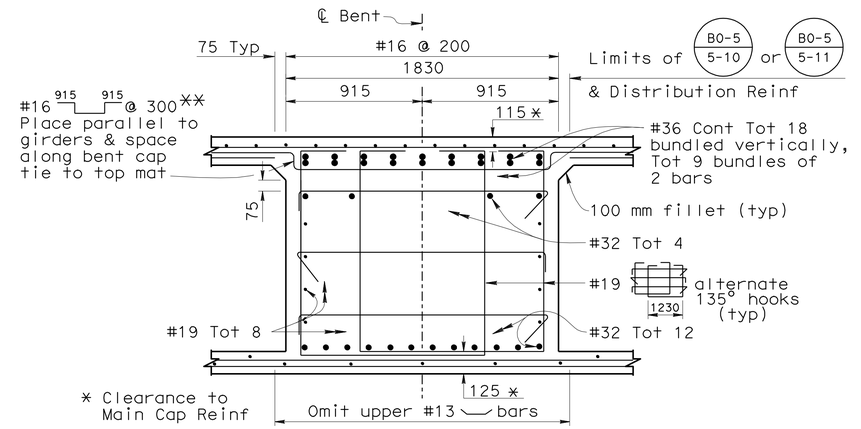

SECTION A-A
1:20

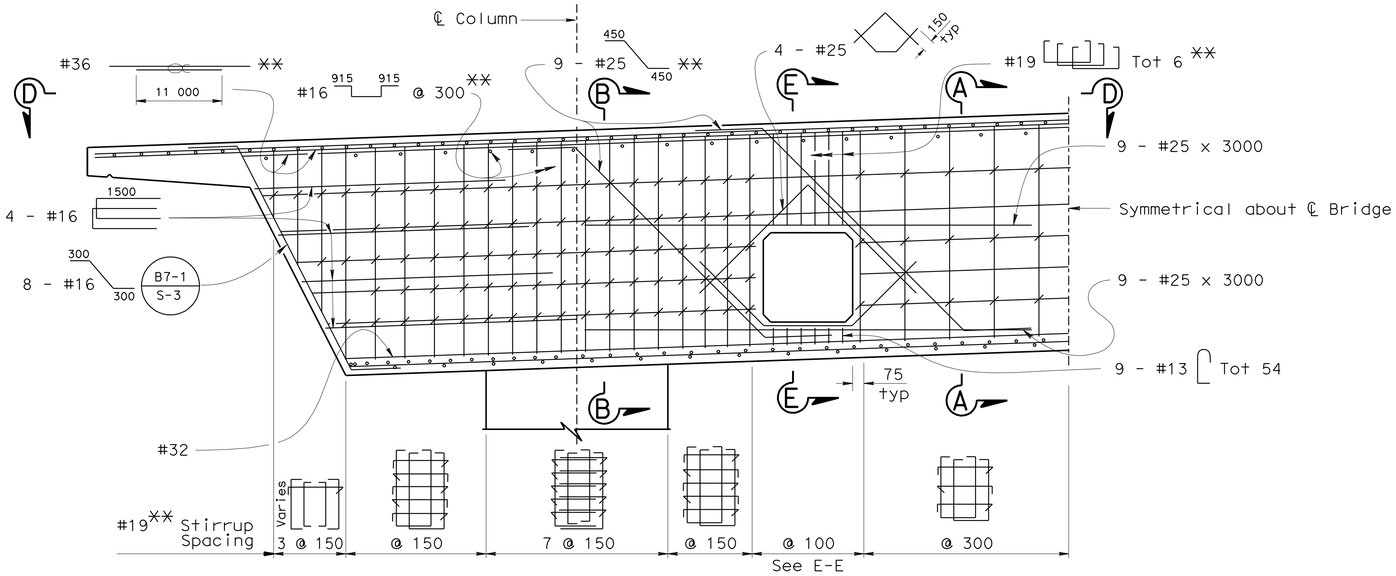

DETAIL A
1:20

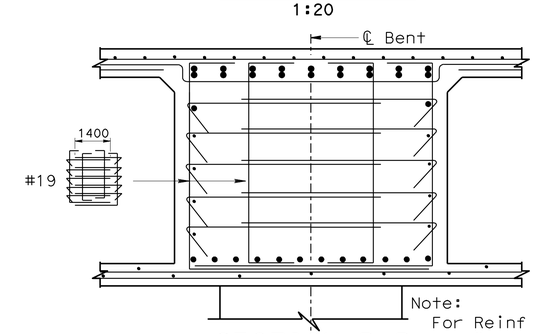

SECTION B-B
1:20

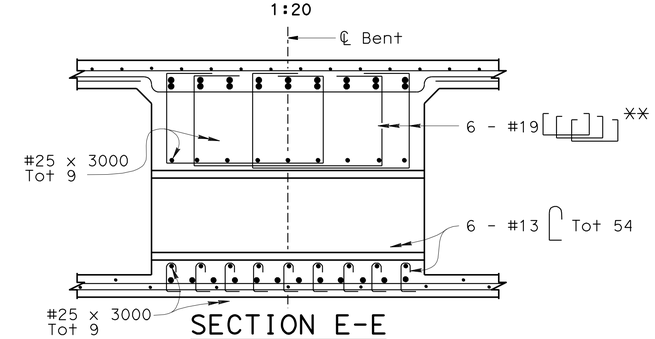

SECTION E-E
1:20

DESIGN	BY Eric Watson	CHECKED D. Sessions/K. Harper	
DETAILS	BY Bob Huddleston/JZ/GMS	CHECKED D. Sessions/K. Harper	
QUANTITIES	BY Mark Simonsen	CHECKED Yihwin Huang	

STATE OF CALIFORNIA
DEPARTMENT OF TRANSPORTATION

DIVISION OF ENGINEERING SERVICES
STRUCTURE DESIGN
DESIGN BRANCH 1

CU 02
EA 373101

BRIDGE NO. 09-0077
KILOMETER POST 56.8

SPANISH CREEK BRIDGE (REPLACE)
BENT DETAILS

Caltrans Metric

ALL DIMENSIONS ARE IN MILLIMETERS UNLESS OTHERWISE SHOWN

ORIGINAL SCALE IN MILLIMETERS FOR REDUCED PLANS 0 10 20 30 40 50 60 70 80 90 100

DISREGARD PRINTS BEARING EARLIER REVISION DATES

REVISION DATES: 6-19-06 06-19-07 06-27-07 06/19/09 06/22/09 08/24/09 09/14/09 9/24/09 10/06/09 10/12/09

SHEET 22 OF 55

FILE => 09-0077-k-b01dt02.dgn

STRUCTURES DESIGN DETAIL SHEET (METRIC) (REV.03-17-04)

USERNAME => trmikesl DATE PLOTTED => 10-NOV-2009 TIME PLOTTED => 07:25

DIST	COUNTY	ROUTE	KILOMETER POST TOTAL PROJECT	SHEET No	TOTAL SHEETS
02	Plu	70	56.5/57.2	110	149

Eric Watson 10/23/09
REGISTERED CIVIL ENGINEER DATE

11-2-09
PLANS APPROVAL DATE

REGISTERED PROFESSIONAL ENGINEER Eric Watson No. 64273 Exp. 6-30-11 CIVIL STATE OF CALIFORNIA

The State of California or its officers or agents shall not be responsible for the accuracy or completeness of electronic copies of this plan sheet.

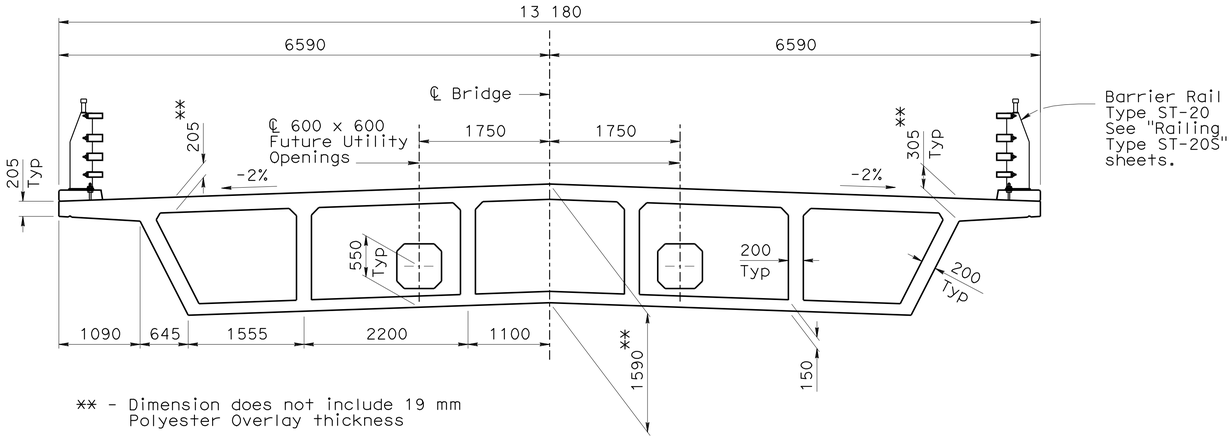

TYPICAL SECTION

1:40

Notes:

1. Continuous #32 bars shall be spliced with "Service Butt Splice". See "GIRDER REINFORCEMENT" sheets.
2. No splices within 5500 mm of ℄ Bent or ℄ Bearing Abutment.
3. For location of "SECTION A-A", see "Girder Layout" sheet.

* Indicates epoxy coated rebar

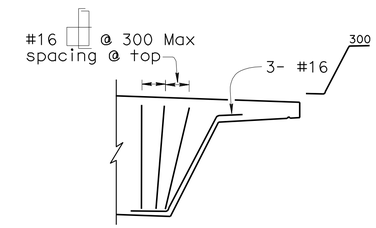

DETAIL E

NO SCALE

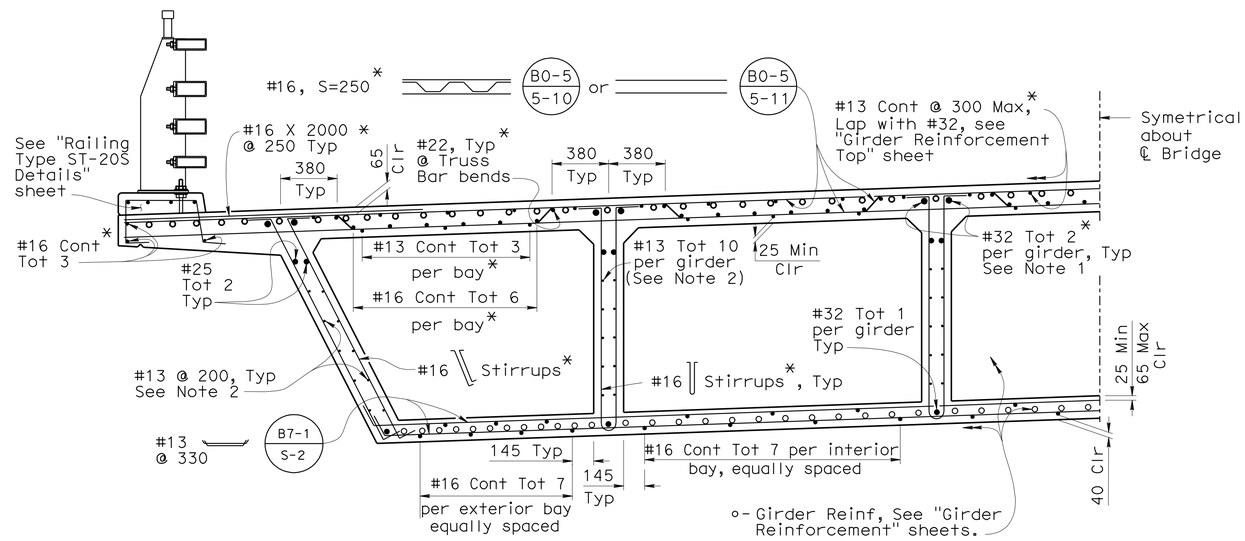

PART TYPICAL SECTION

1:20

B0-5 B7-1

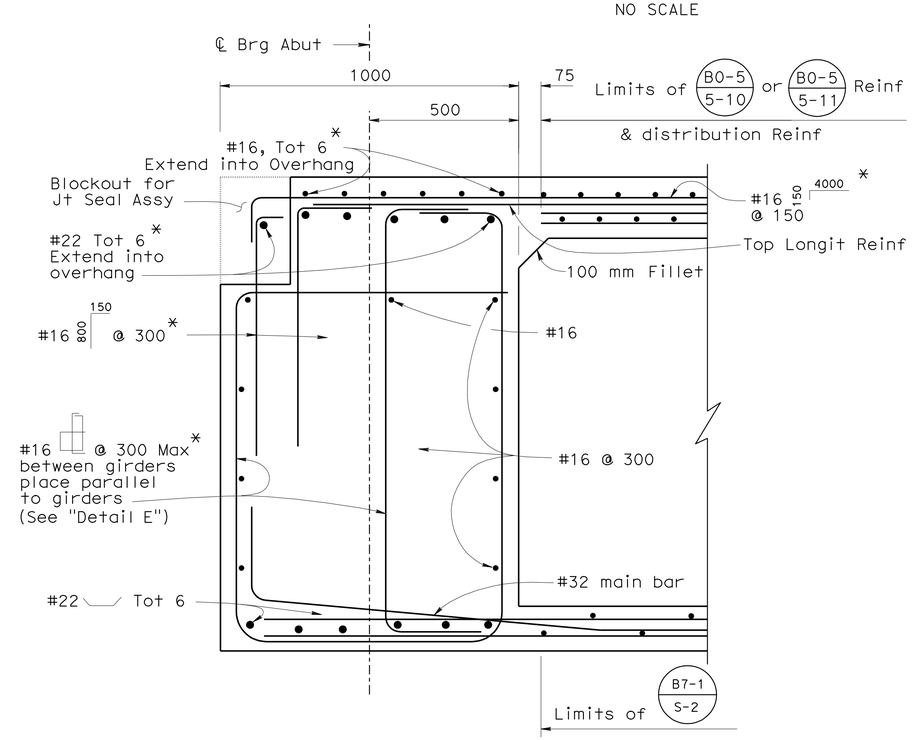

SECTION A-A

1:10

For location of "SECTION A-A", see "Girder Layout" sheet

DESIGN	BY Eric Watson	CHECKED Mark Simonsen	
DETAILS	BY Bob Huddleston/JZ	CHECKED Mark Simonsen	
QUANTITIES	BY Mark Simonsen	CHECKED Yihwin Huang	

STATE OF CALIFORNIA DEPARTMENT OF TRANSPORTATION

DIVISION OF ENGINEERING SERVICES STRUCTURE DESIGN
DESIGN BRANCH 1

BRIDGE NO. 09-0077
KILOMETER POST 56.8

SPANISH CREEK BRIDGE (REPLACE)
TYPICAL SECTION

Caltrans Metric

ALL DIMENSIONS ARE IN MILLIMETERS UNLESS OTHERWISE SHOWN

ORIGINAL SCALE IN MILLIMETERS FOR REDUCED PLANS 0 10 20 30 40 50 60 70 80 90 100

CU 02
EA 373101

DISREGARD PRINTS BEARING EARLIER REVISION DATES

REVISION DATES: 4-26-06 10/08/09 10/13/09 10/14/09 06-21-07 05/26/09 6/15/09 06/22/09 09/01/09

SHEET 23 OF 55

FILE => 09-0077-k-ts01.dgn

STRUCTURES DESIGN DETAIL SHEET (METRIC) (REV.03-17-04)

USERNAME => trmikes1 DATE PLOTTED => 10-NOV-2009 TIME PLOTTED => 07:25

DIST	COUNTY	ROUTE	KILOMETER POST TOTAL PROJECT	SHEET No	TOTAL SHEETS
02	Plu	70	56.5/57.2	111	149

Eric Watson 10/23/09
REGISTERED CIVIL ENGINEER DATE

11-2-09
PLANS APPROVAL DATE

REGISTERED PROFESSIONAL ENGINEER Eric Watson No. 64723 Exp. 6-30-11 CIVIL STATE OF CALIFORNIA

The State of California or its officers or agents shall not be responsible for the accuracy or completeness of electronic copies of this plan sheet.

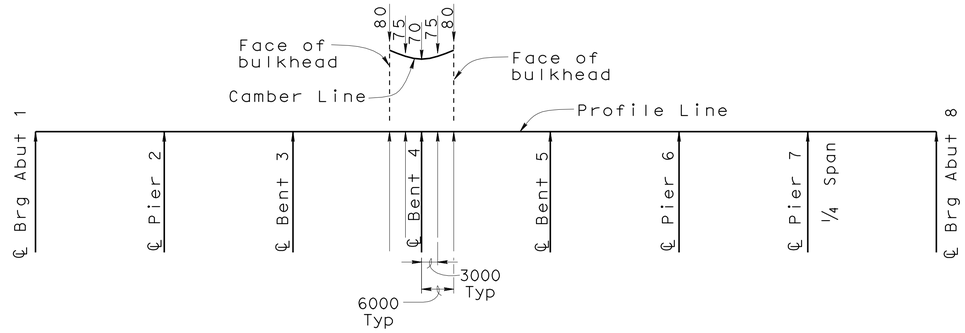

CONSTRUCTION SEQUENCE (5)

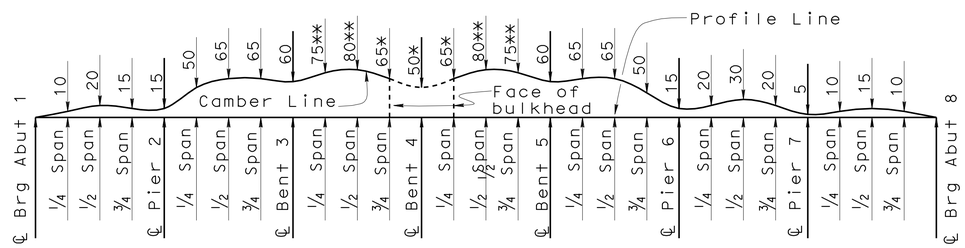

CONSTRUCTION SEQUENCE (6)

CAMBER DIAGRAM

NO SCALE

Note:

1. Does not include allowance for falsework settlement
2. See "Construction Sequence" sheet

* Indicates Theoretical camber of previously constructed box girder segment for information only. Match existing grades

** Adjust camber values to match actual camber remaining at previously constructed bulkhead

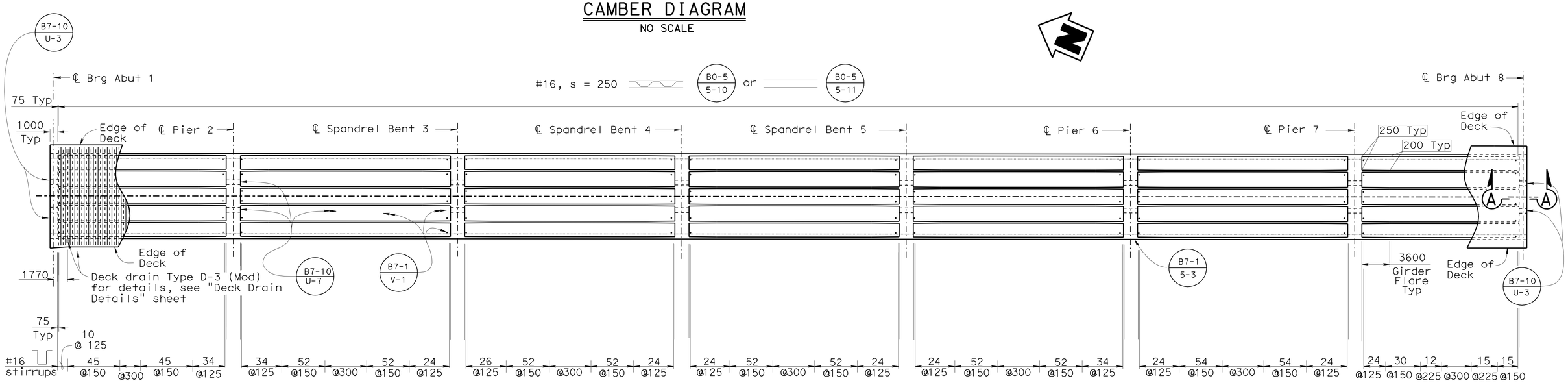

GIRDER LAYOUT (B7-1)

NO SCALE

Note:

1. For "SECTION A-A", see "TYPICAL SECTION" sheet.

DESIGN	BY Eric Watson	CHECKED M. Simonsen/K. Harper	
DETAILS	BY Bob Huddleston/JZ	CHECKED M. Simonsen/K. Harper	
QUANTITIES	BY Mark Simonsen	CHECKED Yihwin Huang	

STATE OF CALIFORNIA
DEPARTMENT OF TRANSPORTATION

DIVISION OF ENGINEERING SERVICES
STRUCTURE DESIGN
DESIGN BRANCH 1

CU 02
EA 373101

BRIDGE NO. 09-0077
KILOMETER POST 56.8

SPANISH CREEK BRIDGE (REPLACE)
GIRDER LAYOUT

Caltrans Metric

ALL DIMENSIONS ARE IN MILLIMETERS UNLESS OTHERWISE SHOWN

ORIGINAL SCALE IN MILLIMETERS FOR REDUCED PLANS 0 10 20 30 40 50 60 70 80 90 100

DISREGARD PRINTS BEARING EARLIER REVISION DATES

REVISION DATES: 5-04-06 5-23-06 12-18-06 05/26/09 06/22/09 06/23/09 08/18/09 9/17/09 10/08/09 10/14/09

SHEET 24 OF 55

FILE => 09-0077-1-g_1001.dgn

STRUCTURES DESIGN DETAIL SHEET (METRIC) (REV.03-17-04)

USERNAME => trmikes1 DATE PLOTTED => 10-NOV-2009 TIME PLOTTED => 07:26

DIST	COUNTY	ROUTE	KILOMETER POST TOTAL PROJECT	SHEET No	TOTAL SHEETS
02	Plu	70	56.5/57.2	112	149

Eric Watson 10/23/09
REGISTERED CIVIL ENGINEER DATE

11-2-09
PLANS APPROVAL DATE

REGISTERED PROFESSIONAL ENGINEER Eric Watson No. 64273 Exp. 6-30-11 CIVIL STATE OF CALIFORNIA

The State of California or its officers or agents shall not be responsible for the accuracy or completeness of electronic copies of this plan sheet.

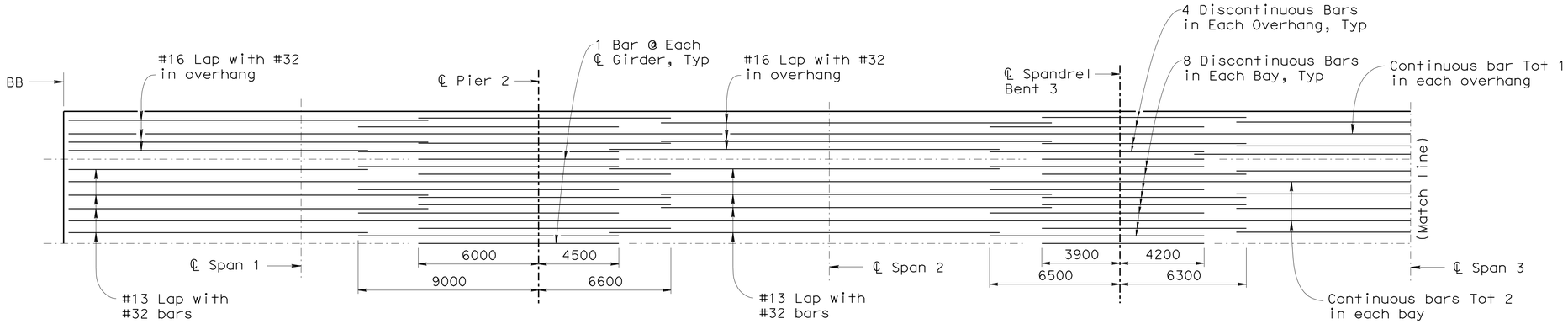

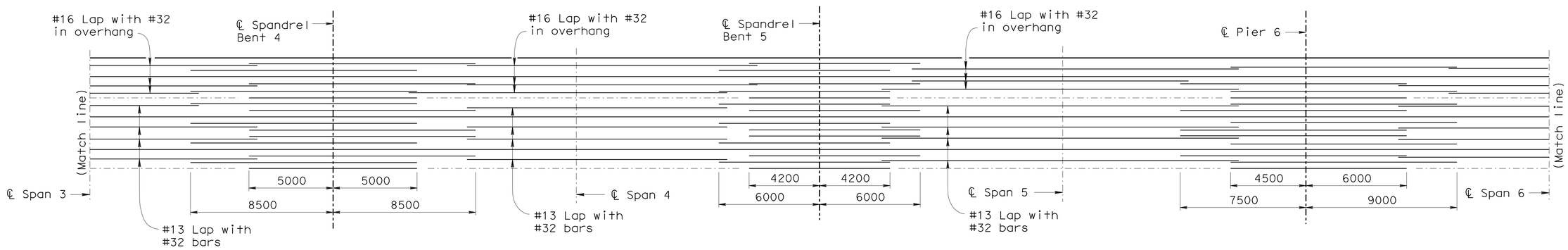

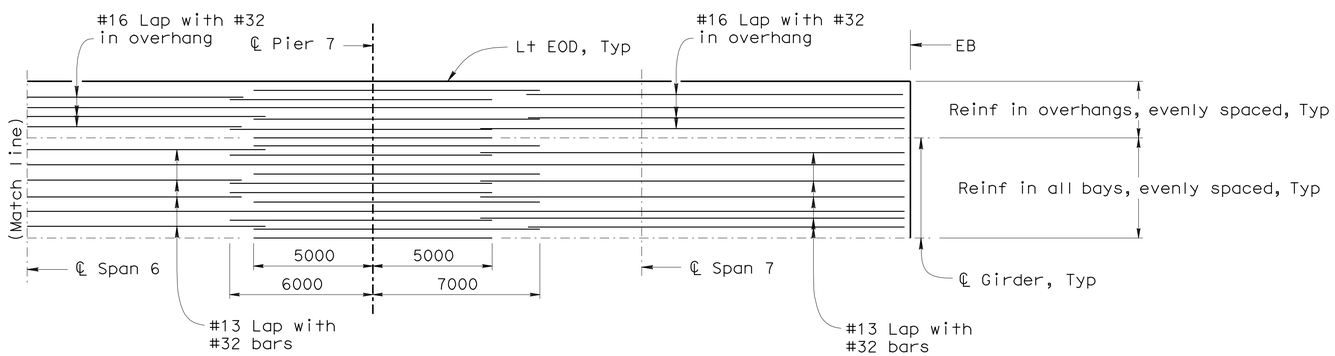

PLAN
NO SCALE

Notes:

1. All Reinf bars are size #32.
2. No splices allowed in discontinuous bars.
3. Continuous bars shall be spliced with "Service Butt Splices"
4. Longitudinal bar spacing shall not exceed 300mm. Use additional #13 bars where necessary.
5. Reinforcement on this sheet is noted as "Additional Girder Reinforcement" on the "Typical Section" sheet

Caltrans Metric

	BY	CHECKED
DESIGN	Eric Watson	Mark Simonsen
DETAILS	Bob Huddleston/JZ	Mark Simonsen
QUANTITIES	Greg Thornton	Daniel Sessions

STATE OF CALIFORNIA
DEPARTMENT OF TRANSPORTATION

DIVISION OF ENGINEERING SERVICES
STRUCTURE DESIGN
DESIGN BRANCH 1

BRIDGE NO. 09-0077
KILOMETER POST 56.8

SPANISH CREEK BRIDGE (REPLACE)
GIRDER REINFORCEMENT TOP

ALL DIMENSIONS ARE IN MILLIMETERS UNLESS OTHERWISE SHOWN

ORIGINAL SCALE IN MILLIMETERS FOR REDUCED PLANS 0 10 20 30 40 50 60 70 80 90 100

CU 02
EA 373101

DISREGARD PRINTS BEARING EARLIER REVISION DATES

REVISION DATES: 5-24-06 6-08-06 05/26/09 6/18/09 6/19/09 8/11/09 10/14/09

SHEET 25 OF 55

FILE => 09-0077-o-greinf01.dgn

STRUCTURES DESIGN DETAIL SHEET (METRIC) (REV.03-17-04)

USERNAME => trmikes1 DATE PLOTTED => 10-NOV-2009 TIME PLOTTED => 07:26

DIST	COUNTY	ROUTE	KILOMETER POST TOTAL PROJECT	SHEET No	TOTAL SHEETS
02	Plu	70	56.5/57.2	113	149

Eric Watson 10/23/09
REGISTERED CIVIL ENGINEER DATE

11-2-09
PLANS APPROVAL DATE

REGISTERED PROFESSIONAL ENGINEER Eric Watson No. 64273 Exp. 6-30-11 CIVIL STATE OF CALIFORNIA

The State of California or its officers or agents shall not be responsible for the accuracy or completeness of electronic copies of this plan sheet.

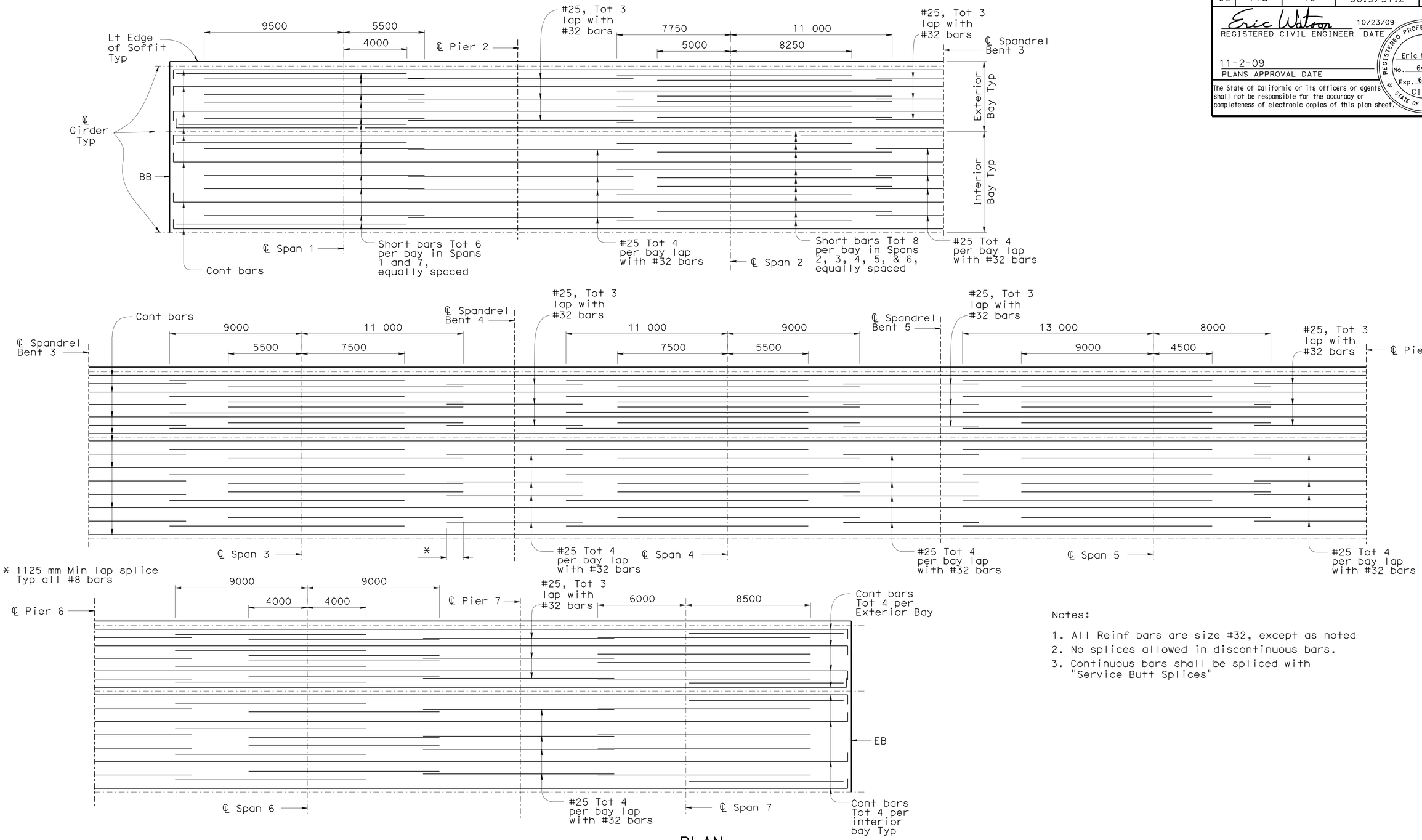

Notes:

1. All Reinf bars are size #32, except as noted
2. No splices allowed in discontinuous bars.
3. Continuous bars shall be spliced with "Service Butt Splices"

PLAN
NO SCALE

Caltrans Metric

	BY	CHECKED
DESIGN	Eric Watson	Mark Simonsen
DETAILS	Bob Huddleston/JZ	Mark Simonsen
QUANTITIES	Greg Thornton	Daniel Sessions

STATE OF CALIFORNIA
DEPARTMENT OF TRANSPORTATION

DIVISION OF ENGINEERING SERVICES
STRUCTURE DESIGN
DESIGN BRANCH 1

BRIDGE NO. 09-0077
KILOMETER POST 56.8

SPANISH CREEK BRIDGE (REPLACE)
GIRDER REINFORCEMENT BOTTOM

ALL DIMENSIONS ARE IN MILLIMETERS UNLESS OTHERWISE SHOWN

ORIGINAL SCALE IN MILLIMETERS FOR REDUCED PLANS 0 10 20 30 40 50 60 70 80 90 100

CU 02
EA 373101

DISREGARD PRINTS BEARING EARLIER REVISION DATES

REVISION DATES: 5-24-06 5-25-06 05/24/09 06/19/09 06/23/09 08/19/09 09/09/09 10/08/09 10/23/09

SHEET 26 OF 55

FILE => 09-0077-o-greinf02.dgn

STRUCTURES DESIGN DETAIL SHEET (METRIC) (REV.03-17-04)

USERNAME => trmikest DATE PLOTTED => 10-NOV-2009 TIME PLOTTED => 07:26

DIST	COUNTY	ROUTE	KILOMETER POST TOTAL PROJECT	SHEET No	TOTAL SHEETS
02	Plu	70	56.5/57.2	114	149

Eric Watson 10/23/09
REGISTERED CIVIL ENGINEER DATE

11-2-09
PLANS APPROVAL DATE

REGISTERED PROFESSIONAL ENGINEER
Eric Watson
No. 64273
Exp. 6-30-11
CIVIL
STATE OF CALIFORNIA

The State of California or its officers or agents shall not be responsible for the accuracy or completeness of electronic copies of this plan sheet.

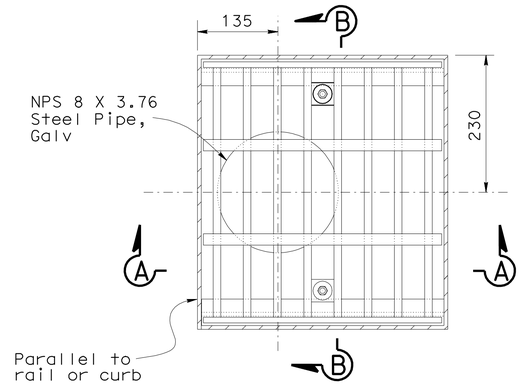

PLAN

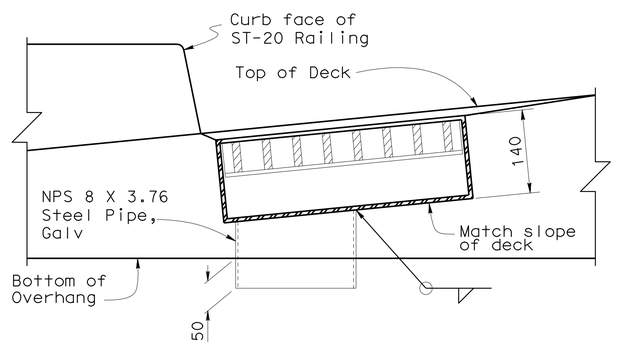

SECTION A-A

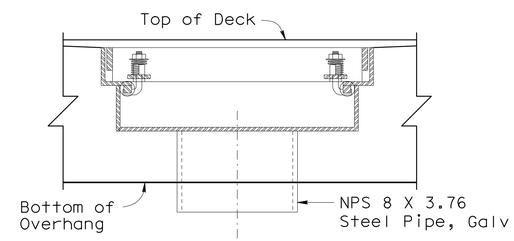

SECTION B-B

DECK DRAIN TYPE D-3 (MOD) DETAILS

B7-7

1:5

Notes:

1. For dimensions not shown and grate and frame details, see Standard Plan B7-7.
2. Galvanize deck drain assembly, drain pipes and supporting hardware after fabrication.
3. For location of deck drains, see "Girder Layout" sheet.

Caltrans Metric

	BY	CHECKED
DESIGN	Eric Watson	Daniel Sessions
DETAILS	Bob Huddleston	Daniel Sessions
QUANTITIES	Mark Simonsen	Yihwin Huang

STATE OF CALIFORNIA
DEPARTMENT OF TRANSPORTATION

DIVISION OF ENGINEERING SERVICES
STRUCTURE DESIGN
DESIGN BRANCH 1

BRIDGE NO. 09-0077
KILOMETER POST 56.8

SPANISH CREEK BRIDGE (REPLACE)
DECK DRAIN DETAILS

ALL DIMENSIONS ARE IN MILLIMETERS UNLESS OTHERWISE SHOWN

ORIGINAL SCALE IN MILLIMETERS FOR REDUCED PLANS 0 10 20 30 40 50 60 70 80 90 100

CU 02
EA 373101

DISREGARD PRINTS BEARING EARLIER REVISION DATES

REVISION DATES: 6-21-06 7/25/08 05/22/09 06/19/09 9/19/09 10/14/09

SHEET 27 OF 55

FILE => 09-0077-r-ddet01.dgn

STRUCTURES DESIGN DETAIL SHEET (METRIC) (REV.03-17-04)

USERNAME => trmikesl DATE PLOTTED => 10-NOV-2009 TIME PLOTTED => 07:26

DIST	COUNTY	ROUTE	KILOMETER POST TOTAL PROJECT	SHEET No	TOTAL SHEETS
02	Plu	70	56.5/57.2	115	149

Eric Watson 10/23/09
REGISTERED CIVIL ENGINEER DATE

11-2-09
PLANS APPROVAL DATE

REGISTERED PROFESSIONAL ENGINEER Eric Watson No. 64273 Exp. 6-30-11 CIVIL STATE OF CALIFORNIA

The State of California or its officers or agents shall not be responsible for the accuracy or completeness of electronic copies of this plan sheet.

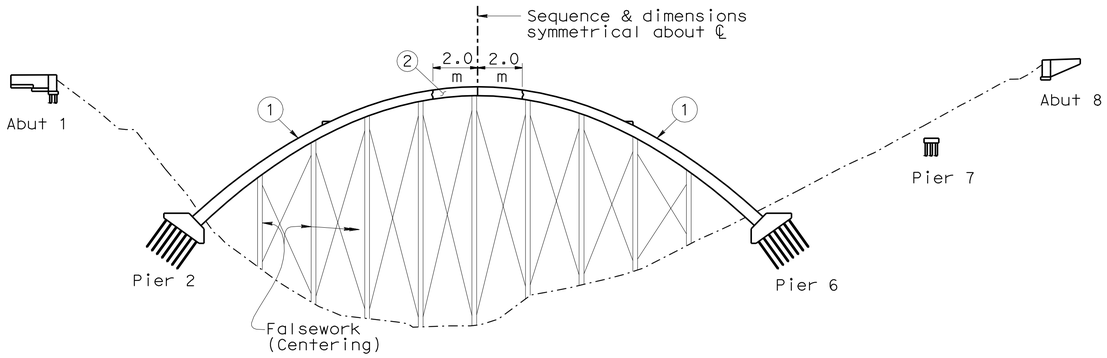

Construct Arch Abutments with Pier 2 & Pier 6 arch foundations.
Place arch rib sections in the order shown. Place struts with adjacent arch ribs.
All arch keys except crown are not to be placed until the remainder of the arch ribs have set for at least 48 hours. The final key segment at the crown is not to be poured until all other sections of the arch rib have set for at least 7 days.

STAGE 1

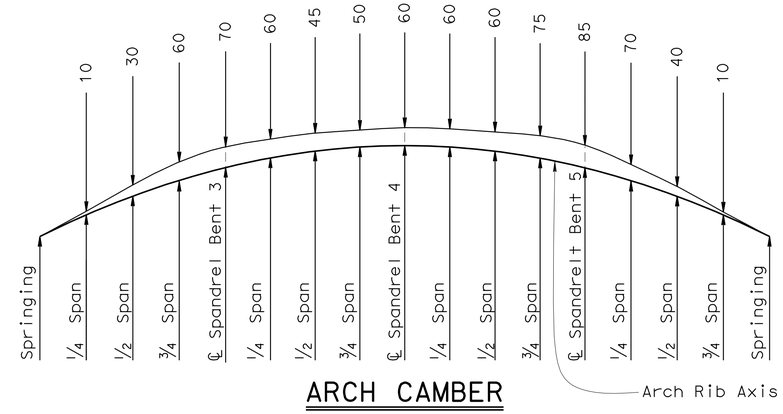

ARCH CAMBER

Note: Does not include allowance for falsework settlement

GENERAL CONSTRUCTION SEQUENCE NOTES:

Concrete pours to be made in the sequence indicated by the numbers shown on the diagrams. Sections having the same number on arch ribs & arch superstructure to be poured simultaneously. Abutments, and Pier 7 may be constructed at any stage

The arch camber diagram is for initial and long term deflection using the construction sequence shown. The camber diagram on the "Girder Layout" sheet is for the construction sequence shown. A construction sequence plan including camber for any alternative method shall be submitted for approval by the Engineer.

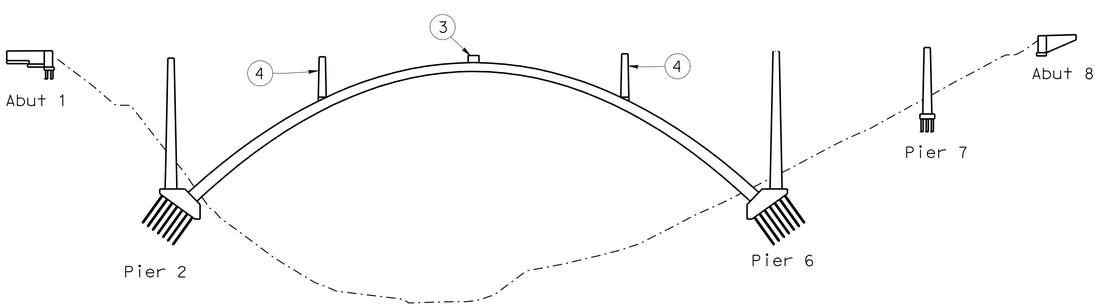

No portion above the projection of the arch shall be placed until 7 days after the closure is poured and compressive strength of not less than 25 MPa has been attained in the Arch Crown Closure and Strut. At this stage the arch centering may be struck. Piers 2 & 6 may be constructed at any time after the centering is struck. Construct spandrel columns on arch ribs as symmetrically as possible. Construction of falsework for superstructure above the arch may begin once the centering is struck.

STAGE 2

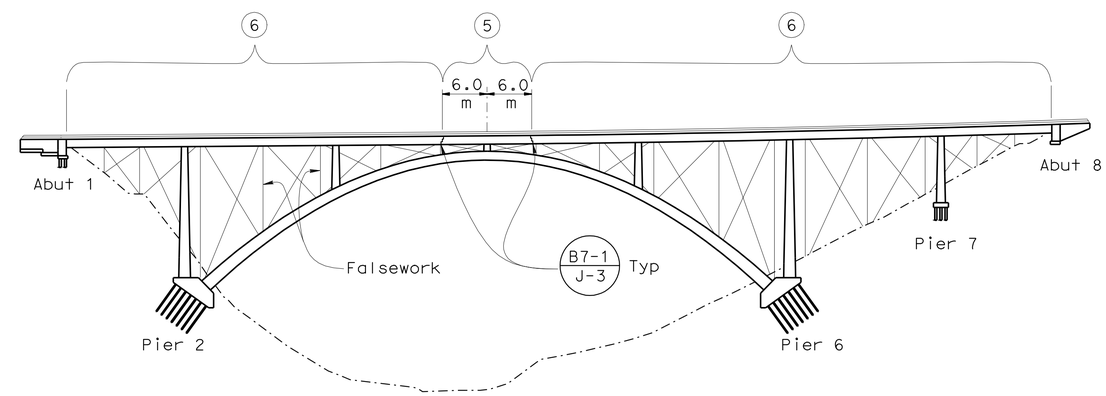

Construct superstructure on falsework. No portion of the superstructure over the arch span is to be poured until results of test cylinders show the 28 day strength has been reached. Concrete pours are to be made in the sequence shown and symmetrically in the transverse direction in order to evenly load the arch. The curb and railing shall not be placed until falsework has been released.

STAGE 3

Caltrans Metric

	BY	CHECKED
DESIGN	Eric Watson	Kevin Harper
DETAILS	Bob Huddleston/GMS	Kevin Harper
QUANTITIES	Mark Simonsen	Yihwin Huang

STATE OF CALIFORNIA
DEPARTMENT OF TRANSPORTATION

DIVISION OF ENGINEERING SERVICES
STRUCTURE DESIGN
DESIGN BRANCH 1

BRIDGE NO. 09-0077
KILOMETER POST 56.8

SPANISH CREEK BRIDGE (REPLACE)
CONSTRUCTION SEQUENCE

ALL DIMENSIONS ARE IN MILLIMETERS UNLESS OTHERWISE SHOWN

ORIGINAL SCALE IN MILLIMETERS FOR REDUCED PLANS 0 10 20 30 40 50 60 70 80 90 100

CU 02
EA 373101

DISREGARD PRINTS BEARING EARLIER REVISION DATES

REVISION DATES: 7-28-06 06-28-07 05/22/09 06/19/09 09/23/09 10/12/09 10/15/09

SHEET 28 OF 55

FILE => 09-0077-s-consq.dgn

STRUCTURES DESIGN DETAIL SHEET (METRIC) (REV.03-17-04)

USERNAME => trmikest DATE PLOTTED => 10-NOV-2009 TIME PLOTTED => 07:27

DIST.	COUNTY	ROUTE	KILOMETER POST TOTAL PROJECT	SHEET NO.	TOTAL SHEETS
02	Plu	70	56.5/57.2	116	149

Caltrans Metric

Eric Watson 10/23/09
REGISTERED ENGINEER - CIVIL

11-2-09
PLANS APPROVAL DATE

REGISTERED PROFESSIONAL ENGINEER Eric Watson No. 64273 Exp. 6-30-11 CIVIL STATE OF CALIFORNIA

The State of California or its officers or agents shall not be responsible for the accuracy or completeness of electronic copies of this plan sheet.

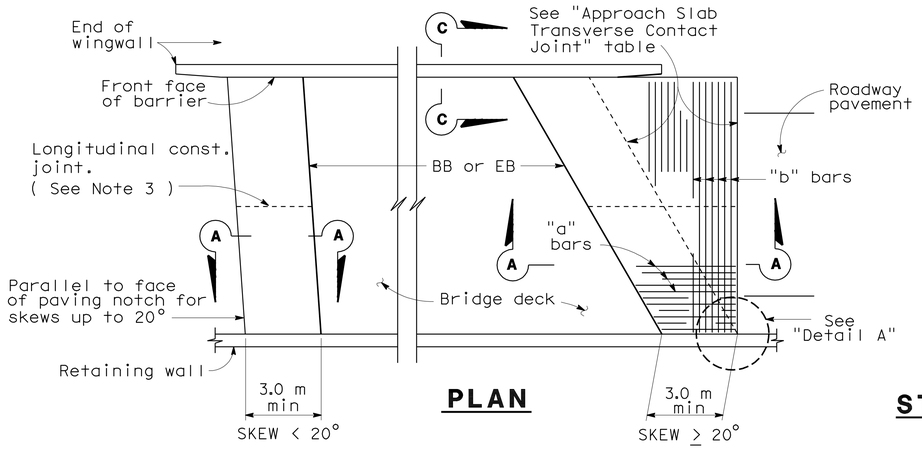

PLAN

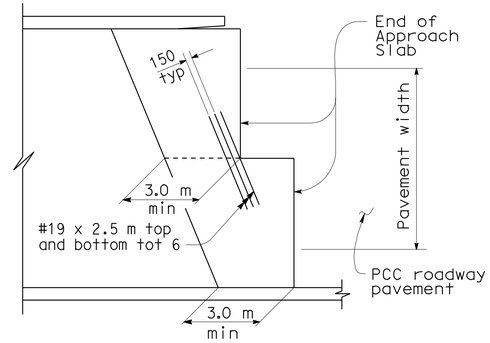

STRUCTURE APPROACH - END STAGGER DETAIL

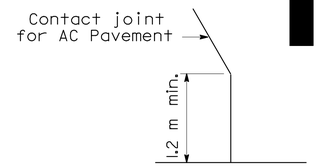

DETAIL A

APPROACH SLAB TRANSVERSE CONTACT JOINT		
STRUCTURE SKEW	AC APPROACH PAVEMENT	PCC APPROACH PAVEMENT
< 20°	Parallel to face of paving notch	Parallel to face of paving notch
20°- 45°	Parallel to face of P N use (Detail A)	Stagger lines 7.2 m to 10.8 m apart
> 45°	Parallel to face of P N use (Detail A)	Stagger at each lane line

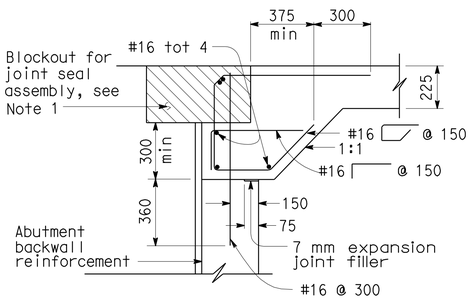

MR > 50 mm

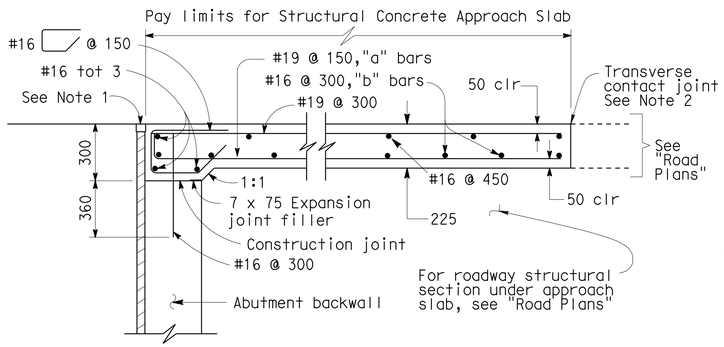

MR ≤ 50 mm

SEAT TYPE ABUTMENT
SECTION A-A

Note: Seat Type Abutment shown,for Diaphragm Type Abutment,see "Abutment Tie Details".

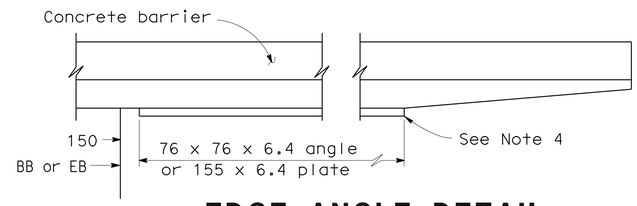

EDGE ANGLE DETAIL

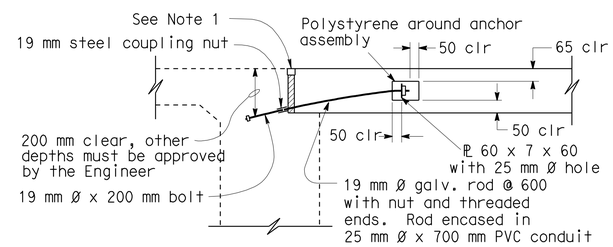

225 mm PAVING NOTCH

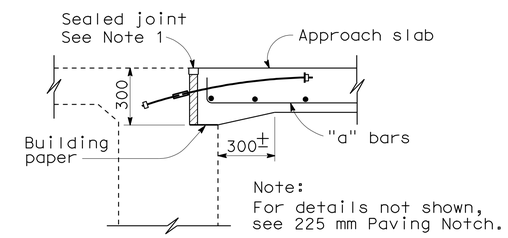

300 mm PAVING NOTCH

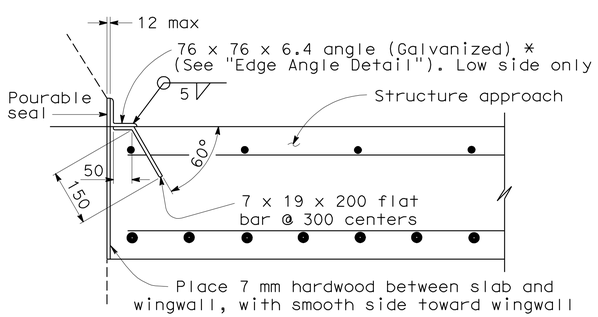

***(TO BE USED WITH TYPE 25 OR TYPE 27 CONCRETE BARRIER)**

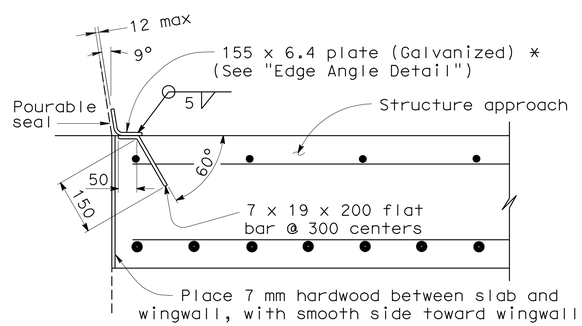

***(TO BE USED WITH TYPE 732 OR TYPE 736 CONCRETE BARRIER OR TYPE ST-20S)**

1

DETAIL B

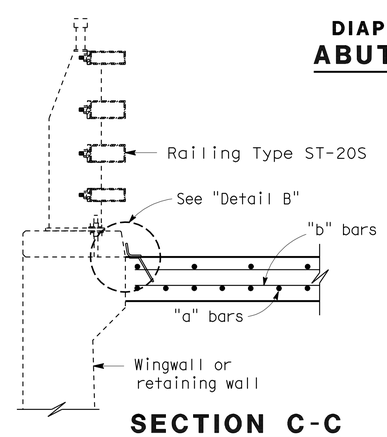

SECTION C-C

1

NO SCALE

DIAPHRAGM TYPE ABUTMENT
ABUTMENT TIE DETAILS

NOTES:

1. For details not noted or shown, see Structure Plans. Adjust bar reinforcement to clear a sawcut for sealed joint,when required.
2. For transverse contact joint with new PCC paving, refer to Standard Plan P10.
3. Longitudinal construction joints,when permitted by the Engineer,shall be located on lane lines.
4. End angle or plate at beginning of barrier transition, end of wing wall or end of structure approach as applicable.
5. At the contractor's option,approach slab transverse reinforcement may be placed parallel to paving notch. Spacing of transverse reinforcement is measured along ℄ roadway.
6. For drainage details, see Structure Plans.
7. All reinforcement to be epoxy coated. (2)

SPECIAL DETAILS

ALL DIMENSIONS ARE IN MILLIMETERS UNLESS OTHERWISE SHOWN

STANDARD DRAWING

RELEASE DATE	Revised	DESIGN	BY M. TRAFFALIS	CHECKED E. THORKILDSEN	RELEASED BY
FILE NO.	xs3-150	DETAILS	BY R. YEE	CHECKED E. THORKILDSEN	
		SUBMITTED	BY M. HA	DRAWING DATE 6/93	OFFICE CHIEF

1 - Modified Detail
2 - Added Note

STATE OF CALIFORNIA
DEPARTMENT OF TRANSPORTATION

DIVISION OF ENGINEERING SERVICES
STRUCTURE DESIGN
DESIGN BRANCH 1

BRIDGE NO. 09-0077
KILOMETER POST 56.8

SPANISH CREEK BRIDGE (REPLACE)
STRUCTURE APPROACH TYPE EQ(3)

DS OSD 2147A (METRIC) (REV. 2/25/97)

ORIGINAL SCALE IN MILLIMETERS FOR REDUCED PLANS 0 10 20 30 40 50 60 70 80 90 100

CU 02
EA 373101

DISREGARD PRINTS BEARING EARLIER REVISION DATES

REVISION DATES (PRELIMINARY STAGE ONLY) 5-08-06 6-08-06 6-29-07 05/22/08 06/19/08 09/09/12 09-23-09

SHEET 29 OF 55

USERNAME => trmikesl

09-0077-s-sad.dgn

DATE PLOTTED => 10-NOV-2009 TIME PLOTTED => 07:27

DIST.	COUNTY	ROUTE	KILOMETER POST TOTAL PROJECT	SHEET NO.	TOTAL SHEETS
02	Plu	70	56.5/57.2	117	149

Caltrans Metric

Eric Watson 10/23/09
REGISTERED ENGINEER - CIVIL

11-2-09
PLANS APPROVAL DATE

REGISTERED PROFESSIONAL ENGINEER Eric Watson No. 64273 Exp. 6-30-11 CIVIL STATE OF CALIFORNIA

The State of California or its officers or agents shall not be responsible for the accuracy or completeness of electronic copies of this plan sheet.

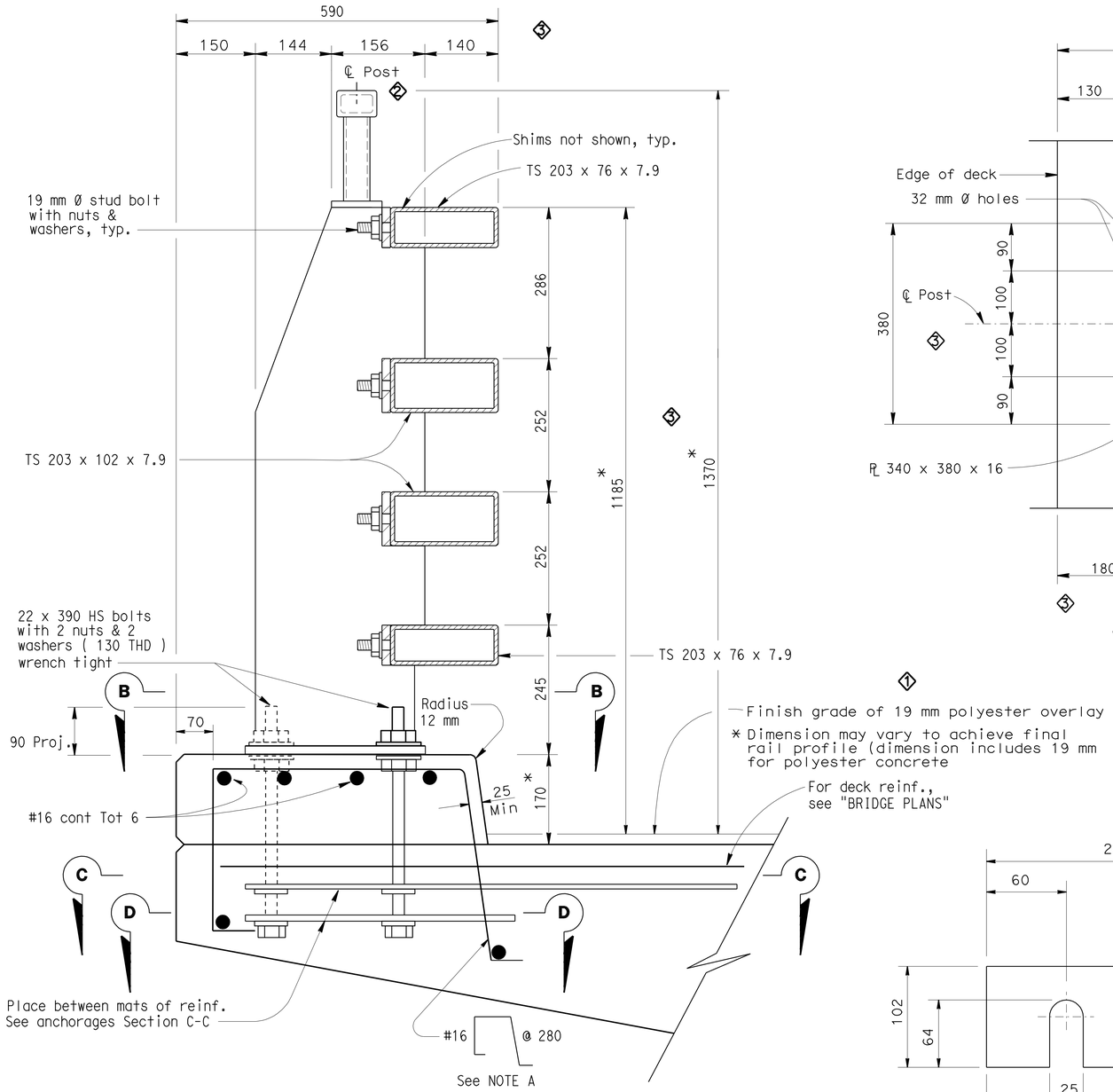

TYPICAL RAIL SECTION

Scale 1:5

NOTES A: Adjust spacing to clear scupper openings by 50 mm if applicable.

B: All reinforcement to be epoxy coated.

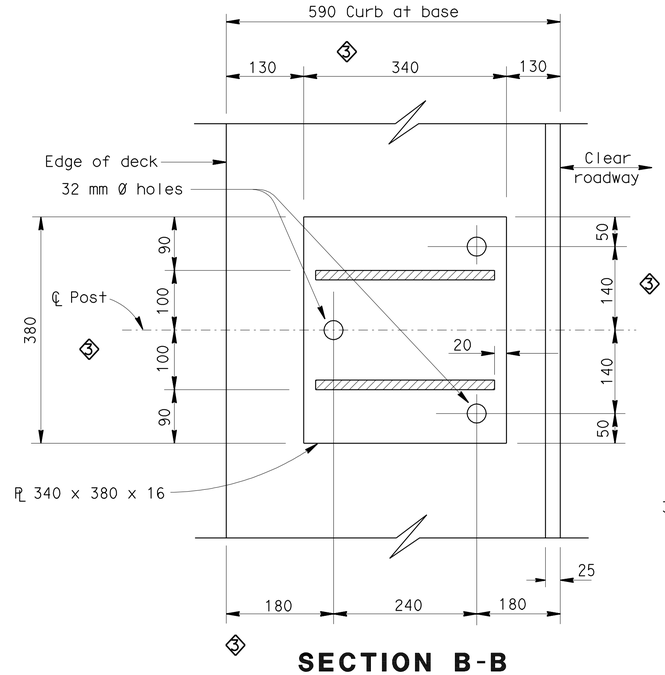

SECTION B-B

No Scale

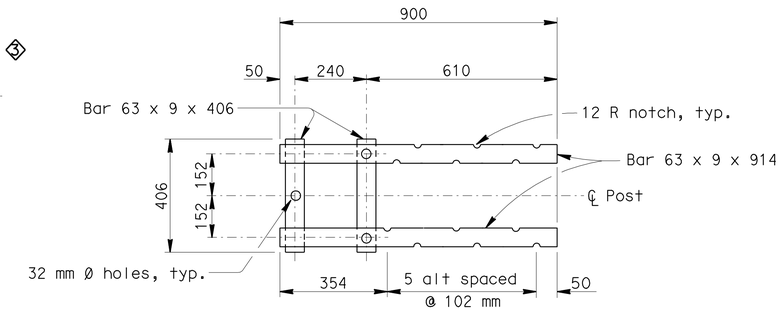

SECTION C-C

Top Anchorage
No Scale

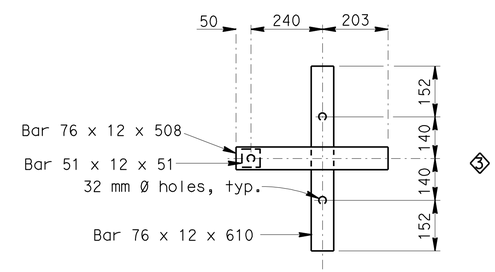

SECTION D-D

Lower Anchorage
No Scale

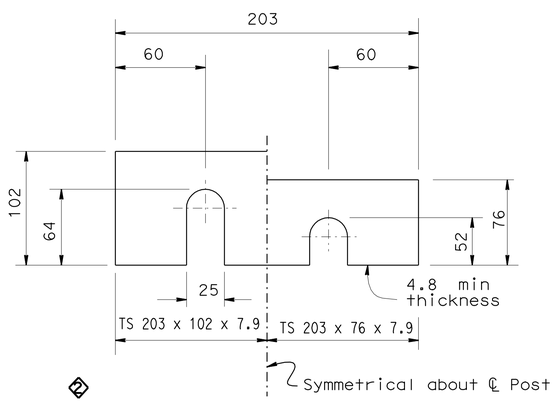

SHIMS REQUIRED FOR ALL RAILS

No Scale

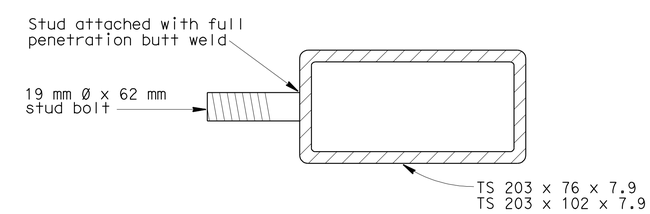

SECTION AT POST

No Scale

SPECIAL DETAILS

ALL DIMENSIONS ARE IN MILLIMETERS UNLESS OTHERWISE SHOWN

STANDARD DRAWING				
RELEASE DATE REVISED	DESIGN	BY N ABDIN	CHECKED FELIX ALTAMIRANO	RELEASED BY Roberto Lacalle OFFICE CHIEF
	DETAILS	BY R YEE	CHECKED N ABDIN	
FILE NO. xs16-205-1	SUBMITTED	BY N ABDIN	DRAWING DATE 10/20/04	

1. Revised Note
2. Revised Detail
3. Revised Dimension

STATE OF CALIFORNIA
DEPARTMENT OF TRANSPORTATION

DIVISION OF ENGINEERING SERVICES STRUCTURE DESIGN
DESIGN BRANCH 1

BRIDGE NO. 09-0077
KILOMETER POST 56.8

SPANISH CREEK BRIDGE (REPLACE)
RAILING TYPE ST-20S DETAILS NO. 1

DS OSD 2147A (METRIC) (REV. X/XX/XX)

ORIGINAL SCALE IN MILLIMETERS FOR REDUCED PLANS 0 10 20 30 40 50 60 70 80 90 100

CU 02
EA 373101

DISREGARD PRINTS BEARING EARLIER REVISION DATES

REVISION DATES (PRELIMINARY STAGE ONLY) 05/22/09 06/19/09 9/24/09 9/23/09

SHEET 30 OF 55

USERNAME => trmikesl

DATE PLOTTED => 10-NOV-2009 TIME PLOTTED => 07:27

09-0077-u-rld101.dgn

DIST.	COUNTY	ROUTE	KILOMETER POST TOTAL PROJECT	SHEET NO.	TOTAL SHEETS
02	Plu	70	56.5/57.2	118	149

Caltrans Metric

Eric Watson 10/23/09
REGISTERED ENGINEER - CIVIL

11-2-09
PLANS APPROVAL DATE

REGISTERED PROFESSIONAL ENGINEER Eric Watson No. 64273 Exp. 6-30-11 CIVIL STATE OF CALIFORNIA

The State of California or its officers or agents shall not be responsible for the accuracy or completeness of electronic copies of this plan sheet.

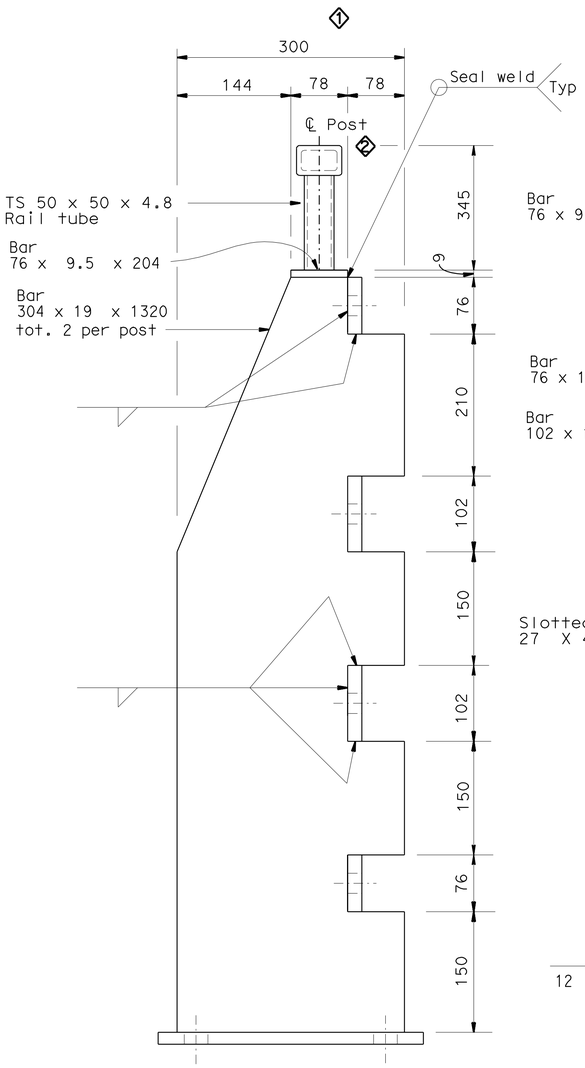

SECTION E-E

NO SCALE

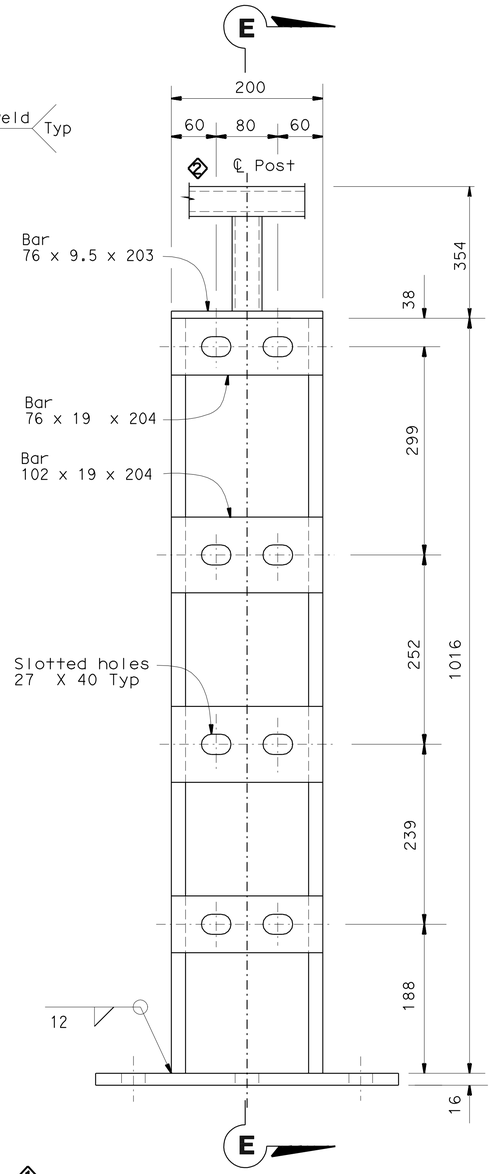

ELEVATION

NO SCALE

MATERIAL

A) All structural steel shall be A36, Structural tubing shall be A500 grade B except as noted.

B) All bolts shall be high strength conforming to ASTM A325 Galvanized and wrench tight.

C) Stud bolts shall be high strength ASTM A108 and torque to 136 N-m.

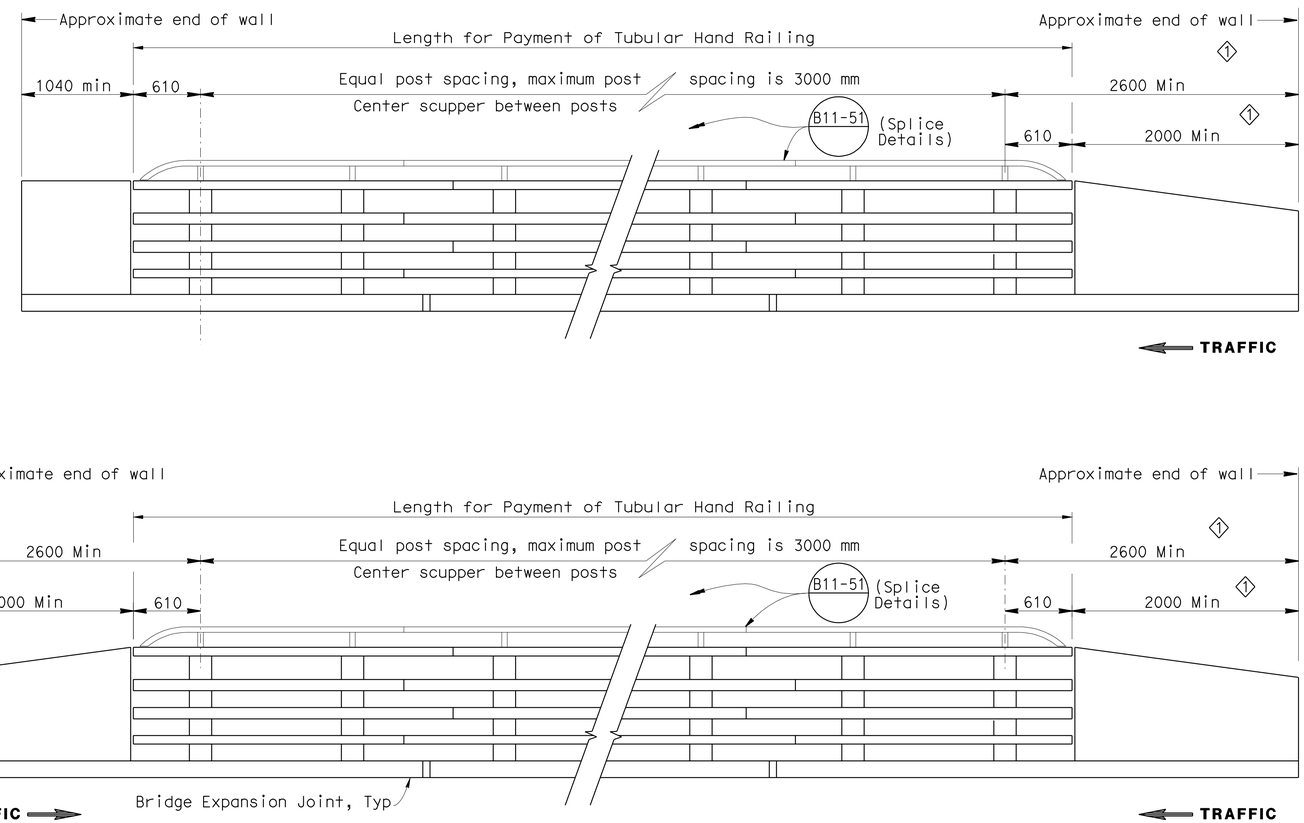

PROPOSED RAIL POST LAYOUT

SPECIAL DETAILS

ALL DIMENSIONS ARE IN MILLIMETERS UNLESS OTHERWISE SHOWN

STANDARD DRAWING				
RELEASE DATE REVISED	DESIGN	BY N ABDIN	CHECKED FELIX ALTAMIRANO	RELEASED BY
FILE NO. xs16-205-2	DETAILS	BY R YEE	CHECKED N ABDIN	OFFICE CHIEF
	SUBMITTED	BY N ABDIN	DRAWING DATE 10/20/04	

DS OSD 2147A (METRIC) (REV. X/XX/XX)

1 Revised Dimension
2 Revised Detail

STATE OF CALIFORNIA
DEPARTMENT OF TRANSPORTATION

DIVISION OF ENGINEERING SERVICES STRUCTURE DESIGN
DESIGN BRANCH 1

CU 02
EA 373101

BRIDGE NO. 09-0077
KILOMETER POST 56.8

SPANISH CREEK BRIDGE (REPLACE)
RAILING TYPE ST-20S DETAILS NO. 2

ORIGINAL SCALE IN MILLIMETERS FOR REDUCED PLANS 0 10 20 30 40 50 60 70 80 90 100

DISREGARD PRINTS BEARING EARLIER REVISION DATES

REVISION DATES (PRELIMINARY STAGE ONLY) 05/27/09 06/19/09 9/23/09 9/24/09 10/14/09 10/15/09

SHEET 31 OF 55

USERNAME => trmikesl

09-0077-u-rldt02.dgn

DATE PLOTTED => 10-NOV-2009 TIME PLOTTED => 07:27

DIST.	COUNTY	ROUTE	KILOMETER POST TOTAL PROJECT	SHEET NO.	TOTAL SHEETS
02	Plu	70	56.5/57.2	119	149

Caltrans Metric

Eric Watson 10/23/09
REGISTERED ENGINEER - CIVIL

11-2-09
PLANS APPROVAL DATE

REGISTERED PROFESSIONAL ENGINEER Eric Watson No. 64273 Exp. 6-30-11 CIVIL STATE OF CALIFORNIA

The State of California or its officers or agents shall not be responsible for the accuracy or completeness of electronic copies of this plan sheet.

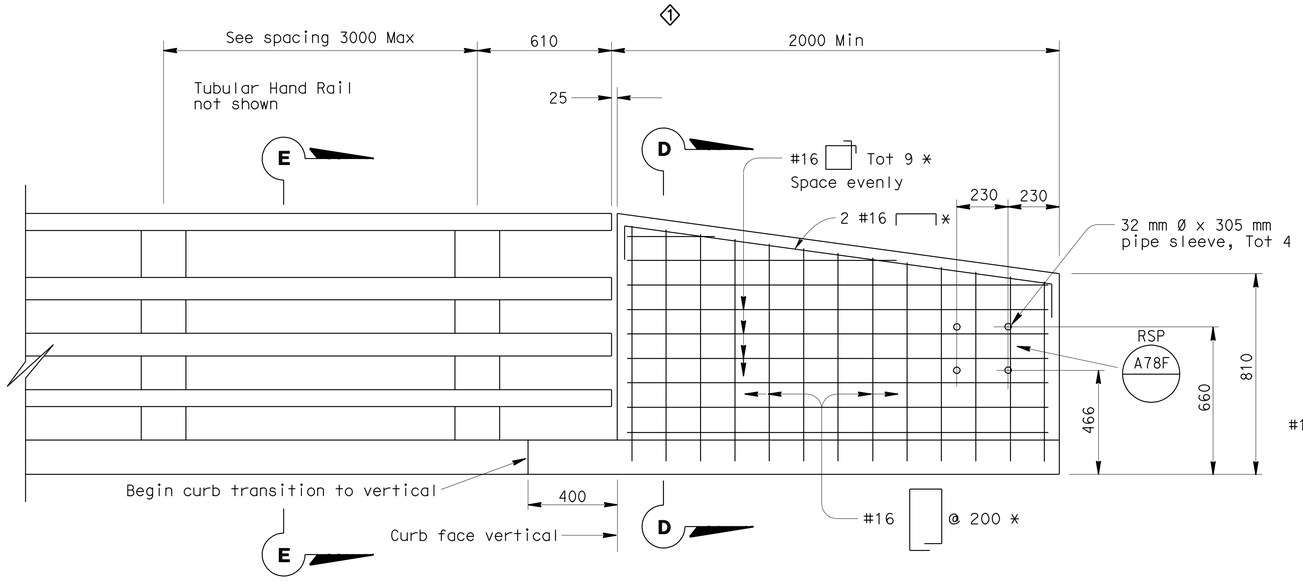

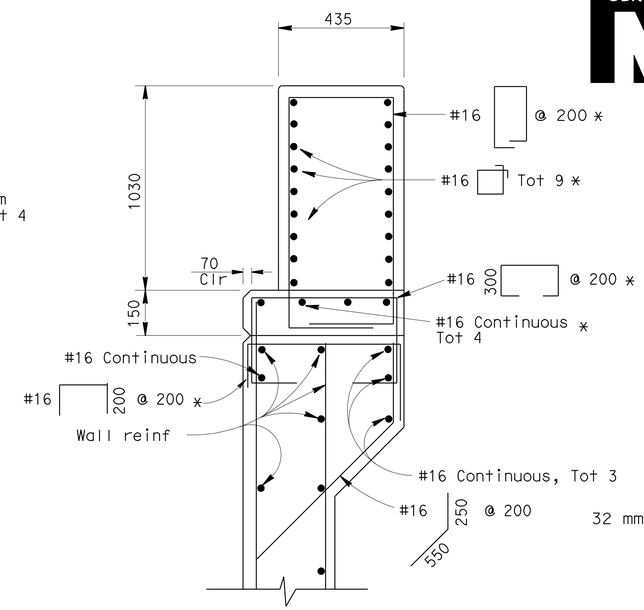

SECTION D-D

No scale

2 * - Indicates reinforcement to be epoxy coated

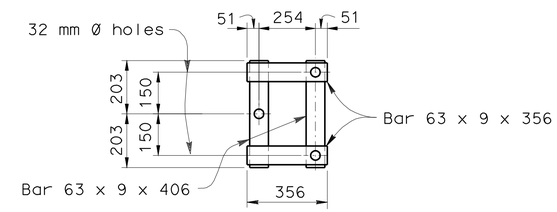

VIEW H-H

No scale

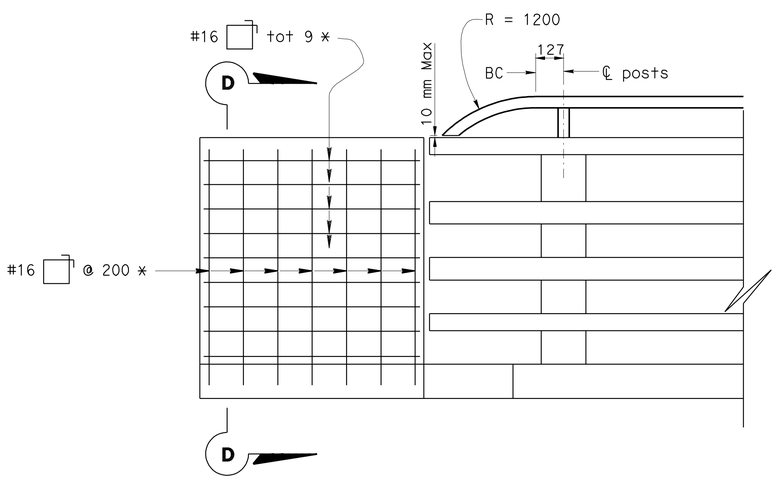

END OF RAILING ELEVATION

No scale

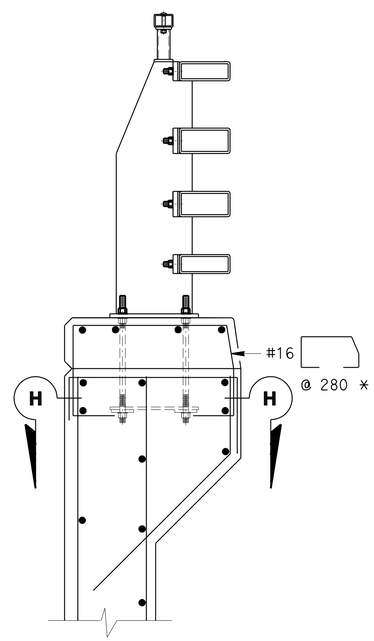

SECTION F-F

No scale
Reinf. same as for Section D-D except as noted

GENERAL NOTES

1) All structural steel shall be galvanized after fabrication.
2) Proposed railing layout shown is approximate. Final layout shall be reviewed by engineer before fabrication.
3) Venting and pick-up holes in rails and sleeves shall be shown on fabricator's shop plans.
4) Anchor bolts may be tack welded (shop or field) to anchorage.
5) All rough edges on posts and rails shall be ground smooth.
6) Tubing shall be bent or fabricated to fit horizontal curve when curve is less than 273 meters in radius.
7) After installation of rail, the exposed rail bolt threads shall be painted with two coats of zinc rich paint conforming to the requirement of section 75-1.05 galvanizing of The Standard Specifications.
8) The alternative welded splice may be used in lieu of The Standard Splice.
9) Each rail length shall be continuous over a minimum of two posts.
10) The fabricator shall check that the tubular sleeves splices conform to the dimensions indicated to assure proper clearance.
11) Except for expansion splices, not more than one splice shall be permitted per same side of post.
12) See contract plans for approach guardrail details.

SPECIAL DETAILS

ALL DIMENSIONS ARE IN MILLIMETERS UNLESS OTHERWISE SHOWN

STANDARD DRAWING

RELEASE DATE REVISED	DESIGN	BY N ABDIN	CHECKED FELIX ALTAMIRANO	RELEASED BY
FILE NO. xs16-205-3	DETAILS	BY R YEE	CHECKED FELIX ALTAMIRANO	Roberto Lucello OFFICE CHIEF
	SUBMITTED	BY N ABDIN	DRAWING DATE 10/20/04	

1 Revised Dimension
2 Added Note

STATE OF CALIFORNIA DEPARTMENT OF TRANSPORTATION

DIVISION OF ENGINEERING SERVICES STRUCTURE DESIGN
DESIGN BRANCH 1

BRIDGE NO. 09-0077
KILOMETER POST 56.8

SPANISH CREEK BRIDGE (REPLACE)
RAILING TYPE ST-20S DETAILS NO. 3

DS OSD 2147A (METRIC) (REV. X/XX/XX)

ORIGINAL SCALE IN MILLIMETERS FOR REDUCED PLANS 0 10 20 30 40 50 60 70 80 90 100

CU 02
EA 373101

DISREGARD PRINTS BEARING EARLIER REVISION DATES

REVISION DATES (PRELIMINARY STAGE ONLY) 05/23/08 06/13/08 9/22/08 9/23/08 10/13/08 10/15/09

SHEET 32 OF 55

USERNAME => trmikesl

09-0077-u-rldt03.dgn

DATE PLOTTED => 10-NOV-2009 TIME PLOTTED => 07:28

DIST.	COUNTY	ROUTE	KILOMETER POST TOTAL PROJECT	SHEET NO.	TOTAL SHEETS
02	Plu	70	56.5/57.2	120	149

Caltrans Metric

Eric Watson 10/23/09
REGISTERED ENGINEER - CIVIL

11-2-09
PLANS APPROVAL DATE

REGISTERED PROFESSIONAL ENGINEER Eric Watson No. 64273 Exp. 6-30-11 CIVIL STATE OF CALIFORNIA

The State of California or its officers or agents shall not be responsible for the accuracy or completeness of electronic copies of this plan sheet.

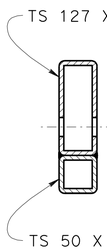

SECT H-H

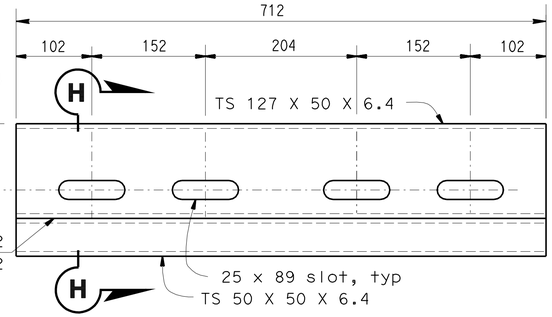

STANDARD SLEEVE DETAIL

(For TS 204 X 76 X 7.9 rail)
NO SCALE

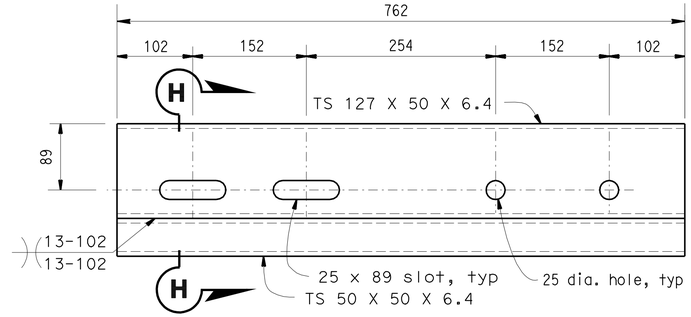

EXPANSION SLEEVE DETAIL

(For TS 204 X 76 X 7.9 rail)
NO SCALE

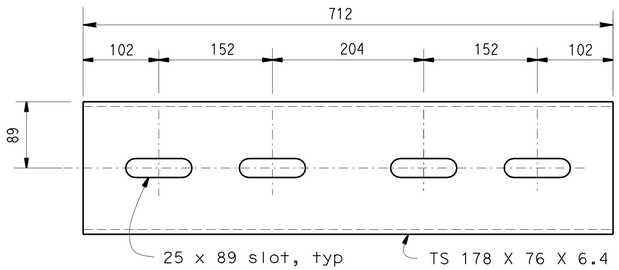

STANDARD SLEEVE DETAIL

(For TS 204 X 102 X 7.9 rail)
NO SCALE

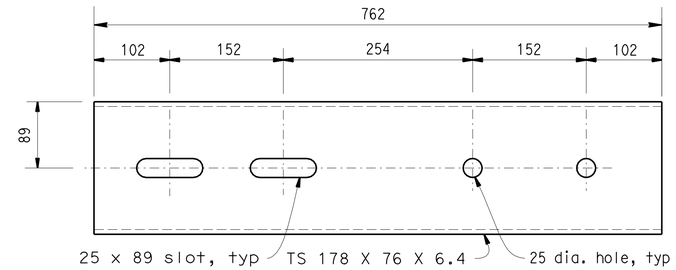

EXPANSION SLEEVE DETAIL

(For TS 204 X 102 X 7.9 rail)
NO SCALE

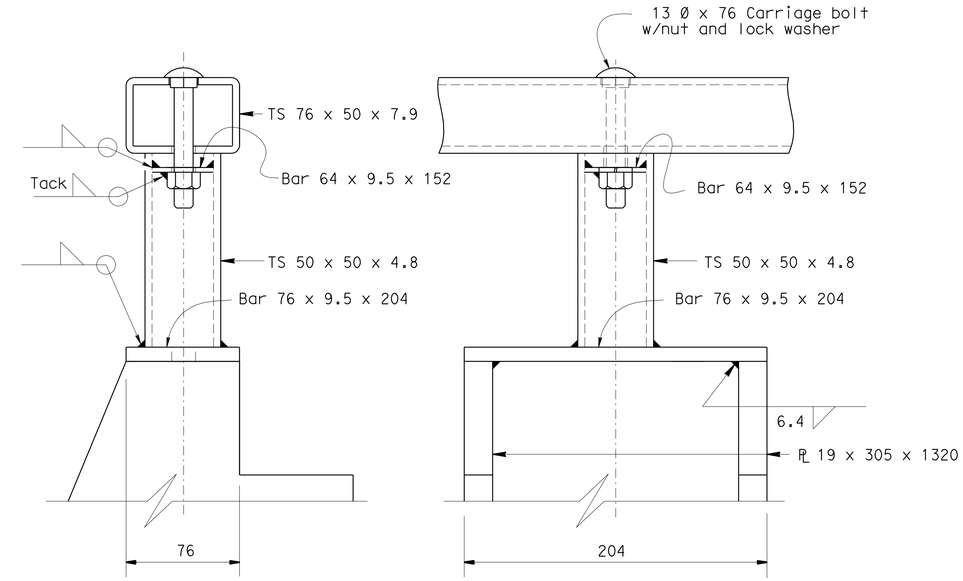

RAIL CONNECTION DETAILS ①

NO SCALE

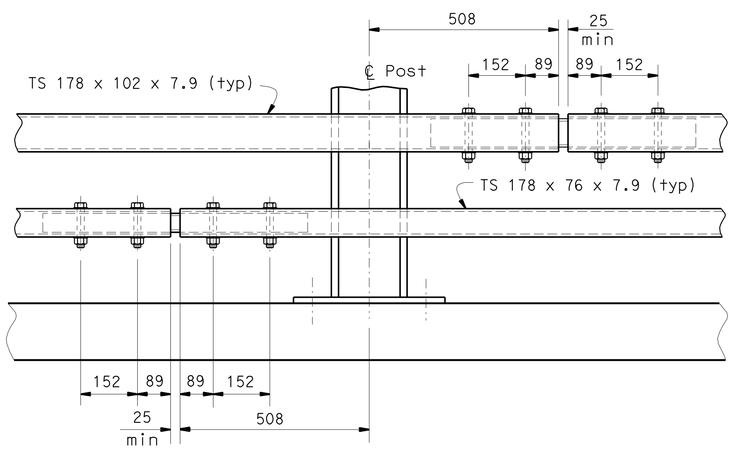

STANDARD SPLICE

NO SCALE

Use 19 Ø x 134 (top rail)
and 19 Ø x 108 (bottom rail)
HS bolts with washers,
25 Ø holes in rail (typ)
Top 2 rails not shown for clarity.
For Tubular Hand Rail splice, see B11-51

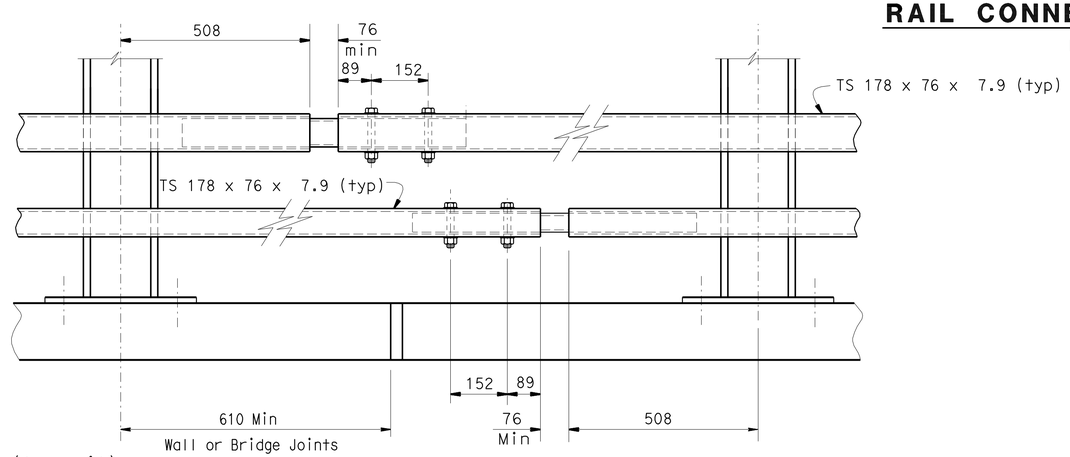

EXPANSION SPLICE ①

NO SCALE

SPECIAL DETAILS

ALL DIMENSIONS ARE IN
MILLIMETERS UNLESS OTHERWISE SHOWN

STANDARD DRAWING

RELEASE DATE	REVISED	DESIGN	BY N ABDIN	CHECKED FELIX ALTAMIRANO	RELEASED BY
FILE NO.	xs16-205-4	DETAILS	BY R YEE	CHECKED FELIX ALTAMIRANO	OFFICE CHIEF
		SUBMITTED	BY N ABDIN	DRAWING DATE 10/20/04	

① Modified Detail

STATE OF CALIFORNIA
DEPARTMENT OF TRANSPORTATION

DIVISION OF ENGINEERING SERVICES STRUCTURE DESIGN
DESIGN BRANCH 1

BRIDGE NO. 09-0077
KILOMETER POST 56.8

SPANISH CREEK BRIDGE (REPLACE)
RAILING TYPE ST-20S DETAILS NO. 4

DS OSD 2147A (METRIC) (REV. X/XX/XX)

ORIGINAL SCALE IN MILLIMETERS FOR REDUCED PLANS 0 10 20 30 40 50 60 70 80 90 100

CU 02
EA 373101

DISREGARD PRINTS BEARING EARLIER REVISION DATES

REVISION DATES (PRELIMINARY STAGE ONLY) 05/21/09 06/19/09 9/23/09 9/24/09

SHEET 33 OF 55

USERNAME => trmikesl

09-0077-u-rldt04.dgn

DATE PLOTTED => 10-NOV-2009 TIME PLOTTED => 07:28

DIST.	COUNTY	ROUTE	KILOMETER POST TOTAL PROJECT	SHEET NO.	TOTAL SHEETS
02	Plu	70	56.5/57.2	121	149

Caltrans Metric

Eric Watson 10/23/09
REGISTERED ENGINEER - CIVIL

11-2-09
PLANS APPROVAL DATE

REGISTERED PROFESSIONAL ENGINEER Eric Watson No. 64273 Exp. 6-30-11 CIVIL STATE OF CALIFORNIA

The State of California or its officers or agents shall not be responsible for the accuracy or completeness of electronic copies of this plan sheet.

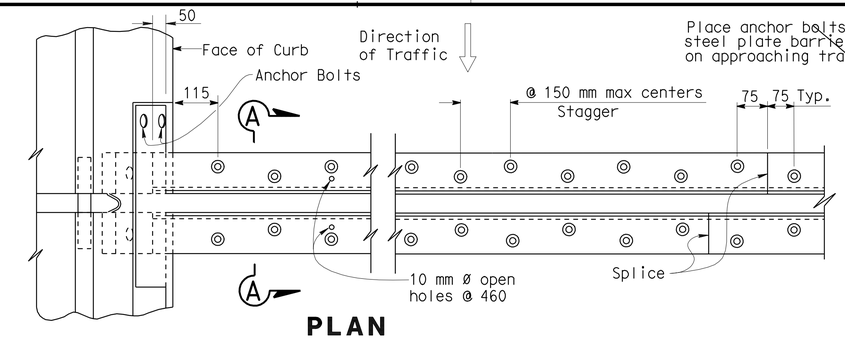

PLAN
BOLT & PLATE LAYOUT ◇2

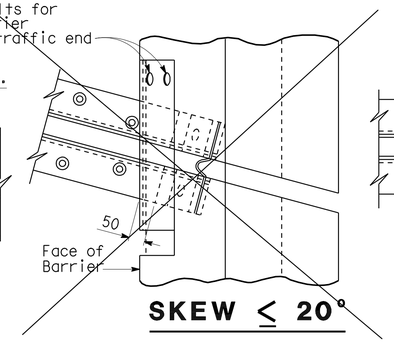

SKEW ≤ 20°

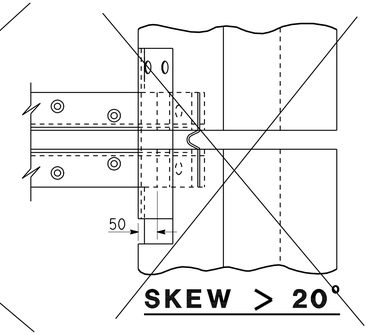

SKEW > 20°

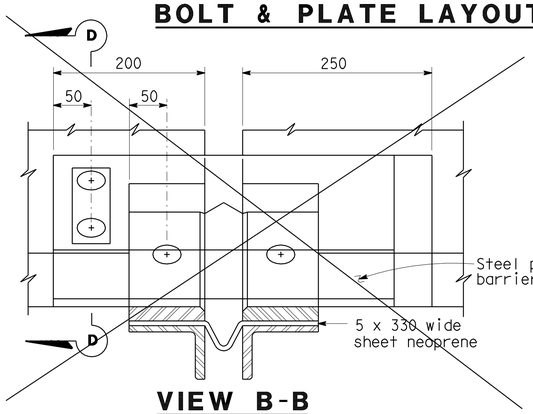

VIEW B-B

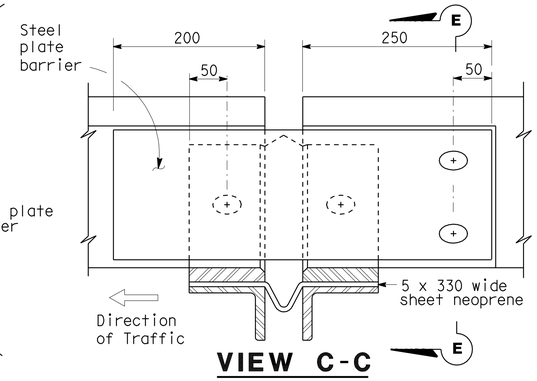

VIEW C-C ◇2

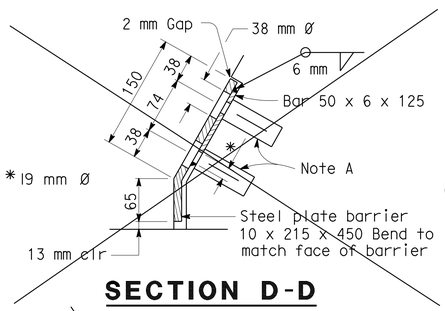

SECTION D-D

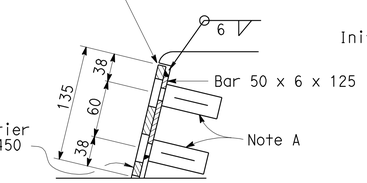

SECTION E-E

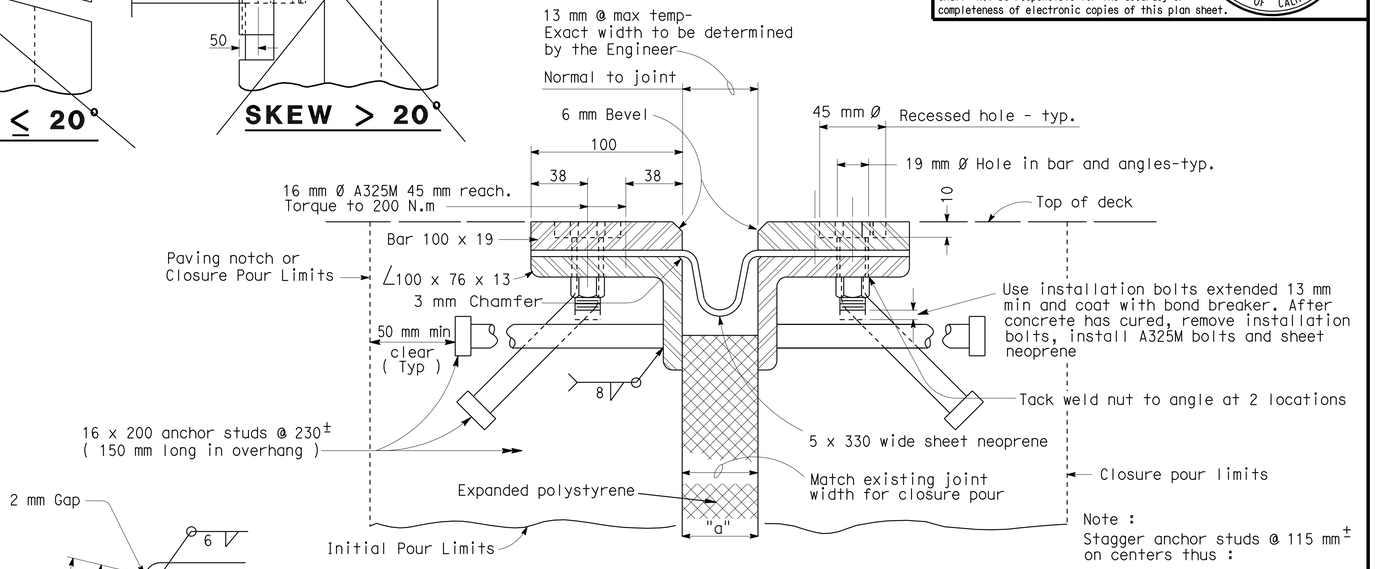

SECTION A-A

Note :
Stagger anchor studs @ 115 mm± on centers thus :

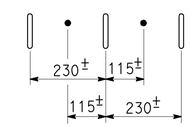

Joint Information			"a" Dimensions		
Location	Movement Rating (MR)	Skew	Winter	Spring & Fall	Summer
Abut 1	90	0°	85	64	43
Abut 8	90	0°	85	64	43

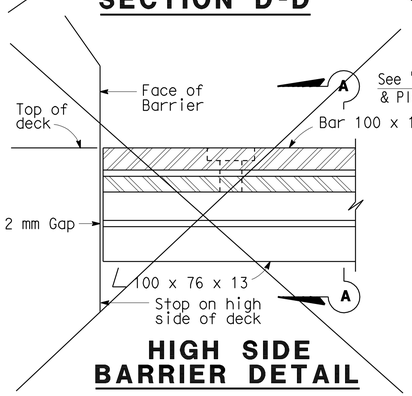

HIGH SIDE BARRIER DETAIL

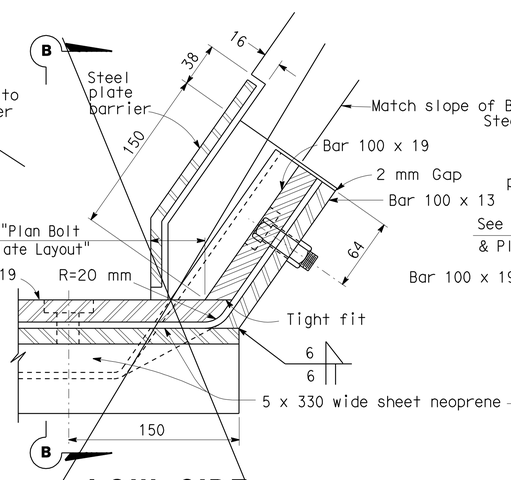

LOW SIDE BARRIER DETAIL
(See Note B)

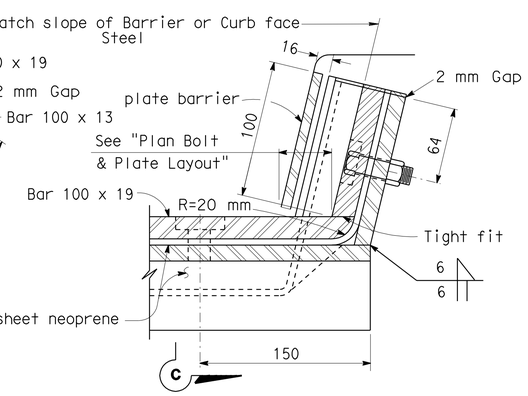

CURB DETAIL ◇2
(See Note B)

NOTES:

Full penetration butt welds may be substituted for fillet welds on all anchor studs.

Alternate types of anchor studs may be permitted subject to the approval by the Engineer.

Joint seal assembly to be used in conjunction with closure pour. (See other sheets for limits). Closure pour shall not be placed until final deck surface is within the tolerance specified.

Use joint at crown of roadway, at any change in transverse slope in deck and at changes in horizontal direction. Place other joints at or near lanes. All metal parts to be painted or galvanized after fabrication.

Sheet neoprene shall be fabricated in one continuous piece or joints shall be vulcanized. Neoprene shall be fabricated to bend around corners. 25 mm holes in neoprene sheets shall be drilled or punched so that the neoprene is not distorted at the time of installation.

NOTE A

Insert assembly or expansion anchorage for 16 x 45 A325M bolt.

NOTE B

Use Curb Detail at all barrier joints. ◇1

Special Details

ALL DIMENSIONS ARE IN MILLIMETERS UNLESS OTHERWISE SHOWN

NO SCALE

STANDARD DRAWING

RELEASE DATE	Revised	DESIGN	BY H. HERR	CHECKED R. LACALLE	RELEASED BY
		DETAILS	BY R. YEE	CHECKED R. LACALLE	
FILE NO.	xs8-010	SUBMITTED	BY C.W. PURKISS	DRAWING DATE 9/93	OFFICE CHIEF

◇1 Revised note
◇2 - Detail modified

STATE OF CALIFORNIA
DEPARTMENT OF TRANSPORTATION

DIVISION OF ENGINEERING SERVICES
STRUCTURE DESIGN
DESIGN BRANCH 1

BRIDGE NO. 09-0077
KILOMETER POST 56.8

SPANISH CREEK BRIDGE (REPLACE)
JOINT SEAL ASSEMBLY (MAXIMUM MOVEMENT RATING = 100 mm)

DS OSD 2147A (METRIC) (REV. 2/25/97)

ORIGINAL SCALE IN MILLIMETERS FOR REDUCED PLANS 0 10 20 30 40 50 60 70 80 90 100

CU 02
EA 373101

DISREGARD PRINTS BEARING EARLIER REVISION DATES

REVISION DATES (PRELIMINARY STAGE ONLY) 5-08-06 6-21-06 05/22/06 06/19/06 09/27/06 09/23/09

SHEET 34 OF 55

USERNAME => trmikesl

09-0077-u-sldt.dgn

DATE PLOTTED => 10-NOV-2009 TIME PLOTTED => 07:28

DIST	COUNTY	ROUTE	KILOMETER POST TOTAL PROJECT	SHEET No	TOTAL SHEETS
02	Pla	70	56.5/57.2	122	149

REGISTERED CIVIL ENGINEER 7-9-09

11-2-09
PLANS APPROVAL DATE

REGISTERED PROFESSIONAL ENGINEER KENNETH G. SORENSEN No. GE 2520 Exp. 9-30-10 GEOTECHNICAL STATE OF CALIFORNIA

The State of California or its officers or agents shall not be responsible for the accuracy or completeness of electronic copies of this plan sheet.

KLEINFELDER INC.
3077 FITE CIR.
SACRAMENTO, CA 95826

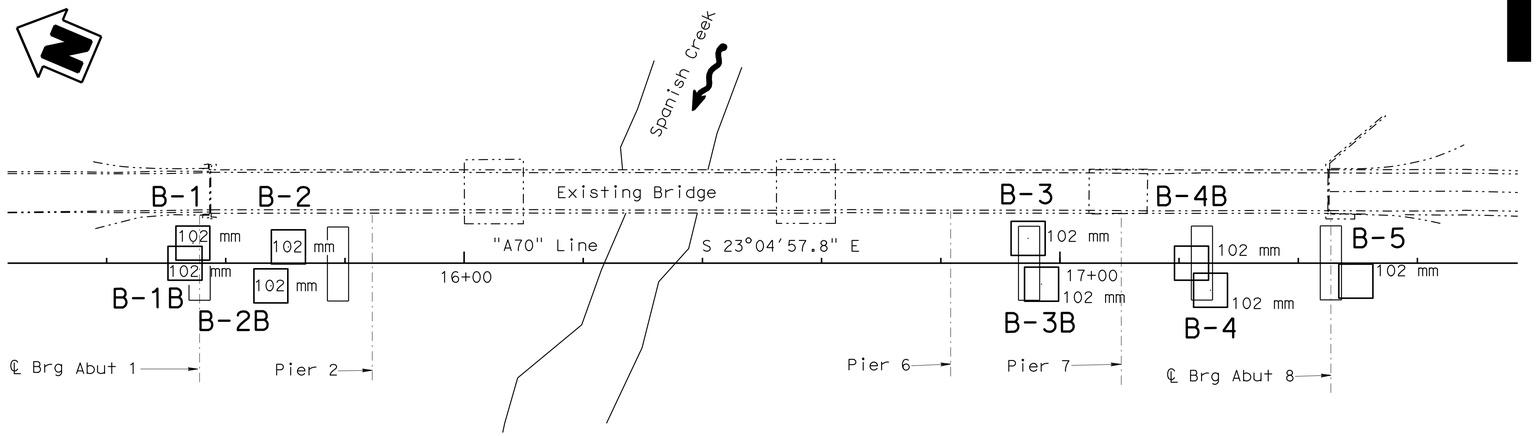

PLAN
1:400

Notes:

1. The descriptions and classifications of soil, including consistency and relative density descriptors, used by the field personnel for the exploration boreholes shown on these sheets are based on the "Soil and Rock Logging Classification Manual (Field Guide)", Engineer Service Center, Office of Structural Foundations, August 1996.
2. All borings were advanced using a self-casing 102 mm wireline drill system.
3. A Donut hammer (63.5 kg) with a 760 mm drop (rope and cathead system) was used to advance the sampler.
4. Blowcounts noted for boring are field blowcounts and have not been corrected. Blowcounts 50/125 means 50 blows per 125 mm penetration.
5. 51 mm samples were taken using a California split-barrel sampler with an inside diameter (I.D.) of 51 mm and an outside diameter (O.D.) of 64 mm.
6. 35 mm samples were taken using a SPT split-barrel sampler with an inside diameter (I.D.) of 35 mm and an outside diameter (O.D.) of 51 mm.
7. 63.5 mm core samples were taken using an HQ core sampler with a 63.5 mm inside diameter (I.D.) and 94 mm outside diameter (O.D.) core barrel.
8. Ground water levels indicated on the Log of Test Borings (LOTB) sheets reflect the measured ground water levels in the open borehole or piezometer on the specified date. Ground water surface elevations are subject to seasonal fluctuations and will be encountered at higher or lower elevations depending upon conditions at time of construction.
9. All borings except B-2, B-2B, B3 and B4 were backfilled with grout immediately after completion of drilling.
10. A piezometer composed of slotted PVC well pipe with well sand in the annulus was installed the full length in each of the boreholes of Borings B-2, B-3 and B-4.
11. R-ratings of rock presented on the logs follow the ISRM Intact Rock Strength Criteria (Hoek, 2007).

BENCHMARKS

STATION	OFFSET	N	E	ELEV	DESCRIPTION
15+79.190	4.62 Rt	618564.792	2062442.621	44.552	

SURVEY CONTROL
1. Coordinates bearing and distances are based on the California coordinate system of Nad 1983 HPGN, zone 6. (EPOCH 1991.35). Elevations are based on NGVD 29.

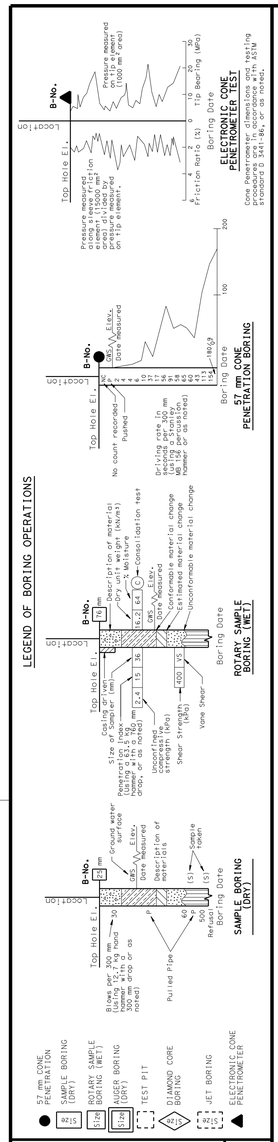

LEGEND OF EARTH MATERIALS

GRAVEL, SAND, SILT, CLAY, SANDY CLAY or CLAYEY SAND, SANDY SILT or SILTY SAND, SILTY CLAY, CLAYEY SILT, PEAT and/or ORGANIC MATTER, FILL MATERIAL, COBBLE, IGNEOUS ROCK, SEDIMENTARY ROCK, METAMORPHIC

CONSISTENCY CLASSIFICATION FOR SOILS

According to the Standard Penetration Test

SPT N-Value (Blows/0.3m)	Granular	SPT N-Value (Blows/0.3m)	Cohesive
0-4	Very Loose	<2	Very Soft
5-10	Loose	2-4	Soft
11-30	Medium Dense	5-8	Firm
31-50	Dense	9-15	Stiff
>50	Very Dense	16-30	Very stiff
		>31	Hard

NOTE: Classification of earth material as shown on this sheet is based upon field inspection and is not to be construed to imply mechanical analysis.

Doug Brittsan DESIGN OVERSIGHT	DRAWN BY	A. Sanchez	Kleinfelder Inc. FIELD INVESTIGATION BY:
9-17-09 SIGN OFF DATE	CHECKED BY	P. Holland, CEG	DATE: July-Sept 2006

PREPARED FOR THE STATE OF CALIFORNIA DEPARTMENT OF TRANSPORTATION

DIVISION OF ENGINEERING SERVICES STRUCTURE DESIGN
DESIGN BRANCH 1

BRIDGE NO. 09-0077
KILOMETER POST 56.8

SPANISH CREEK BRIDGE (REPLACE)

LOG OF TEST BORINGS 1 OF 21

CIVIL LOG OF TEST BORINGS SHEET (METRIC) (REV. 2/1/00)

ORIGINAL SCALE IN MILLIMETERS FOR REDUCED PLANS 0 10 20 30 40 50 60 70 80 90 100

CU 02
EA 373101

DISREGARD PRINTS BEARING EARLIER REVISION DATES

REVISION DATES (PRELIMINARY STAGE ONLY) 12-8-06 7-9-09 9-17-09 09/22/09

SHEET 35 OF 55

FILE => 09-0077-z-ltb01.dgn

USERNAME => trmikest DATE PLOTTED => 10-NOV-2009 TIME PLOTTED => 07:29

CIVIL LOG OF TEST BORINGS SHEET (METRIC) (REV. 2/1/00)

CONSISTENCY CLASSIFICATION FOR SOILS

According to the Standard Penetration Test

SPT N-Value (Blows/ 0.3m)	Granular	SPT N-Value (Blows/ 0.3m)	Cohesive
0-4	Very Loose	<2	Very Soft
5-10	Loose	2-4	Soft
11-30	Medium Dense	5-8	Firm
31-50	Dense	9-15	Stiff
>50	Very Dense	16-30	Very stiff
		>31	Hard

NOTE: Classification of earth material as shown on this sheet is based upon field inspection and is not to be construed to imply mechanical analysis.

LEGEND OF EARTH MATERIALS

GRAVEL, SAND, SILT, CLAY, SANDY CLAY or CLAYEY SAND, SANDY SILT or SILTY SAND, SILTY CLAY, CLAYEY SILT, PEAT and/or ORGANIC MATTER, FILL MATERIAL, COBBLE, IGNEOUS ROCK, SEDIMENTARY ROCK, METAMORPHIC

LEGEND OF BORING OPERATIONS

57 mm CONE PENETRATION; SAMPLE BORING (DRY); ROTARY SAMPLE BORING (WET); AUGER BORING (DRY); TEST PIT; DIAMOND CORE BORING; JET BORING; ELECTRONIC CONE PENETROMETER

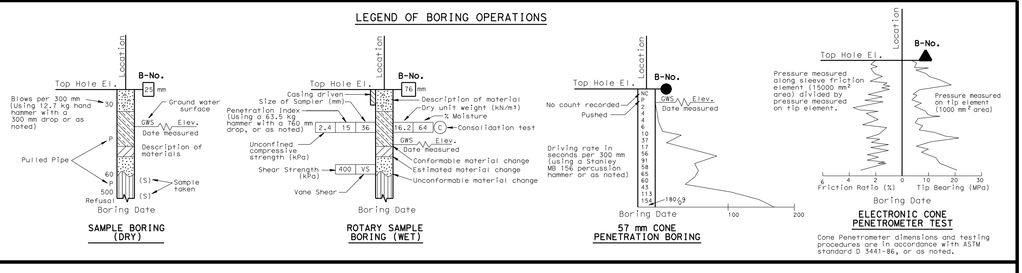

FOR PLAN VIEW AND ADDITIONAL NOTES, SEE "LOG OF TEST BORINGS" SHEET 1 OF 21

3.4m Lt Sta. 15+54.48
"A70" Line

B-1

102 mm

Elev 972.068

TERRACE DEPOSIT SANDY SILT with GRAVEL (ML): stiff, reddish brown, dry, angular, fine gravel, nonplastic, fine sand.
-moist, weathered slate/phyllite gravel.
-very stiff, increased gravel percentage.
-soft.
TERRACE DEPOSIT GRAVELLY SILT (ML): very stiff, reddish brown, dry, angular, fine gravel, nonplastic, fine sand.

96 mm

METASEDIMENTARY META SANDSTONE: light brown, intensely weathered, moderately soft (R1), intensely fractured, thinly foliated 60°-70° dip, slightly rough fracture surfaces with dark brown weathering, minor clay infill, breaks easily along foliation.
-very intensely fractured.
METASEDIMENTARY PHYILLITE: gray to dark gray, intensely weathered, soft to moderately soft (R0-R1), very intensely to intensely fractured, thinly foliated 60°-70° dip, fractures randomly oriented, slightly to moderately rough surface with brown weathering stains, breaks easily along foliation, abundant mica grains parallel to foliation.
-70° foliation dip.
METASEDIMENTARY PHYILLITE: gray and light brown, intensely to moderately weathered, moderately hard (R1), intensely to moderately fractured, fractures randomly oriented, slightly to moderately rough surface with brown weathering stains, fine sand, trace elongated gravel clasts, trace quartz veins normal to foliation, very thinly foliated, dips 70°-75°, breaks easily along foliation.
-moderately weathered, hard (R2), moderately fractured, fractures randomly oriented, minor clay infilling along foliation, yellow-brown weathering on foliation and fracture surfaces.
METASEDIMENTARY PHYLLITE: gray, moderately weathered, hard (R2), moderately fractured, very thinly foliated, dips 70°-75°, smooth to polished foliation surfaces, fractures have minor clay infilling, moderately to slightly rough surface, weathered to yellow-brown, abundant quartz veins to 3mm thick, 50° to 90° dip.
-FRACTURE ZONE 23-25M: gray, intensely weathered, moderately soft to soft (R0-R1), moderately fractured, 10-15% clay, rock easily breaks up into small pieces 1-4cm along foliation.
METASEDIMENTARY PHYLLITE: brown-gray, intensely to moderately weathered, moderately hard (R1), randomly oriented, minor clay infilling, moderately rough surfaces, very thinly foliated, smooth foliation surface, breaks easily along foliation.
METASEDIMENTARY PHYLLITE: gray-brown, intensely weathered, moderatly soft to soft (R0-R1), intensely fractured, randomly oriented fractures, moderately rough to rough surface, laminated, smooth to polished surface.
-29.3-29.6 M - approximately 10-15% fine sand.
-graphitic texture, very soft, polished laminated surfaces.
METASEDIMENTARY META SANDSTONE: bluish gray, moderately to slightly weathered, moderately hard to hard (R1-R2), intensely to moderately fractured, fractures randomly oriented, slightly to moderately rough surfaces, very thinly foliated, 70-90° dip, smooth foliation surface, fine grained, <5% quatrz veins up to 1cm thick, fractures randomly oriented.
-85°-90° foliation dip.
METASEDIMENTARY PHYLLITE: gray, moderately to slightly weathered, soft to moderately hard (R-1), intensely fractured, randomly oriented fractures, rough surface, no infilling, laminated, 65°-80° dip, smooth to polished surface, graphitic texture.
-Shear - infilled with gray clay and phyllite rock fragments, soft, medium plasticity.
METASEDIMENTARY PHYLLITE: dark gray, moderately weathered, moderately hard (R1), intensely to moderately fractured, randomly oriented fractures, rough surfaces, no infilling, laminated, dips 65°-85°, smooth to polished surface, graphitic texture.
-shear - approximately 25mm thick, clay, parallel to foliation, soft, medium plasticity.
METASEDIMENTARY META SANDSTONE: gray, fresh to slightly weathered, hard (R2), moderately fractured, fine grained, intensely foliated, foliation 60°-85° dip, polished to smooth surfaces, fractures range from 10°-25° dip, slightly rough to smooth surface, no infilling, some quartz veins to 3mm thick.
-less intensely foliated.

ELEVATION (m): 978, 975, 972, 969, 966, 963, 960, 957, 954, 951, 948, 945, 942, 939, 936, 933, 930, 927, 924, 921, 918, 915

7/10/2006

15+40 15+60 15+80 16+00 16+20 16+40 16+60 16+80

PROFILE
HOR. 1:500
VER. 1:100

Doug Brittsan	DESIGN OVERSIGHT
9-17-09	SIGN OFF DATE
A. Sanchez	DRAWN BY
P. Holland, CEG	CHECKED BY
Kleinfelder Inc.	FIELD INVESTIGATION BY:
July-Sept 2006	DATE:

ORIGINAL SCALE IN MILLIMETERS FOR REDUCED PLANS 0 10 20 30 40 50 60 70 80 90 100

PREPARED FOR THE STATE OF CALIFORNIA DEPARTMENT OF TRANSPORTATION

DIVISION OF ENGINEERING SERVICES STRUCTURE DESIGN

DESIGN BRANCH 1

CU 02 EA 373101

FILE => 09-0077-z-ttb02.dgn

DISCARD PRINTS BEARING EARLIER REVISION DATES

REVISION DATES (PRELIMINARY STAGE ONLY)
12-8-06
3-2-09
9-3-09
09/02/09

BRIDGE NO. 09-0077

KILOMETER POST 56.8

SPANISH CREEK BRIDGE (REPLACE)

LOG OF TEST BORINGS 2 OF 21

SHEET 36 OF 55

Caltrans Metric

REGISTERED CIVIL ENGINEER 7-9-09

11-2-09
PLANS APPROVAL DATE

The State of California or its officers or agents shall not be responsible for the accuracy or completeness of electronic copies of this plan sheet.

REGISTERED PROFESSIONAL ENGINEER KENNETH G. SORENSEN No. GE 2520 Exp. 9-30-10 GEOTECHNICAL STATE OF CALIFORNIA

KLEINFELDER INC.
3077 FITE CIR.
SACRAMENTO, CA 95826

DIST	COUNTY	ROUTE	KILOMETER POST TOTAL PROJECT	SHEET No	TOTAL SHEETS
02	Pla	70	56.5/57.2	123	149

USERNAME => trmikesl DATE PLOTTED => 10-NOV-2009 TIME PLOTTED => 07:29

CIVIL LOG OF TEST BORINGS SHEET (METRIC) (REV. 2/1/00)

CONSISTENCY CLASSIFICATION FOR SOILS

According to the Standard Penetration Test

SPT N-Value (Blows/ 0.3m)	Granular	SPT N-Value (Blows/ 0.3m)	Cohesive
0-4	Very Loose	<2	Very Soft
5-10	Loose	2-4	Soft
11-30	Medium Dense	5-8	Firm
31-50	Dense	9-15	Stiff
>50	Very Dense	16-30	Very stiff
		>31	Hard

NOTE: Classification of earth material as shown on this sheet is based upon field inspection and is not to be construed to imply mechanical analysis.

LEGEND OF EARTH MATERIALS

GRAVEL, SAND, SILT, CLAY, SANDY CLAY or CLAYEY SAND, SANDY SILT or SILTY SAND, SILTY CLAY, CLAYEY SILT, PEAT and/or ORGANIC MATTER, FILL MATERIAL, COBBLE, IGNEOUS ROCK, SEDIMENTARY ROCK, METAMORPHIC

LEGEND OF BORING OPERATIONS

57 mm CONE PENETRATION; SAMPLE BORING (DRY); ROTARY SAMPLE BORING (WET); AUGER BORING (DRY); TEST PIT; DIAMOND CORE BORING; JET BORING; ELECTRONIC CONE PENETROMETER

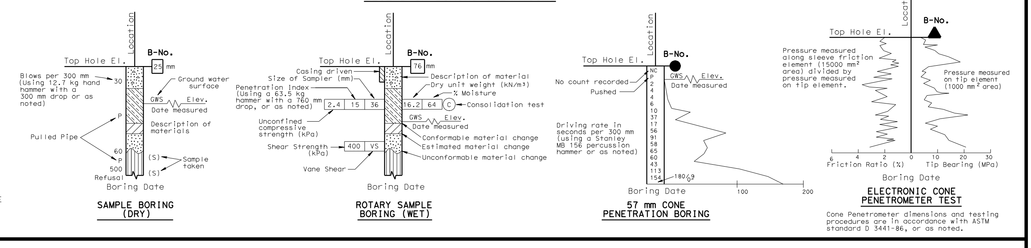

FOR PLAN VIEW AND ADDITIONAL NOTES, SEE "LOG OF TEST BORINGS" SHEET 1 OF 21

Sta. 15+53.16
"A70" Line

B-1B

Drilled at 57° from horizontal in S21E direction

102 mm

Elev 971.721

0.9 mm

TERRACE DEPOSIT SANDY lean CLAY with GRAVEL (CL): stiff to very stiff, reddish brown, fine to coarse sand, low plasticity, rounded gravel, cobbles, and boulders.

-cobbles and boulders of meta-andesite and greenstone, red-brown soil matrix, clasts are very hard, slightly weathered.

METASEDIMENTARY PHYLLITE: olive-brown, intensely weathered to decomposed, soft to very soft (R0), laminated, about 15% clay and silt, some zones weathered into a clayey gravel, very intensely fractured, randomly oriented, rough, some clay infilling, manganese staining on surfaces.

-rock is coarser grained (fine grained), less fines.

METASEDIMENTARY META SANDSTONE: brown and light brown, intensely weathered to decomposed, soft (R0-R1), intensely fractured, very thinly foliated, breaks easily along foliation, inclinations approximately 75 to 85°.

-fracture approx. 45° inclination, smooth surface, no infill.

-fracture approx. 35° inclination, smooth surface, no infill.

-very intensely fractured, randomly oriented.

-13.7M; moderately strong, less intensely fractured, foliation inclination approximately 45°.

METASEDIMENTARY PHYLLITE: olive-brown, intensely weathered to decomposed, soft (R0), very thinly foliated, inclinations approximately 45-55°, breaks easily along foliation, smooth to polished surface, very intensely fractured, randomly oriented, minor clay infilling, smooth to rough surfaces.

-10cm lense of metasandstone.

-foliation 70 to 80° inclination.

-moderately weathered, moderately soft (R1), trace quartz veins.

METASEDIMENTARY META CONGLOMERATE: gray-brown, intensely weathered, moderately soft (R1), moderately fractured, very thinly foliated, inclinations 70°-75°, breaks easily along foliation, smooth surfaces, pebbles and gravels are stretched parallel to foliation, clasts to 76mm long.

-quartz veins, 1cm thick.

-Shear Zone: decomposed, soft, intensely foliated, about 15-20% clay, parallel to subparallel to foliation.

-clasts and lenses streatched and sheared, abundant microshears.

-foliation 70-80°.

-moderately hard, foliation 90° inclination.

-foliation 75° inclination, fracture approximately 55° inclination, smooth surface.

-foliation 82° inclination.

METASEDIMENTARY META SANDSTONE: gray, slightly weathered to fresh, hard (R3), very thinly foliated.

-fracture approximately 50° inclination, rough surface, brown mineralization.

-fracture approximately 50° inclination, rough surface. quartz veins 2cm thick, folded and random.

METASEDIMENTARY PHYLLITE: dark gray, slightly weathered, moderately soft to soft (R0-R1), laminated 75° inclination, breaks easily along foliation, polished surfaces, intensely fractured, randomly oriented, smooth to rough surfaces.

-pebbles and gravels stretched and sheared, contact 65° truncates foliation.

METASEDIMENTARY META SANDSTONE: gray, fresh, hard (R3), moderately fractured, thinly foliated, smooth to polished surfaces, fine grained, lithic rich, graphitic texture.

-fracture approximately 45° inclination, rough surface.

-foliation 75° inclination.

-abundant stretched and sheared pebbles and gravels.

METASEDIMENTARY META SANDSTONE: gray, moderately weathered, hard (R3), very thinly foliated 70-90° inclination, smooth surface, graphictic texture, fine grained, lithic rich.

METASEDIMENTARY PHYLLITE: gray, slightly weathered, moderately hard (R2), laminated, approximately 80-90° inclination, polished surfaces, graphitic texture, intensely fractured, randomly oriented, no infill, minor weathering of surface.

-fracture 5° inclination, rough surface, no infill, no weathering.

-fracture 5° inclination, rough surface, no infill, no weathering.

Shear Zone: Brecciated Phyllite in soft clay matrix (40%), moderate plasticity, no indication of direction of movement, no inclination angle due to fractured rock on either side of shear.

-less clay.

METASEDIMENTARY PHYLLITE: gray, slightly weathered, moderately hard (R2), laminated, approximately 80-90° inclination, polished surfaces, graphitic texture, intensely fractured, randomly oriented.

Shear Zone: Brecciated Phyllite fragments in stiff clay matrix (10-20%), shear is parallel to foliation (approximately 80° inclination).

METASEDIMENTARY PHYLLITE: gray, slightly weathered, moderately hard (R2), laminated, approximately 80-90° inclination, polished surfaces, graphitic texture, intensely fractured, randomly oriented.

-fracture 10° inclination, rough surface, no infill, no weathering.

-fracture 80° inclination, smooth surface, no infill, no weathering.

-fracture 65° inclination, smooth, no infill, no weathering, truncates foliation.

METASEDIMENTARY META SANDSTONE: gray, fresh, moderately hard to hard (R2-R3), very thinly foliated, polished surfaces, fine grained, lithic rich, trace white quartz veins <1mm that trend across foliation.

-fracture 68° inclination, smooth surface, no infill.

-fracture 18° inclination, smooth surface, no infill.

-fracture 55° inclination, smooth surface, no infill.

-contact 70°.

METASEDIMENTARY PHYLLITE: gray, slightly weathered, moderately hard (R2), intensely fractured, laminated, approximately 80-90° inclination, polished surfaces, graphitic texture, randomly oriented.

7/10/2006

DEPTH (m): 0, 3, 6, 9, 12, 15, 18, 21, 24, 27, 30, 33, 36, 39, 42, 45, 48, 51, 54, 57, 60, 63

15+40 15+60 15+80 16+00 16+20 16+40 16+60 16+80

PROFILE

HOR. 1:500
VER. 1:100

Doug Brittsan
DESIGN OVERSIGHT
9-17-09
SIGN OFF DATE

DRAWN BY A. Sanchez
CHECKED BY P. Holland, CEG

Kleinfelder Inc.
FIELD INVESTIGATION BY:
DATE: July-Sept 2006

ORIGINAL SCALE IN MILLIMETERS FOR REDUCED PLANS

PREPARED FOR THE STATE OF CALIFORNIA DEPARTMENT OF TRANSPORTATION

DIVISION OF ENGINEERING SERVICES STRUCTURE DESIGN

DESIGN BRANCH 1

CU 02
EA 373101

BRIDGE NO. 09-0077
KILOMETER POST 56.8

DISCARD PRINTS BEARING EARLIER REVISION DATES

REVISION DATES (PRELIMINARY STAGE ONLY)

SPANISH CREEK BRIDGE (REPLACE)

LOG OF TEST BORINGS 3 OF 21

SHEET 37 OF 55

FILE => 09-0077-z-ltb03.dgn

Caltrans Metric

REGISTERED CIVIL ENGINEER
7-9-09

11-2-09
PLANS APPROVAL DATE

The State of California or its officers or agents shall not be responsible for the accuracy or completeness of electronic copies of this plan sheet.

KLEINFELDER INC.
3077 FITE CIR.
SACRAMENTO, CA 95826

REGISTERED PROFESSIONAL ENGINEER
KENNETH G. SOMENSEN
No. GE 2520
Exp. 9-30-10
Geotechnical
STATE OF CALIFORNIA

DIST	COUNTY	ROUTE	KILOMETER POST TOTAL PROJECT	SHEET No	TOTAL SHEETS
02	Pla	70	56.5/57.2	124	149

USERNAME => trmikesl DATE PLOTTED => 10-NOV-2009 TIME PLOTTED => 07:29

CIVIL LOG OF TEST BORINGS SHEET (METRIC) (REV. 2/1/00)

CONSISTENCY CLASSIFICATION FOR SOILS

According to the Standard Penetration Test

SPT N-Value (Blows/ 0.3m)	Granular	SPT N-Value (Blows/ 0.3m)	Cohesive
0-4	Very Loose	<2	Very Soft
5-10	Loose	2-4	Soft
11-30	Medium Dense	5-8	Firm
31-50	Dense	9-15	Stiff
>50	Very Dense	16-30	Very stiff
		>31	Hard

NOTE: Classification of earth material as shown on this sheet is based upon field inspection and is not to be construed to imply mechanical analysis.

LEGEND OF EARTH MATERIALS

GRAVEL, SAND, SILT, CLAY, SANDY CLAY or CLAYEY SAND, SANDY SILT or SILTY SAND, SILTY CLAY, CLAYEY SILT, PEAT and/or ORGANIC MATTER, FILL MATERIAL, COBBLE, IGNEOUS ROCK, SEDIMENTARY ROCK, METAMORPHIC

LEGEND OF BORING OPERATIONS

57 mm CONE PENETRATION; SAMPLE BORING (DRY); ROTARY SAMPLE BORING (WET); AUGER BORING (DRY); TEST PIT; DIAMOND CORE BORING; JET BORING; ELECTRONIC CONE PENETRATOR

SAMPLE BORING (DRY) — ROTARY SAMPLE BORING (WET) — 57 mm CONE PENETRATION BORING — ELECTRONIC CONE PENETROMETER TEST

Cone Penetrometer dimensions and testing procedures are in accordance with ASTM standard D 3441-86, or as noted.

FOR PLAN VIEW AND ADDITIONAL NOTES, SEE "LOG OF TEST BORINGS" SHEET 1 OF 21

3.4m Lt Sta. 15+70.51
"A70" Line

B-2

Elev 962.621

102 mm

0.96 m

METASEDIMENTARY PHYLLITE: reddish brown, very intensely weathered to decomposed, soft (R0-R1), very intensely fractured, laminated, dips 70-80°, smooth surfaces, fractures randomly oriented, some clay infilling.
-foliation 60° dip.
METASEDIMENTARY META CONGLOMERATE: gray-brown, very intensely weathered, soft to moderately soft, moderately fractured, very thinly foliated, stretched and sheared pebbles and gravel to 51mm long.
SILTY SAND (SM): dense, brown, rock clasts to 51mm +, faint relic foliation structure (decomposed phyllite).
METASEDIMENTARY PHYLLITE: reddish brown, very intensely weathered to decomposed, soft (R0-R1), very intensely fractured, laminated, dips 70-80°, smooth surfaces, fractures randomly oriented, some clay infilling.
-intensely weathered, foliation near horizontal.
-5cm seam of silty sand at 70° orientation.
-foliation dips 70°.
-gray-brown.
-red-brown.
-foliation dips 65°.
METASEDIMENTARY META SANDSTONE: yellow-brown, intensely weathered, moderately soft to moderately hard (R1-R2), fine sand, laminated, 80° dip, smooth surface.
METASEDIMENTARY PHYLLITE: red-brown & gray, intensely weathered, moderately soft (R1-R2), moderately fractured, laminated, smooth to polished surfaces, dips 70-80°, breaks easily along foliation, fractures randomly oriented, minor clay infilling.
-foliation dips 50°.
-foliation dips 45°.
-shear zone 0.3m thick - clay rich, parallel to foliation.
-foliation dips 55°.
-foliation dips 50°.
-foliation dips 80°.
METASEDIMENTARY PHYLLITE: light brown and light gray, decomposed, very soft (R0), very intensely fractured, relic foliation, similair to Gravelly CLAY/Clayey GRAVEL, moderate plasticity.
-relic foliation near vertical.
-lense of marble 2cm thick, normal to foliation.
-olive-gray, decomposed to very intensely weathered, very soft to soft (R0-R1).
-2.5cm lense of marble.
-foliation dips 78°.
METASEDIMENTARY PHYLLITE: dark bluish gray, moderately to slightly weathered, soft (R0), laminated, dips 80° foliation, trace white (calcite) veins.
-82° foliation dip.
-85° foliation dip.
-increased clay content, clayey seams 1-5mm thick, parallel to foliation about 80° dip.
-bluish gray to dark bluish gray.
GWS 935.9 10/26/06
-soft, graphitic texture, rock breaks along 75° foliation, 5mm white quartz vein parallel to foliation.
SHEAR ZONE: CLAYEY SAND/CLAYEY GRAVEL: soft, dark bluish gray, low to medium plasticity, phyllite rock fragments to 4cm, relic
METASEDIMENTARY PHYLLITE: dark bluish gray, slightly weathered to fresh, moderately hard, intensely foliated but does not break along foliation easily, cataclastic - mylonic texture at 78° (shear zone).
-shear zone dipping parallel to foliation approximately 75°. Brecciated phyllite fragments in gray clay matrix. Clay is moderately plastic, soft, approximately 2cm thick.
METASEDIMENTARY META-SANDSTONE: dark gray, fresh, moderately soft to moderately hard (R1-R3), intensely fractured, laminated, dips 70° to 90°, fine grained.
METASEDIMENTARY PHYLLITE: dark bluish gray, slightly weathered to fresh, moderately hard, intensely foliated but does not break along foliation easily, cataclastic - mylonic texture at 78° (shear zone).
-Shear Zone: dipping parallel to foliation, approximately 85° dip. Brecciated gray phyllite in clay matrix. Clay is moderately plastic, soft, approximately 2cm thick.
shear zone: phyllite crushed into fine to medium grained sand particles and silt, dip not evident.
METASEDIMENTARY PHYLLITE: dark bluish gray, moderately to slightly weathered, soft, can be cut with knife easily, fingernail on foliation surfaces, 80° foliation, trace white (calcite) veins.
-graphitic texture.
-dips 75°.

7/22/2006

ELEVATION (m): 968, 965, 962, 959, 956, 953, 950, 947, 944, 941, 938, 935, 932, 929, 926, 923, 920, 917, 914, 911, 908, 905

15+40 15+60 15+80 16+00 16+20 16+40 16+60 16+80 17+00

PROFILE

HOR. 1:500
VER. 1:100

Doug Brittsan — DESIGN OVERSIGHT
9-17-09 — SIGN OFF DATE

DRAWN BY A. Sanchez
CHECKED BY P. Holland, CEG

Kleinfelder Inc. — FIELD INVESTIGATION BY:
DATE: July-Sept 2006

ORIGINAL SCALE IN MILLIMETERS FOR REDUCED PLANS 0 10 20 30 40 50 60 70 80 90 100

PREPARED FOR THE STATE OF CALIFORNIA
DEPARTMENT OF TRANSPORTATION
DIVISION OF ENGINEERING SERVICES
STRUCTURE DESIGN
DESIGN BRANCH 1

CU 02
EA 373101

FILE => 09-0077-z-ttb04.dgn

DISREGARD PRINTS BEARING EARLIER REVISION DATES

REVISION DATES (PRELIMINARY STAGE ONLY) 12-8-06 3-9-09 9-17-09 09/02/09

BRIDGE NO. 09-0077
KILOMETER POST 56.8

SPANISH CREEK BRIDGE (REPLACE)

LOG OF TEST BORINGS 4 OF 21

SHEET 38 OF 55

Caltrans Metric

REGISTERED CIVIL ENGINEER 7-9-09

11-2-09
PLANS APPROVAL DATE

The State of California or its officers or agents shall not be responsible for the accuracy or completeness of electronic copies of this plan sheet.

REGISTERED PROFESSIONAL ENGINEER KENNETH G. SOMENSER No. GE 2520 Exp. 9-30-10 GEOTECHNICAL STATE OF CALIFORNIA

KLEINFELDER INC.
3077 FITE CIR.
SACRAMENTO, CA 95826

DIST	COUNTY	ROUTE	KILOMETER POST TOTAL PROJECT	SHEET No	TOTAL SHEETS
02	Pla	70	56.5/57.2	125	149

USERNAME => trmikesl DATE PLOTTED => 10-NOV-2009 TIME PLOTTED => 07:30

CIVIL LOG OF TEST BORINGS SHEET (METRIC) (REV. 2/1/00)

CONSISTENCY CLASSIFICATION FOR SOILS

According to the Standard Penetration Test

SPT N-Value (Blows/ 0.3m)	Granular	SPT N-Value (Blows/ 0.3m)	Cohesive
0-4	Very Loose	<2	Very Soft
5-10	Loose	2-4	Soft
11-30	Medium Dense	5-8	Firm
31-50	Dense	9-15	Stiff
>50	Very Dense	16-30	Very stiff
		>31	Hard

NOTE: Classification of earth material as shown on this sheet is based upon field inspection and is not to be construed to imply mechanical analysis.

LEGEND OF EARTH MATERIALS

GRAVEL, SAND, SILT, CLAY, SANDY CLAY or CLAYEY SAND, SANDY SILT or SILTY SAND, SILTY CLAY, CLAYEY SILT, PEAT and/or ORGANIC MATTER, FILL MATERIAL, COBBLE, IGNEOUS ROCK, SEDIMENTARY ROCK, METAMORPHIC

LEGEND OF BORING OPERATIONS

57 mm CONE PENETRATION; SAMPLE BORING (DRY); ROTARY SAMPLE BORING (WET); AUGER BORING (DRY); TEST PIT; DIAMOND CORE BORING; JET BORING; ELECTRONIC CONE PENETROMETER

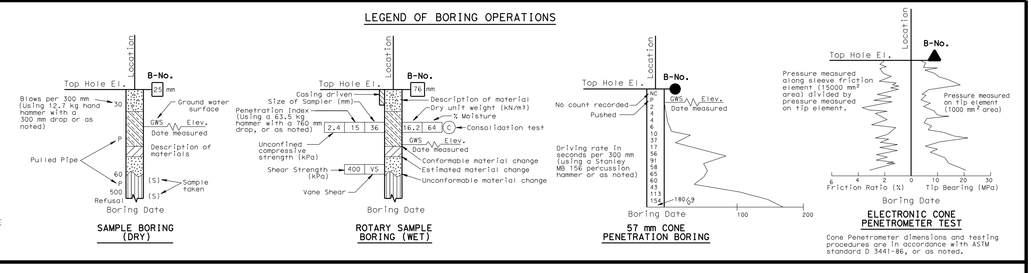

Cone Penetrometer dimensions and testing procedures are in accordance with ASTM standard D 3441-86, or as noted.

FOR PLAN VIEW AND ADDITIONAL NOTES, SEE "LOG OF TEST BORINGS" SHEET 1 OF 21

3.8m Rt Sta. 15+67.56
"A70" Line

B-2B

Drilled at 80° from horizontal in S13E direction

102 mm

Elev 962.790

96.0 mm

0 METASEDIMENTARY PHYLLITE: olive, intensely weathered, soft (R0-R1), very thinly foliated, minor clay infilling, breaks easily along foliation, smooth, 50° inclination.

3

-seams of silty sand, trace roots.
METASEDIMENTARY META SANDSTONE: olive, intensely to moderately weathered, moderately hard (R2), intensely foliated, smooth, foliation 50° inclination, fine grained sand, rock breaks easily along foliation.

6 METASEDIMENTARY PHYLLITE: olive-gray, intensely weathered, soft to very soft (R0-R1), trace seams of clay about 1-5mm thick along foliation planes, laminated, 52° inclination, smooth surface, moderately fractured, randomly oriented, no infill.
-lenses of meta sandstone 3 cm thick.
-high clay content, sample sticking to core barrel.
-foliation about 70°.
-no clay.

9
-lens of meta sandstone 15cm thick.
-foliation 54° inclination.
-lense of dark gray , coarse grained calcium carbonate, parallel to foliation, 3cm thick.
-lens of meta sandstone 10cm thick.
-lens of meta sandstone 10cm thick.
-5-10% fines content.

12
-foliation 42° inclination.
-soft, greenish gray, medium plasticity, lens of sandy clay (decomposed meta-sandstone) about 15cm thick.
-lens of meta sandstone, graphitic texture, no fines.
-foliation 48° inclination.
-gray.

15
-foliation 40° inclination, surfaces have red-brown film.
-foliation 42° inclination.
-foliation 52° inclination.
-3cm thick lens of sandy clay (decomposed sandstone), 20° fracture.
-8cm thick lens of meta sandstone.
-foliation 45° inclination.
-foliation 46° inclination.
-3cm thick lens of meta-sandstone.

18
-foliations surfaces have red-brown weathering film.
-fracture 10° inclination.
METASEDIMENTARY META SANDSTONE: olive-gray, slightly weathered, moderately hard (R2), moderately fractured, intensely foliated, trace quartz veins cutting foliation, trace elipsoid/stretched pebbles, randomly oriented.
-75° foliation inclination.

21 METASEDIMENTARY PHYLLITE: bluish gray, slightly weathered, soft (R0-R1), laminated, 85° inclination, polished surfaces.
-78° inclination at contact.
METASEDIMENTARY META-SANDSTONE: olive-gray, moderately weathered, moderately hard (R2), moderately fractured, randomly oriented, no infill, fine sand, moderately foliated.
-thin interbedded lenses of phyllite.
-fracture inclinations 20°-25°, smooth surface, with minor quartz infill, slightly weathered.

24
-fracture inclinations 50°, rough surface, thin brown weathered surface.
-slightly weathered, 77° foliation inclination.
GWS 22.4
7/25/06
-fracture inclinations 10°, discontinuous through core, yellow-brown weathered surface, moderately rough.

27
-folded quartz veins.
-72° inclination contact.
METASEDIMENTARY PHYLLITE: dark bluish gray, slightly weathered, soft (R0-R1), laminated, 70-90° inclination foliation, graphitic texture.
-clay seam 10cm thick.
METASEDIMENTARY META-SANDSTONE: bluish gray, slightly weathered, moderately hard (R2), fine sand, very thinly foliated, 80-85° inclination, moderately fractured, generally 10°-15° inclination, rough surface, lenses of stretched pebbles and gravels to 46cm thick.

30
-seams 1cm thick of graphitic phyllite.
-contact 80° inclination.
METASEDIMENTARY PHYLLITE: dark bluish gray, fresh, soft to moderately hard (R0-R2), moderately fractured, inclinations 10°-15°, laminated, 80° inclination, smooth to polished surfaces, graphitic texture.

33
-trace pyrite.
-foliation 90° inclination.
-foliation 85° inclination.
-lenses of meta-sandstone to several cm thick.

36
-lenses to 5.5cm thick of stretched and sheared pebbles and gravels.
-fracture inclinations 20°, slightly rough, fresh surface, monor quartz mineralization.
-fracture inclinations 20°, slightly rough surface, fresh, minor quartz mineralization.
-fracture inclinations 70°, slightly rough surface, fresh, minor quartz mineralization.

39
-fracture inclinations 20°, slightly rough surface, fresh, minor quartz mineralization.
-clay seam about 5cm thick, parallel to foliation, 85° inclination.
-more sandstone, less phyllite.
-trace quartz veins.
-contact 70° inclination.
METASEDIMENTARY META SANDSTONE: gray, fresh, moderately hard (R2), moderately fractured, thinly foliated, smooth to polished surfaces, fine grained, thin seams of interbedded phyllite.

42
-foliation 65° inclination.
-grades to phyllite.
METASEDIMENTARY PHYLLITE: dark bluish gray, fresh, soft to moderately hard (R0-R2), moderately fractured, inclinations 10°-15°, laminated, 80° inclination, smooth to polished surfaces, graphitic texture.
METASEDIMENTARY META SANDSTONE: bluish gray, fresh, moderately hard (R2), laminated, inclinations 70°-80°, fine grained.

45
-foliation 70° inclination.
-fracture 60° inclination.
-foliation 68° inclination.
-lense of phyllite about 15cm thick.
-foliation 71° inclination.
-20° fracture.
7/25/2006

48

REC=50% RQD=0%; REC=90% RQD=0%; REC=90% RQD=0%; REC=80% RQD=0%; REC=70% RQD=0%; REC=70% RQD=0%; REC=70% RQD=0%; REC=60% RQD=0%; REC=68% RQD=0%; REC=75% RQD=0%; REC=33% RQD=0%; REC=75% RQD=0%; REC=75% RQD=0%; REC=80% RQD=0%; REC=80% RQD=0%; REC=75% RQD=0%; REC=80% RQD=0%; REC=60 RQD=0%; REC=65% RQD=0%; REC=60% RQD=37%; REC=95% RQD=83%; REC=80% RQD=0%; REC=100% RQD=72%; REC=100% RQD=50%; REC=100% RQD=50%; REC=90% RQD=0%; REC=80% RQD=0%; REC=100% RQD=0%; REC=100% RQD=20%; REC=95% RQD=0%; REC=100% RQD=0%; REC=100% RQD=0%; REC=100% RQD=0%; REC=100% RQD=0%; REC=100% RQD=0%; REC=100% RQD=0%; REC=98% RQD=0%; REC=100% RQD=0%; REC=100% RQD=0%; REC=0% RQD=0%; REC=98% RQD=0%; REC=90% RQD=0%; REC=97% RQD=0%; REC=90% RQD=0%; REC=100% RQD=0%; REC=100% RQD=0%; REC=100% RQD=0%; REC=100% RQD=0%; REC=100% RQD=0%; REC=100% RQD=0%; REC=98% RQD=25%; REC=40% RQD=0%; REC=40% RQD=0%; REC=30% RQD=0%

DEPTH (m)

15+40 15+60 15+80 16+00 16+20 16+40 16+60 16+80 17+00

PROFILE

HOR. 1:500
VER. 1:80

DOUG BRITTSAN, DESIGN OVERSIGHT, 9-17-09, SIGN OFF DATE

DRAWN BY A. Sanchez
CHECKED BY P. Holland, CEG

Kleinfelder Inc.
FIELD INVESTIGATION BY:
DATE: July-Sept 2006

ORIGINAL SCALE IN MILLIMETERS FOR REDUCED PLANS

PREPARED FOR THE STATE OF CALIFORNIA DEPARTMENT OF TRANSPORTATION

DIVISION OF ENGINEERING SERVICES STRUCTURE DESIGN

DESIGN BRANCH 1

CU 02
EA 373101

FILE => 09-0077-z-ttb05.dgn

DISREGARD PRINTS BEARING EARLIER REVISION DATES

BRIDGE NO. 09-0077
KILOMETER POST 56.8

SPANISH CREEK BRIDGE (REPLACE)

LOG OF TEST BORINGS 5 OF 21

REVISION DATES (PRELIMINARY STAGE ONLY) 12-8-06 3-9-09 9-17-09 09/22/09

SHEET 39 OF 55

Caltrans Metric

REGISTERED CIVIL ENGINEER 7-9-09

11-2-09
PLANS APPROVAL DATE

The State of California or its officers or agents shall not be responsible for the accuracy or completeness of electronic copies of this plan sheet.

REGISTERED PROFESSIONAL ENGINEER KENNETH G. SOMENSEN No. GE 2520 Exp. 9-30-10 GEOTECHNICAL STATE OF CALIFORNIA

KLEINFELDER INC.
3077 FITE CIR.
SACRAMENTO, CA 95826

DIST	COUNTY	ROUTE	KILOMETER POST TOTAL PROJECT	SHEET No	TOTAL SHEETS
02	Pla	70	56.5/57.2	126	149

USERNAME => trmikesl DATE PLOTTED => 10-NOV-2009 TIME PLOTTED => 07:30

CIVIL LOG OF TEST BORINGS SHEET (METRIC) (REV. 2/1/00)

CONSISTENCY CLASSIFICATION FOR SOILS

According to the Standard Penetration Test

SPT N-Value (Blows/ 0.3m)	Granular	SPT N-Value (Blows/ 0.3m)	Cohesive
0-4	Very Loose	<2	Very Soft
5-10	Loose	2-4	Soft
11-30	Medium Dense	5-8	Firm
31-50	Dense	9-15	Stiff
>50	Very Dense	16-30	Very stiff
		>31	Hard

NOTE: Classification of earth material as shown on this sheet is based upon field inspection and is not to be construed to imply mechanical analysis.

LEGEND OF EARTH MATERIALS

GRAVEL, SAND, SILT, CLAY, SANDY CLAY or CLAYEY SAND, SANDY SILT or SILTY SAND, SILTY CLAY, CLAYEY SILT, PEAT and/or ORGANIC MATTER, FILL MATERIAL, COBBLE, IGNEOUS ROCK, SEDIMENTARY ROCK, METAMORPHIC

LEGEND OF BORING OPERATIONS

57 mm CONE PENETRATION; SAMPLE BORING (DRY); ROTARY SAMPLE BORING (WET); AUGER BORING (DRY); TEST PIT; DIAMOND CORE BORING; JET BORING; ELECTRONIC CONE PENETROMETER

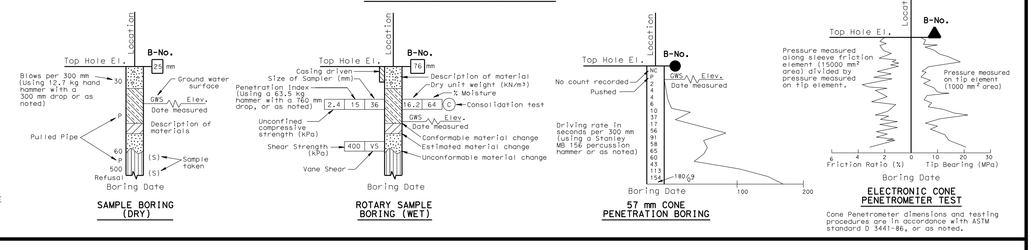

FOR PLAN VIEW AND ADDITIONAL NOTES, SEE "LOG OF TEST BORINGS" SHEET 1 OF 21

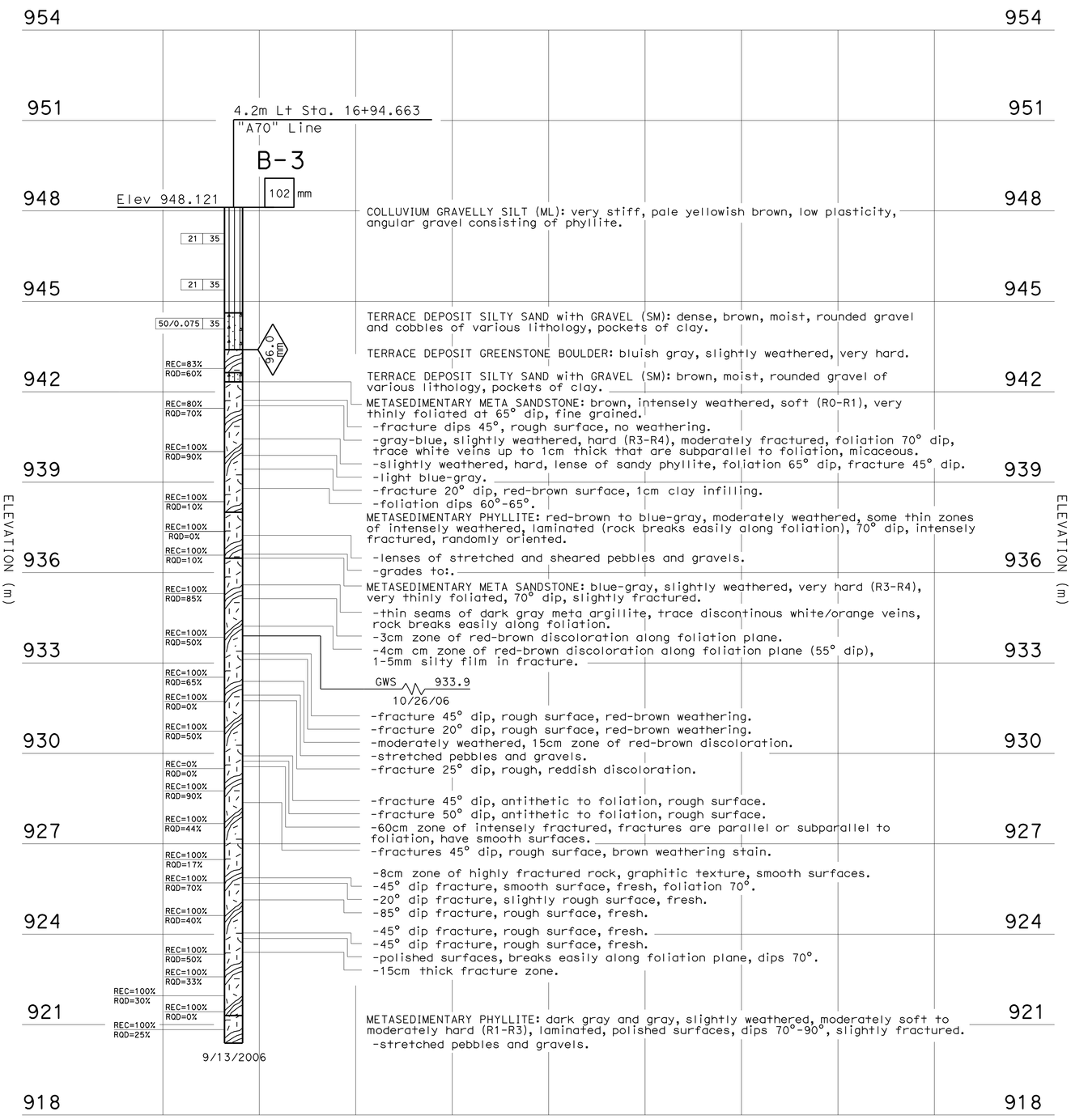

PROFILE
HOR. 1:500
VER. 1:80

Doug Brittsan
DESIGN OVERSIGHT
9-17-09
SIGN OFF DATE

DRAWN BY A. Sanchez
CHECKED BY P. Holland, CEG

Kleinfelder Inc.
FIELD INVESTIGATION BY:
DATE: July-Sept 2006

ORIGINAL SCALE IN MILLIMETERS FOR REDUCED PLANS

PREPARED FOR THE STATE OF CALIFORNIA
DEPARTMENT OF TRANSPORTATION
DIVISION OF ENGINEERING SERVICES
STRUCTURE DESIGN
DESIGN BRANCH 1

CU 02
EA 373101

FILE => 09-0077-z-ttb06.dgn

DISCARD PRINTS BEARING EARLIER REVISION DATES

REVISION DATES (PRELIMINARY STAGE ONLY)
12-8-06
3-9-09
9-17-09
09/22/09

BRIDGE NO. 09-0077
KILOMETER POST 56.8

SPANISH CREEK BRIDGE (REPLACE)

LOG OF TEST BORINGS 6 OF 21

SHEET 40 OF 55

Caltrans
Metric

REGISTERED CIVIL ENGINEER
7-9-09
11-2-09
PLANS APPROVAL DATE

REGISTERED PROFESSIONAL ENGINEER
KENNETH G. SOMENSEN
No. GE 2520
Exp. 9-30-10
GEOTECHNICAL
STATE OF CALIFORNIA

The State of California or its officers or agents shall not be responsible for the accuracy or completeness of electronic copies of this plan sheet.

KLEINFELDER INC.
3077 FITE CIR.
SACRAMENTO, CA 95826

DIST	COUNTY	ROUTE	KILOMETER POST TOTAL PROJECT	SHEET No	TOTAL SHEETS
02	Pla	70	56.5/57.2	127	149

USERNAME => trmikesl DATE PLOTTED => 10-NOV-2009 TIME PLOTTED => 07:31

CIVIL LOG OF TEST BORINGS SHEET (METRIC) (REV. 2/1/00)

CONSISTENCY CLASSIFICATION FOR SOILS

According to the Standard Penetration Test

SPT N-Value (Blows/ 0.3m)	Granular	SPT N-Value (Blows/ 0.3m)	Cohesive
0-4	Very Loose	<2	Very Soft
5-10	Loose	2-4	Soft
11-30	Medium Dense	5-8	Firm
31-50	Dense	9-15	Stiff
>50	Very Dense	16-30	Very stiff
		>31	Hard

NOTE: Classification of earth material as shown on this sheet is based upon field inspection and is not to be construed to imply mechanical analysis.

LEGEND OF EARTH MATERIALS

GRAVEL, SAND, SILT, CLAY, SANDY CLAY or CLAYEY SAND, SANDY SILT or SILTY SAND, SILTY CLAY, CLAYEY SILT, PEAT and/or ORGANIC MATTER, FILL MATERIAL, COBBLE, IGNEOUS ROCK, SEDIMENTARY ROCK, METAMORPHIC

LEGEND OF BORING OPERATIONS

57 mm CONE PENETRATION; SAMPLE BORING (DRY); ROTARY SAMPLE BORING (WET); AUGER BORING (DRY); TEST PIT; DIAMOND CORE BORING; JET BORING; ELECTRONIC CONE PENETROMETER

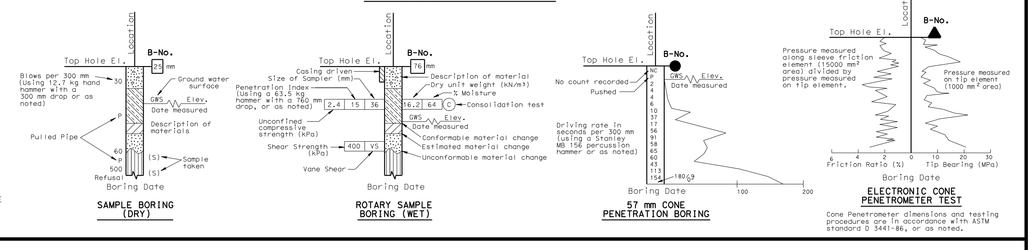

Cone Penetrometer dimensions and testing procedures are in accordance with ASTM standard D 3441-86, or as noted.

FOR PLAN VIEW AND ADDITIONAL NOTES, SEE "LOG OF TEST BORINGS" SHEET 1 OF 21

3.6m Rt Sta. 16+96.929
"A70" Line

B-3B

Drilled at 51° from horizontal in S20E direction

102 mm

Elev 950.809

0.96 m

TERRACE DEPOSIT SILTY SAND with GRAVEL, COBBLES, AND BOULDERS: dense, olive-brown, moist, fine sand, 50% silty sand matrix, 50% subrounded gravels to boulders composed of greenstone, shist, and quartz.

REC=70% RQD=0%
REC=50% RQD=0%
REC=50% RQD=0%
REC=50% RQD=0%
REC=90% RQD=0%
REC=100% RQD=60%
REC=100% RQD=70%
REC=100% RQD=0%
REC=100% RQD=20%
REC=100% RQD=10%
REC=100% RQD=95%
REC=100% RQD=95%
REC=100% RQD=100%
REC=100% RQD=40%
REC=100% RQD=40%
REC=100% RQD=40%
REC=100% RQD=60%
REC=100% RQD=90%
REC=100% RQD=95%
REC=100% RQD=80%
REC=100% RQD=80%
REC=100% RQD=80%
REC=100% RQD=75%
REC=100% RQD=80%

METASEDIMENTARY META SANDSTONE: red-brown, intensely weathered, moderately soft (R1), intensely fractured, very thinly foliated 80° inclination, fine grained, abundant mica.
-fracture inclinations approx. 45°, slightly rough surfaces, red-brown weathering stain.
-fracture inclinations approx. 45°, slightly rough surfaces, red-brown weathering stain.
-fracture inclinations approx. 45°, slightly rough surfaces, red-brown weathering stain.
-fracture inclinations approx. 45°, slightly rough surfaces, red-brown weathering stain.
-fracture inclinations approx. 45°, slightly rough surfaces, red-brown weathering stain.
-blue-gray, fresh, extremely hard (R5-R6), trace quartz veins throughout.
-fracture inclinations approximately 45°, moderately rough surface, no weathering.
-foliation 80°.
-foliation 75°.
-fracture approximately 30° inclination, rough surface, no weathering.
-foliation near level.
-fracture approx. 45° inclination, rough surface, weathered red-brown, minor clay infilling.
-trace white veins offset by foliation, foliation 75-80°.
-fracture 20° inclination, rough surface, no weathering.
PHYLLITE: dark gray, intensely weathered, moderately soft (R1), intensely fractured, laminated, inclinations approximately 90°, polished surfaces with red-brown weathering and some shearing, pyrite cubes between 13.6 and 13.7M.
-stretched and sheared gravel and cobble.
-fracture inclinations approx. 35°, slightly rough surface, yellow-brown weather staining.
META SANDSTONE: and dark gray, moderately weathered, moderately hard to moderately soft (R1-R2), intensely to moderately fractured, laminated, 75° inclination, abundant randomly oriented white quartz veins to 3mm thick.
-20° fracture, 45° fracture, no infill, slightly weathered.
-dark gray to black, intensely fractured for 45cm, smooth surfaces, randomly oriented.
-approximately 50° fracture inclination, smooth surface, slightly polished (mica planes), minor weathering.
-fracture, approximately 65° inclination, smoothe surface, silt infilling.
-fracture, approx. 45° inclination, smooth to slightly rough surface, no weathering.
-80° foliation, fracture, 45° inclination, slightly rough surface, no weathering.
-fracture, approximately 45° inclination, smooth surface,
-clay film on surface.
-abdundant discontinuous white veins <= 1cm diameter.
METASEDIMENTARY META SANDSTONE: dark gray, slightly weathered to fresh, moderately hard to hard (R2-R3), intensely to moderately fractured, very thinly foliated, smooth to polished surfaces, inclinations generally 75° to 90°, fine grained.
-approximate inclination 55° fracture, slightly rough surface, no weathering.
-fracture, approx. 70° inclination, smooth surface, slight yellow-brown weathering surface.
-fracture approximately 45° inclination, smooth, polished surface, no weathering.
-fracture approximately 20° inclination, rough surface, red-brown weathering stain.
-abdundant white calcite and quartz veins.
-fracture approximately 45° inclination, slightly rough surface, white calcite crystals to 4mm, radiating patterns.
-white bands parallel to foliation (80°).
-fracture, approximately 45° inclination, slightly rough surfaces, white calcite crystals to 4mm, radiating pattern.
-fracture, approximately 70° inclination, smooth to rough surface.
-very intensely fractured, 30 cm zone.
-2 subparallel fractures inclinationping 75° to 85°, smooth surface, yellow-brown weathering stain.
-30 cm zone of highly fractured, discolored red-brown, fractures generally 25° to 45°, clay infilling.
-fracture approximately 70° inclination, smooth surface, no weathering.
-80° foliation.
-abundant white veins parallel to foliation, to 3mm thick.
-fracture, approximately 50° inclination, smooth surface, no weathering.
-fracture, 45° inclination, smooth to slightly polished, no weathering.
-fracture, approximately 65° inclination, smooth to slightly polished, no weathering.
-fracture, approximately 65° inclination, smooth to slightly polished, no weathering.
-fracture, approximately 45° inclination, smooth to slightly polished, no weathering.
-fracture, approximately 45° inclination, smooth to slightly polished, no weathering.
-fracture, approximately 35° inclination, smooth to slightly polished, no weathering.
-pyrite mineralization.
-fracture, approximately 80° inclination, smooth surface, no weathering.
-fracture, approximately 45° inclination, rough surface, no weathering.
-fracture, approximately 45° inclination, slightly rough surface, no weathering.
-fracture, approximately 45° inclination, slightly rough surface, no weathering.
-foliation 80-90°.
-fracture, approximately 45° inclination, slightly rough surface, no weathering.

9/13/2006

DEPTH (m): 0, 3, 6, 9, 12, 15, 18, 21, 24, 27, 30, 33, 36, 39, 42, 45

16+80 17+00 17+20 17+40 17+60 17+80 18+00 18+20

PROFILE

HOR. 1:500
VER. 1:80

Caltrans Metric

REGISTERED CIVIL ENGINEER 7-9-09
PLANS APPROVAL DATE 11-2-09

The State of California or its officers or agents shall not be responsible for the accuracy or completeness of electronic copies of this plan sheet.

REGISTERED PROFESSIONAL ENGINEER KENNETH G. SOMENSEN No. GE 2520 Exp. 9-30-10 GEOTECHNICAL STATE OF CALIFORNIA

KLEINFELDER INC.
3077 FITE CIR.
SACRAMENTO, CA 95826

DIST	COUNTY	ROUTE	KILOMETER POST TOTAL PROJECT	SHEET No	TOTAL SHEETS
02	PLA	70	56.5/57.2	128	149

DOUG BRITTSAN
DESIGN OVERSIGHT
9-17-09
SIGN OFF DATE

DRAWN BY A. Sanchez
CHECKED BY P. Holland, CEG

Kleinfelder Inc.
FIELD INVESTIGATION BY:
DATE: July-Sept 2006

ORIGINAL SCALE IN MILLIMETERS FOR REDUCED PLANS 0 10 20 30 40 50 60 70 80 90 100

PREPARED FOR THE STATE OF CALIFORNIA
DEPARTMENT OF TRANSPORTATION

DIVISION OF ENGINEERING SERVICES
STRUCTURE DESIGN
DESIGN BRANCH 1

CU 02
EA 373101

BRIDGE NO. 09-0077
KILOMETER POST 56.8

DISREGARD PRINTS BEARING EARLIER REVISION DATES

REVISION DATES (PRELIMINARY STAGE ONLY) 12-8-06 3-9-09 9-17-09 09/02/09

SPANISH CREEK BRIDGE (REPLACE)

LOG OF TEST BORINGS 7 OF 21

SHEET 41 OF 55

FILE => 09-0077-z-ttb07.dgn

USERNAME => trmikesl DATE PLOTTED => 10-NOV-2009 TIME PLOTTED => 07:31

CIVIL LOG OF TEST BORINGS SHEET (METRIC) (REV. 2/1/00)

CONSISTENCY CLASSIFICATION FOR SOILS

According to the Standard Penetration Test

SPT N-Value (Blows/ 0.3m)	Granular	SPT N-Value (Blows/ 0.3m)	Cohesive
0-4	Very Loose	<2	Very Soft
5-10	Loose	2-4	Soft
11-30	Medium Dense	5-8	Firm
31-50	Dense	9-15	Stiff
>50	Very Dense	16-30	Very stiff
		>31	Hard

NOTE: Classification of earth material as shown on this sheet is based upon field inspection and is not to be construed to imply mechanical analysis.

LEGEND OF EARTH MATERIALS

GRAVEL, SAND, SILT, CLAY, SANDY CLAY or CLAYEY SAND, SANDY SILT or SILTY SAND, SILTY CLAY, CLAYEY SILT, PEAT and/or ORGANIC MATTER, FILL MATERIAL, COBBLE, IGNEOUS ROCK, SEDIMENTARY ROCK, METAMORPHIC

LEGEND OF BORING OPERATIONS

57 mm CONE PENETRATION; SAMPLE BORING (DRY); ROTARY SAMPLE BORING (WET); AUGER BORING (DRY); TEST PIT; DIAMOND CORE BORING; JET BORING; ELECTRONIC CONE PENETROMETER

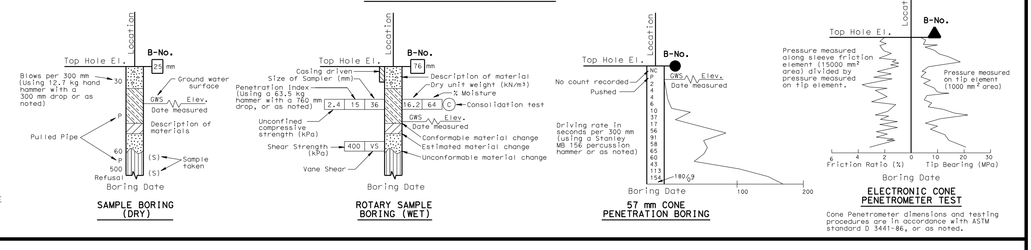

FOR PLAN VIEW AND ADDITIONAL NOTES, SEE "LOG OF TEST BORINGS" SHEET 1 OF 21

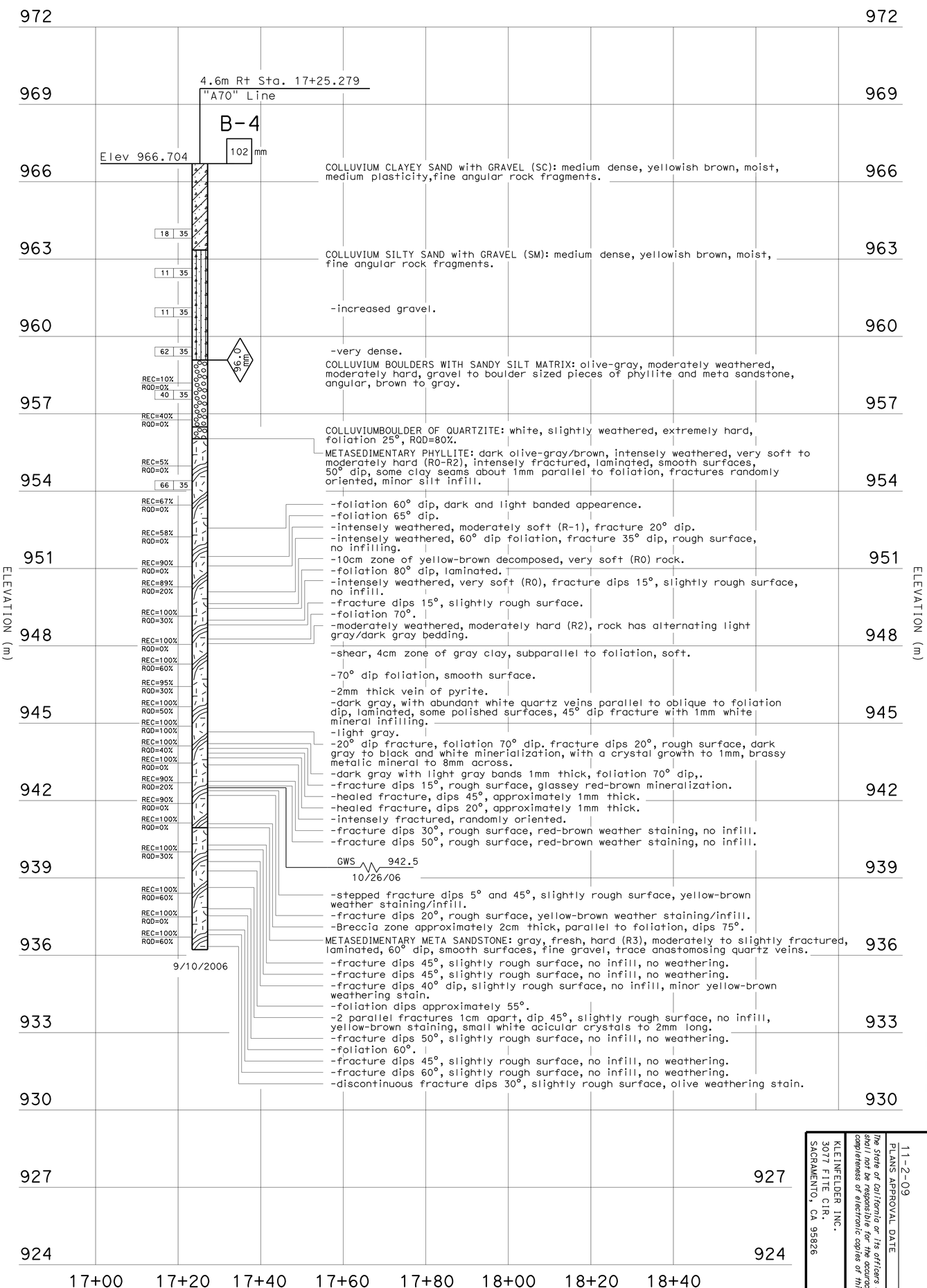

PROFILE

HOR. 1:500
VER. 1:80

DESIGN OVERSIGHT	Doug Brittsan
SIGN OFF DATE	9-17-09
DRAWN BY	A. Sanchez
CHECKED BY	P. Holland, CEG
FIELD INVESTIGATION BY:	Kleinfelder Inc.
DATE:	July-Sept 2006

ORIGINAL SCALE IN MILLIMETERS FOR REDUCED PLANS

PREPARED FOR THE STATE OF CALIFORNIA DEPARTMENT OF TRANSPORTATION

DIVISION OF ENGINEERING SERVICES STRUCTURE DESIGN DESIGN BRANCH 1

CU 02 EA 373101

FILE => 09-0077-z-ttb08.dgn

DISREGARD PRINTS BEARING EARLIER REVISION DATES

REVISION DATES (PRELIMINARY STAGE ONLY) 12-8-06 3-9-09 9-17-09 09-22-09

BRIDGE NO. 09-0077

KILOMETER POST 56.8

SPANISH CREEK BRIDGE (REPLACE)

LOG OF TEST BORINGS 8 OF 21

SHEET 42 OF 55

KLEINFELDER INC.
3077 FITE CIR.
SACRAMENTO, CA 95826

REGISTERED CIVIL ENGINEER 7-9-09

11-2-09
PLANS APPROVAL DATE

The State of California or its officers or agents shall not be responsible for the accuracy or completeness of electronic copies of this plan sheet.

REGISTERED PROFESSIONAL ENGINEER KENNETH G. SOMENSEN No. GE 2520 Exp. 9-30-10 GEOTECHNICAL STATE OF CALIFORNIA

Caltrans Metric

DIST	COUNTY	ROUTE	KILOMETER POST TOTAL PROJECT	SHEET No	TOTAL SHEETS
02	Pla	70	56.5/57.2	129	149

USERNAME => trmikesl DATE PLOTTED => 10-NOV-2009 TIME PLOTTED => 07:31

DIST	COUNTY	ROUTE	KILOMETER POST TOTAL PROJECT	SHEET No	TOTAL SHEETS
02	Pla	70	56.5/57.2	130	149

REGISTERED CIVIL ENGINEER 7-9-09

11-2-09
PLANS APPROVAL DATE

REGISTERED PROFESSIONAL ENGINEER KENNETH G. SORENSEN No. GE 2520 Exp. 9-30-10 GEOTECHNICAL STATE OF CALIFORNIA

The State of California or its officers or agents shall not be responsible for the accuracy or completeness of electronic copies of this plan sheet.

KLEINFELDER INC.
3077 FITE CIR.
SACRAMENTO, CA 95826

Caltrans Metric

LEGEND OF BORING OPERATIONS

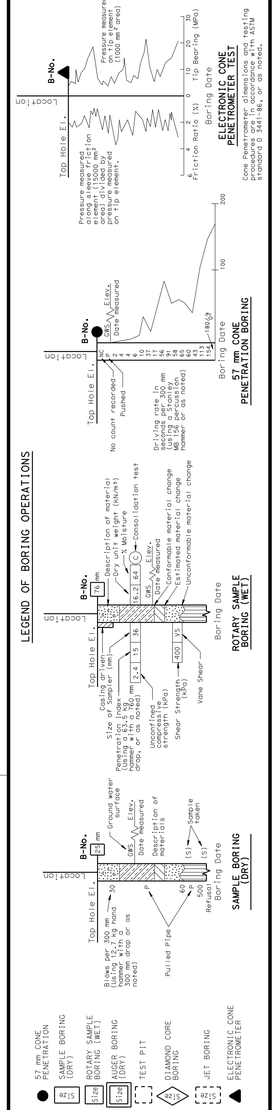

LEGEND OF EARTH MATERIALS

GRAVEL, SAND, SILT, CLAY, SANDY CLAY or CLAYEY SAND, SANDY SILT or SILTY SAND, SILTY CLAY, CLAYEY SILT, PEAT and/or ORGANIC MATTER, FILL MATERIAL, COBBLE, IGNEOUS ROCK, SEDIMENTARY ROCK, METAMORPHIC

CONSISTENCY CLASSIFICATION FOR SOILS

According to the Standard Penetration test

SPT N-Value (Blows/ 0.3m)	Granular	SPT N-Value (Blows/ 0.3m)	Cohesive
0-4	Very Loose	<2	Very Soft
5-10	Loose	2-4	Soft
11-30	Medium Dense	5-8	Firm
31-50	Dense	9-15	Stiff
>50	Very Dense	16-30	Very stiff
		>31	Hard

NOTE: Classification of earth material as shown on this sheet is based upon field inspection and is not to be construed to imply mechanical analysis.

FOR PLAN VIEW AND ADDITIONAL NOTES, SEE "LOG OF TEST BORINGS" SHEET 1 OF 21

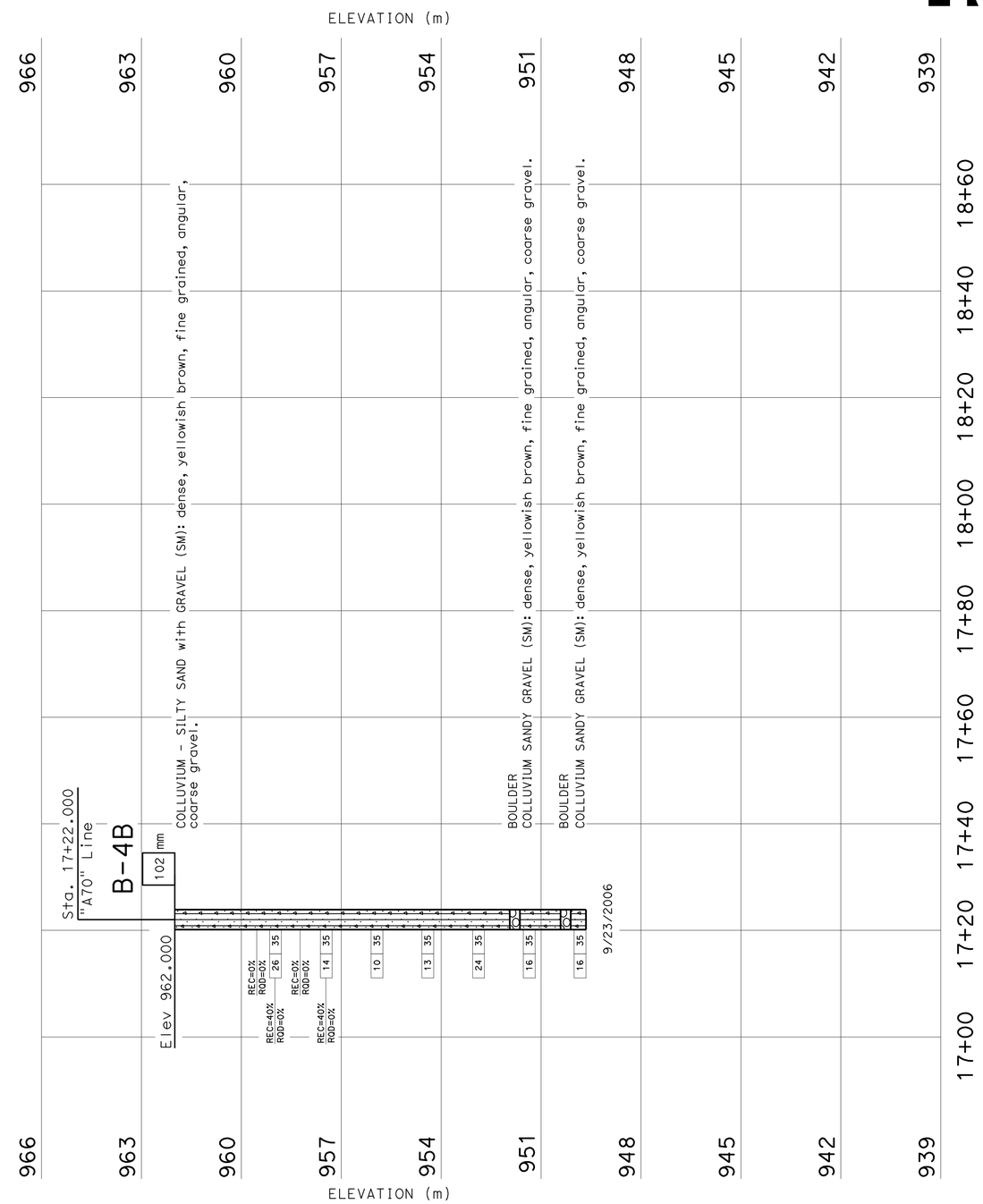

PROFILE

HOR. 1:500
VER. 1:80

Doug Brittsan, DESIGN OVERSIGHT	DRAWN BY	A. Sanchez	Kleinfelder Inc. FIELD INVESTIGATION BY:
9-17-09, SIGN OFF DATE	CHECKED BY	P. Holland, CEG	DATE: July-Sept 2006

PREPARED FOR THE STATE OF CALIFORNIA DEPARTMENT OF TRANSPORTATION

DIVISION OF ENGINEERING SERVICES STRUCTURE DESIGN
DESIGN BRANCH 1

BRIDGE NO. 09-0077
KILOMETER POST 56.8

SPANISH CREEK BRIDGE (REPLACE)

LOG OF TEST BORINGS 9 OF 21

CIVIL LOG OF TEST BORINGS SHEET (METRIC) (REV. 2/1/00)

ORIGINAL SCALE IN MILLIMETERS FOR REDUCED PLANS 0 10 20 30 40 50 60 70 80 90 100

CU 02
EA 373101

DISREGARD PRINTS BEARING EARLIER REVISION DATES

REVISION DATES (PRELIMINARY STAGE ONLY): 12-8-06, 7-9-09, 9-17-09, 09-22-09

SHEET 43 OF 55

FILE => 09-0077-z-ltb09.dgn

USERNAME => trmikest DATE PLOTTED => 10-NOV-2009 TIME PLOTTED => 07:32

CIVIL LOG OF TEST BORINGS SHEET (METRIC) (REV. 2/1/00)

CONSISTENCY CLASSIFICATION FOR SOILS

According to the Standard Penetration Test

SPT N-Value (Blows/ 0.3m)	Granular	SPT N-Value (Blows/ 0.3m)	Cohesive
0-4	Very Loose	<2	Very Soft
5-10	Loose	2-4	Soft
11-30	Medium Dense	5-8	Firm
31-50	Dense	9-15	Stiff
>50	Very Dense	16-30	Very stiff
		>31	Hard

NOTE: Classification of earth material as shown on this sheet is based upon field inspection and is not to be construed to imply mechanical analysis.

LEGEND OF EARTH MATERIALS

GRAVEL, SAND, SILT, CLAY, SANDY CLAY or CLAYEY SAND, SANDY SILT or SILTY SAND, SILTY CLAY, CLAYEY SILT, PEAT and/or ORGANIC MATTER, FILL MATERIAL, COBBLE, IGNEOUS ROCK, SEDIMENTARY ROCK, METAMORPHIC

LEGEND OF BORING OPERATIONS

57 mm CONE PENETRATION; SAMPLE BORING (DRY); ROTARY SAMPLE BORING (WET); AUGER BORING (DRY); TEST PIT; DIAMOND CORE BORING; JET BORING; ELECTRONIC CONE PENETRATOR

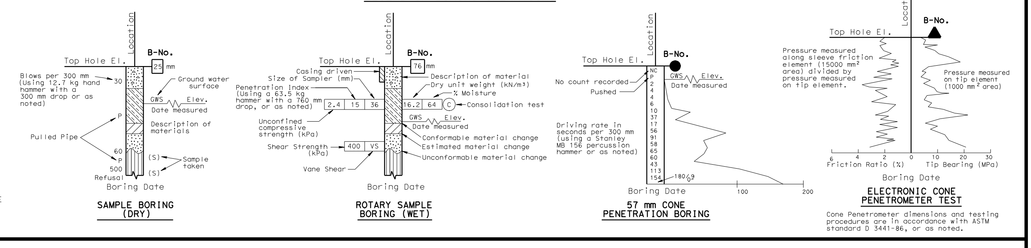

Cone Penetrometer dimensions and testing procedures are in accordance with ASTM standard D 3441-86, or as noted.

FOR PLAN VIEW AND ADDITIONAL NOTES, SEE "LOG OF TEST BORINGS" SHEET 1 OF 21

3.0m Lt Sta. 17+48.675
"A70" Line

B-5

Elev 977.563

102 mm

0.96 mm

FILL GRAVELLY SILT (ML): olive-brown, moist, angular, fine to coarse gravel, low plasticity, fine to coarse sand, composed of weathered phyllite.

COLLUVIUM GRAVELLY SILT (ML): olive-brown, moist, angular, fine to coarse gravel, low plasticity, fine to coarse sand, composed of weathered .phyllite

DECOMPOSED PHYLLITE BEDROCK SILTY SAND with GRAVEL (SM): medium dense, olive-brown, moist, angular, fine to coarse gravel, well graded, poorly cemented.

METASEDIMENTARY PHYLLITE: yellowish brown, intensely to moderately weathered, moderately hard (R2), laminated at 40° dip, some clay infilling along foliation, trace white veins.
-fracture 35° dip, minor clay infill.
-foliation 60° dip.
-lenses of meta sandstone approximately 5cm thick.

METASEDIMENTARY META SANDSTONE: brown, moderately weathered, moderately hard (R2), laminated, 57° dip, rock breaks easily along foliation, surface smooth, slightly fractured.
-bluish gray, slightly weathered, hard (R3), laminated, some clay infilling, smooth surfaces, slightly fractured.
-fracture zone: 2cm thick perpendicular to foliation, 45° dip, silt/clay infill.
-fracture zone: 2cm thick perpendicular to foliation, 45° dip, silt/clay infill.
-foliation 45° dip, intensely fractured, randomly oriented, smooth surfaces.

METASEDIMENTARY META CONGLOMERATE: light brown to gray and light gray, moderately weathered, moderately hard (R2), laminated at 50° dip, sandy matrix, gravels are stretched and sheared, slightly fractured.
-foliation at 60°, rock breaks easily along foliation.
-very hard rock (R4-R5).
-15° fracture dip, smooth surface.
-8cm thick fracture zone, randomly oriented, polished surfaces.

METASEDIMENTARY META SANDSTONE: bluish gray, slightly weathered, very hard (R4-R5), generally parallel to foliation, 2mm thick, laminated at 60° dip, trace white veins, fine grained, slightly fractured.
-fracture 20° dip, slightly rough surface, no infilling.

METASEDIMENTARY QUARTZITE: light gray, moderately weathered, moderately hard (R2), intensely fractured, laminated, polished surfaces (mica), foliation 60° dip.
-10° fracture dip, smooth surface, no infill.
-10° fracture dip, smooth surface, no infill.

METASEDIMENTARY PHYLLITE: light bluish gray to dark gray (banded), slightly weathered, moderately hard (R2), laminated, smooth surfaces, 60° dip, rock breaks easily along foliation.
-dark gray, fresh, hard (R3), foliation 60° dip, some weathering on foliation surface, minor clay infill.
-3cm zone of very weak rock.
-hard (R3), white vein 1cm thick parallel to foliation, with pyrite cubes, 20° fracture, dark red-brown discoloration.
-6cm fracture zone, fractures dip 10°-20°, smooth surfaces, no infill.
-fracture dips 10°, smooth surface, some weathering stain on surface.
-healed fracture 45°-50° dip, approximately 2mm thick.

METASEDIMENTARY META CONGLOMERATE: gray and light gray, slightly weathered, hard (R3), laminated with 60°-70° dip, slightly fractured, stretched and sheared gravels.
-fracture, 5° dip, smooth surface, fresh surface.
-fracture, 20° dip, slightly rough surface, minor weathering.
-fracture, 20° dip, slightly rough surface, minor weathering.
-foliation 60° dip.
-white mineralization infill along foliation plane, approximately 2mm thick.

METASEDIMENTARY PHYLLITE: dark gray, slightly weathered, hard (R3), thinly foliated, dips approximately 60°, slightly fractured.
-fracture dip horizontal, smooth surface, orange weathering stain.
-fracture dip horizontal, smooth surface, orange weathering stain.
-fracture dip horizontal, smooth surface, orange weathering stain.

METASEDIMENTARY META CONGLOMERATE: gray and light gray, slightly weathered, hard (R3), laminated with 60°-70° dip, slightly fractured, stretched and sheared gravels.

METASEDIMENTARY PHYLLITE: banded light and dark gray, intensely to moderately weathered, moderately soft to moderately hard (R1-R3), intensely fractured, laminated, polished surfaces, dips 60°-70°.
-fracture zone, core recovered in small pieces.
-yellow and red-brown infilling along foliation plane, approximately 2mm thick.
-fracture zone, randomly oriented, no infilling.

METASEDIMENTARY META CONGLOMERATE: gray and light gray, slightly weathered, hard (R3), laminated with 60°-70° dip, slightly fractured, stretched and sheared gravels.
-foliation 74° dip.
-fracture, 20° dip, smooth to slightly rough surface, stepped, no infill.
-fracture, 20° dip, smooth to slightly rough surface, stepped, no infill.
-fracture, 20° dip, smooth to slightly rough surface, stepped, no infill.
-fracture zone, generally dips 10°-20°, breaks along foliation, smooth surfaces, no infill.
-intensely fractured, randomly oriented, polished surfaces, no infill.

ELEVATION (m): 981, 978, 975, 972, 969, 966, 963, 960, 957, 954, 951, 948, 945, 942, 939, 936, 933, 930

REC=95% RQD=60%; REC=95% RQD=0%; REC=50% RQD=0%; REC=100% RQD=60%; REC=100% RQD=40%; REC=90% RQD=30%; REC=100% RQD=0%; REC=100% RQD=20%; REC=100% RQD=40%; REC=100% RQD=40%; REC=100% RQD=60%; REC=90% RQD=90%; REC=90% RQD=50%; REC=100% RQD=30%; REC=100% RQD=25%; REC=100% RQD=0%; REC=100% RQD=80%; REC=100% RQD=30%; REC=100% RQD=80%; REC=100% RQD=75%; REC=100% RQD=70%; REC=100% RQD=0%; REC=80% RQD=20%; REC=60% RQD=0%; REC=100% RQD=30%; REC=100% RQD=35%; REC=100% RQD=50%; REC=100% RQD=0%; REC=100% RQD=0%

9/8/2006

17+20 17+40 17+60 17+80 18+00 18+20 18+40 18+60 18+80

PROFILE

HOR. 1:500
VER. 1:80

Doug Brittsan
DESIGN OVERSIGHT
9-17-09
SIGN OFF DATE

DRAWN BY A. Sanchez
CHECKED BY P. Holland, CEG

Kleinfelder Inc.
FIELD INVESTIGATION BY:
DATE: July-Sept 2006

ORIGINAL SCALE IN MILLIMETERS FOR REDUCED PLANS

PREPARED FOR THE STATE OF CALIFORNIA
DEPARTMENT OF TRANSPORTATION

DIVISION OF ENGINEERING SERVICES
STRUCTURE DESIGN
DESIGN BRANCH 1

CU 02
EA 373101

FILE => 09-0077-z-ttb10.dgn

DISCARD PRINTS BEARING EARLIER REVISION DATES

REVISION DATES (PRELIMINARY STAGE ONLY)
1-28-08
1-9-09
9-21-09
09-22-09

BRIDGE NO. 09-0077
KILOMETER POST 56.8

SPANISH CREEK BRIDGE (REPLACE)

LOG OF TEST BORINGS 10 OF 21

SHEET 44 OF 55

Caltrans Metric

KLEINFELDER INC.
3077 FITE CIR.
SACRAMENTO, CA 95826

REGISTERED CIVIL ENGINEER 7-9-09

11-2-09
PLANS APPROVAL DATE

The State of California or its officers or agents shall not be responsible for the accuracy or completeness of electronic copies of this plan sheet.

REGISTERED PROFESSIONAL ENGINEER
KENNETH G. SOMENSEN
No. GE 2520
Exp. 9-30-10
GEOTECHNICAL
STATE OF CALIFORNIA

DIST	COUNTY	ROUTE	KILOMETER POST TOTAL PROJECT	SHEET No	TOTAL SHEETS
02	PLA	70	56.5/57.2	131	149

USERNAME => trmikesl DATE PLOTTED => 10-NOV-2009 TIME PLOTTED => 07:32

DIST	COUNTY	ROUTE	KILOMETER POST TOTAL PROJECT	SHEET No	TOTAL SHEETS
02	Plu	70	56.5/57.2	132	149

REGISTERED CIVIL ENGINEER 7-9-09

11-2-09
PLANS APPROVAL DATE

REGISTERED PROFESSIONAL ENGINEER KENNETH G. SORENSEN No. GE 2520 Exp. 9-30-10 GEOTECHNICAL STATE OF CALIFORNIA

The State of California or its officers or agents shall not be responsible for the accuracy or completeness of electronic copies of this plan sheet.

KLEINFELDER INC.
3077 FITE CIR.
SACRAMENTO, CA 95826

LEGEND OF BORING OPERATIONS

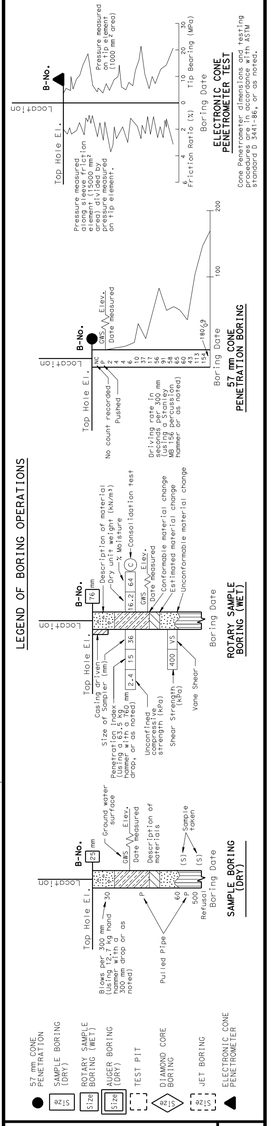

LEGEND OF EARTH MATERIALS

GRAVEL, SAND, SILT, CLAY, SANDY CLAY or CLAYEY SAND, SANDY SILT or SILTY SAND, SILTY CLAY, CLAYEY SILT, PEAT and/or ORGANIC MATTER, FILL MATERIAL, COBBLE, IGNEOUS ROCK, SEDIMENTARY ROCK, METAMORPHIC

CONSISTENCY CLASSIFICATION FOR SOILS

According to the Standard Penetration Test

SPT N-Value (Blows/0.3m)	Granular	SPT N-Value (Blows/0.3m)	Cohesive
0-4	Very Loose	<2	Very Soft
5-10	Loose	2-4	Soft
11-30	Medium Dense	5-8	Firm
31-50	Dense	9-15	Stiff
>50	Very Dense	16-30	Very stiff
		>31	Hard

NOTE: Classification of earth material as shown on this sheet is based upon field inspection and is not to be construed to imply mechanical analysis.

WEATHERING DESCRIPTORS

Modified from United States Bureau of Reclamation, Engineering Geology Field manual.

Descriptors		Diagnostic features					
		Chemical weathering-Discoloration and/or oxidation		Mechanical weathering-Grain boundary conditions (disaggregation) primarily for granitics and some coarse-grained sediments	Texture and solutioning		General characteristics (strength, excavation, etc.)§
Alphanumeric descriptor	Descriptive term	Body of rock	Fracture surfaces †		Texture	Solutioning	
W1	Fresh	No discoloration, not oxidized.	No discoloration or oxidation.	No separation, intact (tight).	No change.	No solutioning.	Hammer rings when crystalline rocks are struck. Almost always rock excavation except for naturaly weak or weakly cemented rocks such as siltstones or shales.
W2	Slightly weathered to fresh°						
W3	Slightly weathered	Discoloration or oxidation is limited to surface of, or short distance from, fractures; some feldspar crystals are dull.	Minor to complete discoloration or oxidation of most surfaces.	No visible separation, intact (tight).	Preserved.	Minor leaching of some soluble minerals may be noted.	Hammer rings when crystalline rocks are struck. Body of rock not weakened. With few exceptions, such as siltstones or shales, classified as rock excavation.
W4	Moderately to slightly weathered°						
W5	Moderately weathered	Discoloration or oxidation extends from fractures usually throughout; Fe-Mg minerals are "rusty," feldspar crystals are "cloudy."	All fracture surfaces are discolored or oxidized.	Partial separation of boundaries visible.	Generally preserved.	Soluble minerals may be mostly leached.	Hammer does not ring when rock is struck. Body of rock is slightly weakened. Depending on fracturing, usually is rock excavation except in naturally weak rocks such as siltstones or shales.
W6	Intensely to moderately weathered°						
W7	Intensely weathered	Discoloration or oxidation throughout; all feldspars and Fe-Mg minerals are altered to clay to some extent; or chemical alteration produces in-situ disaggregation, see grain boundary conditions.	All fracture surfaces are discolored or oxidized, surfaces friable.	Partial separation, rock is friable; in semi-arid conditions granitics are disaggregated.	Texture altered by chemical disintegra-tion (hy-dration, argillation).	Leaching of soluble minerals may be complete.	Dull sound when struck with hammer, usually can be broken with moderate to heavy manual pressure or by light hammer blow without reference to planes of weakness such as incipient or hairline fractures, or veinlets. Rock is significantly weakened. Usually common excavation.
W8	Very intensely weathered						
W9	Decomposed	Discolored or oxidized throughout, but resistant minerals such as quartz may be unaltered; all feldspars and Fe-Mg minerals are completely altered to clay.		Complete separation of grain boundaries (disaggregated).	Resembles a soil, partial or complete remnant rock structure may be preserved; leaching of soluble minerals usually complete.		Can be granulated by hand. Always common excavation. Resistant minerals such as quartz may be present as "stringers" or "dikes."

Note: This chart and its horizontal categories are more readily applied to rocks with feldspars and mafic minerals. Weathering in various sedimentary rocks, particularly limestones and poorly indurated sediments, will not always fit the categories established. This chart and weathering categories may have to be modified for particular site conditions or alteration such as hydrothermal effects; however, the basic framework and similar descriptors are to be used.

° Combination descriptors are permissible where equal distribution of both weathering characteristics are present over significant intervals or where characteristics present are "in between" the diagnostic feature. However, dual descriptors should not be used where significant, identifiable zones can be delineated. When given as a range, only two adjacent terms may be combined. "Decomposed to slightly weathered," or "moderately weathered to fresh" are not acceptable.

† Does not include directional weathering along shears or faults and their associated features. For example, a shear zone that carried weathering to great depths into a fresh rock mass would not require the rock mass to be classified as weathered.

§ These are generalizations and should not be used as diagnostic features for weathering or excavation classification. These characteristics vary to a large extent based on naturally weak materials or cementation and type of excavation.

RQD LOGGING

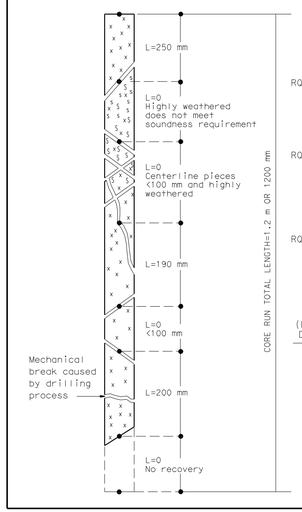

$$RQD = \frac{\sum \text{Length of sound core pieces} > 100 \text{ mm}}{\text{Total core run length}}$$

$$RQD = \frac{250+190+200}{1200} \times 100\%$$

RQD = 53% (fair)

RQD (ROCK QUALITY DESIGNATION)	DESCRIPTION OF ROCK QUALITY
0 - 25%	VERY POOR
25 - 50%	POOR
50 - 75%	FAIR
75 - 90%	GOOD
90 - 100%	EXCELLENT

After Deere & Deere, 1989

BEDDING, FOLIATION, OR FLOW TEXTURE DESCRIPTORS

Descriptors	Thickness / Spacing
Massive	Greater than 3 m
Very thickly (bedded, foliated, or banded)	1 to 3 m
Thickly	300 mm to 1 m
Moderately	100 to 300 mm
Thinly	30 to 100 mm
Very thinly	10 to 30 mm
Laminated (intensely foliated or banded)	Less than 10 mm

Modified from United States Bureau of Reclamation, Engineering Geology Field manual.

FRACTURE DENSITY

Modified from United States Bureau of Reclamation, Engineering Geology Field manual.

FRACTURE DENSITY- Based on the spacing of all natural fractures in an exposure or core recovery lengths in boreholes; excludes mechanical breaks, shears, and shear zones; however, shear-distributed zones (fracturing outside the shear) are included. Descriptors for fracture density apply to all rock exposures such as tunnel walls, dozer trenches, outcrops, or foundation cut slopes and inverts, as well as boreholes. Descriptive criteria presented below are based on borehole cores where lengths are measured along the core axis, for other exposures the criteria is distance measured between fractures (size of blocks).

UNFRACTURED (FD0): No fractures.

VERY SLIGHTLY FRACTURED (FD1): Core recovered mostly in lengths greater than 1 m.

SLIGHTLY TO VERY SLIGHTLY FRACTURED (FD2)*

SLIGHTLY FRACTURED (FD3): Core recovered mostly in lengths from 300 to 1000 mm, with few scattered lengths less than 300 mm or greater than 1000 mm.

MODERATELY TO SLIGHTLY FRACTURED (FD4)*

MODERATELY FRACTURED (FD5): Core recovered mostly in 100 to 300 mm lenghts with most lengths about 200 mm.

INTENSELY TO MODERATELY FRACTURED (FD6)*

INTENSELY FRACTURED (FD7): Lengths average from 30 to 100 mm with scattered fragmented intervals. Core recovered mostly in lengths less than 100 mm.

VERY INTENSELY TO INTENSELY FRACTURED (FD8)*

VERY INTENSELY FRACTURED (FD9): Core recovered mostly as chips and fragments with a few scattered short core lengths.

* Combinations of fracture densities (e.g. Very intensely to intensely fractured, or Moderately to slightly fractured) are used where equal distribution of both fracture density characteristics are presently over a significant interval or exposure, or where characteristics are "in between" the descriptor definitions.

ROCK HARDNESS/STRENGTH DESCRIPTORS

Alphanumeric Descriptor	Descriptor	Criteria
H1	Extremely hard	Core, fragment, or exposure cannot be scratched with knife or sharp pick; can only be chipped with repeated heavy hammer blows.
H2	Very hard	Cannot be scratched with knife of sharp pick. Core or fragment breaks with repeated heavy hammer blows.
H3	Hard	Can be scratched with knife or sharp pick with difficulty (heavy pressure). Heavy hammer blow required to break specimen.
H4	Moderately hard	Can be scratched with knife or sharp pick with light or moderate pressure. Core or fragment breaks with moderate hammer blow.
H5	Moderately soft	Can be grooved 2 mm deep by knife or sharp pick with moderate or heavy pressure. Core or fragment breaks with light hammer blow or heavy manual pressure.
H6	Soft	Can be grooved or gouged easily by knife or sharp pick with light pressure, can be scratched with fingernail. Breaks with light to moderate manual pressure.
H7	Very soft	Can be readily indented, grooved or gouged with fingernail, or carved with a knife. Breaks with light manual pressure.

Any bedrock unit softer than H7, very soft, is to be described using ASTM D-2488 consistency descriptors.

Note: Although "sharp pick" is included in these definitions, descriptions of ability to be scratched, grooved or gouged by a knife is the preferred criteria.

Modified from United States Bureau of Reclamation, Engineering Geology Field manual.

Doug Brittsan
DESIGN OVERSIGHT
9-17-09
SIGN OFF DATE

DRAWN BY A. Sanchez
CHECKED BY P. Holland, CEG

Kleinfelder Inc.
FIELD INVESTIGATION BY:
DATE: July-Sept 2006

PREPARED FOR THE STATE OF CALIFORNIA DEPARTMENT OF TRANSPORTATION

DIVISION OF ENGINEERING SERVICES STRUCTURE DESIGN
DESIGN BRANCH 1

BRIDGE NO. 09-0077
KILOMETER POST 56.8

SPANISH CREEK BRIDGE (REPLACE)

LOG OF TEST BORINGS 11 OF 21

CIVIL LOG OF TEST BORINGS SHEET (METRIC) (REV. 2/1/00)

ORIGINAL SCALE IN MILLIMETERS FOR REDUCED PLANS 0 10 20 30 40 50 60 70 80 90 100

CU 02
EA 373101

DISREGARD PRINTS BEARING EARLIER REVISION DATES

REVISION DATES (PRELIMINARY STAGE ONLY) 12-8-06 1-8-09 9-12-09 09-22-09

SHEET 45 OF 55

FILE => 09-0077-z-ltb11.dgn

USERNAME => trmikesl DATE PLOTTED => 10-NOV-2009 TIME PLOTTED => 07:32

DIST	COUNTY	ROUTE	KILOMETER POST TOTAL PROJECT	SHEET No	TOTAL SHEETS
02	Plu	70			

REGISTERED CIVIL ENGINEER

PLANS APPROVAL DATE

The State of California or its officers or agents shall not be responsible for the accuracy or completeness of electronic copies of this plan sheet.

REGISTERED PROFESSIONAL ENGINEER Mark DeSalvatore No. 39499 Exp. 12-31-01 CIVIL STATE OF CALIFORNIA

Caltrans Metric

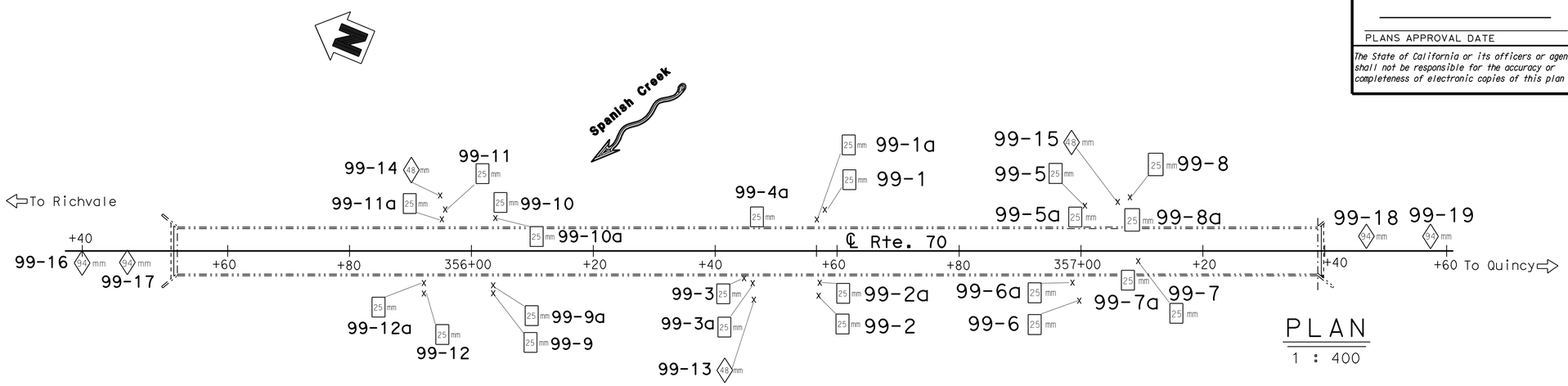

PLAN

1 : 400

BENCH MARK

BM CM 35.32 Elev. 971.71 m

DIVISION OF ENGINEERING SERVICES - GEOTECHNICAL SERVICES

This Bridge No. 09-0015 Log of Test Borings sheet is considered an informational document only. As such, the State of California registration seal with signature, license number and registration certificate expiration date confirm that this is a true and accurate copy of the original document. This drawing is available and presented only for the convenience of any bidder, contractor or other interested party.

DIST.	COUNTY	ROUTE	KILOMETER POST-TOTAL PROJECT	Sheet No.	Total Sheets
02	Plu	70	56.5/57.2	133	149

REGISTERED CIVIL ENGINEER — DATE 7-9-09

REGISTERED PROFESSIONAL ENGINEER KENNETH G. SORENSEN No. GE 2520 Exp. 9-30-10 CIVIL STATE OF CALIFORNIA

SPANISH CREEK BRIDGE (REPLACE)

LOG OF TEST BORINGS 12 OF 21

NOTE: A COPY OF THIS LOG OF TEST BORINGS IS AVAILABLE AT OFFICE OF GEOTECHNICAL SUPPORT, SACRAMENTO, CALIFORNIA

CU: 02 EA: 373101 — BRIDGE No. 09-0077 — Sheet 46 of 55

Revisions made to this Log of Test Borings from the original 1999 Log of Test Borings are the addition of the following table and notes:

To accompany plans dated 11-2-09

Notes:

1. See the Spanish Creek Bridge General Plan (Bridge No. 09-0015) revision date 12-15-98) for "CL Rte. 70" alignment and stationing.
2. Caltrans Design West, Branch S-7 produced the data presented in the table below. The data are the locations for the Bridge No. 09-0015 Log of Test Borings referenced to the proposed new structure location (per the "A70" alignment). This table is presented on the Bridge No. 09-0015 Log of Test Boring sheets for the convenience of any bidder, contractor or other interested party.

Boring	"A70" LINE Station	Offset from "A-70" Line
99-16	15+43.03	14.00 m Lt
99-17	15+50.41	13.83 m Lt

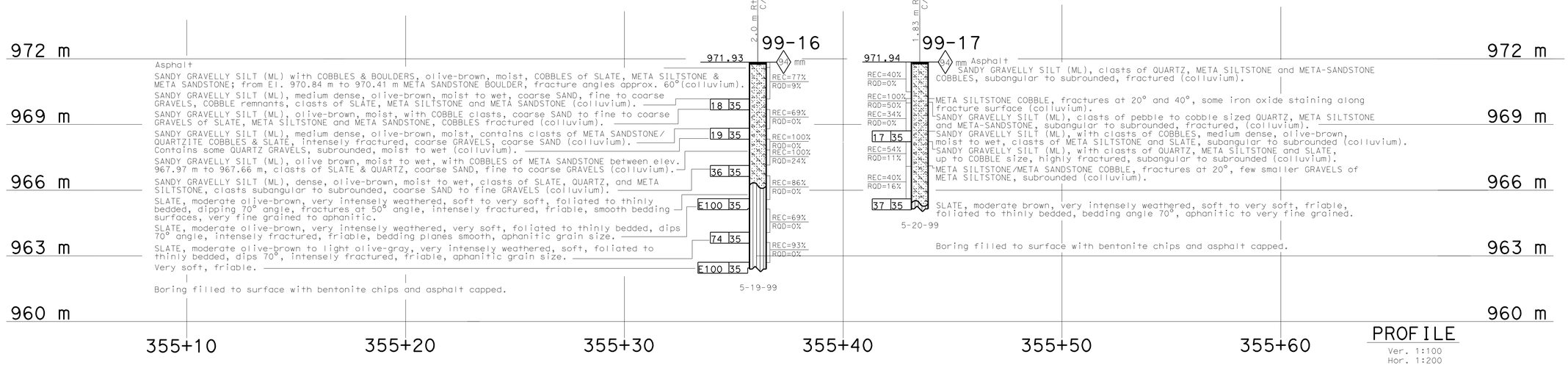

PROFILE

Ver. 1:100
Hor. 1:200

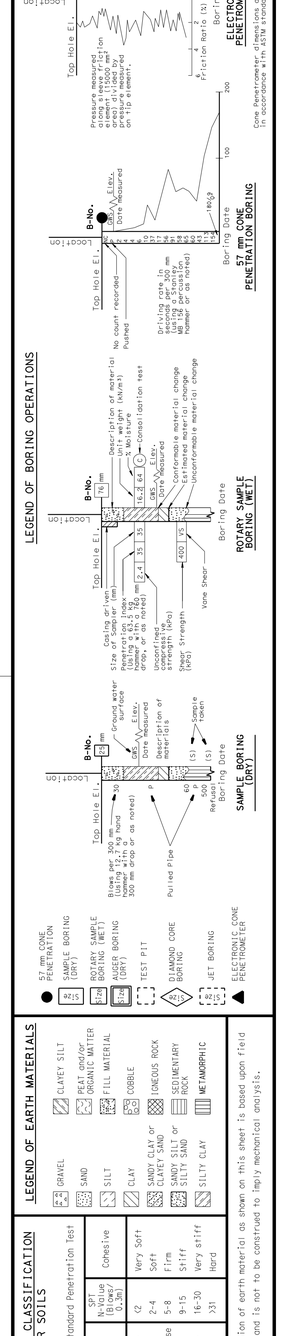

ENGINEERING SERVICE CENTER	STRUCTURE FOUNDATIONS
DRAWN BY K. Wahl 7/99	
CHECKED BY E. Neupert 8/99	

FIELD INVESTIGATION BY: E. Neupert & H. Valencia

STATE OF CALIFORNIA DEPARTMENT OF TRANSPORTATION

DIVISION OF STRUCTURES STRUCTURE DESIGN 1

BRIDGE NO. 09-0015 — KILOMETER POST 56.8

SPANISH CREEK BRIDGE (RETROFIT)

LOG OF TEST BORINGS 1 OF 10

CU 02 EA 259531

DISREGARD PRINTS BEARING EARLIER REVISION DATES — REVISION DATES (PRELIMINARY STAGE ONLY) 9-8-99 9-20-99 9-29-99 09-22-09 — SHEET OF

ORIGINAL SCALE IN MILLIMETERS FOR REDUCED PLANS 0 10 20 30 40 50 60 70 80 90 100

OSF CIVIL LOG OF TEST BORINGS SHEET (METRIC) (REV. 3/1/99)

FILE => 09-0077-z-1tb12.dgn

USERNAME => trmikesl DATE PLOTTED => 10-NOV-2009 TIME PLOTTED => 07:33

DIST	COUNTY	ROUTE	KILOMETER POST TOTAL PROJECT	SHEET No	TOTAL SHEETS
02	Plu	70			

REGISTERED CIVIL ENGINEER

PLANS APPROVAL DATE

The State of California or its officers or agents shall not be responsible for the accuracy or completeness of electronic copies of this plan sheet.

REGISTERED PROFESSIONAL ENGINEER — Mark DeSalvatore — No. 39499 — Exp. 12-31-01 — CIVIL — STATE OF CALIFORNIA

DIVISION OF ENGINEERING SERVICES - GEOTECHNICAL SERVICES

This Bridge No. 09-0015 Log of Test Borings sheet is considered an informational document only. As such, the State of California registration seal with signature, license number and registration certificate expiration date confirm that this is a true and accurate copy of the original document. This drawing is available and presented only for the convenience of any bidder, contractor or other interested party.

DIST.	COUNTY	ROUTE	KILOMETER POST-TOTAL PROJECT	Sheet No.	Total Sheets
02	Plu	70	56.5/57.2	134	149

REGISTERED CIVIL ENGINEER — DATE 7-9-09

SPANISH CREEK BRIDGE (REPLACE)

LOG OF TEST BORINGS 13 OF 21

NOTE: A COPY OF THIS LOG OF TEST BORINGS IS AVAILABLE AT OFFICE OF GEOTECHNCIAL SUPPORT, SACRAMENTO, CALIFORNIA

CU: 02
EA: 373101

BRIDGE No. 09-0077

Sheet 47 of 55

REGISTERED PROFESSIONAL ENGINEER — KENNETH G. SORENSEN — No. GE 2520 — Exp. 9-30-10 — CIVIL — STATE OF CALIFORNIA

FOR PLAN VIEW, SEE
"LOG OF TEST BORINGS" SHEET 1 OF 10

Revisions made to this Log of Test Borings from the original 1999 Log of Test Borings are the addition of the following table and notes:

To accompany plans dated 11-2-09

Notes:

1. See the Spanish Creek Bridge General Plan (Bridge No. 09-0015) revision date 12-15-98) for "CL Rte. 70" alignment and stationing.
2. Caltrans Design West, Branch S-7 produced the data presented in the table below. The data are the locations for the Bridge No. 09-0015 Log of Test Borings referenced to the proposed new structure location (per the "A70" alignment). This table is presented on the Bridge No. 09-0015 Log of Test Boring sheets for the convenience of any bidder, contractor or other interested party.

Boring	"A70" LINE Station	Offset from "A-70" Line
99-11	16+02.58	18.77 m Lt
99-11a	16+01.98	17.18 m Lt
99-12	15+99.13	18.95 m Lt
99-11a	15+99.13	17.26 m Lt

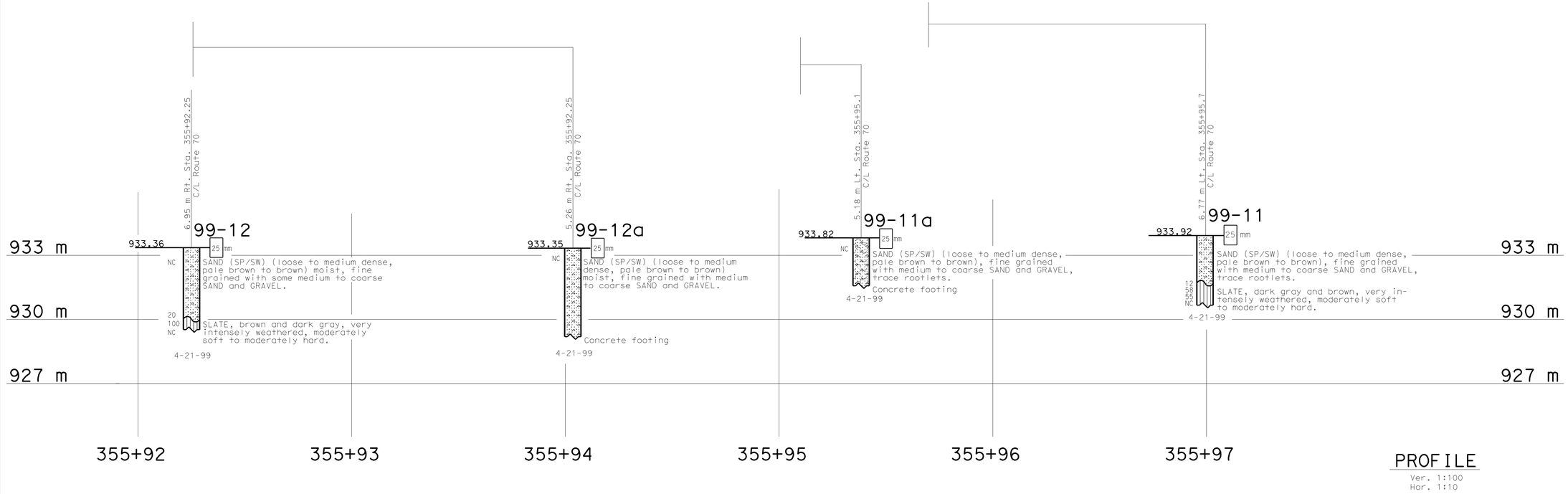

PROFILE
Ver. 1:100
Hor. 1:10

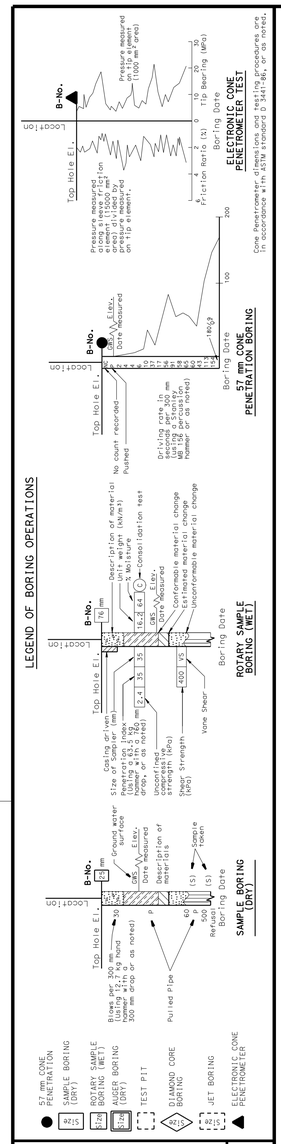

ENGINEERING SERVICE CENTER	STRUCTURE FOUNDATIONS
DRAWN BY K. Wahl 8/99	
CHECKED BY E. Neupert 8/99	

FIELD INVESTIGATION BY: E. Neupert & H. Valencia

STATE OF CALIFORNIA DEPARTMENT OF TRANSPORTATION

DIVISION OF STRUCTURES STRUCTURE DESIGN 1

BRIDGE NO. 09-0015
KILOMETER POST 56.8

SPANISH CREEK BRIDGE (RETROFIT)

LOG OF TEST BORINGS 2 OF 10

CU 02
EA 259531

DISREGARD PRINTS BEARING EARLIER REVISION DATES

REVISION DATES (PRELIMINARY STAGE ONLY) 9-8-09 09-22-09

SHEET OF

ORIGINAL SCALE IN MILLIMETERS FOR REDUCED PLANS 0 10 20 30 40 50 60 70 80 90 100

OSF CIVIL LOG OF TEST BORINGS SHEET (METRIC) (REV. 3/1/99)

FILE => 09-0077-z-1tb13.dgn

USERNAME => trmikesl DATE PLOTTED => 10-NOV-2009 TIME PLOTTED => 07:33

DIST	COUNTY	ROUTE	KILOMETER POST TOTAL PROJECT	SHEET No	TOTAL SHEETS
02	Plu	70			

Caltrans Metric

REGISTERED CIVIL ENGINEER

PLANS APPROVAL DATE

The State of California or its officers or agents shall not be responsible for the accuracy or completeness of electronic copies of this plan sheet.

REGISTERED PROFESSIONAL ENGINEER Mark DeSalvatore No. 39499 Exp. 12-31-01 CIVIL STATE OF CALIFORNIA

DIVISION OF ENGINEERING SERVICES - GEOTECHNICAL SERVICES

This Bridge No. 09-0015 Log of Test Borings sheet is considered an informational document only. As such, the State of California registration seal with signature, license number and registration certificate expiration date confirm that this is a true and accurate copy of the original document. This drawing is available and presented only for the convenience of any bidder, contractor or other interested party.

DIST.	COUNTY	ROUTE	KILOMETER POST-TOTAL PROJECT	Sheet No.	Total Sheets
02	Plu	70	56.5/57.2	135	149

REGISTERED CIVIL ENGINEER — 7-9-09 DATE

REGISTERED PROFESSIONAL ENGINEER KENNETH G. SORENSEN No. GE 2520 Exp. 9-30-10 CIVIL STATE OF CALIFORNIA

SPANISH CREEK BRIDGE (REPLACE)

LOG OF TEST BORINGS 14 OF 21

NOTE: A COPY OF THIS LOG OF TEST BORINGS IS AVAILABLE AT OFFICE OF GEOTECHNICAL SUPPORT, SACRAMENTO, CALIFORNIA

CU: 02
EA: 373101

BRIDGE No. 09-0077

Sheet 48 of 55

Revisions made to this Log of Test Borings from the original 1999 Log of Test Borings are the addition of the following table and notes:

To accompany plans dated 11-2-09

Notes:

1. See the Spanish Creek Bridge General Plan (Bridge No. 09-0015) revision date 12-15-98) for "CL Rte. 70" alignment and stationing.
2. Caltrans Design West, Branch S-7 produced the data presented in the table below. The data are the locations for the Bridge No. 09-0015 Log of Test Borings referenced to the proposed new structure location (per the "A70" alignment). This table is presented on the Bridge No. 09-0015 Log of Test Boring sheets for the convenience of any bidder, contractor or other interested party.

Boring	"A70" LINE Station	Offset from "A-70" Line
99-14	16+01.78	21.14 m Lt

FOR PLAN VIEW, SEE "LOG OF TEST BORINGS" SHEET 1 OF 10

PROFILE
Ver. 1:100
Hor. 1:10

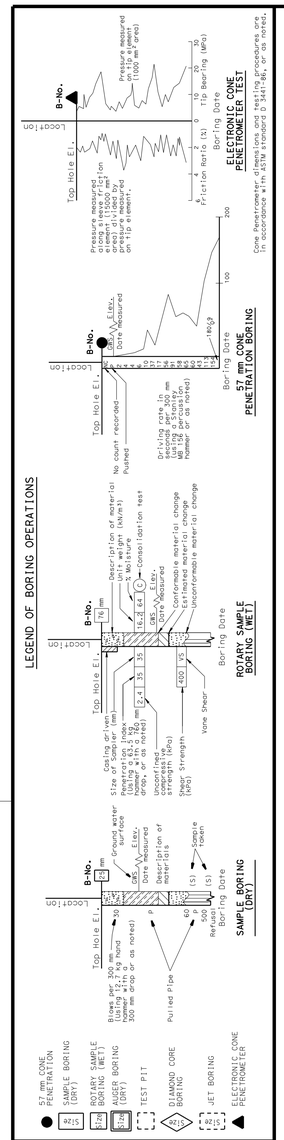

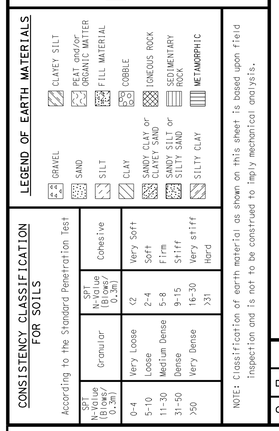

CONSISTENCY CLASSIFICATION FOR SOILS

According to the Standard Penetration Test

SPT N-Value (Blows/0.3m)	Granular	SPT N-Value (Blows/0.3m)	Cohesive
0-4	Very Loose	<2	Very Soft
5-10	Loose	2-4	Soft
11-30	Medium Dense	5-8	Firm
31-50	Dense	9-15	Stiff
>50	Very Dense	16-30	Very stiff
		>31	Hard

NOTE: Classification of earth material as shown on this sheet is based upon field inspection and is not to be construed to imply mechanical analysis.

ENGINEERING SERVICE CENTER	STRUCTURE FOUNDATIONS
DRAWN BY K. Wahl 8/99	
CHECKED BY E. Neupert 8/99	

FIELD INVESTIGATION BY: E. Neupert & H. Valencia

STATE OF CALIFORNIA DEPARTMENT OF TRANSPORTATION

DIVISION OF STRUCTURES STRUCTURE DESIGN 1

CU 02
EA 259531

BRIDGE NO. 09-0015
KILOMETER POST 56.8

SPANISH CREEK BRIDGE (RETROFIT)

LOG OF TEST BORINGS 3 OF 10

ORIGINAL SCALE IN MILLIMETERS FOR REDUCED PLANS 0 10 20 30 40 50 60 70 80 90 100

DISREGARD PRINTS BEARING EARLIER REVISION DATES — REVISION DATES (PRELIMINARY STAGE ONLY) 9-8-99 9-20-99 09-22-09 SHEET OF

OSF CIVIL LOG OF TEST BORINGS SHEET (METRIC) (REV. 3/1/99)

FILE => 09-0077-z-ltb14.dgn

USERNAME => trmikest DATE PLOTTED => 10-NOV-2009 TIME PLOTTED => 07:33

DIST	COUNTY	ROUTE	KILOMETER POST TOTAL PROJECT	SHEET No	TOTAL SHEETS
02	Plu	70			

REGISTERED CIVIL ENGINEER

PLANS APPROVAL DATE

The State of California or its officers or agents shall not be responsible for the accuracy or completeness of electronic copies of this plan sheet.

REGISTERED PROFESSIONAL ENGINEER — Mark DeSalvatore — No. 39499 — Exp. 12-31-01 — CIVIL — STATE OF CALIFORNIA

FOR PLAN VIEW, SEE
"LOG OF TEST BORINGS" SHEET 1 OF 10

DIVISION OF ENGINEERING SERVICES - GEOTECHNICAL SERVICES

This Bridge No. 09-0015 Log of Test Borings sheet is considered an informational document only. As such, the State of California registration seal with signature, license number and registration certificate expiration date confirm that this is a true and accurate copy of the original document. This drawing is available and presented only for the convenience of any bidder, contractor or other interested party.

DIST.	COUNTY	ROUTE	KILOMETER POST-TOTAL PROJECT	Sheet No.	Total Sheets
02	Plu	70	56.5/57.2	136	149

REGISTERED CIVIL ENGINEER — DATE 7-9-09

REGISTERED PROFESSIONAL ENGINEER — KENNETH G. SORENSEN — No. GE 2520 — Exp. 9-30-08 — CIVIL — STATE OF CALIFORNIA

SPANISH CREEK BRIDGE (REPLACE)

LOG OF TEST BORINGS 15 OF 21

NOTE: A COPY OF THIS LOG OF TEST BORINGS IS AVAILABLE AT OFFICE OF GEOTECHNICAL SUPPORT, SACRAMENTO, CALIFORNIA

CU: 02
EA: 373101

BRIDGE No. 09-0077

Sheet 49 of 55

Revisions made to this Log of Test Borings from the original 1999 Log of Test Borings are the addition of the following table and notes:

Notes: *To accompany plans dated* 11-2-09

1. See the Spanish Creek Bridge General Plan (Bridge No. 09-0015) revision date 12-15-98) for "CL Rte. 70" alignment and stationing.

2. Caltrans Design West, Branch S-7 produced the data presented in the table below. The data are the locations for the Bridge No. 09-0015 Log of Test Borings referenced to the proposed new structure location (per the "A70" alignment). This table is presented on the Bridge No. 09-0015 Log of Test Boring sheets for the convenience of any bidder, contractor or other interested party.

Boring	"A70" LINE Station	Offset from "A-70" Line
99-9	16+10.48	18.86 m Lt
99-9a	16+10.48	17.49 m Lt
99-10	16+11.58	19.99 m Lt
99-10a	16+10.78	17.39 m Lt

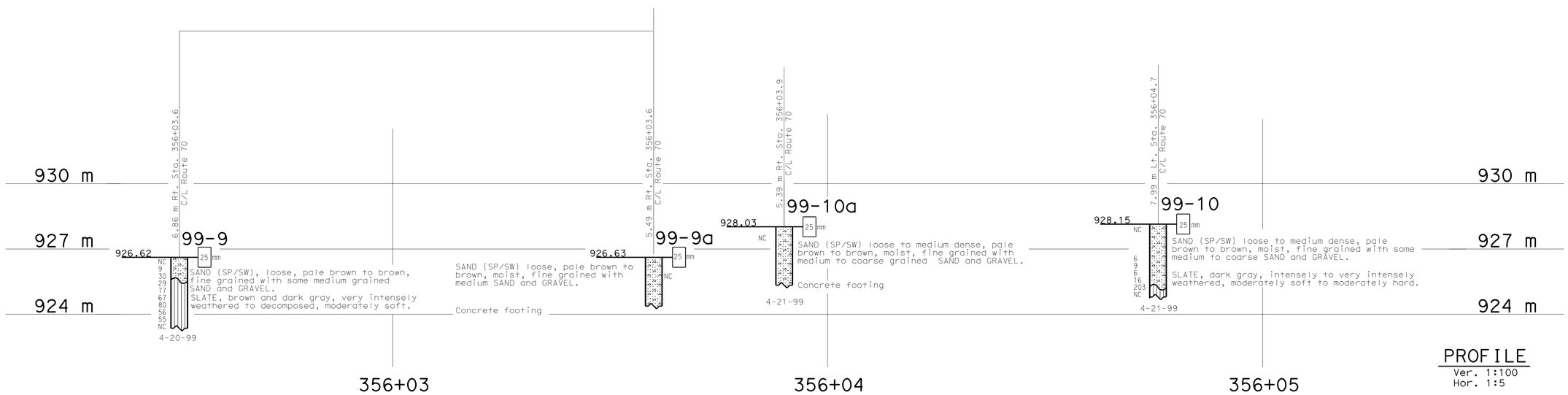

PROFILE
Ver. 1:100
Hor. 1:5

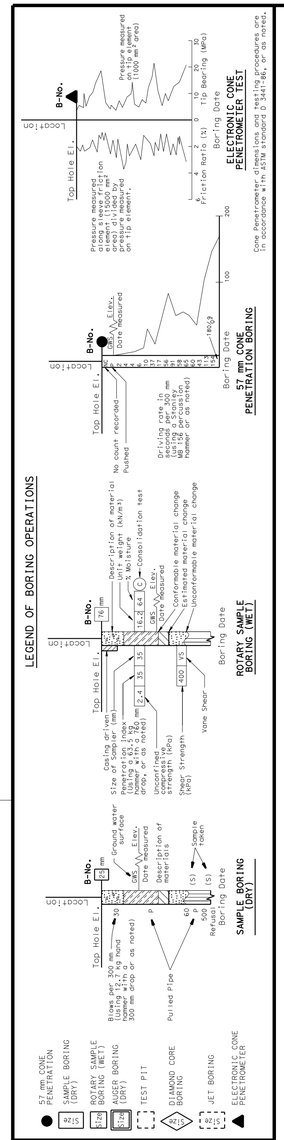

LEGEND OF EARTH MATERIALS

GRAVEL, SAND, SILT, CLAY, SANDY CLAY or CLAYEY SAND, SANDY SILT or SILTY SAND, SILTY CLAY, CLAYEY SILT, PEAT and/or ORGANIC MATTER, FILL MATERIAL, COBBLE, IGNEOUS ROCK, SEDIMENTARY ROCK, METAMORPHIC

CONSISTENCY CLASSIFICATION FOR SOILS

According to the Standard Penetration Test

SPT N-Value (Blows/0.3m)	Granular	SPT N-Value (Blows/0.3m)	Cohesive
0-4	Very Loose	<2	Very Soft
5-10	Loose	2-4	Soft
11-30	Medium Dense	5-8	Firm
31-50	Dense	9-15	Stiff
>50	Very Dense	16-30	Very stiff
		>31	Hard

NOTE: Classification of earth material as shown on this sheet is based upon field inspection and is not to be construed to imply mechanical analysis.

ENGINEERING SERVICE CENTER	STRUCTURE FOUNDATIONS
DRAWN BY	K. Wahl 8/99
CHECKED BY	E. Neupert 8/99

FIELD INVESTIGATION BY: E. Neupert & H. Valencia

STATE OF CALIFORNIA
DEPARTMENT OF TRANSPORTATION

DIVISION OF STRUCTURES
STRUCTURE DESIGN 1

BRIDGE NO. 09-0015
KILOMETER POST 56.8

SPANISH CREEK BRIDGE (RETROFIT)

LOG OF TEST BORINGS 4 OF 10

CU 02
EA 259531

DISREGARD PRINTS BEARING EARLIER REVISION DATES

REVISION DATES (PRELIMINARY STAGE ONLY): 8-4-99, 09-22-09

SHEET OF

ORIGINAL SCALE IN MILLIMETERS FOR REDUCED PLANS 0 10 20 30 40 50 60 70 80 90 100

OSF CIVIL LOG OF TEST BORINGS SHEET (METRIC) (REV. 3/1/99)

FILE => 09-0077-z-1tb15.dgn

USERNAME => trmikes1 DATE PLOTTED => 10-NOV-2009 TIME PLOTTED => 07:34

DIST	COUNTY	ROUTE	KILOMETER POST TOTAL PROJECT	SHEET No	TOTAL SHEETS
02	Plu	70			

Caltrans Metric

REGISTERED CIVIL ENGINEER

PLANS APPROVAL DATE

The State of California or its officers or agents shall not be responsible for the accuracy or completeness of electronic copies of this plan sheet.

REGISTERED PROFESSIONAL ENGINEER Mark DeSalvatore No. 39499 Exp. 12-31-01 CIVIL STATE OF CALIFORNIA

DIVISION OF ENGINEERING SERVICES - GEOTECHNICAL SERVICES

This Bridge No. 09-0015 Log of Test Borings sheet is considered an informational document only. As such, the State of California registration seal with signature, license number and registration certificate expiration date confirm that this is a true and accurate copy of the original document. This drawing is available and presented only for the convenience of any bidder, contractor or other interested party.

DIST.	COUNTY	ROUTE	KILOMETER POST-TOTAL PROJECT	Sheet No.	Total Sheets
02	Plu	70	56.5/57.2	137	149

REGISTERED CIVIL ENGINEER — DATE 7-9-09

REGISTERED PROFESSIONAL ENGINEER KENNETH G. SORENSEN No. GE 2520 Exp. 9-30-10 CIVIL STATE OF CALIFORNIA

SPANISH CREEK BRIDGE (REPLACE)

LOG OF TEST BORINGS 16 OF 21

NOTE: A COPY OF THIS LOG OF TEST BORINGS IS AVAILABLE AT OFFICE OF GEOTECHNCIAL SUPPORT, SACRAMENTO, CALIFORNIA

CU: 02 EA: 373101

BRIDGE No. 09-0077

Sheet 50 of 55

Revisions made to this Log of Test Borings from the original 1999 Log of Test Borings are the addition of the following table and notes:

To accompany plans dated 11-2-09

Notes:

1. See the Spanish Creek Bridge General Plan (Bridge No. 09-0015) revision date 12-15-98) for "CL Rte. 70" alignment and stationing.
2. Caltrans Design West, Branch S-7 produced the data presented in the table below. The data are the locations for the Bridge No. 09-0015 Log of Test Borings referenced to the proposed new structure location (per the "A70" alignment). This table is presented on the Bridge No. 09-0015 Log of Test Boring sheets for the convenience of any bidder, contractor or other interested party.

Boring	"A70" LINE Station	Offset from "A-70" Line
99-3	16+51.58	16.57 m Lt
99-3a	16+52.99	17.26 m Lt
99-4a	16+53.68	17.46 m Lt
99-13	16+53.13	20.02 m Lt

FOR PLAN VIEW, SEE "LOG OF TEST BORINGS" SHEET 1 OF 10

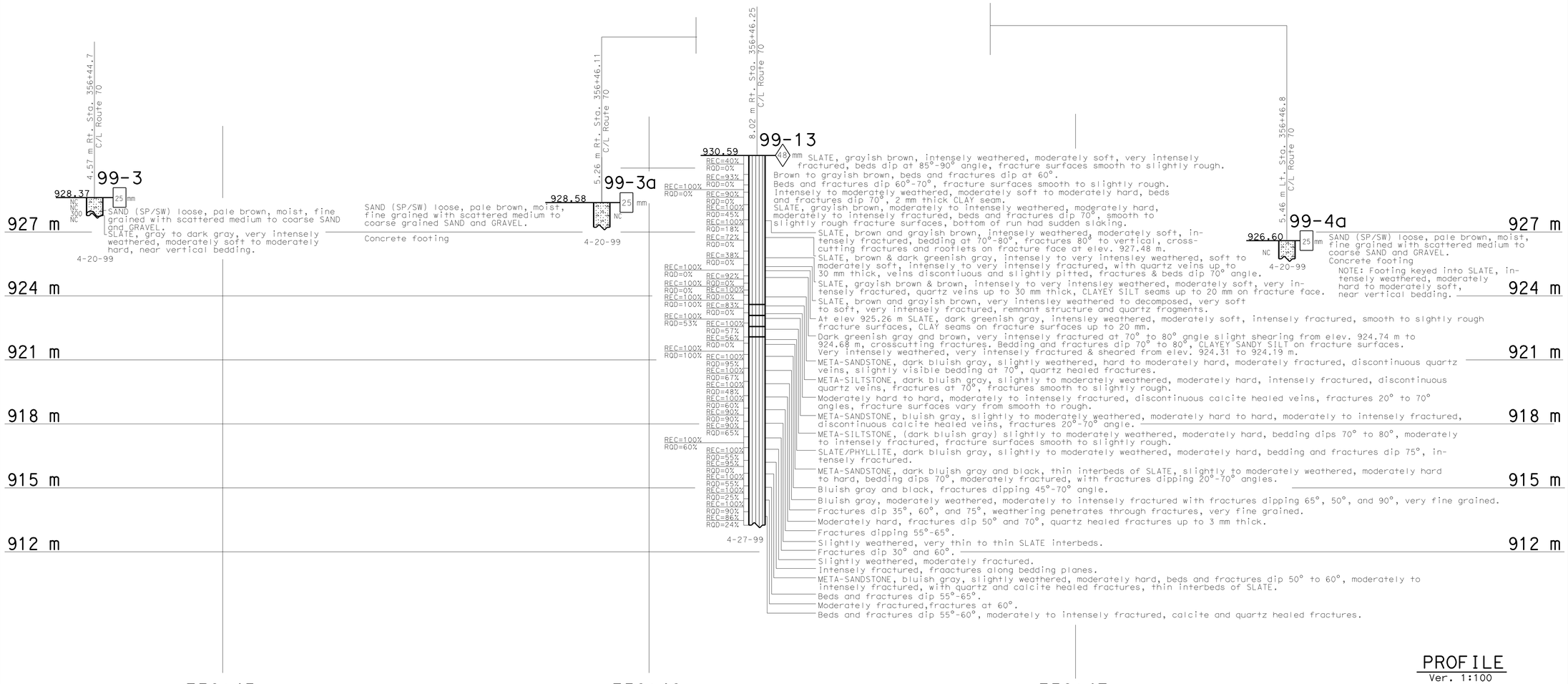

PROFILE
Ver. 1:100
Hor. 1:5

LEGEND OF BORING OPERATIONS

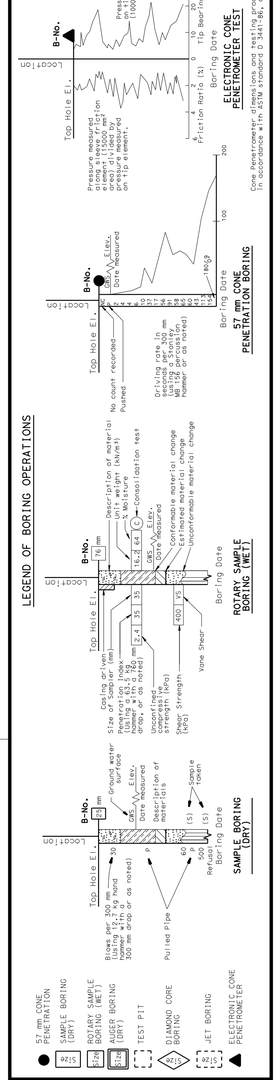

LEGEND OF EARTH MATERIALS

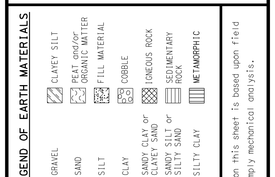

CONSISTENCY CLASSIFICATION FOR SOILS

According to the Standard Penetration Test

SPT N-Value (Blows/0.3ft)	Granular	SPT N-Value (Blows/0.3ft)	Cohesive
0-4	Very Loose	<2	Very Soft
5-10	Loose	2-4	Soft
11-30	Medium Dense	5-8	Firm
31-50	Dense	9-15	Stiff
>50	Very Dense	16-30	Very stiff
		>31	Hard

NOTE: Classification of earth material as shown on this sheet is based upon field inspection and is not to be construed to imply mechanical analysis.

ENGINEERING SERVICE CENTER	STRUCTURE FOUNDATIONS
DRAWN BY K. Wahl 8/99	
CHECKED BY E. Neupert 8/99	

FIELD INVESTIGATION BY: E. Neupert & H. Valencia

STATE OF CALIFORNIA DEPARTMENT OF TRANSPORTATION

DIVISION OF STRUCTURES STRUCTURE DESIGN 1

BRIDGE NO. 09-0015

KILOMETER POST 56.8

SPANISH CREEK BRIDGE (RETROFIT)

LOG OF TEST BORINGS 5 OF 10

ORIGINAL SCALE IN MILLIMETERS FOR REDUCED PLANS 0 10 20 30 40 50 60 70 80 90 100

CU 02 EA 259531

DISREGARD PRINTS BEARING EARLIER REVISION DATES

REVISION DATES (PRELIMINARY STAGE ONLY) 9-8-99 9-29-99 9-22-09

SHEET OF

OSF CIVIL LOG OF TEST BORINGS SHEET (METRIC) (REV. 3/1/99)

FILE => 09-0077-z-ltb16.dgn

USERNAME => trmikest DATE PLOTTED => 10-NOV-2009 TIME PLOTTED => 07:34

DIST	COUNTY	ROUTE	KILOMETER POST TOTAL PROJECT	SHEET No	TOTAL SHEETS
02	Plu	70			

REGISTERED CIVIL ENGINEER

PLANS APPROVAL DATE

REGISTERED PROFESSIONAL ENGINEER — Mark DeSalvatore — No. 39499 — Exp. 12-31-01 — CIVIL — STATE OF CALIFORNIA

The State of California or its officers or agents shall not be responsible for the accuracy or completeness of electronic copies of this plan sheet.

FOR PLAN VIEW, SEE
"LOG OF TEST BORINGS" SHEET 1 OF 10

DIVISION OF ENGINEERING SERVICES - GEOTECHNICAL SERVICES

This Bridge No. 09-0015 Log of Test Borings sheet is considered an informational document only. As such, the State of California registration seal with signature, license number and registration certificate expiration date confirm that this is a true and accurate copy of the original document. This drawing is available and presented only for the convenience of any bidder, contractor or other interested party.

DIST.	COUNTY	ROUTE	KILOMETER POST-TOTAL PROJECT	Sheet No.	Total Sheets
02	Plu	70	56.5/57.2	138	149

REGISTERED CIVIL ENGINEER — DATE 7-9-09

REGISTERED PROFESSIONAL ENGINEER — KENNETH G. SORENSEN — No. GE 2520 — Exp. 9-30-10 — CIVIL — STATE OF CALIFORNIA

SPANISH CREEK BRIDGE (REPLACE)

LOG OF TEST BORINGS 17 OF 21

NOTE: A COPY OF THIS LOG OF TEST BORINGS IS AVAILABLE AT OFFICE OF GEOTECHNICAL SUPPORT, SACRAMENTO, CALIFORNIA

CU: 02
EA: 373101

BRIDGE No. 09-0077

Sheet 51 of 55

Revisions made to this Log of Test Borings from the original 1999 Log of Test Borings are the addition of the following table and notes:

Notes: *To accompany plans dated* 11-2-09

1. See the Spanish Creek Bridge General Plan (Bridge No. 09-0015) revision date 12-15-98) for "CL Rte. 70" alignment and stationing.

2. Caltrans Design West, Branch S-7 produced the data presented in the table below. The data are the locations for the Bridge No. 09-0015 Log of Test Borings referenced to the proposed new structure location (per the "A70" alignment). This table is presented on the Bridge No. 09-0015 Log of Test Boring sheets for the convenience of any bidder, contractor or other interested party.

Boring	"A70" LINE Station	Offset from "A-70" Line
99-1	16+64.77	18.86 m Lt
99-1a	16+63.49	17.18 m Lt
99-2	16+63.76	19.38 m Lt
99-2a	16+63.49	17.18 m Lt

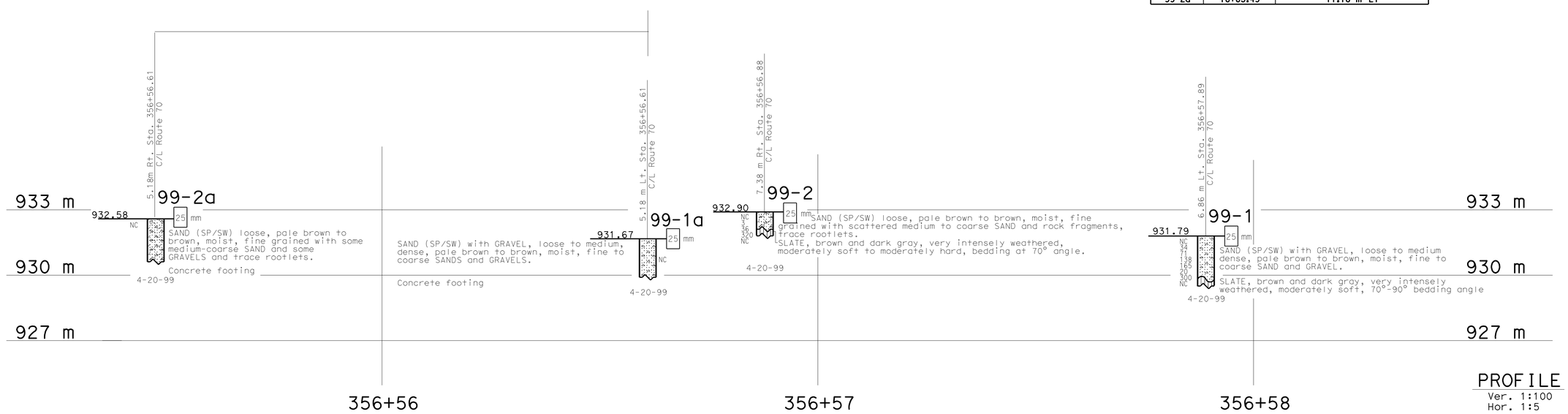

PROFILE
Ver. 1:100
Hor. 1:5

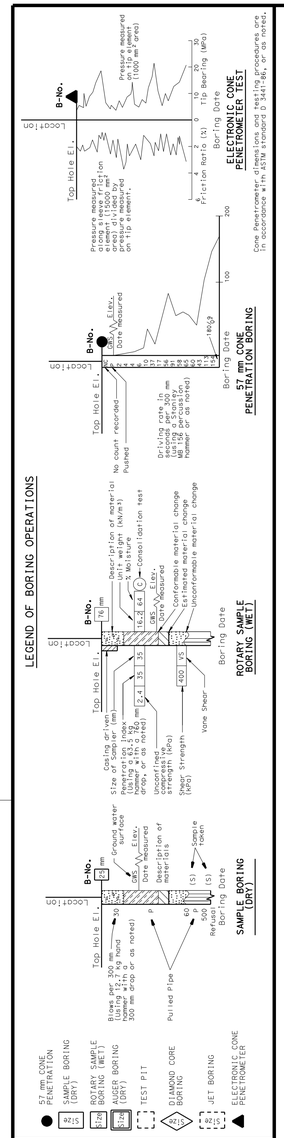

ENGINEERING SERVICE CENTER	STRUCTURE FOUNDATIONS
DRAWN BY	K. Wahl 8/99
CHECKED BY	E. Neupert 8/99

FIELD INVESTIGATION BY: E. Neupert & H. Valencia

STATE OF CALIFORNIA
DEPARTMENT OF TRANSPORTATION

DIVISION OF STRUCTURES
STRUCTURE DESIGN 1

BRIDGE NO. 09-0015
KILOMETER POST 56.8

SPANISH CREEK BRIDGE (RETROFIT)
LOG OF TEST BORINGS 6 OF 10

CU 02
EA 259531

DISREGARD PRINTS BEARING EARLIER REVISION DATES

REVISION DATES (PRELIMINARY STAGE ONLY) 9-5-99 9-20-99 SHEET OF

OSF CIVIL LOG OF TEST BORINGS SHEET (METRIC) (REV. 3/1/99)

ORIGINAL SCALE IN MILLIMETERS FOR REDUCED PLANS 0 10 20 30 40 50 60 70 80 90 100

FILE => 09-0077-z-1tb17.dgn

USERNAME => trmikesl DATE PLOTTED => 07:35

DIST	COUNTY	ROUTE	KILOMETER POST TOTAL PROJECT	SHEET No	TOTAL SHEETS
02	Plu	70			

REGISTERED CIVIL ENGINEER

PLANS APPROVAL DATE

REGISTERED PROFESSIONAL ENGINEER — Mark DeSalvatore — No. 39499 — Exp. 12-31-01 — CIVIL — STATE OF CALIFORNIA

The State of California or its officers or agents shall not be responsible for the accuracy or completeness of electronic copies of this plan sheet.

DIVISION OF ENGINEERING SERVICES - GEOTECHNICAL SERVICES

This Bridge No. 09-0015 Log of Test Borings sheet is considered an informational document only. As such, the State of California registration seal with signature, license number and registration certificate expiration date confirm that this is a true and accurate copy of the original document. This drawing is available and presented only for the convenience of any bidder, contractor or other interested party.

DIST.	COUNTY	ROUTE	KILOMETER POST-TOTAL PROJECT	Sheet No.	Total Sheets
02	Plu	70	56.5/57.2	139	149

REGISTERED CIVIL ENGINEER — DATE 7-9-09

REGISTERED PROFESSIONAL ENGINEER — KENNETH G. SORENSEN — No. GE 2520 — Exp. 9-30-10 — CIVIL — STATE OF CALIFORNIA

SPANISH CREEK BRIDGE (REPLACE)

LOG OF TEST BORINGS 18 OF 21

NOTE: A COPY OF THIS LOG OF TEST BORINGS IS AVAILABLE AT OFFICE OF GEOTECHNCIAL SUPPORT, SACRAMENTO, CALIFORNIA

CU: 02
EA: 373101

BRIDGE No. 09-0077

Sheet 52 of 55

Revisions made to this Log of Test Borings from the original 1999 Log of Test Borings are the addition of the following table and notes:

Notes: *To accompany plans dated* 11-2-09

1. See the Spanish Creek Bridge General Plan (Bridge No. 09-0015) revision date 12-15-98) for "CL Rte. 70" alignment and stationing.
2. Caltrans Design West, Branch S-7 produced the data presented in the table below. The data are the locations for the Bridge No. 09-0015 Log of Test Borings referenced to the proposed new structure location (per the "A70" alignment). This table is presented on the Bridge No. 09-0015 Log of Test Boring sheets for the convenience of any bidder, contractor or other interested party.

Boring	"A70" LINE Station	Offset from "A-70" Line
99-5	17+07.6	19.38 m Lt
99-5a	17+06.08	17.39 m Lt
99-6	17+06.57	20.08 m Lt
99-6a	17+05.47	17.18 m Lt

FOR PLAN VIEW, SEE
"LOG OF TEST BORINGS" SHEET 1 OF 10

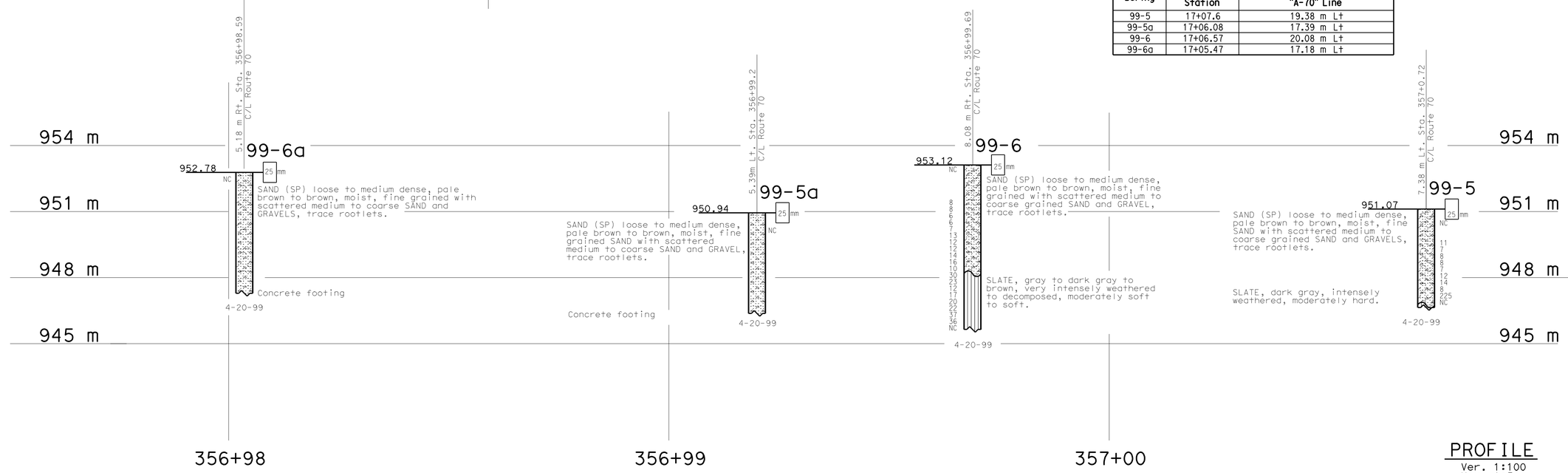

PROFILE
Ver. 1:100
Hor. 1:5

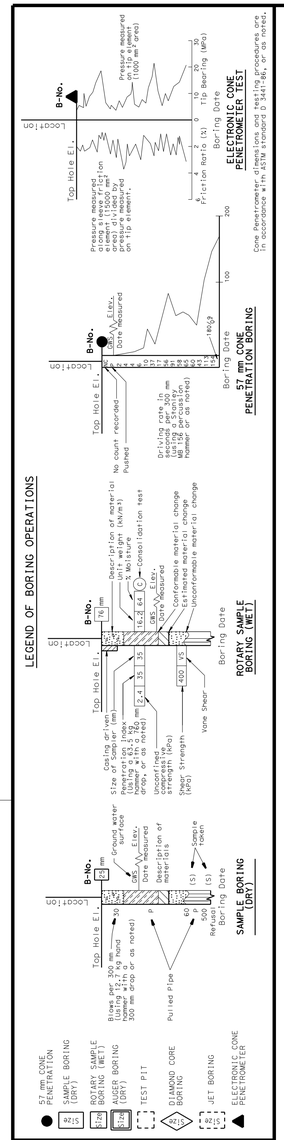

ENGINEERING SERVICE CENTER	STRUCTURE FOUNDATIONS
DRAWN BY	K. Wahl 7/99 & 8/99
CHECKED BY	E. Neupert 8/99

FIELD INVESTIGATION BY: E. Neupert & H. Valencia

STATE OF CALIFORNIA DEPARTMENT OF TRANSPORTATION

DIVISION OF STRUCTURES STRUCTURE DESIGN 1

CU 02
EA 259531

BRIDGE NO. 09-0015
KILOMETER POST 56.8

SPANISH CREEK BRIDGE (RETROFIT)

LOG OF TEST BORINGS 7 OF 10

OSF CIVIL LOG OF TEST BORINGS SHEET (METRIC) (REV. 3/1/99)

ORIGINAL SCALE IN MILLIMETERS FOR REDUCED PLANS 0 10 20 30 40 50 60 70 80 90 100

DISREGARD PRINTS BEARING EARLIER REVISION DATES

REVISION DATES (PRELIMINARY STAGE ONLY) 9-8-99 9-29-99 09-29-09 9-22-09

SHEET OF

FILE => 09-0077-z-ltb18.dgn

USERNAME => trmikesl DATE PLOTTED => 10-NOV-2009 TIME PLOTTED => 07:35

DIST	COUNTY	ROUTE	KILOMETER POST TOTAL PROJECT	SHEET No	TOTAL SHEETS
02	Plu	70			

REGISTERED CIVIL ENGINEER

PLANS APPROVAL DATE

The State of California or its officers or agents shall not be responsible for the accuracy or completeness of electronic copies of this plan sheet.

REGISTERED PROFESSIONAL ENGINEER Mark DeSalvatore No. 39499 Exp. 12-31-01 CIVIL STATE OF CALIFORNIA

DIVISION OF ENGINEERING SERVICES - GEOTECHNICAL SERVICES

This Bridge No. 09-0015 Log of Test Borings sheet is considered an informational document only. As such, the State of California registration seal with signature, license number and registration certificate expiration date confirm that this is a true and accurate copy of the original document. This drawing is available and presented only for the convenience of any bidder, contractor or other interested party.

DIST.	COUNTY	ROUTE	KILOMETER POST-TOTAL PROJECT	Sheet No.	Total Sheets
02	Plu	70	56.5/57.2	140	149

REGISTERED CIVIL ENGINEER — DATE 7-9-09

SPANISH CREEK BRIDGE (REPLACE)

LOG OF TEST BORINGS 19 OF 21

NOTE: A COPY OF THIS LOG OF TEST BORINGS IS AVAILABLE AT OFFICE OF GEOTECHNCIAL SUPPORT, SACRAMENTO, CALIFORNIA

CU: 02 EA: 373101

BRIDGE No. 09-0077

Sheet 53 of 55

Revisions made to this Log of Test Borings from the original 1999 Log of Test Borings are the addition of the following table and notes:

To accompany plans dated 11-2-09

REGISTERED PROFESSIONAL ENGINEER KENNETH G. SORENSEN No. GE 2520 Exp. 9-30-10 CIVIL STATE OF CALIFORNIA

Notes:

1. See the Spanish Creek Bridge General Plan (Bridge No. 09-0015) revision date 12-15-98) for "CL Rte. 70" alignment and stationing.
2. Caltrans Design West, Branch S-7 produced the data presented in the table below. The data are the locations for the Bridge No. 09-0015 Log of Test Borings referenced to the proposed new structure location (per the "A70" alignment). This table is presented on the Bridge No. 09-0015 Log of Test Boring sheets for the convenience of any bidder, contractor or other interested party.

Boring	"A70" LINE Station	Offset from "A-70" Line
99-15	17+12.91	20.12 m Lt

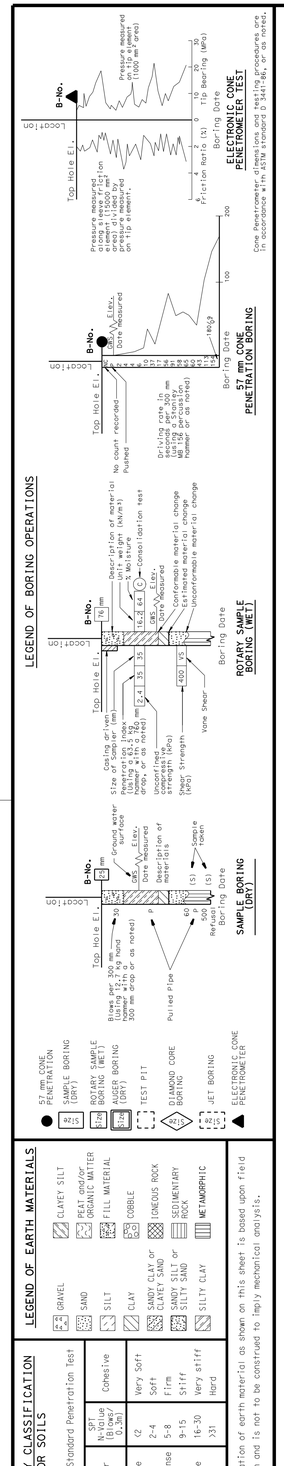

ENGINEERING SERVICE CENTER	STRUCTURE FOUNDATIONS
DRAWN BY	K. Wahl 7/99 & 8/99
CHECKED BY	E. Neupert 8/99

FIELD INVESTIGATION BY: E. Neupert

STATE OF CALIFORNIA DEPARTMENT OF TRANSPORTATION

DIVISION OF STRUCTURES STRUCTURE DESIGN 1

BRIDGE NO. 09-0015 KILOMETER POST 56.8

SPANISH CREEK BRIDGE (RETROFIT)

LOG OF TEST BORINGS 8 OF 10

CU 02 EA 259531

DISREGARD PRINTS BEARING EARLIER REVISION DATES

REVISION DATES (PRELIMINARY STAGE ONLY): 9-15-99 9-29-99 9-22-09

SHEET OF

OSF CIVIL LOG OF TEST BORINGS SHEET (METRIC) (REV. 3/1/99)

ORIGINAL SCALE IN MILLIMETERS FOR REDUCED PLANS 0 10 20 30 40 50 60 70 80 90 100

FILE => 09-0077-z-1tb19.dgn

USERNAME => trmikest DATE PLOTTED => 10-NOV-2009 TIME PLOTTED => 07:35

DIST	COUNTY	ROUTE	KILOMETER POST TOTAL PROJECT	SHEET No	TOTAL SHEETS
02	Plu	70			

REGISTERED CIVIL ENGINEER

PLANS APPROVAL DATE

REGISTERED PROFESSIONAL ENGINEER — Mark DeSalvatore — No. 39499 — Exp. 12-31-01 — CIVIL — STATE OF CALIFORNIA

The State of California or its officers or agents shall not be responsible for the accuracy or completeness of electronic copies of this plan sheet.

DIVISION OF ENGINEERING SERVICES - GEOTECHNICAL SERVICES

This Bridge No. 09-0015 Log of Test Borings sheet is considered an informational document only. As such, the State of California registration seal with signature, license number and registration certificate expiration date confirm that this is a true and accurate copy of the original document. This drawing is available and presented only for the convenience of any bidder, contractor or other interested party.

DIST.	COUNTY	ROUTE	KILOMETER POST-TOTAL PROJECT	Sheet No.	Total Sheets
02	Plu	70	56.5/57.2	141	149

REGISTERED CIVIL ENGINEER — 7-9-09 DATE

REGISTERED PROFESSIONAL ENGINEER — KENNETH G. SORENSEN — No. GE 2520 — Exp. 9-30-10 — CIVIL — STATE OF CALIFORNIA

SPANISH CREEK BRIDGE (REPLACE)

LOG OF TEST BORINGS 20 OF 21

NOTE: A COPY OF THIS LOG OF TEST BORINGS IS AVAILABLE AT OFFICE OF GEOTECHNCIAL SUPPORT, SACRAMENTO, CALIFORNIA

CU: 02
EA: 373101

BRIDGE No. 09-0077

Sheet 54 of 55

Revisions made to this Log of Test Borings from the original 1999 Log of Test Borings are the addition of the following table and notes:

To accompany plans dated 11-2-09

Notes:

1. See the Spanish Creek Bridge General Plan (Bridge No. 09-0015) revision date 12-15-98) for "CL Rte. 70" alignment and stationing.

2. Caltrans Design West, Branch S-7 produced the data presented in the table below. The data are the locations for the Bridge No. 09-0015 Log of Test Borings referenced to the proposed new structure location (per the "A70" alignment). This table is presented on the Bridge No. 09-0015 Log of Test Boring sheets for the convenience of any bidder, contractor or other interested party.

Boring	"A70" LINE Station	Offset from "A-70" Line
99-7	17+16.19	13.58 m Lt
99-7a	17+14.67	17.03 m Lt
99-8	17+15.16	20.69 m Lt
99-8a	17+15.28	17.43 m Lt

FOR PLAN VIEW, SEE
"LOG OF TEST BORINGS" SHEET 1 OF 10

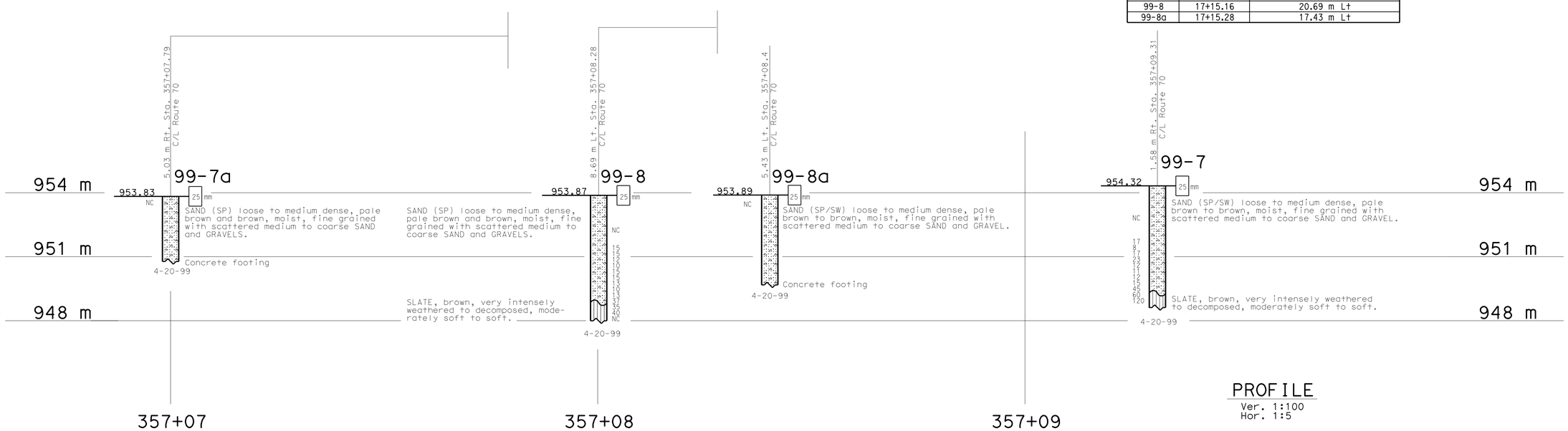

PROFILE
Ver. 1:100
Hor. 1:5

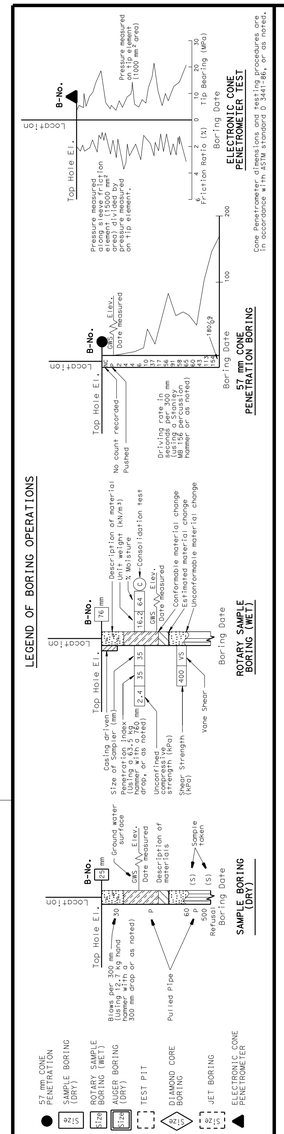

LEGEND OF EARTH MATERIALS

GRAVEL, SAND, SILT, CLAY, CLAYEY SILT, PEAT and/or ORGANIC MATTER, FILL MATERIAL, COBBLE, SANDY CLAY or CLAYEY SAND, SANDY SILT or SILTY SAND, SILTY CLAY, IGNEOUS ROCK, SEDIMENTARY ROCK, METAMORPHIC ROCK

CONSISTENCY CLASSIFICATION FOR SOILS

According to the Standard Penetration Test

SPT N-Value (Blows/0.3m)	Granular	SPT N-Value (Blows/0.3m)	Cohesive
<4	Very Loose	<2	Very Soft
0-4	Loose	2-4	Soft
5-10	Medium Dense	5-8	Firm
11-30	Dense	9-15	Stiff
31-50	Very Dense	16-30	Very stiff
>50		>31	Hard

NOTE: Classification of earth material as shown on this sheet is based upon field inspection and is not to be construed to imply mechanical analysis.

ENGINEERING SERVICE CENTER	STRUCTURE FOUNDATIONS
DRAWN BY	K. Wahl 7/99 & 8/99
CHECKED BY	E. Neupert 8/99

FIELD INVESTIGATION BY: E. Neupert & H. Valencia

STATE OF CALIFORNIA DEPARTMENT OF TRANSPORTATION

DIVISION OF STRUCTURES STRUCTURE DESIGN 1

BRIDGE NO. 09-0015
KILOMETER POST 56.8

SPANISH CREEK BRIDGE (RETROFIT)

LOG OF TEST BORINGS 9 OF 10

OSF CIVIL LOG OF TEST BORINGS SHEET (METRIC) (REV. 3/1/99)

ORIGINAL SCALE IN MILLIMETERS FOR REDUCED PLANS 0 10 20 30 40 50 60 70 80 90 100

CU 02
EA 259531

DISREGARD PRINTS BEARING EARLIER REVISION DATES

REVISION DATES (PRELIMINARY STAGE ONLY) 9-15-99 9-20-99 9-22-09

SHEET OF

FILE => 09-0077-z-1tb20.dgn

USERNAME => trmikesl DATE PLOTTED => 10-NOV-2009 TIME PLOTTED =>

DIST	COUNTY	ROUTE	KILOMETER POST TOTAL PROJECT	SHEET No	TOTAL SHEETS
02	Plu	70			

REGISTERED CIVIL ENGINEER

PLANS APPROVAL DATE

The State of California or its officers or agents shall not be responsible for the accuracy or completeness of electronic copies of this plan sheet.

REGISTERED PROFESSIONAL ENGINEER — Mark DeSalvatore — No. 39499 — Exp. 12-31-01 — CIVIL — STATE OF CALIFORNIA

DIVISION OF ENGINEERING SERVICES - GEOTECHNICAL SERVICES

This Bridge No. 09-0015 Log of Test Borings sheet is considered an informational document only. As such, the State of California registration seal with signature, license number and registration certificate expiration date confirm that this is a true and accurate copy of the original document. This drawing is available and presented only for the convenience of any bidder, contractor or other interested party.

DIST.	COUNTY	ROUTE	KILOMETER POST-TOTAL PROJECT	Sheet No.	Total Sheets
02	Plu	70	56.5/57.2	142	149

REGISTERED CIVIL ENGINEER — DATE 7-9-09

REGISTERED PROFESSIONAL ENGINEER — KENNETH G. SORENSEN — No. GE 2520 — Exp. 9-30-10 — CIVIL — STATE OF CALIFORNIA

SPANISH CREEK BRIDGE (REPLACE)

LOG OF TEST BORINGS 21 OF 21

NOTE: A COPY OF THIS LOG OF TEST BORINGS IS AVAILABLE AT OFFICE OF GEOTECHNICAL SUPPORT, SACRAMENTO, CALIFORNIA

CU: 02
EA: 373101

BRIDGE No. 09-0077

Sheet 55 of 55

Revisions made to this Log of Test Borings from the original 1999 Log of Test Borings are the addition of the following table and notes:

To accompany plans dated 11-2-09

Notes:

1. See the Spanish Creek Bridge General Plan (Bridge No. 09-0015) revision date 12-15-98) for "CL Rte. 70" alignment and stationing.
2. Caltrans Design West, Branch S-7 produced the data presented in the table below. The data are the locations for the Bridge No. 09-0015 Log of Test Borings referenced to the proposed new structure location (per the "A70" alignment). This table is presented on the Bridge No. 09-0015 Log of Test Boring sheets for the convenience of any bidder, contractor or other interested party.

Boring	"A70" LINE Station	Offset from "A-70" Line
99-18	17+53.73	14.13 m Lt
99-19	17+61.56	14.13 m Lt

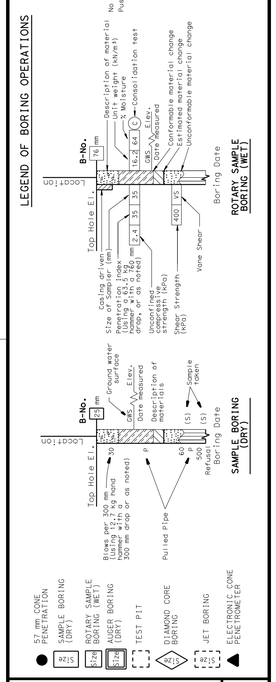

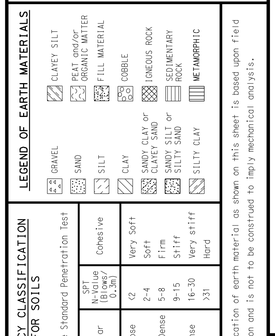

CONSISTENCY CLASSIFICATION FOR SOILS

According to the Standard Penetration Test

SPT N-Value (Blows/0.3m)	Granular	SPT N-Value (Blows/0.3m)	Cohesive
0-4	Very Loose	<2	Very Soft
5-10	Loose	2-4	Soft
11-30	Medium Dense	5-8	Firm
31-50	Dense	9-15	Stiff
>50	Very Dense	16-30	Very stiff
		>31	Hard

NOTE: Classification of earth material as shown on this sheet is based upon field inspection and is not to be construed to imply mechanical analysis.

FOR PLAN VIEW, SEE
"LOG OF TEST BORINGS" SHEET 1 OF 10

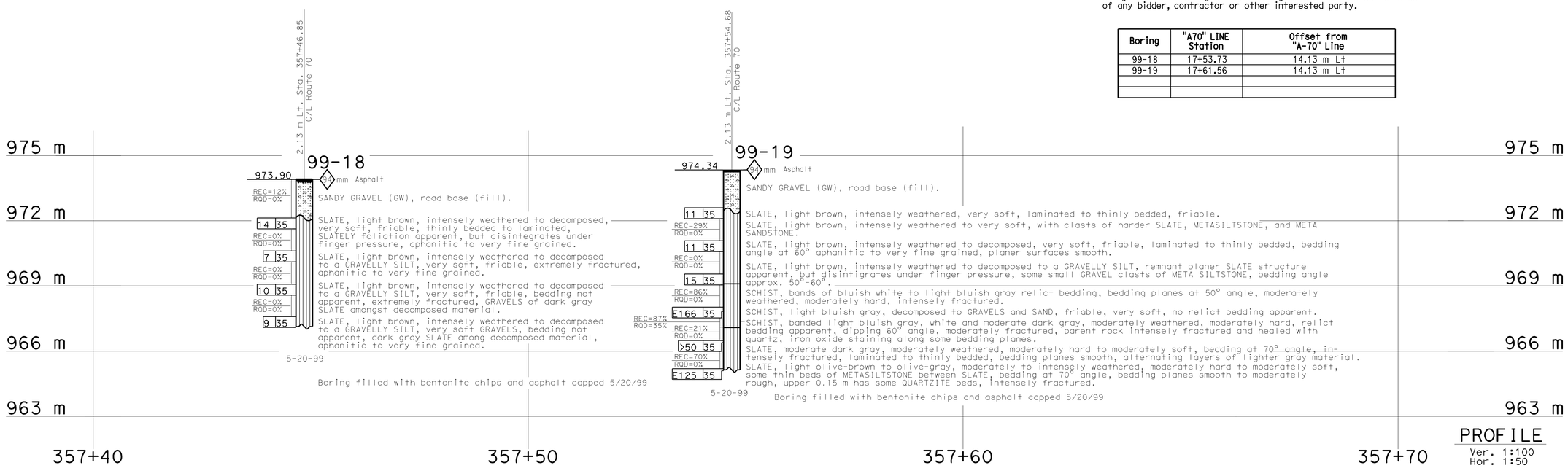

PROFILE
Ver. 1:100
Hor. 1:50

ENGINEERING SERVICE CENTER	STRUCTURE FOUNDATIONS
DRAWN BY K. Wahl 8/99	
CHECKED BY E. Neupert 8/99	

FIELD INVESTIGATION BY: E. Neupert

STATE OF CALIFORNIA
DEPARTMENT OF TRANSPORTATION

DIVISION OF STRUCTURES
STRUCTURE DESIGN 1

CU 02
EA 259531

BRIDGE NO. 09-0015
KILOMETER POST 56.8

SPANISH CREEK BRIDGE (RETROFIT)

LOG OF TEST BORINGS 10 OF 10

ORIGINAL SCALE IN MILLIMETERS FOR REDUCED PLANS 0 10 20 30 40 50 60 70 80 90 100

DISREGARD PRINTS BEARING EARLIER REVISION DATES

REVISION DATES (PRELIMINARY STAGE ONLY) 9-15-99 9-21-99 9-22-09

SHEET OF

OSF CIVIL LOG OF TEST BORINGS SHEET (METRIC) (REV. 3/1/99)

FILE => 09-0077-z-ltb21.dgn

USERNAME => trmikesi DATE PLOTTED => 10-NOV-2009 TIME PLOTTED => 07:36

DIST	COUNTY	ROUTE	KILOMETER POST TOTAL PROJECT	SHEET No	TOTAL SHEETS
02	Plu	70	56.5/57.2	143	149

Eric Watson 10/23/09
REGISTERED CIVIL ENGINEER DATE

11-2-09
PLANS APPROVAL DATE

REGISTERED PROFESSIONAL ENGINEER Eric Watson No. 64273 Exp. 6-30-11 CIVIL STATE OF CALIFORNIA

The State of California or its officers or agents shall not be responsible for the accuracy or completeness of electronic copies of this plan sheet.

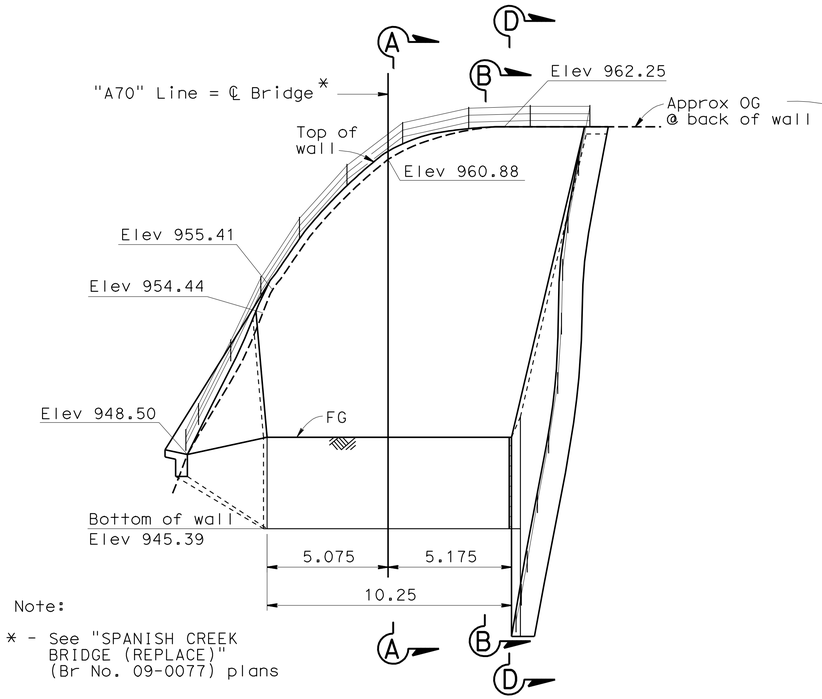

Note:

* - See "SPANISH CREEK BRIDGE (REPLACE)" (Br No. 09-0077) plans

ELEVATION
1:125

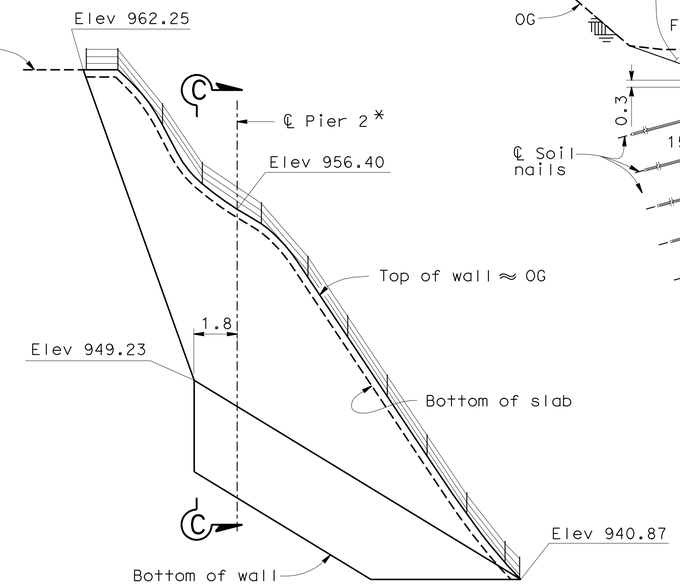

VIEW D-D
1:125

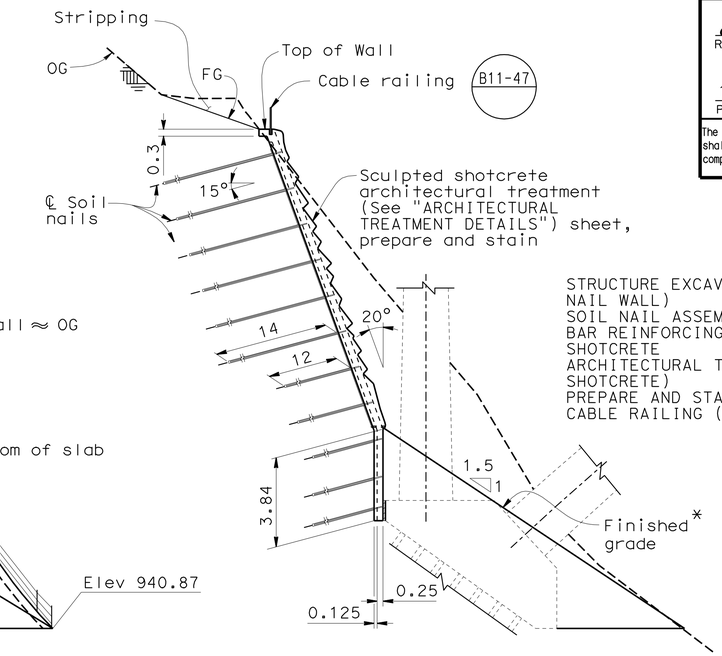

SECTION A-A
1:125

QUANTITIES

STRUCTURE EXCAVATION TYPE D (SOIL NAIL WALL)	680	m3
SOIL NAIL ASSEMBLY	1 890	m
BAR REINFORCING STEEL (RETAINING WALL)	13 300	kg
SHOTCRETE	129	m3
ARCHITECTURAL TREATMENT (SCULPTED SHOTCRETE)	239	m2
PREPARE AND STAIN CONCRETE	239	m2
CABLE RAILING (MODIFIED)	55	m

Note :

"SECTION A-A" shown, "SECTION F-F" similar

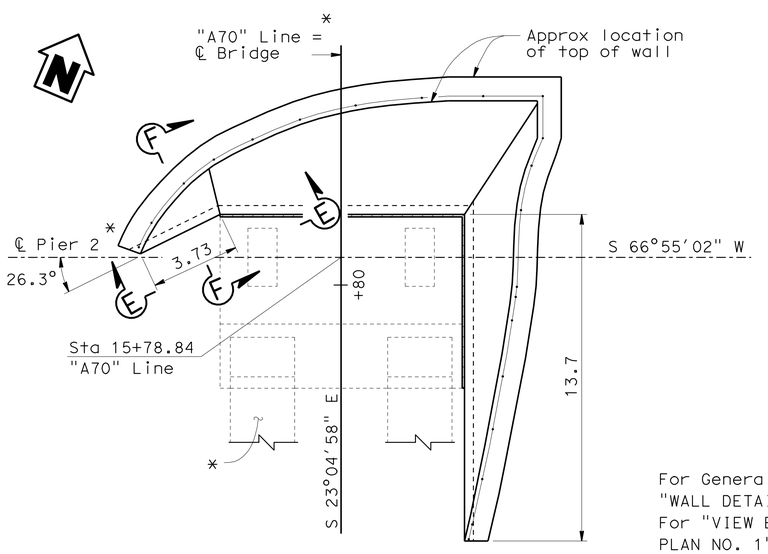

PLAN
1:125

For General Notes, see "WALL DETAILS NO. 1" sheet
For "VIEW E-E" see "STRUCTURE PLAN NO. 1" sheet.

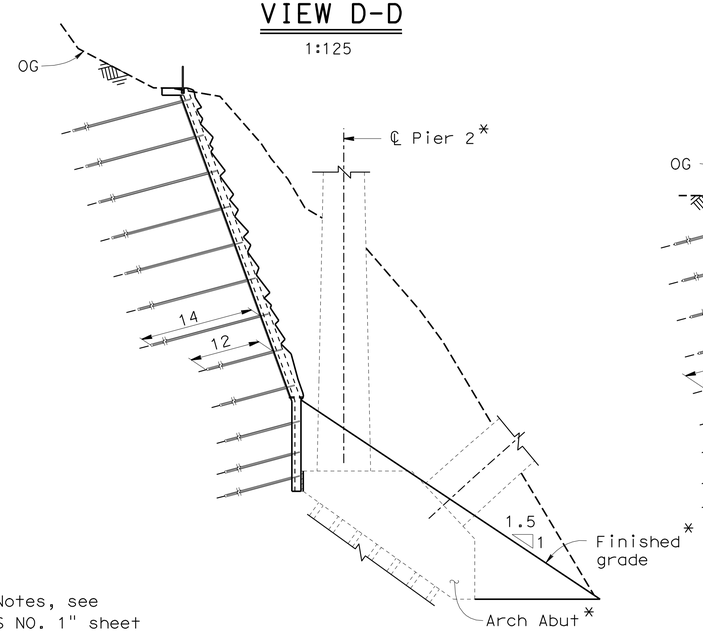

SECTION B-B
1:125

Note :
For details not shown, see "SECTION A-A"

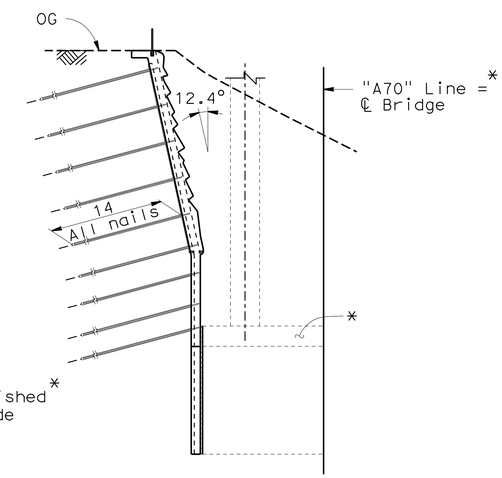

SECTION C-C
1:125

INDEX TO PLANS

SHEET NO.	TITLE
1	GENERAL PLAN
2	STRUCTURE PLAN NO.1
3	STRUCTURE PLAN NO.2
4	TYPICAL SECTION
5	WALL DETAILS NO. 1
6	WALL DETAILS NO. 2
7	ARCHITECTURAL TREATMENT

STANDARD PLANS DATED JULY 2004

B11-47 CABLE RAILING

Standard Plan Sheet Number
Detail Number

Caltrans Metric

Jeff Sims
DESIGN ENGINEER

	BY	CHECKED
DESIGN	April Pearson	Yihwin Huang
DETAILS	Jie Tang	Y. Huang/E. Watson
QUANTITIES	Yihwin Huang	Mark Simonsen

LRFD	LIVE LOADING:		
LAYOUT	BY April Pearson	CHECKED Yihwin Huang	
SPECIFICATIONS	BY Karla Meier	PLANS AND SPECS COMPARED Karla Meier	

STATE OF CALIFORNIA
DEPARTMENT OF TRANSPORTATION

DIVISION OF ENGINEERING SERVICES
STRUCTURE DESIGN
DESIGN BRANCH 1

BRIDGE NO. 09E0001
KILOMETER POST 56.8

SPANISH CREEK SOIL NAIL WALL
GENERAL PLAN

ALL DIMENSIONS ARE IN METERS UNLESS OTHERWISE SHOWN

ORIGINAL SCALE IN MILLIMETERS FOR REDUCED PLANS 0 10 20 30 40 50 60 70 80 90 100

CU 02
EA 373101

DISREGARD PRINTS BEARING EARLIER REVISION DATES

REVISION DATES: 07/22/08 10/22/09 01/23/09 06/18/09 06/24/09 07/15/09 07/16/09 08/25/09 09/24/09

SHEET 1 OF 7

FILE => rw09-0077-a-gp.dgn

STRUCTURES DESIGN GENERAL PLAN SHEET (METRIC) (REV.03-17-04)

USERNAME => trmikesi DATE PLOTTED => 10-NOV-2009 TIME PLOTTED => 07:37

DIST	COUNTY	ROUTE	KILOMETER POST TOTAL PROJECT	SHEET No	TOTAL SHEETS
02	Plu	70	56.5/57.2	144	149

Eric Watson 10-23-09
REGISTERED CIVIL ENGINEER DATE

11-2-09
PLANS APPROVAL DATE

REGISTERED PROFESSIONAL ENGINEER Eric Watson No. 64273 Exp. 6-30-11 CIVIL STATE OF CALIFORNIA

The State of California or its officers or agents shall not be responsible for the accuracy or completeness of electronic copies of this plan sheet.

Notes:
1. Weep holes not shown.
2. Cable railing not shown for clarity.

-●- -Indicates soil nail (14 m long)

-⊙- -Indicates soil nail (12 m long)

⊠ -Indicates location of pullout test nail. Exact location to be determined by the engineer.

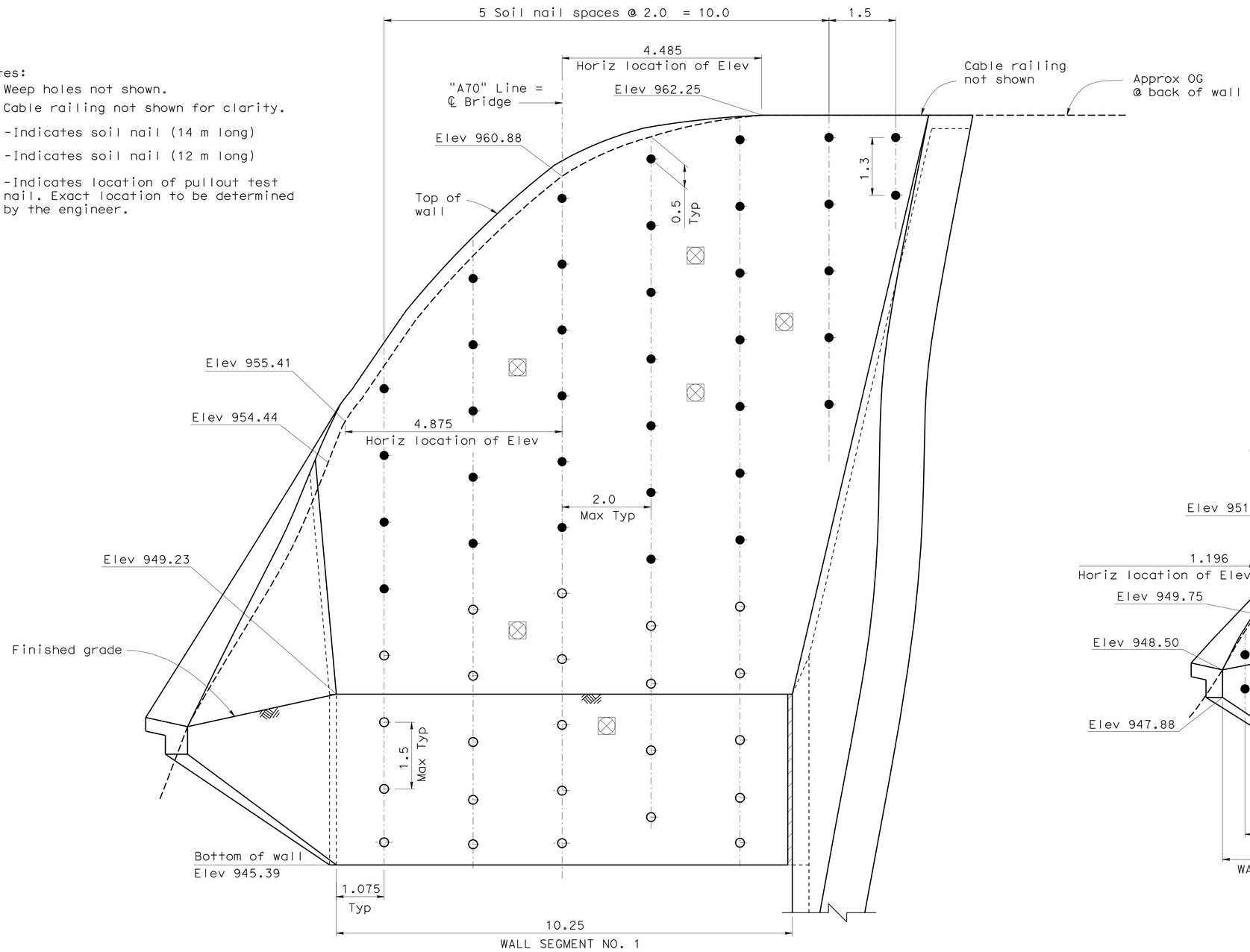

ELEVATION
1:50

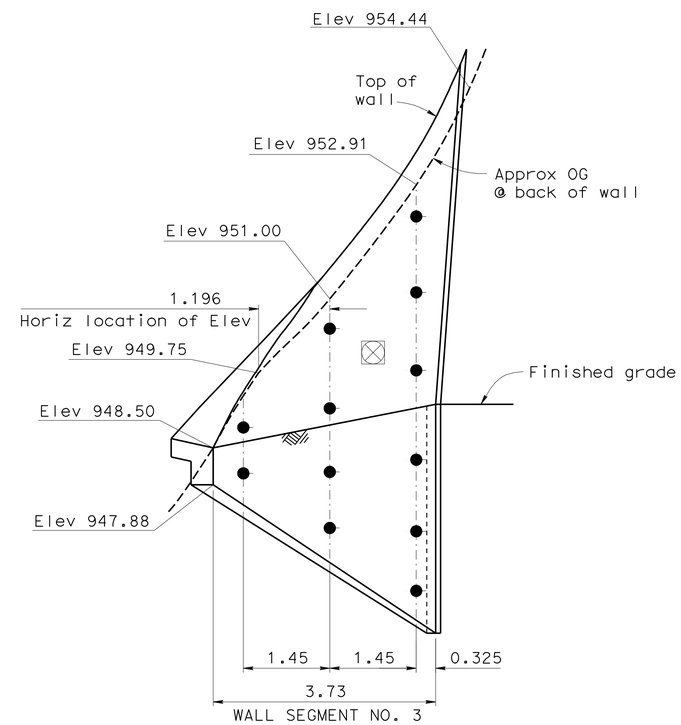

VIEW E-E
1:50

DESIGN	BY April Pearson	CHECKED Yihwin Huang	
DETAILS	BY Jie Tang	CHECKED Y. Huang/E. Watson	
QUANTITIES	BY Yihwin Huang	CHECKED Mark Simonsen	

STATE OF CALIFORNIA
DEPARTMENT OF TRANSPORTATION

DIVISION OF ENGINEERING SERVICES
STRUCTURE DESIGN
DESIGN BRANCH 1

BRIDGE NO. 09E0001
KILOMETER POST 56.8

SPANISH CREEK SOIL NAIL WALL
STRUCTURE PLAN NO. 1

ALL DIMENSIONS ARE IN METERS UNLESS OTHERWISE SHOWN

ORIGINAL SCALE IN MILLIMETERS FOR REDUCED PLANS 0 10 20 30 40 50 60 70 80 90 100

CU 02
EA 373101

DISREGARD PRINTS BEARING EARLIER REVISION DATES

REVISION DATES: 01/23/08 10/22/08 12/08/08 01/23/09 06/18/09 06/24/09 07/14/09 08/26/09 09/24/09

SHEET 2 OF 7

FILE => rw09-0077-c-sp01.dgn

STRUCTURES DESIGN DETAIL SHEET (METRIC) (REV.03-17-04)

USERNAME => trmikesl DATE PLOTTED => 10-NOV-2009 TIME PLOTTED => 07:37

DIST	COUNTY	ROUTE	KILOMETER POST TOTAL PROJECT	SHEET No	TOTAL SHEETS
02	Plu	70	56.5/57.2	145	149

Eric Watson 10/23/09
REGISTERED CIVIL ENGINEER DATE

11-2-09
PLANS APPROVAL DATE

REGISTERED PROFESSIONAL ENGINEER
Eric Watson
No. 64273
Exp. 6-30-11
CIVIL
STATE OF CALIFORNIA

The State of California or its officers or agents shall not be responsible for the accuracy or completeness of electronic copies of this plan sheet.

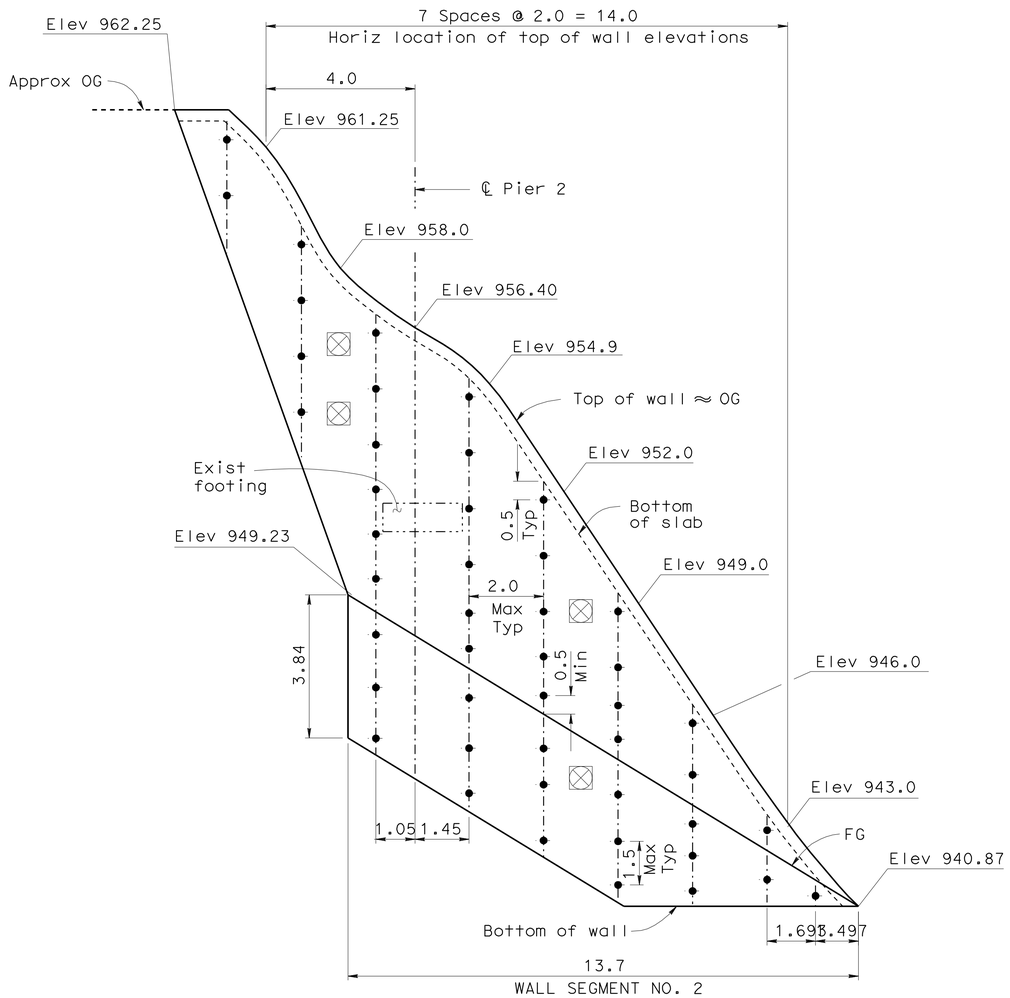

ELEVATION

1:80

Notes:

1. Exact location for weep holes shown to be determined by the engineer.
2. Cable railing not shown for clarity.
3. Location and/or direction of nails may be adjusted as aproved by engineer.

-●- -Indicates soil nails (14 m long)

⊠ -Indicates location of pullout test nail. Exact location to be determined by the engineer.

Caltrans Metric

	BY	CHECKED
DESIGN	April Pearson	Yihwin Huang
DETAILS	Jie Tang	Y. Huang/E. Watson
QUANTITIES	Yihwin Huang	Mark Simonsen

STATE OF CALIFORNIA
DEPARTMENT OF TRANSPORTATION

DIVISION OF ENGINEERING SERVICES
STRUCTURE DESIGN
DESIGN BRANCH 1

BRIDGE NO. 09E0001
KILOMETER POST 56.8

SPANISH CREEK SOIL NAIL WALL
STRUCTURE PLAN NO. 2

ALL DIMENSIONS ARE IN METERS UNLESS OTHERWISE SHOWN

ORIGINAL SCALE IN MILLIMETERS FOR REDUCED PLANS 0 10 20 30 40 50 60 70 80 90 100

CU 02
EA 373101

DISREGARD PRINTS BEARING EARLIER REVISION DATES

REVISION DATES: 08/11/08 11/21/08 12/09/08 01/23/09 06/18/09 07/14/09 08/26/09 09/25/09 10/23/09

SHEET 3 OF 7

FILE => rw09-0077-c-sp02.dgn

STRUCTURES DESIGN DETAIL SHEET (METRIC) (REV.03-17-04)

USERNAME => rrmikest DATE PLOTTED => 10-NOV-2009 TIME PLOTTED => 07:37

DIST	COUNTY	ROUTE	KILOMETER POST TOTAL PROJECT	SHEET No	TOTAL SHEETS
02	Plu	70	56.5/57.2	146	149

Eric Watson 10/23/09
REGISTERED CIVIL ENGINEER DATE

11-2-09
PLANS APPROVAL DATE

REGISTERED PROFESSIONAL ENGINEER Eric Watson No. 64273 Exp. 6-30-11 CIVIL STATE OF CALIFORNIA

The State of California or its officers or agents shall not be responsible for the accuracy or completeness of electronic copies of this plan sheet.

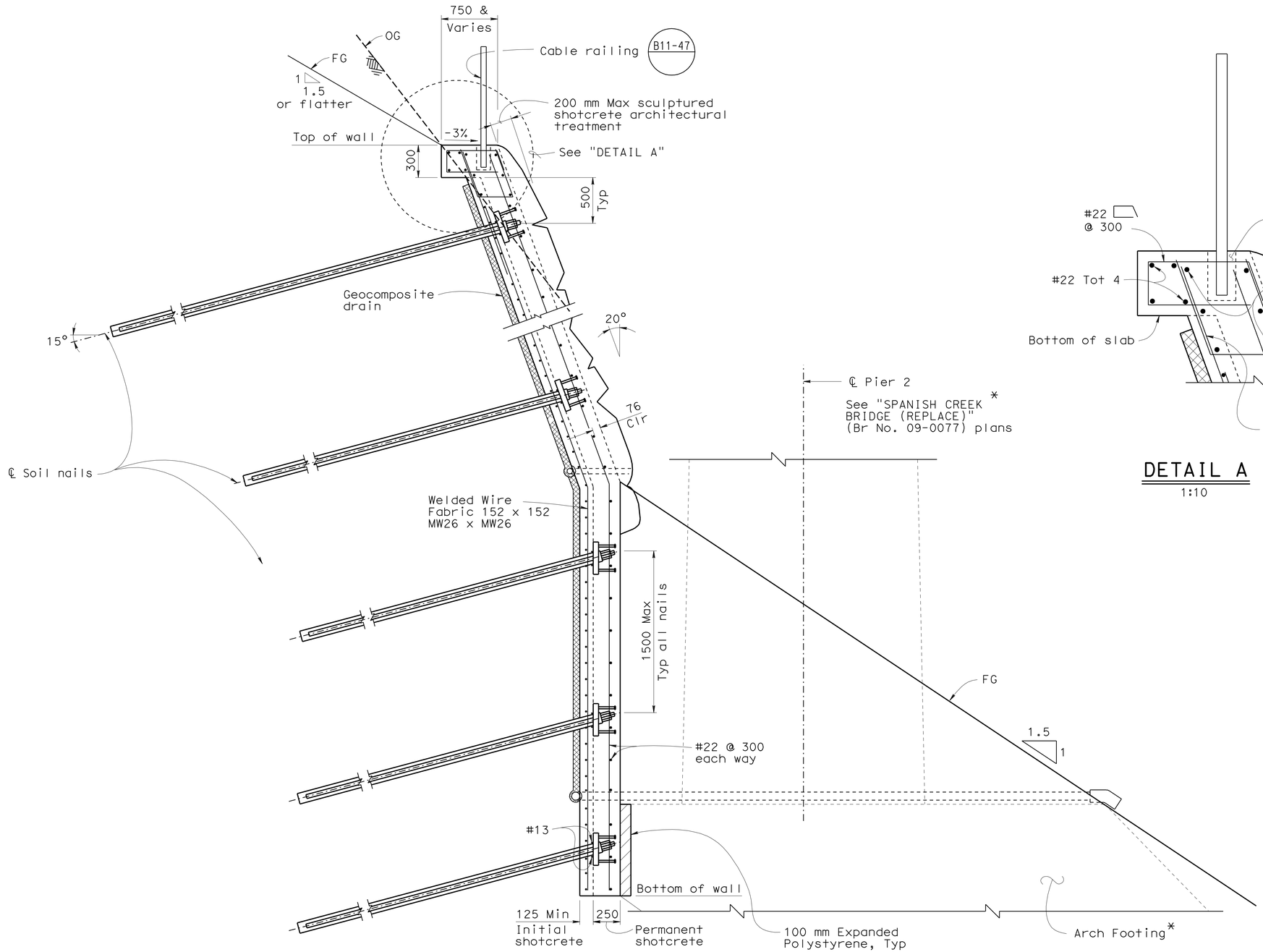

TYPICAL SECTION
1:20

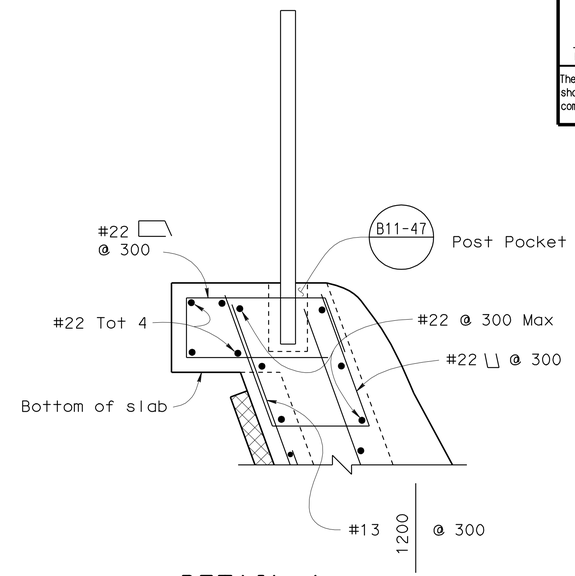

DETAIL A
1:10

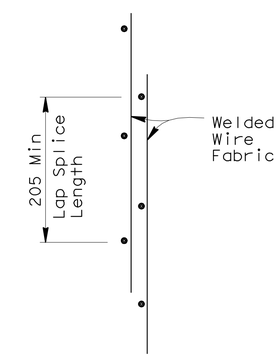

LAP SPLICE DETAIL
NO SCALE

DESIGN	BY April Pearson	CHECKED Yihwin Huang	
DETAILS	BY Jie Tang	CHECKED Y. Huang/E. Watson	
QUANTITIES	BY Yihwin Huang	CHECKED Mark Simonsen	

STATE OF CALIFORNIA
DEPARTMENT OF TRANSPORTATION

DIVISION OF ENGINEERING SERVICES
STRUCTURE DESIGN
DESIGN BRANCH 1

BRIDGE NO. 09E0001
KILOMETER POST 56.8

SPANISH CREEK SOIL NAIL WALL
TYPICAL SECTION

ALL DIMENSIONS ARE IN MILLIMETERS UNLESS OTHERWISE SHOWN

ORIGINAL SCALE IN MILLIMETERS FOR REDUCED PLANS 0 10 20 30 40 50 60 70 80 90 100

CU 02
EA 373101

DISREGARD PRINTS BEARING EARLIER REVISION DATES → 07/24/08

REVISION DATES: 11/26/08 01/23/09 06/18/09 07/15/09 07/14/09 08/21/09 09/25/08 10/23/09

SHEET 4 OF 7

FILE => rw09-0077-k-ts01.dgn

STRUCTURES DESIGN DETAIL SHEET (METRIC) (REV.03-17-04)

USERNAME => trmikest DATE PLOTTED => 10-NOV-2009 TIME PLOTTED => 07:37

DIST	COUNTY	ROUTE	KILOMETER POST TOTAL PROJECT	SHEET No	TOTAL SHEETS
02	Plu	70	56.5/57.2	147	149

Eric Watson 10/23/09
REGISTERED CIVIL ENGINEER DATE

11-2-09
PLANS APPROVAL DATE

REGISTERED PROFESSIONAL ENGINEER
Eric Watson
No. 64273
Exp. 6-30-11
CIVIL
STATE OF CALIFORNIA

The State of California or its officers or agents shall not be responsible for the accuracy or completeness of electronic copies of this plan sheet.

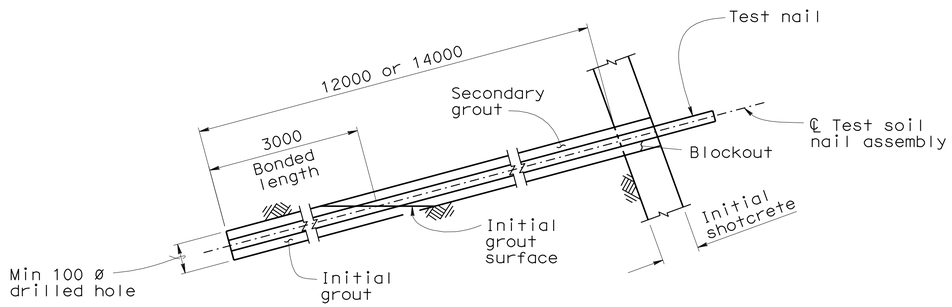

Note: Total length of assembly equals embedment length plus length required for jacking equipment.

TEST SOIL NAIL ASSEMBLY DETAIL

1:10

GENERAL NOTES
LOAD FACTOR DESIGN

DESIGN:	Caltrans Bridge Specifications, April 2000 (LFD) (1996 AASHTO with interims and revisions by Caltrans)
SOIL PARAMETERS:	(for determination of design lateral earth pressures) ø = 22°, c = 69 kPa, γ = 25 kN/m^3
DESIGN PULLOUT RESISTANCE	Q_d = 21KN/m
REINFORCED CONCRETE:	fy = 420 MPa, f′c = 25 MPa, n = 8
SOIL NAIL:	fy = 420 MPa
STRUCTURAL STEEL:	fy = 250 MPa

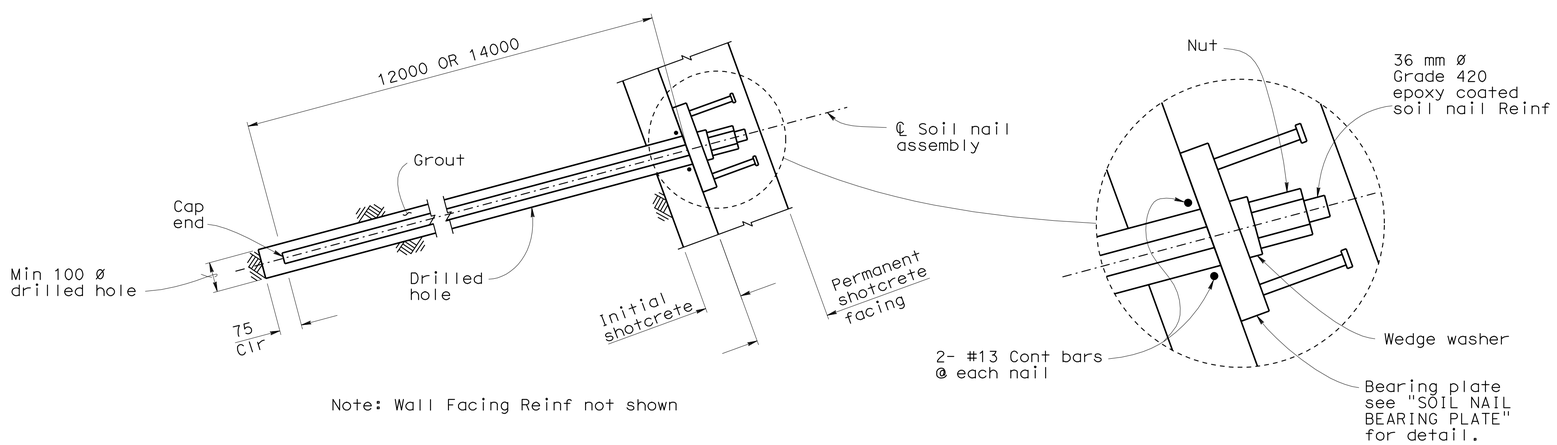

Note: Wall Facing Reinf not shown

SOIL NAIL ASSEMBLY DETAIL

1:10

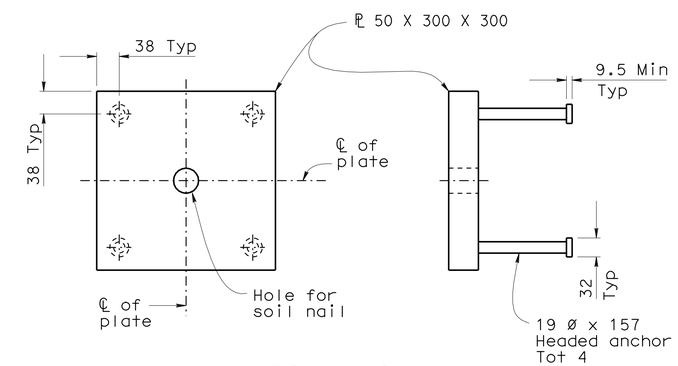

SOIL NAIL BEARING PLATE

1:5

DESIGN	BY April Pearson	CHECKED Yihwin Huang	
DETAILS	BY Jie Tang	CHECKED Y. Huang/E. Watson	
QUANTITIES	BY Yihwin Huang	CHECKED Mark Simonsen	

STATE OF CALIFORNIA
DEPARTMENT OF TRANSPORTATION

DIVISION OF ENGINEERING SERVICES
STRUCTURE DESIGN
DESIGN BRANCH 1

BRIDGE NO. 09E0001
KILOMETER POST 56.8

SPANISH CREEK SOIL NAIL WALL
WALL DETAILS NO. 1

ALL DIMENSIONS ARE IN MILLIMETERS UNLESS OTHERWISE SHOWN

ORIGINAL SCALE IN MILLIMETERS FOR REDUCED PLANS 0 10 20 30 40 50 60 70 80 90 100

CU 02
EA 373101

DISREGARD PRINTS BEARING EARLIER REVISION DATES

REVISION DATES: 07/24/08 08/06/08 11/25/08 12/09/08 01/23/09 06/18/09 07/15/09 08/26/09

SHEET 5 OF 7

FILE => rw09-0077-q-rwdt01.dgn

STRUCTURES DESIGN DETAIL SHEET (METRIC) (REV.03-17-04)

USERNAME => trmikes1 DATE PLOTTED => 10-NOV-2009 TIME PLOTTED => 07:37

DIST	COUNTY	ROUTE	KILOMETER POST TOTAL PROJECT	SHEET No	TOTAL SHEETS
02	Plu	70	56.5/57.2	148	149

Eric Watson 10/23/09
REGISTERED CIVIL ENGINEER DATE

11-2-09
PLANS APPROVAL DATE

REGISTERED PROFESSIONAL ENGINEER Eric Watson No. 64273 Exp. 6-30-11 CIVIL STATE OF CALIFORNIA

The State of California or its officers or agents shall not be responsible for the accuracy or completeness of electronic copies of this plan sheet.

Legend:

- Indicates structure excavation (Soil Nail Wall)
- Indicates structure excavation Type D (Soil Nail Wall)
- Indicates structure backfill to be placed after bridge construction is completed. *

** - See "SPANISH CREEK BRIDGE (PEPLACE)" (Br No. 09-0077) plans.

\+ - Denotes ℄ soil nail or tieback assembly

S_H - Denotes horizontal spacing of soil nail or tieback. See "STRUCTURE PLAN" sheet.

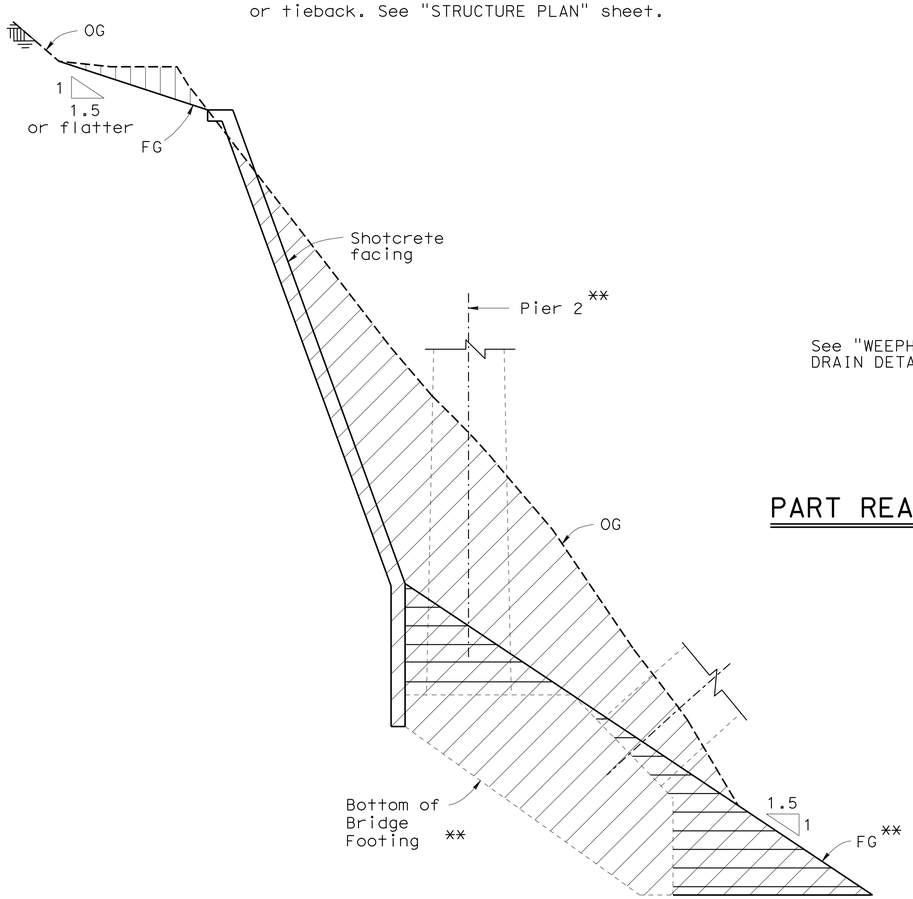

LIMITS OF PAYMENT - EXCAVATION & BACKFILL

1:80

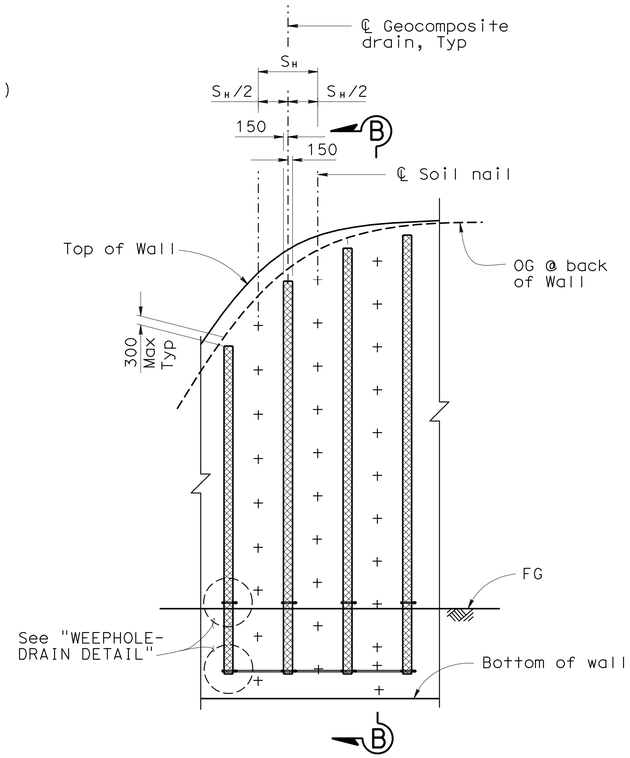

PART REAR ELEVATION GEOCOMPOSITE DRAIN

1:100

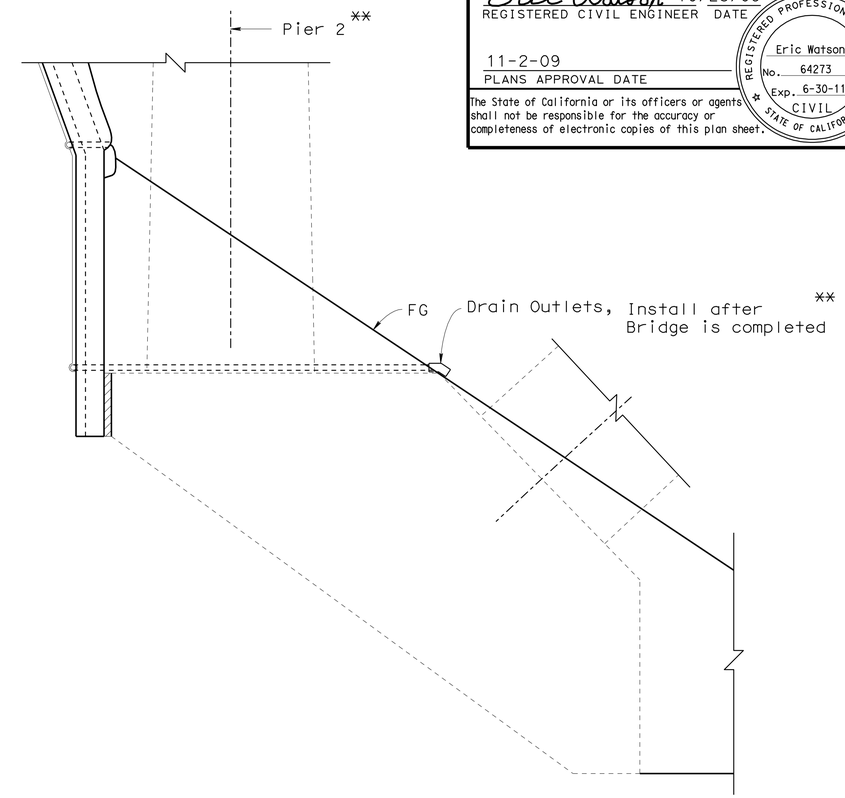

SECTION B-B

1:40

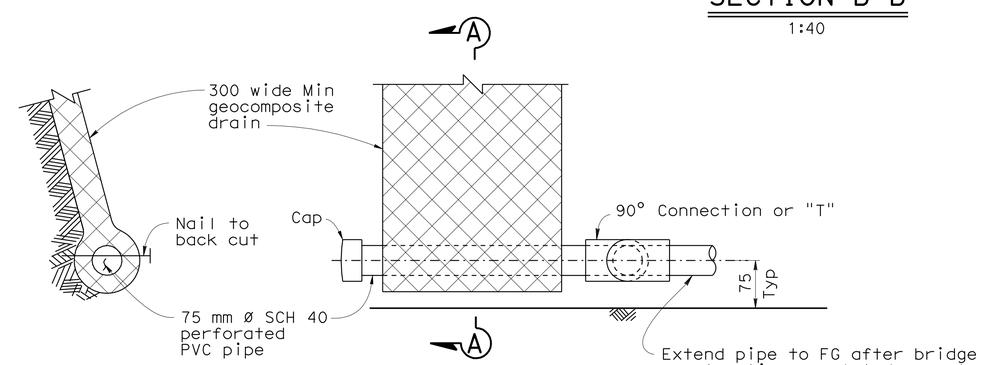

SECTION A-A ELEVATION

WEEPHOLE - DRAIN DETAIL

NO SCALE

DESIGN	BY April Pearson	CHECKED Yihwin Huang	
DETAILS	BY Jie Tang	CHECKED Y. Huang/E. Watson	
QUANTITIES	BY Yihwin Huang	CHECKED Mark Simonsen	

STATE OF CALIFORNIA
DEPARTMENT OF TRANSPORTATION

DIVISION OF ENGINEERING SERVICES
STRUCTURE DESIGN
DESIGN BRANCH 1

CU 02
EA 373101

BRIDGE NO. 09E0001
KILOMETER POST 56.8

SPANISH CREEK SOIL NAIL WALL
WALL DETAILS NO.2

ALL DIMENSIONS ARE IN MILLIMETERS UNLESS OTHERWISE SHOWN

ORIGINAL SCALE IN MILLIMETERS FOR REDUCED PLANS 0 10 20 30 40 50 60 70 80 90 100

DISREGARD PRINTS BEARING EARLIER REVISION DATES

REVISION DATES: 07/26/08 08/06/08 11/25/08 01/23/09 06/18/09 07/14/09 07/16/09 08/21/09 09/25/09 10/23/09

SHEET 6 OF 7

FILE => rw09-0077-q-rwdt02.dgn

STRUCTURES DESIGN DETAIL SHEET (METRIC) (REV.03-17-04)

USERNAME => trmikesi DATE PLOTTED => 10-NOV-2009 TIME PLOTTED => 07:38

DIST	COUNTY	ROUTE	KILOMETER POST TOTAL PROJECT	SHEET No	TOTAL SHEETS
02	Plu	70	56.5/57.2	149	149

Eric Watson 10/23/09
REGISTERED CIVIL ENGINEER DATE

11-2-09
PLANS APPROVAL DATE

REGISTERED PROFESSIONAL ENGINEER Eric Watson No. 64273 Exp. 6-30-11 CIVIL STATE OF CALIFORNIA

The State of California or its officers or agents shall not be responsible for the accuracy or completeness of electronic copies of this plan sheet.

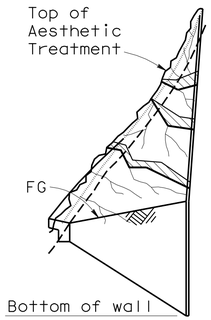

PART DEVELOPED ELEVATION
1:100

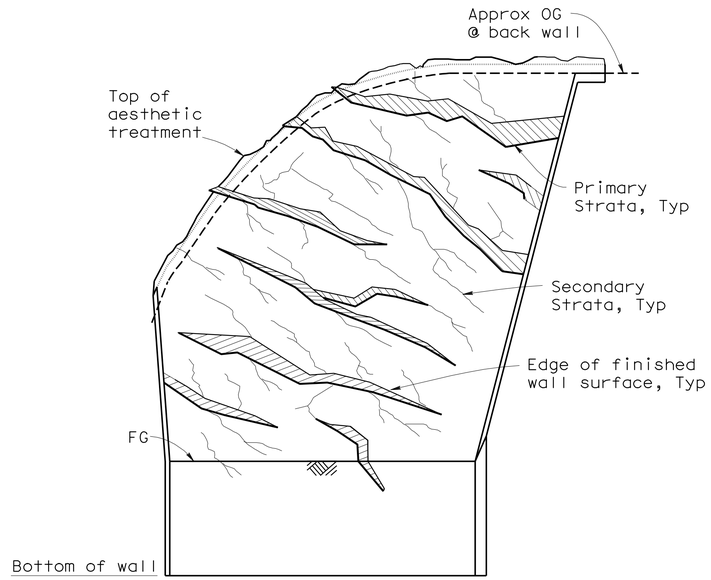

PART DEVELOPED ELEVATION
1:100

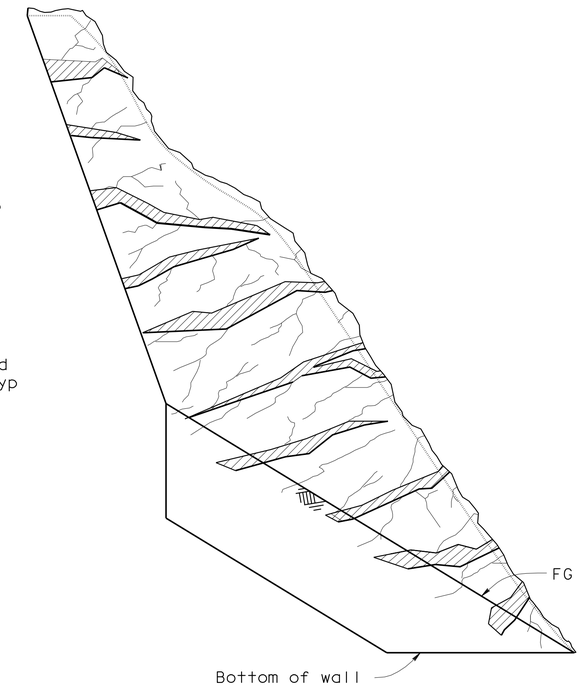

PART DEVELOPED ELEVATION
1:100

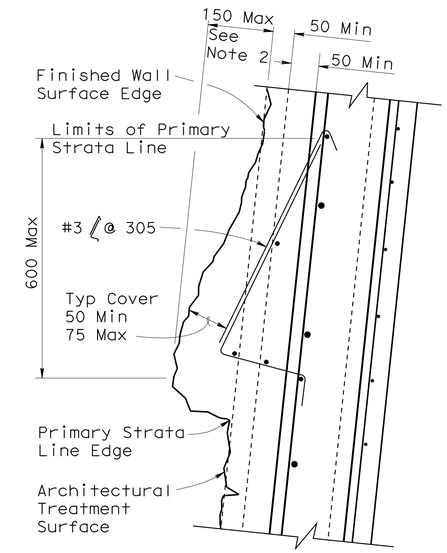

CROSS SECTION
PRIMARY STRATA LINE
NO SCALE

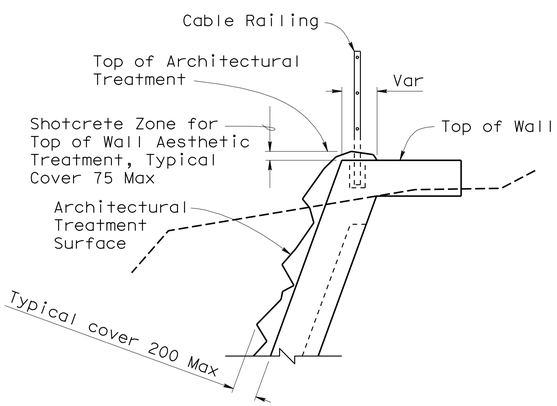

CROSS SECTION AT TOP OF WALL
NO SCALE

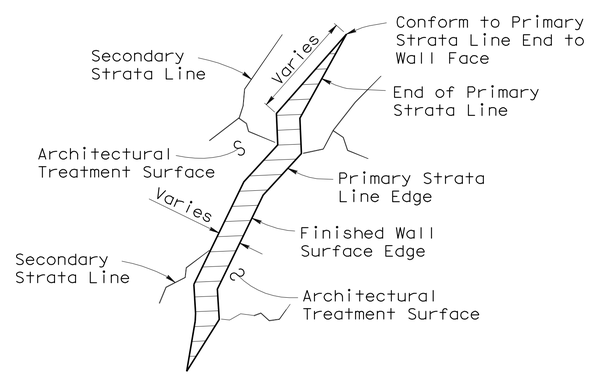

ELEVATION OF PRIMARY STRATA LINE DETAIL
NO SCALE

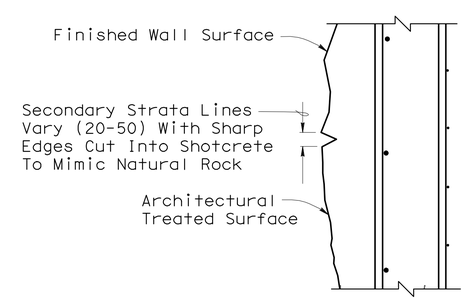

SECTION OF SECONDARY STRATA LINE
NO SCALE

Note:
All sculpted shotcrete surfaces are to be prepared and stained.

Caltrans Metric

	BY	CHECKED
DESIGN	April Pearson	Yihwin Huang
DETAILS	Jie Tang	Y. Huang/E. Watson
QUANTITIES	Yihwin Huang	Mark Simonsen

STATE OF CALIFORNIA
DEPARTMENT OF TRANSPORTATION

DIVISION OF ENGINEERING SERVICES
STRUCTURE DESIGN
DESIGN BRANCH 1

BRIDGE NO. 09E0001
KILOMETER POST 56.8

SPANISH CREEK SOIL NAIL WALL
ARCHITECTURAL TREATMENT

ALL DIMENSIONS ARE IN MILLIMETERS UNLESS OTHERWISE SHOWN

ORIGINAL SCALE IN MILLIMETERS FOR REDUCED PLANS 0 10 20 30 40 50 60 70 80 90 100

CU 02
EA 373101

DISREGARD PRINTS BEARING EARLIER REVISION DATES

REVISION DATES: 12/09/08 01/23/09 01/26/09 06/18/09 07/14/09 07/16/09 08/26/09 09/25/09

SHEET 7 OF 7

FILE => rw09-0077-u-archtrt-new.dgn

STRUCTURES DESIGN DETAIL SHEET (METRIC) (REV.03-17-04)

USERNAME => trmikesl DATE PLOTTED => 10-NOV-2009 TIME PLOTTED => 07:38