Dist	COUNTY	ROUTE	POST MILES TOTAL PROJECT	SHEET No.	TOTAL SHEETS
02	Tri	36	R9.2/15.8	1	25

INDEX OF PLANS

SHEET No.	DESCRIPTION
1	TITLE AND LOCATION MAP
2	TYPICAL CROSS SECTIONS
3-10	CONSTRUCTION DETAILS
11	CONSTRUCTION AREA SIGNS
12	PAVEMENT DELINEATION DETAILS AND QUANTITIES
13-15	SUMMARY OF QUANTITIES
16-25	REVISED STANDARD PLANS

THE STANDARD PLANS LIST APPLICABLE TO THIS CONTRACT IS INCLUDED IN THE NOTICE TO BIDDERS AND SPECIAL PROVISIONS BOOK.

STATE OF CALIFORNIA

DEPARTMENT OF TRANSPORTATION

PROJECT PLANS FOR CONSTRUCTION ON

STATE HIGHWAY

IN TRINITY COUNTY NEAR FOREST GLEN FROM 0.2 MILE WEST OF SOUTH FORK MOUNTAIN ROAD TO 0.9 MILE WEST OF GLEN CREEK ROAD

TO BE SUPPLEMENTED BY STANDARD PLANS DATED 2010

LOCATION MAP

NO SCALE

THE CONTRACTOR SHALL POSSESS THE CLASS (OR CLASSES) OF LICENSE AS SPECIFIED IN THE "NOTICE TO BIDDERS."

Scott C. Gregory 11-30-15
PROJECT ENGINEER DATE
REGISTERED CIVIL ENGINEER

NOVEMBER 30, 2015
PLANS APPROVAL DATE

THE STATE OF CALIFORNIA OR ITS OFFICERS OR AGENTS SHALL NOT BE RESPONSIBLE FOR THE ACCURACY OR COMPLETENESS OF SCANNED COPIES OF THIS PLAN SHEET.

REGISTERED PROFESSIONAL ENGINEER SCOTT C. GREGORY No. C75565 Exp. 6-30-16 CIVIL STATE OF CALIFORNIA

CONTRACT No.	02-1H0204
PROJECT ID	0215000087

LAST REVISION 11-30-15

DATE PLOTTED => 09-FEB-2016
TIME PLOTTED => 16:03

PROJECT MANAGER MICHAEL CONNER
DESIGN ENGINEER MICHAEL CONNER

P:\proj3\02\1h020_plans\pse\21h020ab001.dgn

Dist	COUNTY	ROUTE	POST MILES TOTAL PROJECT	SHEET No.	TOTAL SHEETS
02	Tri	36	R9.2/15.8	2	25

Scott C. Gregory 11-30-15
REGISTERED CIVIL ENGINEER DATE

11-30-15
PLANS APPROVAL DATE

REGISTERED PROFESSIONAL ENGINEER SCOTT C. GREGORY No. C75565 Exp. 06-30-16 CIVIL STATE OF CALIFORNIA

THE STATE OF CALIFORNIA OR ITS OFFICERS OR AGENTS SHALL NOT BE RESPONSIBLE FOR THE ACCURACY OR COMPLETENESS OF SCANNED COPIES OF THIS PLAN SHEET.

NOTES:

1. DIMENSIONS OF THE PAVEMENT STRUCTURES (STRUCTURAL SECTIONS) ARE SUBJECT TO TOLERANCES SPECIFIED IN THE STANDARD SPECIFICATIONS.
2. FOR ACCURATE RIGHT OF WAY DATA, CONTACT R/W ENGINEERING AT THE DISTRICT OFFICE.
3. GRADE TO DRAIN AWAY FROM ROADWAY.
4. WHERE SHOULDER WIDTH IS LESS THAN 3′, PLACE SHOULDER BACKING TO HP.
5. EXISTING UTILITY FACILITIES HAVE NOT BEEN INCLUDED IN THESE PLANS. LOCATIONS OF WORK ARE FLEXIBLE AND MAY BE ADJUSTED TO MITIGATE ANY CONFLICTS WITH EXISTING UTILITY FACILITIES.

PAVEMENT CLIMATE ZONE:

LOW MOUNTAIN

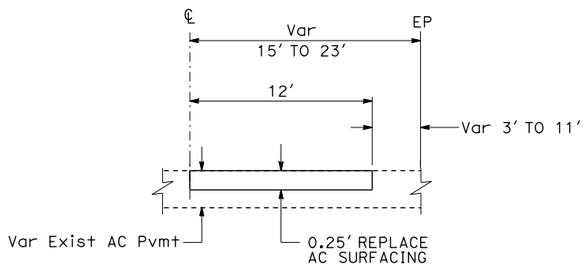

REPLACE AC SURFACING
(TYPICAL BOTH DIRECTIONS)
PM 10.50 TO 11.50

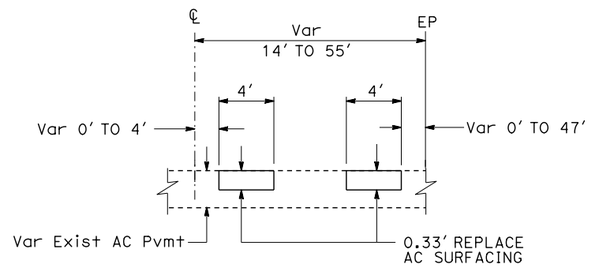

REPLACE AC SURFACING
(TYPICAL BOTH DIRECTIONS)
PM R9.21 TO 10.50
PM 11.50 TO 15.80

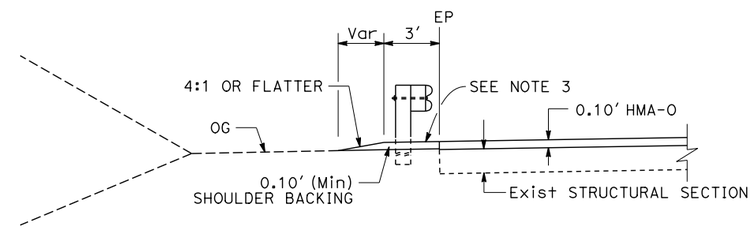

SHOULDER BACKING LOCATIONS
WITH OR WITHOUT GUARDRAIL
WITH OR WITHOUT DIKE
(TYPICAL BOTH DIRECTIONS)

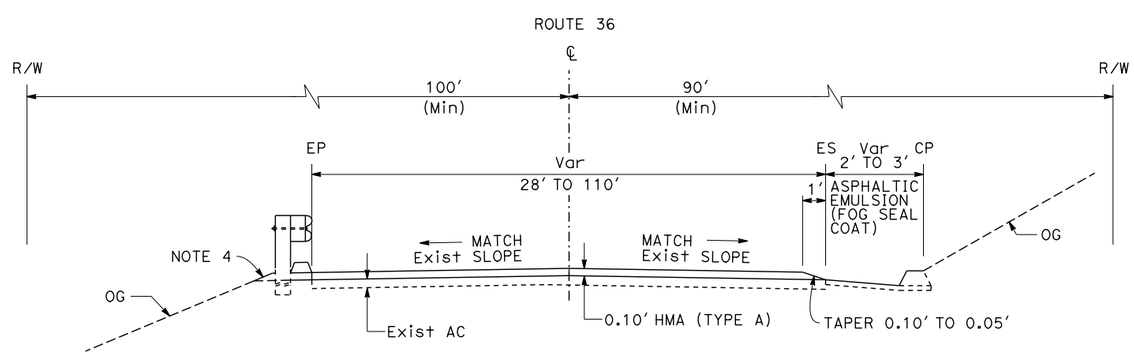

TYPICAL CROSS SECTION
PM R9.21 TO 15.80

TYPICAL CROSS SECTIONS
NO SCALE

X-1

REVISED BY	DATE REVISED
SCOTT GREGORY	KARLIE SMITH

CALCULATED-DESIGNED BY	CHECKED BY

FUNCTIONAL SUPERVISOR: MICHAEL CONNER

STATE OF CALIFORNIA - DEPARTMENT OF TRANSPORTATION
Caltrans® MAINTENANCE

\\st02cadam02\cadd\proj3\02\1h020_plans\pse\21h020ca001.dgn

LAST REVISION 11-30-15
DATE PLOTTED => 09-FEB-2016
TIME PLOTTED => 16:03

Dist	COUNTY	ROUTE	POST MILES TOTAL PROJECT	SHEET No.	TOTAL SHEETS
02	Tri	36	R9.2/15.8	3	25

Scott C. Gregory 11-30-15
REGISTERED CIVIL ENGINEER DATE

11-30-15
PLANS APPROVAL DATE

REGISTERED PROFESSIONAL ENGINEER SCOTT C. GREGORY No. C75565 Exp. 06-30-16 CIVIL STATE OF CALIFORNIA

THE STATE OF CALIFORNIA OR ITS OFFICERS OR AGENTS SHALL NOT BE RESPONSIBLE FOR THE ACCURACY OR COMPLETENESS OF SCANNED COPIES OF THIS PLAN SHEET.

NOTE:

1. EXISTING UTILITY FACILITIES HAVE NOT BEEN INCLUDED IN THESE PLANS. LOCATIONS OF WORK ARE FLEXIBLE AND MAY BE ADJUSTED TO MITIGATE ANY CONFLICTS WITH EXISTING UTILITY FACILITIES.

LEGEND:

COLD PLANE ASPHALT CONCRETE PAVEMENT (0.00' TO 0.10')

ROAD CONNECTIONS

ROAD CONNECTION	SIDE	POST MILE	DIMENSIONS (LF)			CASE
			A	B	C	
S. FORK Mt Rd	L+	10.11	160	80	24	A
HORSE RIDGE LOOKOUT	R+	10.12	110	33	48	A
ROAD CONNECTION	L+	10.86	135	12	33	B
FOREST SERVICE Rd 1S11	R+	11.09	210	45	40	A
ROAD CONNECTION	L+	11.13	163	32	28	B
FOREST SERVICE Rd 1S02	L+	12.57	300	44	29	A
ROAD CONNECTION	R+	13.24	97	12	28	B
ROAD CONNECTION	R+	13.44	165	18	28	B
FOREST SERVICE Rd 1S06	R+	13.80	300	35	49	A
ROAD CONNECTION	R+	14.12	90	23	26	B
FOREST SERVICE Rd 1S01	L+	14.35	300	65	25	A

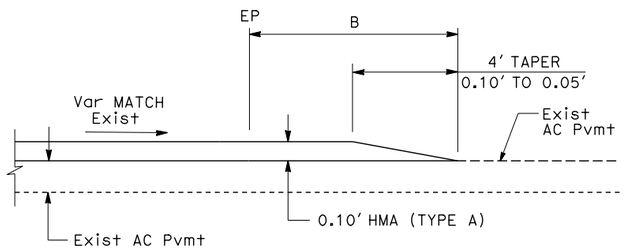

CASE B
SECTION A-A

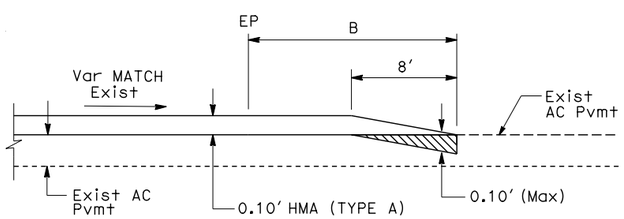

CASE A
SECTION A-A

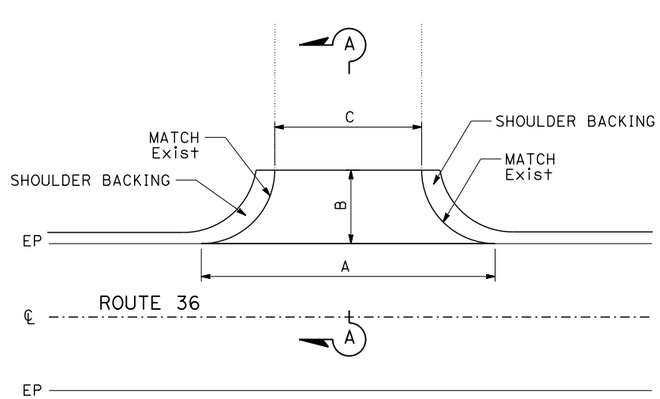

TYPICAL PAVED ROAD CONNECTIONS DETAIL

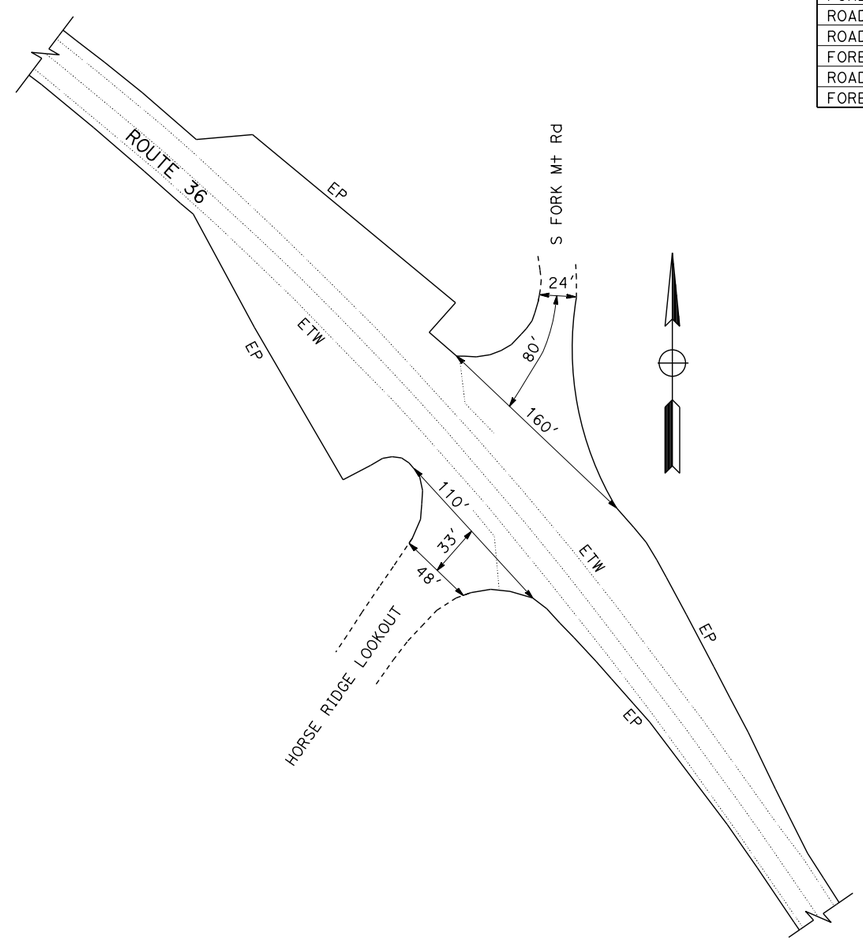

SOUTH FORK Mt ROAD AND HORSE RIDGE LOOKOUT ROAD CONNECTION PAVING LIMIT DETAIL

CONSTRUCTION DETAILS

NO SCALE

C-1

REVISED BY | DATE REVISED
SCOTT GREGORY | KARLIE SMITH
CALCULATED-DESIGNED BY | CHECKED BY
FUNCTIONAL SUPERVISOR | MICHAEL CONNER

Caltrans® STATE OF CALIFORNIA - DEPARTMENT OF TRANSPORTATION **MAINTENANCE**

\\st02caddm02\cadd\proj3\02\1h020_plans\pse\21h020ga001.dgn

LAST REVISION 11-30-15 | DATE PLOTTED => 09-FEB-2016 | TIME PLOTTED => 16:03

Dist	COUNTY	ROUTE	POST MILES TOTAL PROJECT	SHEET No.	TOTAL SHEETS
02	Tri	36	R9.2/15.8	4	25

Scott C Gregory 11-30-15
REGISTERED CIVIL ENGINEER DATE

11-30-15
PLANS APPROVAL DATE

REGISTERED PROFESSIONAL ENGINEER SCOTT C. GREGORY No. C75565 Exp. 06-30-16 CIVIL STATE OF CALIFORNIA

THE STATE OF CALIFORNIA OR ITS OFFICERS OR AGENTS SHALL NOT BE RESPONSIBLE FOR THE ACCURACY OR COMPLETENESS OF SCANNED COPIES OF THIS PLAN SHEET.

NOTES:

1. FOR TEMPORARY CONSTRUCTION TAPERS, GRIND EXISTING SURFACES TO ACCOMMODATE A MINIMUM TAPER THICKNESS OF 0.10′ WHEN EITHER:
   A. HMA MATERIAL SUCH AS RUBBERIZED, POLYMER MODIFIED OR OPEN GRADED IS UNSUITABLE FOR RAKING TO A MAXIMUM 0.02′ THICKNESS AT THE CONFORM.
   B. TEMPORARY TAPER WILL BE IN PLACE FOR MORE THAN 14 DAYS.
2. PERMANENT SURFACE MAY BE EXISTING OR NEW PAVEMENT.
3. ROADWAY SURFACE IS THE TOP OF EXISTING SURFACE OR THE TOP OF THE PLANED SURFACE.
4. EXISTING UTILITY FACILITIES HAVE NOT BEEN INCLUDED IN THESE PLANS. LOCATIONS OF WORK ARE FLEXIBLE AND MAY BE ADJUSTED TO MITIGATE ANY CONFLICTS WITH EXISTING UTILITY FACILITIES.

LEGEND:

HMA MATERIAL (TEMPORARY TAPER)

IF NECESSARY, COLD PLANE ASPHALT CONCRETE PAVEMENT AND PLACE HMA MATERIAL (SEE NOTE 1)

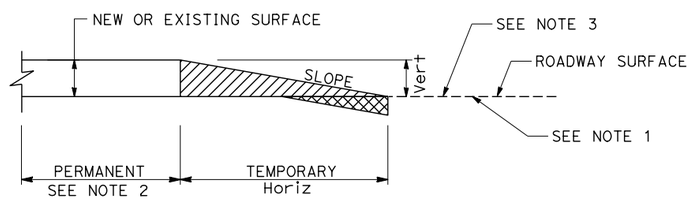

Vert	SLOPE RATIO Horiz/Vert
0-0.10′	70:1
GREATER THAN 0.10′	160:1

TYPICAL PAVING CONFORM FOR TEMPORARY CONSTRUCTION TAPERS

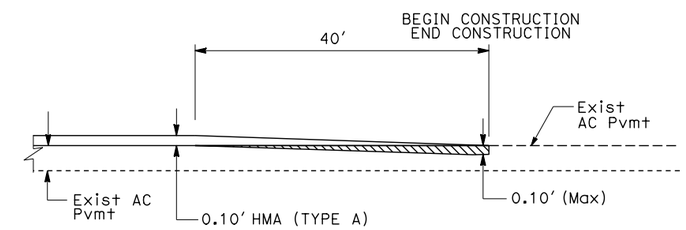

MAINLINE CONFORM TAPER

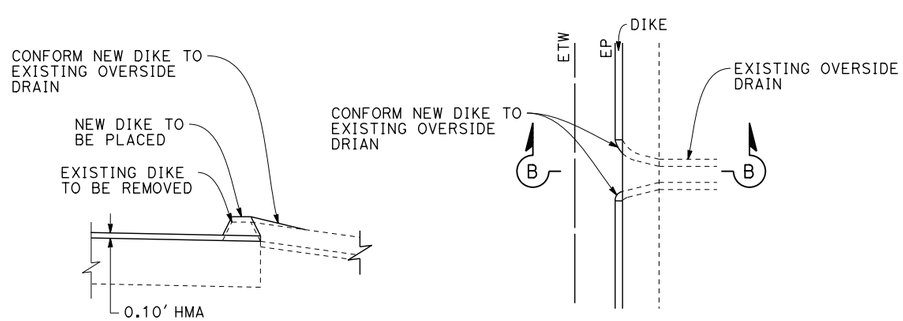

SECTION B-B

PLAN

TYPICAL OVERSIDE DRAIN CONFORM

CONSTRUCTION DETAILS

NO SCALE **C-2**

REVISED BY	DATE REVISED

SCOTT GREGORY — CALCULATED-DESIGNED BY
KARLIE SMITH — CHECKED BY
MICHAEL CONNER — FUNCTIONAL SUPERVISOR

STATE OF CALIFORNIA - DEPARTMENT OF TRANSPORTATION
Caltrans® MAINTENANCE

\\st02caddm02\cadd\proj13\02\1h020_plans\pse\21h020ga002.dgn

LAST REVISION 11-30-15 | DATE PLOTTED => 09-FEB-2016 | TIME PLOTTED => 16:03

Dist	COUNTY	ROUTE	POST MILES TOTAL PROJECT	SHEET No.	TOTAL SHEETS
02	Tri	36	R9.2/15.8	5	25

REGISTERED CIVIL ENGINEER 11-30-15 DATE

11-30-15
PLANS APPROVAL DATE

REGISTERED PROFESSIONAL ENGINEER SCOTT C. GREGORY No. C75565 Exp. 06-30-16 CIVIL STATE OF CALIFORNIA

THE STATE OF CALIFORNIA OR ITS OFFICERS OR AGENTS SHALL NOT BE RESPONSIBLE FOR THE ACCURACY OR COMPLETENESS OF SCANNED COPIES OF THIS PLAN SHEET.

NOTES:

1. "ADD GUARDRAIL" IS GUARDRAIL REMOVED FROM ONE LOCATION AND RECONSTRUCTED IN ANOTHER.
2. SEE SHEET Q-1 FOR QUANTITIES.
3. POST MILES WERE MEASURED FROM THE MILEPOST MARKERS IN THE INCREASING DIRECTION.
4. NEW AFTS, AITS OR SFT STARTS WHERE INDICATED BY ARROW.
5. EXISTING UTILITY FACILITIES HAVE NOT BEEN INCLUDED IN THESE PLANS. LOCATIONS OF WORK ARE FLEXIBLE AND MAY BE ADJUSTED TO MITIGATE ANY CONFLICTS WITH EXISTING UTILITY FACILITIES.

ABBREVIATIONS:

REW	RAIL ELEMENT WALL
AFTS	ALTERNATE FLARED TERMINAL SYSTEM
AITS	ALTERNATE IN-LINE TERMINAL SYSTEM

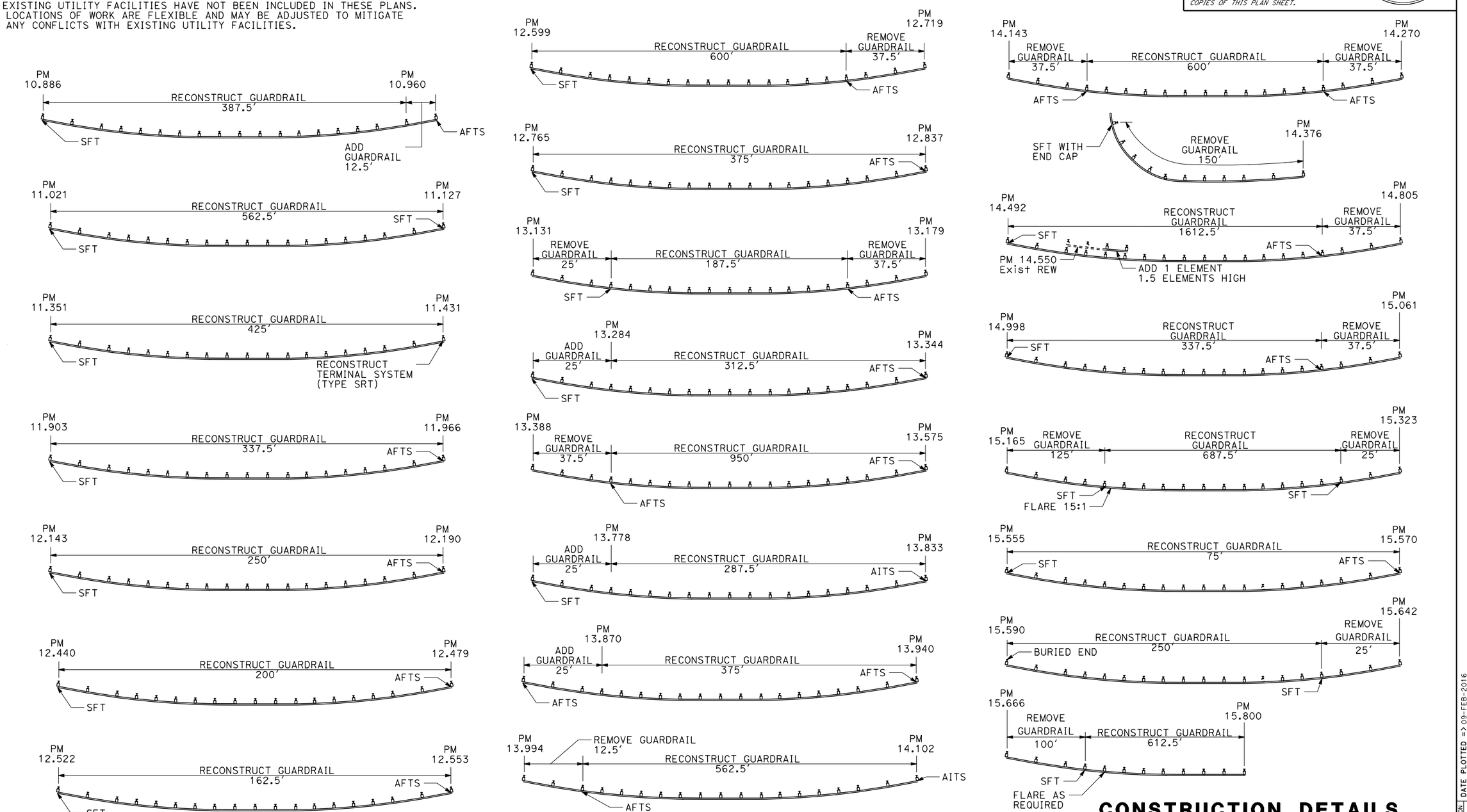

CONSTRUCTION DETAILS

NO SCALE

C-3

REVISED BY	DATE REVISED

SCOTT GREGORY — CALCULATED-DESIGNED BY
KARLIE SMITH — CHECKED BY
MICHAEL CONNER — FUNCTIONAL SUPERVISOR

STATE OF CALIFORNIA - DEPARTMENT OF TRANSPORTATION
Caltrans MAINTENANCE

\\st02caddm02\cadd\proj3\02\1h020_plans\pse\21h020ga003.dgn

LAST REVISION 11-30-15
DATE PLOTTED => 09-FEB-2016
TIME PLOTTED => 16:03

Dist	COUNTY	ROUTE	POST MILES TOTAL PROJECT	SHEET No.	TOTAL SHEETS
02	Tri	36	R9.2/15.8	6	25

Scott C. Gregory 11-30-15
REGISTERED CIVIL ENGINEER DATE

11-30-15
PLANS APPROVAL DATE

REGISTERED PROFESSIONAL ENGINEER SCOTT C. GREGORY No. C75565 Exp. 06-30-16 CIVIL STATE OF CALIFORNIA

THE STATE OF CALIFORNIA OR ITS OFFICERS OR AGENTS SHALL NOT BE RESPONSIBLE FOR THE ACCURACY OR COMPLETENESS OF SCANNED COPIES OF THIS PLAN SHEET.

NOTES:

1. SEE SHEET Q-1 FOR QUANTITIES.
2. POST MILES WERE MEASURED FROM THE MILEPOST MARKERS IN THE INCREASING DIRECTION.
3. EXISTING UTILITY FACILITIES HAVE NOT BEEN INCLUDED IN THESE PLANS. LOCATIONS OF WORK ARE FLEXIBLE AND MAY BE ADJUSTED TO MITIGATE ANY CONFLICTS WITH EXISTING UTILITY FACILITIES.
4. PLACE SFT A MINIMUM OF 21′ FROM CENTERLINE OF ROADWAY.
5. NEW AFTS, AITS OR SFT STARTS WHERE INDICATED BY ARROW.

LEGEND:

WOOD MULCH, THICKNESS 0.33′

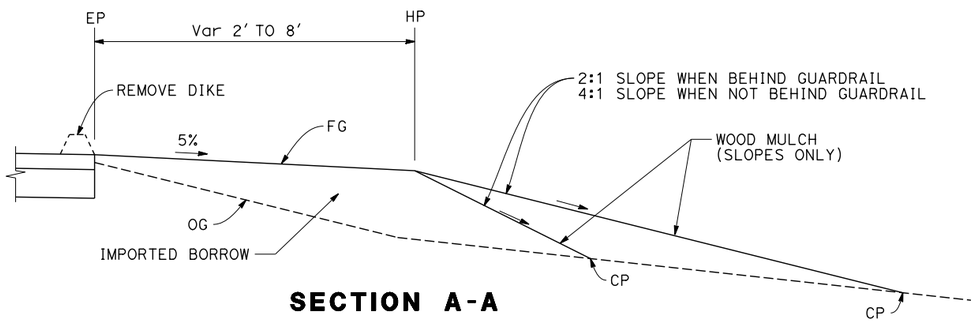

SECTION A-A
GUARDRAIL NOT SHOWN

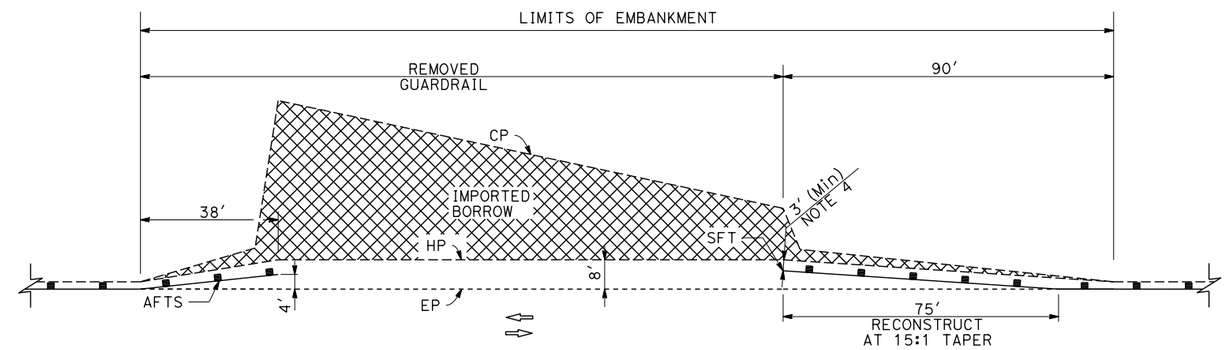

DETAIL A

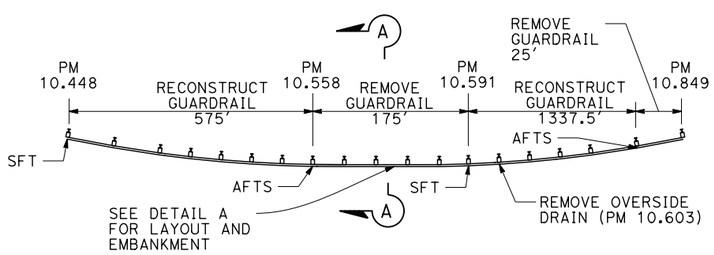

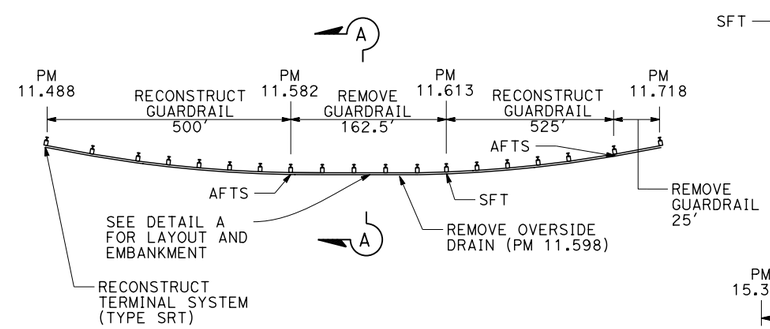

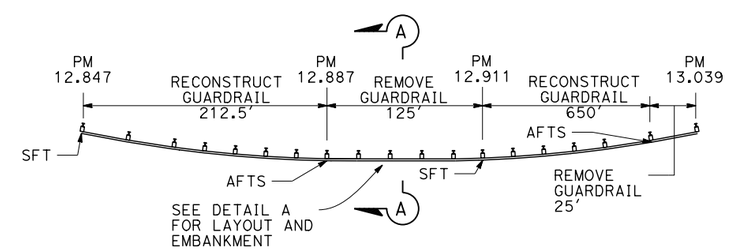

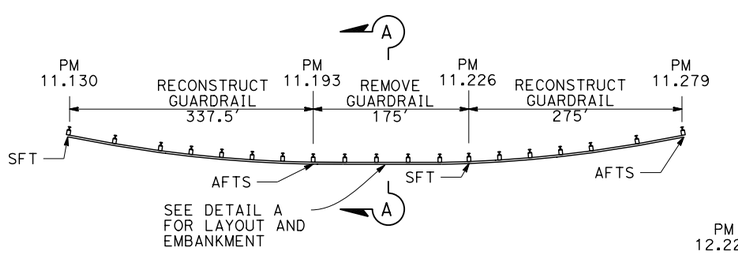

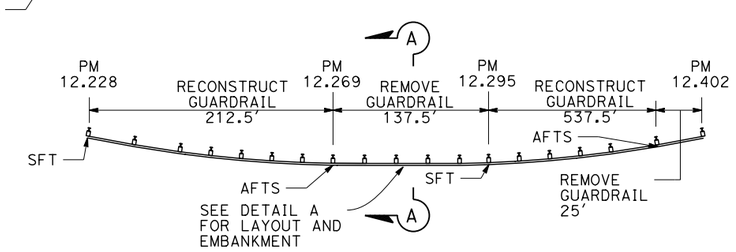

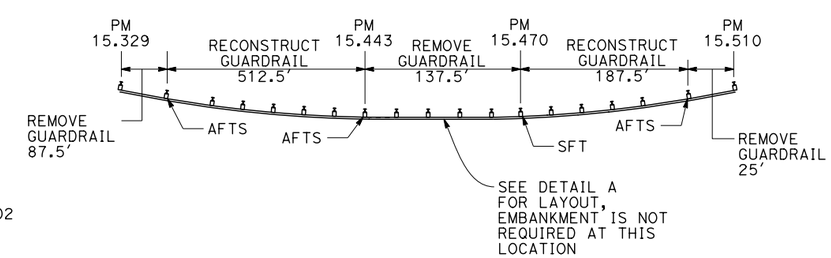

CONSTRUCTION DETAILS
NO SCALE

C-4

REVISED BY	DATE REVISED

CALCULATED-DESIGNED BY	CHECKED BY
SCOTT GREGORY	KARLIE SMITH

FUNCTIONAL SUPERVISOR: MICHAEL CONNER

STATE OF CALIFORNIA - DEPARTMENT OF TRANSPORTATION
Caltrans® MAINTENANCE

\\st02caddm02\cadd\proj3\02\1h020_plans\pse\21h020ga004.dgn

LAST REVISION 11-30-15
DATE PLOTTED => 09-FEB-2016
TIME PLOTTED => 16:03

Dist	COUNTY	ROUTE	POST MILES TOTAL PROJECT	SHEET No.	TOTAL SHEETS
02	Tri	36	R9.2/15.8	7	25

Scott C. Gregory 11-30-15
REGISTERED CIVIL ENGINEER DATE

11-30-15
PLANS APPROVAL DATE

REGISTERED PROFESSIONAL ENGINEER SCOTT C. GREGORY No. C75565 Exp. 06-30-16 CIVIL STATE OF CALIFORNIA

THE STATE OF CALIFORNIA OR ITS OFFICERS OR AGENTS SHALL NOT BE RESPONSIBLE FOR THE ACCURACY OR COMPLETENESS OF SCANNED COPIES OF THIS PLAN SHEET.

NOTES:

1. SEE MEASURE HEIGHT AT GRADE BREAK DETAIL SHEET C-6.
2. FOR RAIL ELEMENT AND HARDWARE DETAILS USE MGS DETAILS SHOWN ON REVISED STANDARD PLANS RSP A77L2 AND RSP A77M1.
3. FOR DETAILS OF POSTS AND BLOCKS USED TO CONSTRUCT GUARDRAIL SEE REVISED STANDARD PLAN RSP A77N2.
4. A SINGLE LINE POST POST MAY BE OFFSET UP TO 12" INLINE WITH THE GUARDRAIL.
5. SEE TYPICAL LEAVE-OUT AREA SHEET C-8 WHEN INSTALLING POST THROUGH PAVEMENT.
6. PLACE GUARDRAIL SO THE FACE OF RAIL IS 1' FROM EP.
7. FOR BOLTED CONNECTION OF RAIL ELEMENT TO BLOCK AND POST, SEE "RAIL ELEMENT SPLICE DETAIL" AND "SECTON THRU RAIL ELEMENT", REVISED STANDARD PLAN RSP A77L2.
8. TO CONNECT RAILING TO TERMINAL SYSTEM END TREATMENT, TRANSITION THE TOP OF RAILING HEIGHT AT A RATIO OF 120:1 TO TERMINAL SYSTEM END TREATMENT HEIGHT PLUS ONE 12'-6" STANDARD RAILING SECTION AT THE TERMINAL HEIGHT.
9. ADDITIONAL HOLE IN UPPERMOST PORTION OF LINE POST IS FOR POTENTIAL FUTURE ADJUSTMENTS OF RAILING HEIGHT. SEE REVISED STANDARD PLAN RSP A77N2.
10. BLOCKS MUST HAVE MEANS TO RESIST ROTATION OTHER THAN THROUGH BOLT. FOR WOOD POST, TOENAIL BLOCKS TO POST WITH 2-16D Galv NAILS.
11. DIMENSIONS FOR POST AND BLOCKS ARE NOMINAL.
12. EXISTING UTILITY FACILITIES HAVE NOT BEEN INCLUDED IN THESE PLANS. LOCATIONS OF WORK ARE FLEXIBLE AND MAY BE ADJUSTED TO MITIGATE ANY CONFLICTS WITH EXISTING UTILITY FACILITIES.

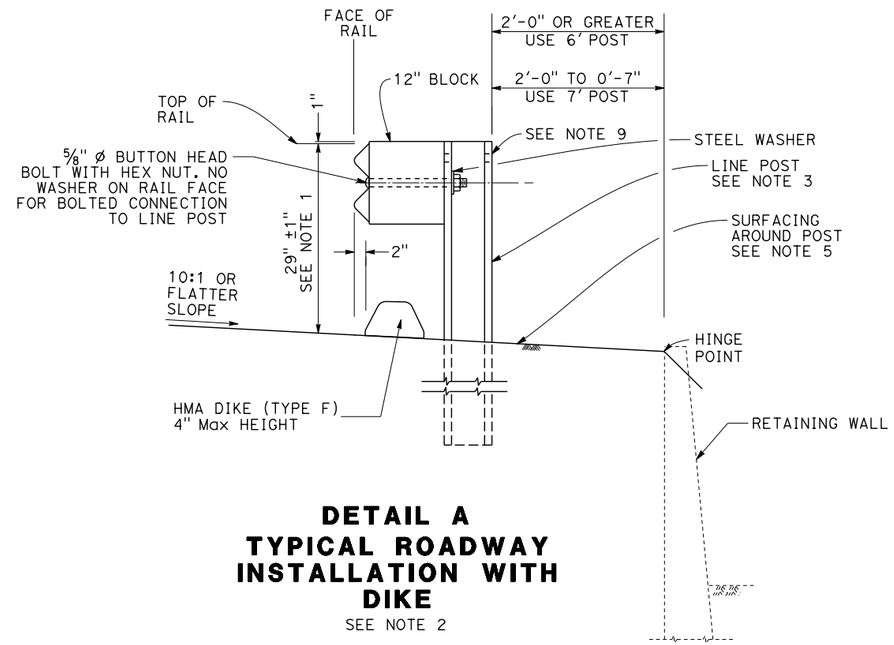

DETAIL A
TYPICAL ROADWAY INSTALLATION WITH DIKE
SEE NOTE 2

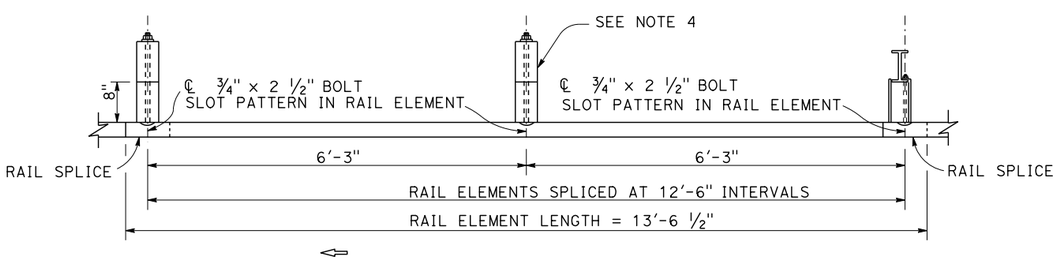

PLAN

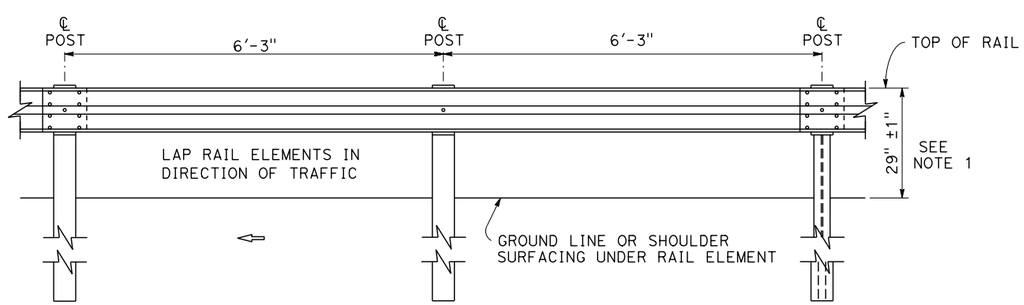

ELEVATION
GUARD RAILING

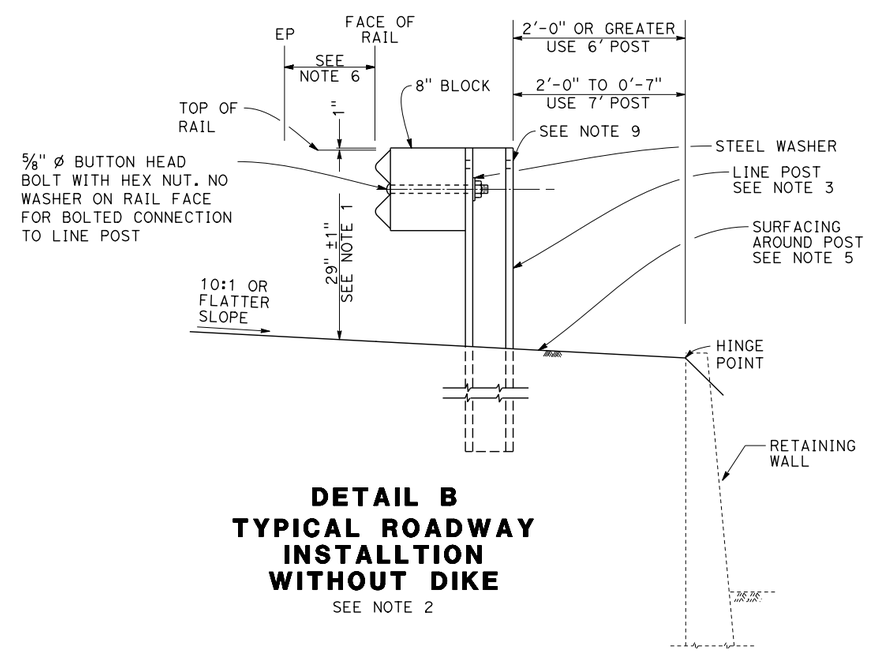

DETAIL B
TYPICAL ROADWAY INSTALLTION WITHOUT DIKE
SEE NOTE 2

CONSTRUCTION DETAILS

NO SCALE

C-5

REVISED BY	DATE REVISED
SCOTT GREGORY	KARLIE SMITH

CALCULATED-DESIGNED BY / CHECKED BY

FUNCTIONAL SUPERVISOR: MICHAEL CONNER

STATE OF CALIFORNIA - DEPARTMENT OF TRANSPORTATION
Caltrans® **MAINTENANCE**

\\st02caddm02\cadd\proj3\02\1h020\plans\pse\21h020ga005.dgn

LAST REVISION 11-30-15 | DATE PLOTTED => 09-FEB-2016 | TIME PLOTTED => 16:03

Dist	COUNTY	ROUTE	POST MILES TOTAL PROJECT	SHEET No.	TOTAL SHEETS
02	Tri	36	R9.2/15.8	8	25

Scott C Gregory 11-30-15
REGISTERED CIVIL ENGINEER DATE

11-30-15
PLANS APPROVAL DATE

REGISTERED PROFESSIONAL ENGINEER SCOTT C. GREGORY No. C75565 Exp. 06-30-16 CIVIL STATE OF CALIFORNIA

THE STATE OF CALIFORNIA OR ITS OFFICERS OR AGENTS SHALL NOT BE RESPONSIBLE FOR THE ACCURACY OR COMPLETENESS OF SCANNED COPIES OF THIS PLAN SHEET.

NOTES:

1. FOR POST AND BLOCK DETAILS SEE REVISED STANDARD PLAN RSP A77N2. FOR RAIL ELEMENT AND HARDWARE DETAILS, USE MGS DETAILS SHOWN ON REVISED STANDARD PLANS RSP A77L2 AND RSP A77M1.
2. WHEN THERE IS A BREAK POINT IN FRONT OF GUARDRAIL BETWEEN 4'-8' THE HEIGHT WILL BE DETERMINED BY THE ENGINEER.
3. PLACE RUB RAIL (GUARDRAIL ELEMENT) AND ATTACH TO POST WITH NO BLOCK WHEN HEIGHT OF GUARDRAIL IS MORE THAN 32" ABOVE FINISH GRADE UNDER FACE OF RAIL.
4. PLACE L-1 MARKER WHERE GUARDRAIL FIRST GETS PARALLEL/CLOSEST TO ETW. IF THE PAVED SHOULDER IS REDUCED APPROACHING A FIXED OBJECT, PLACE A "P" MARKER INSTEAD OF THE L-1 MARKER.
5. EXISTING UTILITY FACILITIES HAVE NOT BEEN INCLUDED IN THESE PLANS. LOCATIONS OF WORK ARE FLEXIBLE AND MAY BE ADJUSTED TO MITIGATE ANY CONFLICTS WITH EXISTING UTILITY FACILITIES.

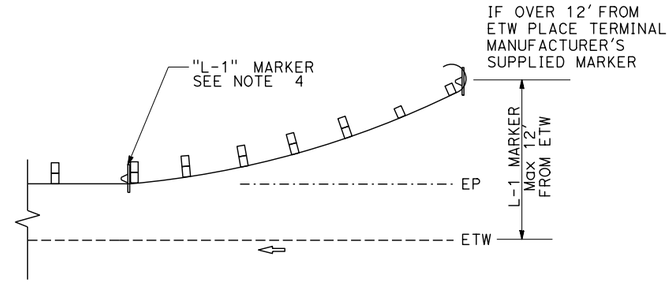

GUARDRAIL DELINEATION

PLACE OBJECT MARKER(S) TO DELINEATE FIXED OBJECTS WITHIN 12' OF ETW.

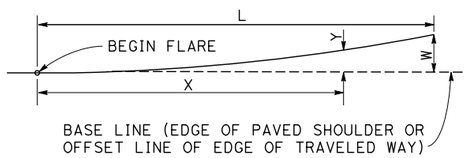

$$Y = \frac{WX^2}{L^2}$$

Y = OFFSET FROM BASE LINE
W = MAXIMUM OFFSET
X = DISTANCE ALONG BASE LINE
L = LENGTH OF FLARE

PARABOLIC FLARE OFFSETS

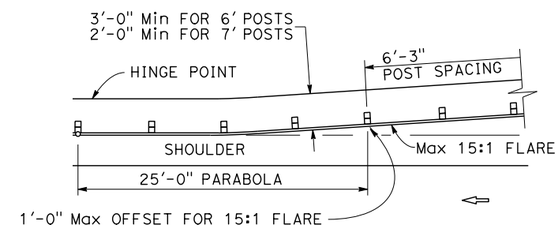

GUARDRAIL WITH FLARED ALIGNMENT

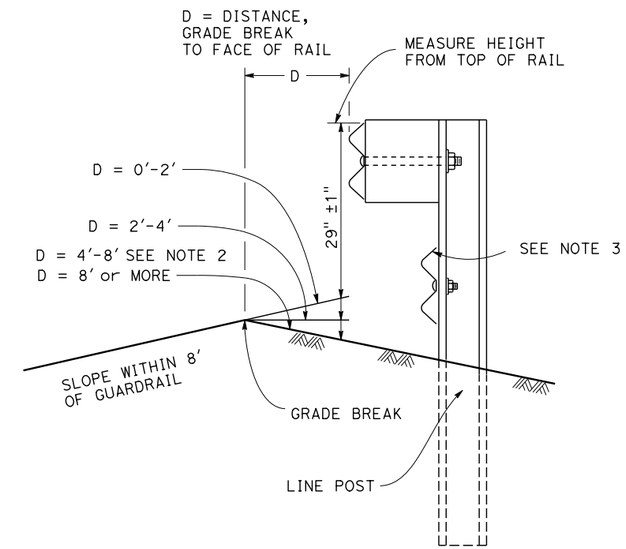

MEASURE HEIGHT DETAIL AT GRADE BREAK

NOTE:
WHEN THERE IS A GRADE BREAK IN FRONT OF GUARDRAIL MEASURE HEIGHT OF GUARDRAIL BASED ON DISTANCE FROM GRADE BREAK TO ADJUST FOR TRAJECTORY.

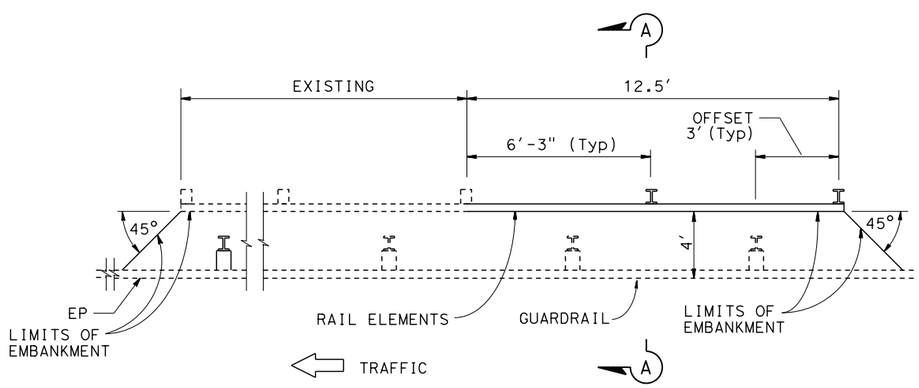

PLAN

RAIL ELEMENT WALL

PM 14.55

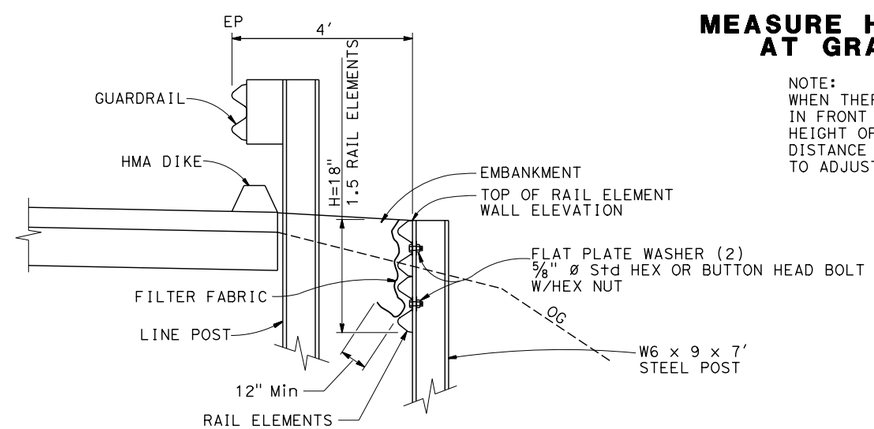

SECTION A-A

CONSTRUCTON DETAILS

NO SCALE

C-6

REVISED BY | DATE REVISED
SCOTT GREGORY | KARLIE SMITH
CALCULATED-DESIGNED BY | CHECKED BY
FUNCTIONAL SUPERVISOR | MICHAEL CONNER
STATE OF CALIFORNIA - DEPARTMENT OF TRANSPORTATION
Caltrans® MAINTENANCE
\\st02caddm02\cadd\proj3\02\1h020_plans\pse\21h020ga006.dgn

LAST REVISION 11-30-15 | DATE PLOTTED => 09-FEB-2016 | TIME PLOTTED => 16:03

Dist	COUNTY	ROUTE	POST MILES TOTAL PROJECT	SHEET No.	TOTAL SHEETS
02	Tri	36	R9.2/15.8	9	25

REGISTERED CIVIL ENGINEER 11-30-15 DATE

11-30-15
PLANS APPROVAL DATE

REGISTERED PROFESSIONAL ENGINEER SCOTT C. GREGORY No. C75565 Exp. 06-30-16 CIVIL STATE OF CALIFORNIA

THE STATE OF CALIFORNIA OR ITS OFFICERS OR AGENTS SHALL NOT BE RESPONSIBLE FOR THE ACCURACY OR COMPLETENESS OF SCANNED COPIES OF THIS PLAN SHEET.

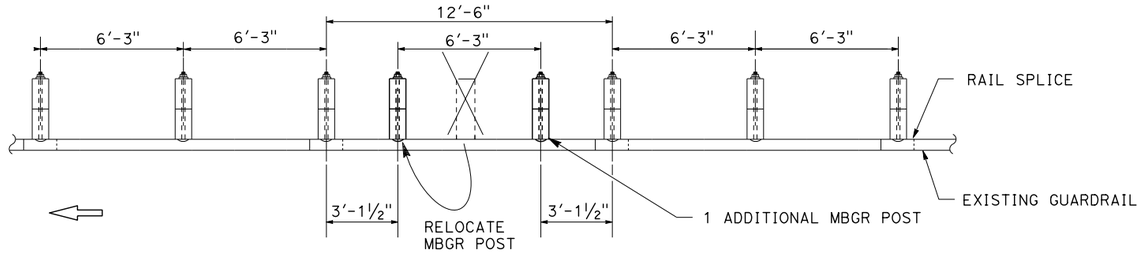

CASE 1

(ONE POST CONFLICT, MOVE THE POST AND ADD ONE POST)
(NO NESTED RAIL REQUIRED)

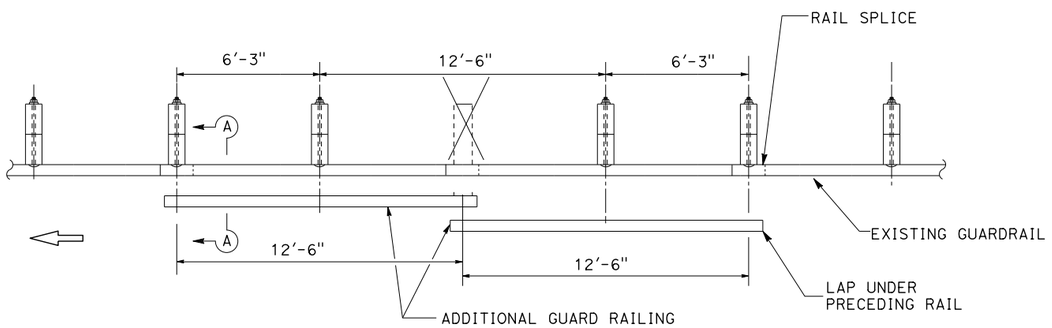

CASE 2

(ONE POST OMITTED AT JUNCTION OF TWO ELEMENTS)
(NEST TWO LENGTHS OF RAIL REQUIRED)

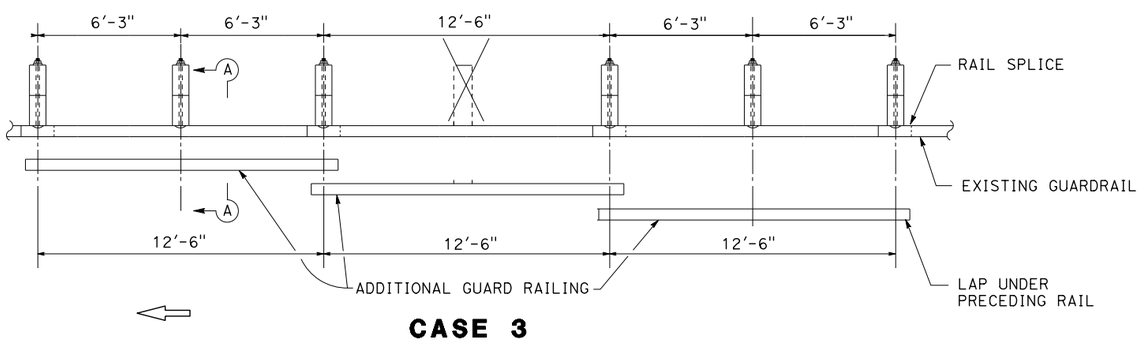

CASE 3

(ONE POST OMITTED AT CENTER OF OF ELEMENT)
(NEST THREE LENGTHS OF RAIL REQUIRED)
(ONE ADDITIONAL POST MAY BE OMITTED SEE NOTE 3)

NOTES:

1. NEST ALL RAILS AT EXISTING RAIL LAPS.
2. WHEN A POST IS REMOVED AND THE RAIL ELEMENTS ARE NESTED, THE NESTED ELEMENTS MUST BE SUPPORTED BY A Min OF 2 POST EACH SIDE OF THE OMITTED POST.
3. USING CASE 3, A SECOND ADJACENT POST CAN BE REMOVED IF THE NESTED RAIL ELEMENTS ARE SUPPORTED BY A Min OF 2 POSTS EACH SIDE OF THE MISSING POSTS. THE 2-POST OPTION USES CASE 3 BUT NOT SHOWN.
4. EXISTING UTILITY FACILITIES HAVE NOT BEEN INCLUDED IN THESE PLANS. LOCATIONS OF WORK ARE FLEXIBLE AND MAY BE ADJUSTED TO MITIGATE ANY CONFLICTS WITH EXISTING UTILITY FACILITIES.

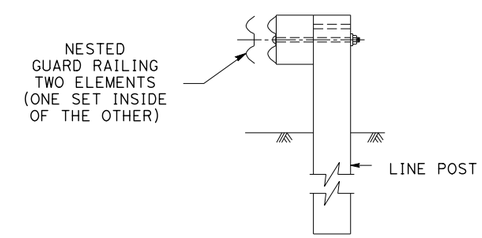

SECTION A-A

TYPICAL RAILING OVERLAP INSTALLATION AT POST

CONSTRUCTION DETAILS
LONG SPAN NESTED GUARD RAILING

NO SCALE

C-7

REVISED BY	DATE REVISED

CALCULATED-DESIGNED BY	CHECKED BY
SCOTT GREGORY	KARLIE SMITH

FUNCTIONAL SUPERVISOR
MICHAEL CONNER

STATE OF CALIFORNIA - DEPARTMENT OF TRANSPORTATION
Caltrans® MAINTENANCE

\\st02cadam02\cadd\proj3\02\1h020_plans\pse\21h020ga007.dgn

LAST REVISION 11-30-15
DATE PLOTTED => 09-FEB-2016
TIME PLOTTED => 16:04

Dist	COUNTY	ROUTE	POST MILES TOTAL PROJECT	SHEET No.	TOTAL SHEETS
02	Tri	36	R9.2/15.8	10	25

REGISTERED CIVIL ENGINEER 11-30-15 DATE

11-30-15
PLANS APPROVAL DATE

REGISTERED PROFESSIONAL ENGINEER SCOTT C. GREGORY No. C75565 Exp. 06-30-16 CIVIL STATE OF CALIFORNIA

THE STATE OF CALIFORNIA OR ITS OFFICERS OR AGENTS SHALL NOT BE RESPONSIBLE FOR THE ACCURACY OR COMPLETENESS OF SCANNED COPIES OF THIS PLAN SHEET.

NOTES:

1. LEAVE-OUT AREA MAY BE RETANGULAR OR ROUND SO LONG AS THE CLEARANCES SHOWN ARE MAINTAINED.
2. FOR LINE POST SIZES, SEE REVISED STANDARD PLAN RSP A77N2.
3. FOR DETAILS NOT SHOWN, SEE REVISED STANDARD PLANS RSP A77L2.
4. EXISTING UTILITY FACILITIES HAVE NOT BEEN INCLUDED IN THESE PLANS. LOCATIONS OF WORK ARE FLEXIBLE AND MAY BE ADJUSTED TO MITIGATE ANY CONFLICTS WITH EXISTING UTILITY FACILITIES.

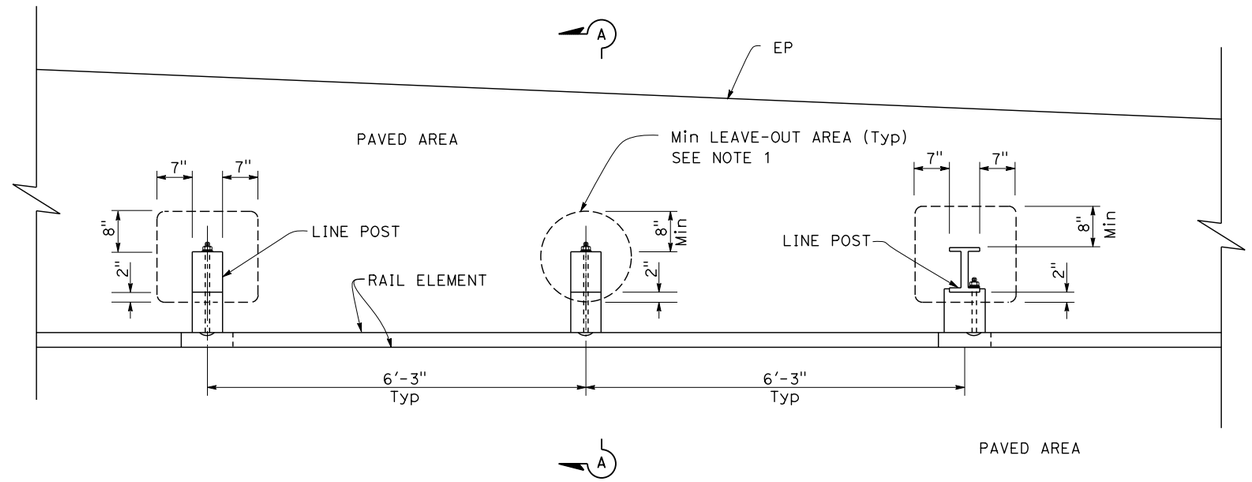

GUARDRAIL PLACED IN PAVED AREAS

PLAN

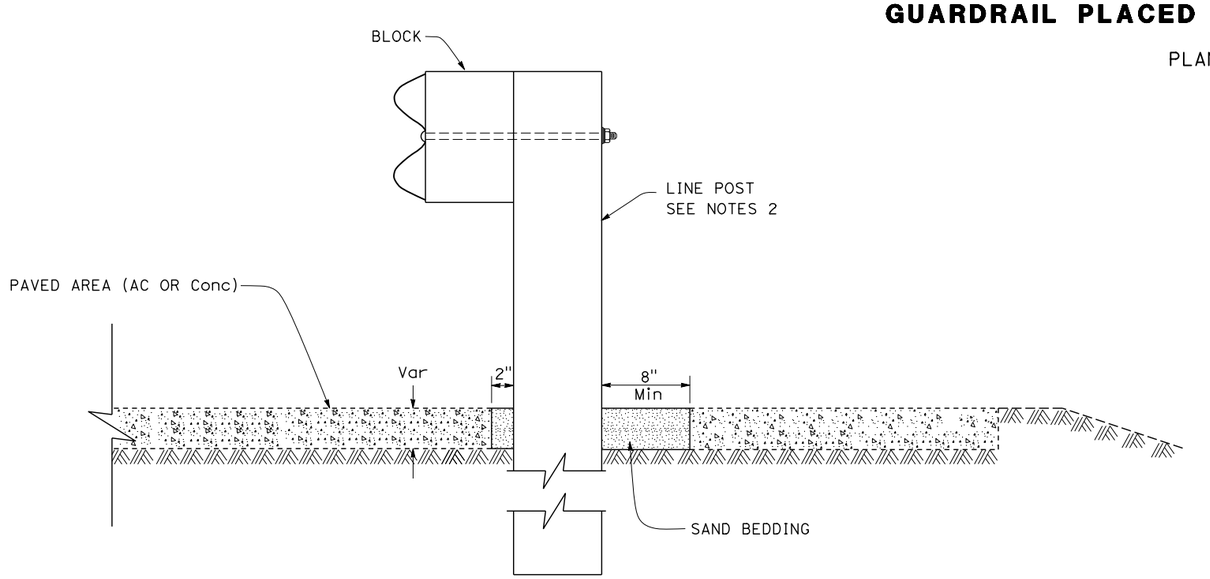

SECTION A-A

CONSTRUCTON DETAILS

NO SCALE

C-8

REVISED BY	DATE REVISED
SCOTT GREGORY	KARLIE SMITH
CALCULATED-DESIGNED BY	CHECKED BY
FUNCTIONAL SUPERVISOR	MICHAEL CONNER

STATE OF CALIFORNIA - DEPARTMENT OF TRANSPORTATION
Caltrans® MAINTENANCE

P:\proj3\02\1h020_plans\pse\21h020ga008.dgn

LAST REVISION 11-30-15
DATE PLOTTED => 09-FEB-2016
TIME PLOTTED => 16:04

Dist	COUNTY	ROUTE	POST MILES TOTAL PROJECT	SHEET No.	TOTAL SHEETS
02	Tri	36	R9.2/15.8	11	25

Scott C Gregory 11-30-15
REGISTERED CIVIL ENGINEER DATE

11-30-15
PLANS APPROVAL DATE

REGISTERED PROFESSIONAL ENGINEER SCOTT C. GREGORY No. C75565 Exp. 06-30-16 CIVIL STATE OF CALIFORNIA

THE STATE OF CALIFORNIA OR ITS OFFICERS OR AGENTS SHALL NOT BE RESPONSIBLE FOR THE ACCURACY OR COMPLETENESS OF SCANNED COPIES OF THIS PLAN SHEET.

NOTES:

1. EXACT LOCATION OF ALL SIGNS TO BE DETERMINED BY THE ENGINEER.
2. CALIFORNIA CODES ARE DESIGNATED BY (CA), OTHERWISE FEDERAL CODES ARE SHOWN.
3. INTERMEDIATE C11(CA) SIGNS SHOULD BE PLACED EVERY 3 TO 5 MILES AS NECESSARY.
4. EXISTING UTILITY FACILITIES HAVE NOT BEEN INCLUDED IN THESE PLANS. LOCATIONS OF WORK ARE FLEXIBLE AND MAY BE ADJUSTED TO MITIGATE ANY CONFLICTS WITH EXISTING UTILITY FACILITIES.

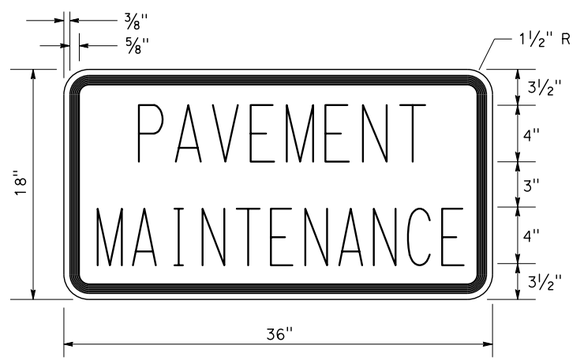

C23B(CA) SIGN PANEL DETAIL

LOCAL ROADS

PM	DESCRIPTION
10.11	S FORK M† Rd - L†
10.12	HORSE RIDGE LOOKOUT - R†

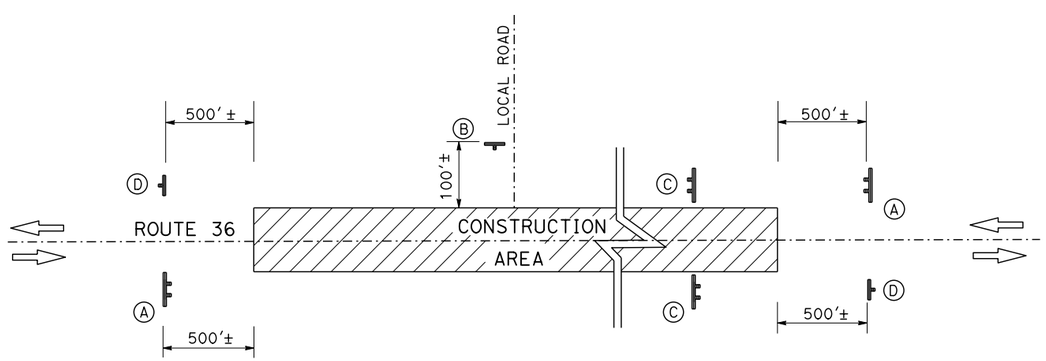

CONSTRUCTION AREA SIGNS (STATIONARY MOUNTED)

TYPE	CODE	PANEL SIZE	SIGN MESSAGE	No. AND SIZE OF POST	No. OF SIGNS
Ⓐ	C11(CA) C23B(CA)	60" x 36" 36" x 18"	ROAD CONSTRUCTION NEXT XX MILES PAVEMENT MAINTENANCE	2-4" x 6"	2
Ⓑ	W20-1	48" x 48"	ROAD WORK AHEAD	1-4" x 6"	2
Ⓒ	C11(CA)	60" x 36"	ROAD CONSTRUCTION NEXT XX MILES	2-4" x 6"	2
Ⓓ	G20-2	36" x 18"	END ROAD WORK	1-4" x 4"	2

CONSTRUCTION AREA SIGNS

NO SCALE

CS-1

REVISED BY	DATE REVISED
SCOTT GREGORY	KARLIE SMITH
CALCULATED-DESIGNED BY	CHECKED BY
FUNCTIONAL SUPERVISOR	MICHAEL CONNER

STATE OF CALIFORNIA - DEPARTMENT OF TRANSPORTATION
Caltrans MAINTENANCE

P:\proj3\02\1h020_plans\pse\21h0201a001.dgn

LAST REVISION 11-30-15
DATE PLOTTED => 09-FEB-2016
TIME PLOTTED => 16:04

Dist	COUNTY	ROUTE	POST MILES TOTAL PROJECT	SHEET No.	TOTAL SHEETS
02	Tri	36	R9.2/15.8	12	25

Scott C. Gregory 11-30-15
REGISTERED CIVIL ENGINEER DATE

11-30-15
PLANS APPROVAL DATE

REGISTERED PROFESSIONAL ENGINEER SCOTT C. GREGORY No. C75565 Exp. 06-30-16 CIVIL STATE OF CALIFORNIA

THE STATE OF CALIFORNIA OR ITS OFFICERS OR AGENTS SHALL NOT BE RESPONSIBLE FOR THE ACCURACY OR COMPLETENESS OF SCANNED COPIES OF THIS PLAN SHEET.

NOTES:

1. (N) - NOT A SEPARATE PAY ITEM, FOR INFORMATION ONLY.
2. FOR CULVERT AND OSD MARKERS LOCATED AGAINST GUARDRAIL.

REMOVE THERMOPLASTIC PAVEMENT MARKING

PM	L†	R†	(N) EA	SQFT	REMARKS
10.11	X		1	22	STOP
10.11	X		1	55	ROAD CONNECTION LIMIT LINE
10.12		X	1	22	STOP
10.12		X	1	54	ROAD CONNECTION LIMIT LINE
11.09		X	1	22	STOP
11.09		X	1	53	ROAD CONNECTION LIMIT LINE
12.57	X		1	22	STOP
12.57	X		1	35	ROAD CONNECTION LIMIT LINE
13.80		X	1	22	STOP
13.80		X	1	40	ROAD CONNECTION LIMIT LINE
14.35	X		1	22	STOP
14.35	X		1	36	ROAD CONNECTION LIMIT LINE
TOTAL				405	

THERMOPLASTIC PAVEMENT MARKING

PM	L†	R†	(N) EA	SQFT	REMARKS
10.11	X		1	22	STOP
10.11	X		1	55	ROAD CONNECTION LIMIT LINE
10.12		X	1	22	STOP
10.12		X	1	54	ROAD CONNECTION LIMIT LINE
11.09		X	1	22	STOP
11.09		X	1	53	ROAD CONNECTION LIMIT LINE
12.57	X		1	22	STOP
12.57	X		1	35	ROAD CONNECTION LIMIT LINE
13.80		X	1	22	STOP
13.80		X	1	40	ROAD CONNECTION LIMIT LINE
14.35	X		1	22	STOP
14.35	X		1	36	ROAD CONNECTION LIMIT LINE
TOTAL				405	

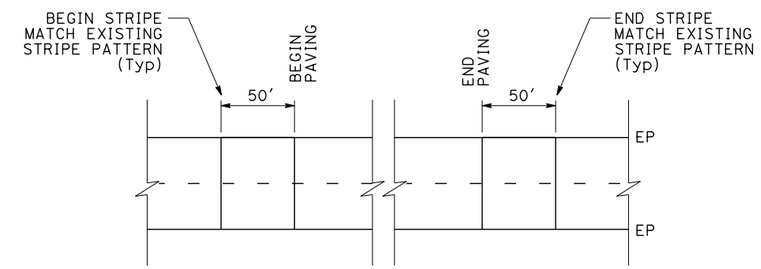

TRAFFIC STRIPE MATCH DETAIL

THERMOPLASTIC TRAFFIC STRIPE (SPRAYABLE)

POSTMILE LIMITS	DETAIL 5	DETAIL 18	DETAIL 21	DETAIL 27B	DETAIL 27C	DETAIL 38A
	LF	LF	LF	LF	LF	LF
R9.2-15.8	476	851	29,352	59,781	1574	851
TOTAL	92,885					

(N) REMOVE PAVEMENT MARKER

POST MILE LIMITS	EA
R9.2-15.8	2448
TOTAL	2448

RESET MARKER

POST MILE LIMITS	EA
R9.2-15.8	104
TOTAL	104

SEE NOTE 2

RESET MILEPOST MARKER

POST MILE LIMITS	EA
R9.2-15.8	14
TOTAL	14

REMOVE DELINEATOR

POST MILE LIMITS	EA
R9.2-15.8	172
TOTAL	172

TEMPORARY PAVEMENT MARKING (TAPE)

PM	L†	R†	(N) EA	SQFT	REMARKS
10.11	X		1	55	ROAD CONNECTION LIMIT LINE
10.12		X	1	54	ROAD CONNECTION LIMIT LINE
11.09		X	1	53	ROAD CONNECTION LIMIT LINE
12.57	X		1	35	ROAD CONNECTION LIMIT LINE
13.80		X	1	40	ROAD CONNECTION LIMIT LINE
14.35	X		1	36	ROAD CONNECTION LIMIT LINE
TOTAL				273	

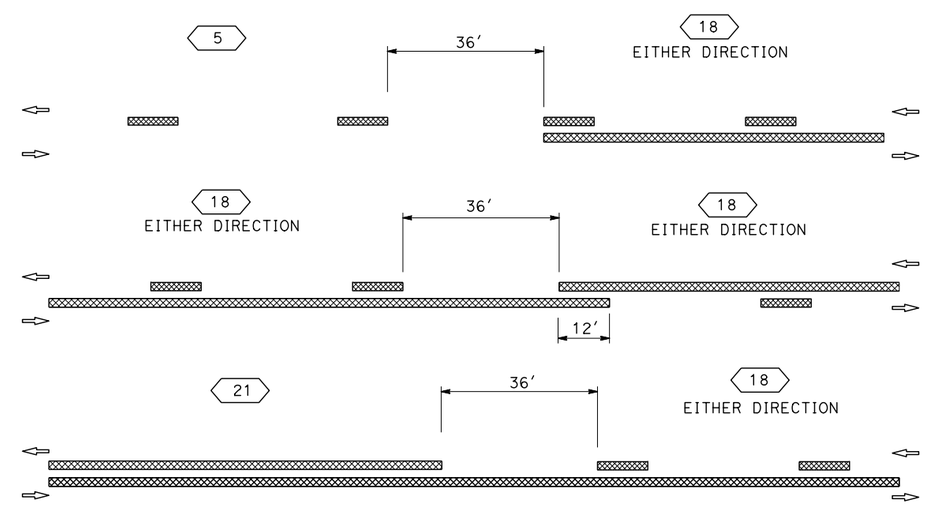

TRAFFIC STRIPE TRANSITION DETAILS

PAVEMENT DELINEATION DETAILS AND QUANTITIES

NO SCALE

PDQ-1

REVISED BY | DATE REVISED
SCOTT GREGORY | KARLIE SMITH
CALCULATED-DESIGNED BY | CHECKED BY
FUNCTIONAL SUPERVISOR | MICHAEL CONNER

STATE OF CALIFORNIA - DEPARTMENT OF TRANSPORTATION
Caltrans® MAINTENANCE

P:\proj3\02\1h020_plans\pse\21h020nc001.dgn

LAST REVISION 11-30-15 | DATE PLOTTED => 09-FEB-2016 | TIME PLOTTED => 16:04

Dist	COUNTY	ROUTE	POST MILES TOTAL PROJECT	SHEET No.	TOTAL SHEETS
02	Tri	36	R9.2/15.8	13	25

Scott C. Gregory 11-30-15
REGISTERED CIVIL ENGINEER DATE

11-30-15
PLANS APPROVAL DATE

REGISTERED PROFESSIONAL ENGINEER SCOTT C. GREGORY No. C75565 Exp. 06-30-16 CIVIL STATE OF CALIFORNIA

THE STATE OF CALIFORNIA OR ITS OFFICERS OR AGENTS SHALL NOT BE RESPONSIBLE FOR THE ACCURACY OR COMPLETENESS OF SCANNED COPIES OF THIS PLAN SHEET.

NOTES:

1. (N) - NOT A SEPARATE PAY ITEM, FOR INFORMATION ONLY.
2. "ADD GUARDRAIL" IS INCLUDED IN THE QUANTITY FOR "RECONSTRUCT GUARDRAIL (7' POSTS).
3. POST MILES WERE MEASURED FROM THE MILEPOST MARKERS IN THE INCREASING DIRECTION.
4. USE STEEL POSTS FOR RECONSTRUCT GUARDRAIL.

GUARD RAILING

POST MILE LIMITS	SIDE R+/L+	RECONSTRUCT GUARDRAIL (12" BLOCKS)	RECONSTRUCT GUARDRIAL (7' POST)	REMOVE GUARDRAIL	(N) ADD GUARDRAIL	RECONSTRUCT TERMINAL SYSTEM (TYPE SRT)	ALTERNATIVE IN-LINE TERMINAL SYSTEM	ALTERNATIVE FLARED TERMINAL SYSTEM	END ANCHOR ASSEMBLY (TYPE SFT)	RAIL ELEMENT WALL	FURNISH RAIL ELEMENT	OBJECT MARKER (TYPE L-1)	(N) BURIED POST END ANCHOR	IMPORTED BORROW	TREATED WOOD WASTE	POST MILE LIMITS
		LF	LF	LF	LF	EA	EA	EA	EA	LF	LF	EA	EA	CY	LB	
10.448-10.849	L+	800	1112.5	200				2	2			4		133	30,182	10.448-10.849
10.886-10.960	L+	262.5	125		12.5			1	1			2			5665	10.886-10.960
11.021-11.127	L+	162.5	400						2						8143	11.021-11.127
11.130-11.279	L+	212.5	400	175				2	2			4		36	11,418	11.130-11.279
11.351-11.431	L+	312.5	112.5			1			1			2			6196	11.351-11.431
11.488-11.718	L+	462.5	562.5	187.5		1		2	1			4		125	17,437	11.488-11.718
11.903-11.966	L+	300	37.5					1	1			2			4957	11.903-11.966
12.143-12.190	L+	200	50					1	1			2			3718	12.143-12.190
12.228-12.402	L+	212.5	537.5	162.5				2	2			4		120	13,188	12.228-12.402
12.440-12.479	L+	175	25					1	1			2			3010	12.440-12.479
12.522-12.553	L+	137.5	25					1	1			2			2479	12.522-12.553
12.599-12.719	L+	400	200	37.5				1	1			2			9294	12.599-12.719
12.765-12.837	L+	350	25					1	1			2			5488	12.765-12.837
12.847-13.039	L+	325	537.5	150				2	2		4800	4		16	14,604	12.847-13.039
13.131-13.179	L+	187.5		62.5				1	1			2			3718	13.131-13.179
13.284-13.344	L+		312.5		25			1	1			2			4514	13.284-13.344
13.388-13.575	L+	237.5	712.5	37.5				2				2			14,250	13.388-13.575
13.778-13.833	L+	287.5			25		1		1			2			4160	13.778-13.833
13.870-13-940	L+	337.5	37.5		25			2				2			5488	13.870-13-940
13.994-14.102	L+	475	87.5	12.5			1	1				2			8409	13.994-14.102
14.143-14.270	L+	275	325	75				2				2			9825	14.143-14.270
14.376	L+			150					1						2213	14.376
14.492-14.805	L+	1337.5	275	37.5				1	1	12.5		2			23,632	14.492-14.805
14.998-15.061	L+		337.5	37.5				1	1			2			5488	14.998-15.061
15.165-15.323	L+		687.5	150					2						12,038	15.165-15.323
15.329-15.510	L+	550	150	250				3	1			4			13,719	15.329-15.510
15.555-15.570	L+		75					1	1			2			1151	15.555-15.570
15.590-15.642	L+		250	25					1				1		4072	15.590-15.642
15.666-15.800	L+		612.5	100					1						10,267	15.666-15.800
	TOTAL	8000	8012.5	1850		2	2	32	31	12.5	4800	60		430	258,723	

SUMMARY OF QUANTITIES
Q-1

REVISED BY | DATE REVISED
SCOTT GREGORY | KARLIE SMITH
CALCULATED-DESIGNED BY | CHECKED BY
FUNCTIONAL SUPERVISOR | MICHAEL CONNER

STATE OF CALIFORNIA - DEPARTMENT OF TRANSPORTATION
Caltrans® MAINTENANCE

\\st02caddm02\cadd\proj3\02\1h020_plans\pse\21h020pa001.dgn

LAST REVISION 11-30-15 | DATE PLOTTED => 09-FEB-2016 | TIME PLOTTED => 16:04

Dist	COUNTY	ROUTE	POST MILES TOTAL PROJECT	SHEET No.	TOTAL SHEETS
02	Tri	36	R9.2/15.8	14	25

Scott C. Gregory 11-30-15
REGISTERED CIVIL ENGINEER DATE

11-30-15
PLANS APPROVAL DATE

REGISTERED PROFESSIONAL ENGINEER
SCOTT C. GREGORY
No. C75565
Exp. 06-30-16
CIVIL
STATE OF CALIFORNIA

THE STATE OF CALIFORNIA OR ITS OFFICERS OR AGENTS SHALL NOT BE RESPONSIBLE FOR THE ACCURACY OR COMPLETENESS OF SCANNED COPIES OF THIS PLAN SHEET.

NOTES:

1. (N) - NOT A SEPARATE PAY ITEM, FOR INFORMATION ONLY.
2. POST MILES WERE MEASURED FROM THE MILEPOST MARKERS IN THE INCREASING DIRECTION.

HMA QUANTITIES

POST MILE LIMITS	(N) LENGTH	(N) WIDTH	HOT MIX ASPHALT (TYPE A)	TACK COAT
PM - PM	LF	LF	TON	TON
R9.21-R9.23	95	43-44		
R9.23-R9.25	111	44-36		
R9.25-R9.28	153	36-37		
R9.28-R9.28	26	37-61		
R9.28-R9.29	42	61-73		
10.08-10.10	90	73-110		
10.10-10.10	26	110-109		
10.10-10.11	32	109-103		
10.11-10.11	32	103-68		
10.11-10.14	116	68-82		
10.14-10.16	106	82-48		
10.16-10.18	121	48-31		
10.18-10.50	1695	31-30		
10.50-11.00	2640	30-33		
11.00-11.07	354	33-31		
11.07-11.11	206	31-46		
11.11-11.15	232	46-32		
11.15-11.50	1848	32-33		
11.50-12.00	2640	33-32		
12.00-12.68	3590	32-32		
12.68-12.74	317	32-43	7500	32.4
12.74-12.79	285	43-33		
12.79-13.00	1088	33-30		
13.00-13.54	2862	30-30		
13.54-13.57	153	30-32		
13.57-13.61	185	32-43		
13.61-13.71	544	43-43		
13.71-13.73	127	43-32		
13.73-14.09	1870	32-30		
14.09-14.56	2519	30-30		
14.56-14.79	1200	30-28		
14.79-14.82	165	28-40		
14.82-14.98	819	40-40		
14.98-14.99	67	40-28		
14.99-15.29	1597	28-30		
15.29-15.32	119	30-40		
15.32-15.33	88	40-40		
15.33-15.34	62	40-29		
15.34-15.51	871	29-28		
15.51-15.53	129	28-38		
15.53-15.56	144	38-28		
15.56-15.62	335	28-30		
15.62-15.64	98	30-40		
15.64-15.67	165	40-30		
15.67-15.80	680	30-30		
ROUTE CONNECTIONS			356	3
DIKE			126	
		TOTAL	7982	35.4

SHOULDER BACKING QUANTITIES

POST MILE LIMITS (RIGHT SIDE)	(N) LENGTH	SHOULDER BACKING
PM - PM	LF	TON
R9.21-R9.29	412	
10.08-10.55	2482	
10.60-10.64	190	
10.73-10.74	53	
10.91-10.95	222	
10.97-10.98	58	
11.04-11.27	1209	
11.37-11.41	211	
11.56-11.58	153	
11.63-11.65	121	
11.67-11.71	201	
11.76-11.82	280	
11.91-11.95	216	
12.05-12.07	84	
12.15-12.19	190	
12.23-12.27	180	
12.32-12.35	158	
12.45-12.48	158	421
12.53-12.55	111	
12.61-12.65	174	
12.76-12.81	253	
12.94-12.98	164	
13.07-13.11	211	
13.14-13.17	121	
13.21-13.27	317	
13.39-13.58	972	
13.70-13.73	132	
13.78-13.85	401	
13.88-13.93	253	
14.10-14.13	127	
14.24-14.24	37	
14.37-14.38	69	
14.40-14.41	37	
14.41-14.42	37	
14.56-14.62	301	
14.78-15.16	1985	
15.38-15.40	106	
15.70-15.73	137	
POST MILE LIMITS (LEFT SIDE)	(N) LENGTH	
PM - PM	LF	
R9.28-R9.29	69	1017
10.08-15.80	30,202	
ROUTE CONNECTIONS		27
	TOTAL	1465

FOG SEAL QUANTITIES

POST MILE LIMITS	(N) LENGTH	(N) WIDTH	ASPHALTIC EMULSION (FOG SEAL COAT)
PM - PM	LF	LF	TON
10.55-10.60	275		
10.64-10.73	502		
10.74-10.91	887		
10.95-10.97	90		
10.98-11.04	301		
11.27-11.37	544		
11.41-11.56	766		
11.58-11.63	227		
11.65-11.67	127		
11.71-11.76	264		
11.82-11.91	507		
11.95-12.05	512		
12.07-12.15	444		
12.19-12.23	248		
12.27-12.32	285		
12.35-12.45	523		
12.48-12.53	264		
12.55-12.61	327	Var 2-3	1.5
12.65-12.76	612		
12.81-12.94	713		
12.98-13.07	486		
13.11-13.14	185		
13.17-13.21	211		
13.27-13.39	681		
13.58-13.70	665		
13.73-13.78	243		
13.85-13.88	174		
13.93-14.10	903		
14.13-14.24	570		
14.24-14.37	660		
14.38-14.40	95		
14.41-14.41	26		
14.42-14.56	755		
14.62-14.78	882		
15.16-15.38	1151		
15.40-15.70	1610		
15.73-15.80	375		
		TOTAL	1.5

SUMMARY OF QUANTITIES
Q-2

REVISED BY	DATE REVISED
SCOTT GREGORY	KARLIE SMITH
CALCULATED-DESIGNED BY	CHECKED BY
FUNCTIONAL SUPERVISOR	MICHAEL CONNER

STATE OF CALIFORNIA - DEPARTMENT OF TRANSPORTATION
Caltrans® MAINTENANCE

\\st02cadd\proj3\02\1h020_plans\pse\21h020pa002.dgn

LAST REVISION 11-30-15
DATE PLOTTED => 09-FEB-2016
TIME PLOTTED => 16:04

Dist	COUNTY	ROUTE	POST MILES TOTAL PROJECT	SHEET No.	TOTAL SHEETS
02	Tri	36	R9.2/15.8	15	25

REGISTERED CIVIL ENGINEER 11-30-15 DATE

11-30-15
PLANS APPROVAL DATE

REGISTERED PROFESSIONAL ENGINEER SCOTT C. GREGORY No. C75565 Exp. 06-30-16 CIVIL STATE OF CALIFORNIA

THE STATE OF CALIFORNIA OR ITS OFFICERS OR AGENTS SHALL NOT BE RESPONSIBLE FOR THE ACCURACY OR COMPLETENESS OF SCANNED COPIES OF THIS PLAN SHEET.

NOTES:

1. (N) - NOT A SEPARATE PAY ITEM, FOR INFORMATION ONLY.
2. POST MILES WERE MEASURED FROM THE MILEPOST MARKERS IN THE INCREASING DIRECTION.
3. ACTUAL LOCATIONS OF REPLACE ASPHALT CONCRETE SURFACING TO BE DETERMINED BY THE ENGINEER.

COLD PLANE ASPHALT CONCRETE PAVEMENT

POST MILE	(N) LENGTH	(N) WIDTH	AREA	REMARKS
	LF	LF	SQYD	
R9.21	40	43	191	MAINLINE CONFORM TAPER
10.11	8	24	21	ROAD CONNECTION CONFORM TAPER
10.12	8	48	43	ROAD CONNECTION CONFORM TAPER
11.09	8	40	36	ROAD CONNECTION CONFORM TAPER
12.57	8	29	26	ROAD CONNECTION CONFORM TAPER
13.80	8	49	44	ROAD CONNECTION CONFORM TAPER
14.35	8	25	22	ROAD CONNECTION CONFORM TAPER
15.80	40	30	133	MAINLINE CONFROM TAPER
		TOTAL	516	

REPLACE ASPHALT CONCRETE SURFACING

POST MILE LIMITS	(N) Approx No. OF DIGOUTS	(N) LENGTH Avg	(N) WIDTH	(N) DEPTH	REPLACE ASPHALT CONCRETE SURFACING
PM - PM		LF	LF	LF	CY
R9.20-R9.29	4	50	4	0.33	10
10.08-10.50	12	50	4	0.33	30
10.50-11.50	12	50	12	0.25	67
11.50-12.00	16	50	4	0.33	40
12.00-13.00	26	50	4	0.33	64
13.00-14.00	26	50	4	0.33	64
14.00-15.00	26	50	4	0.33	64
15.00-15.80	24	50	4	0.33	59
TOTAL					398

PREPAVING GRINDING DAY

POST MILE LIMITS	EA
R9.21-15.80	5

REMOVE AC DIKE

POST MILE LIMITS (LEFT SIDE)	SIDE	LENGTH
PM - PM		LF
R9.209-R9.277	L+	359
10.455-10.485	L+	158
10.530-10.640	L+	581
10.700-10.786	L+	454
10.910-10.960	L+	264
11.030-11.060	L+	158
11.210-11.280	L+	370
11.370-11.430	L+	317
11.528-11.700	L+	908
11.910-11.966	L+	296
12.132-12.190	L+	306
12.228-12.268	L+	211
12.445-12.479	L+	180
12.528-12.553	L+	132
12.607-12.682	L+	396
12.770-12.837	L+	354
12.915-12.986	L+	375
13.140-13.173	L+	174
13.393-13.438	L+	238
13.780-13.833	L+	280
13.875-13.940	L+	343
14.013-14.102	L+	470
14.206-14.259	L+	280
14.347-14.371	L+	127
14.538-14.792	L+	1341
15.060-15.165	L+	554
15.340-15.443	L+	544
	TOTAL	10,170

PLACE HMA DIKE (TYPE F)

POST MILE LIMITS (LEFT SIDE)	SIDE	LENGTH
PM - PM		LF
R9.209-R9.277	L+	359
10.455-10.485	L+	158
10.605-10.640	L+	185
10.700-10.786	L+	454
10.910-10.960	L+	264
11.030-11.060	L+	158
11.240-11.280	L+	211
11.370-11.430	L+	317
11.316-11.700	L+	459
11.910-11.966	L+	296
12.152-12.190	L+	201
12.228-12.268	L+	211
12.445-12.479	L+	180
12.528-12.553	L+	132
12.607-12.682	L+	396
12.770-12.837	L+	354
12.925-12.986	L+	322
13.140-13.173	L+	174
13.393-13.438	L+	238
13.780-13.833	L+	280
13.875-13.940	L+	343
14.013-14.102	L+	470
14.206-14.259	L+	280
14.538-14.792	L+	1341
15.340-15.443	L+	544
	TOTAL	8327

PLACE HMA DIKE (TYPE E)

POST MILE LIMITS (LEFT SIDE)	SIDE	LENGTH
PM - PM		LF
15.060-15.165	L+	554
	TOTAL	554

REMOVE OVERSIDE DRAIN

POST MILE	EA
10.603	1
11.598	1
TOTAL	2

WOOD MULCH

	MULCH
LOCATION No.	CY
LOCATION 1 (PM 10.558 TO 10.591)	33
LOCATION 2 (PM 11.193 TO 11.226)	11
LOCATION 3 (PM 11.581 TO 11.613)	41
LOCATION 4 (PM 12.269 TO 12.295)	40
LOCATION 5 (PM 12.887 TO 12.911)	3
TOTAL	128

NOTES:
1. PLACE 4" DEPTH OF MULCH ON DISTURBED SOIL WHERE SHOWN ON THE PLANS.
2. MULCH TYPE MUST BE TREE TRIMMING MULCH.
3. MULCH MUST BE TAMPED DOWN IN PLACE

TEMPORARY FIBER ROLL

POST MILE LIMITS	LF
10.558-10.591	600
11.193-11.226	
11.581-11.613	
12.269-12.295	
12.887-12.911	
TOTAL	600

SUMMARY OF QUANTITIES
Q-3

REVISED BY | DATE REVISED
SCOTT GREGORY | KARLIE SMITH
CALCULATED-DESIGNED BY | CHECKED BY
FUNCTIONAL SUPERVISOR | MICHAEL CONNER

STATE OF CALIFORNIA - DEPARTMENT OF TRANSPORTATION
Caltrans® MAINTENANCE

\\st02caddm02\cadd\proj3\02\1h020_plans\pse\21h020pa003.dgn

LAST REVISION 11-30-15 | DATE PLOTTED => 09-FEB-2016 | TIME PLOTTED => 16:04

M

Maint	MAINTENANCE
Max	MAXIMUM
MB	METAL BEAM
MBB	METAL BEAM BARRIER
MBGR	METAL BEAM GUARD RAILING
Med	MEDIAN
MGS	MIDWEST GUARDRAIL SYSTEM
MH	MANHOLE
Min	MINIMUM
Misc	MISCELLANEOUS
Misc I & S	MISCELLANEOUS IRON AND STEEL
Mkr	MARKER
Mod	MODIFIED,
	MODIFY
Mon	MONUMENT
MP	METAL PLATE
MPGR	METAL PLATE GUARD RAILING
MR	MOVEMENT RATING
MSE	MECHANICALLY STABILIZED EMBANKMENT
Mt	MOUNTAIN, MOUNT
Mtl	MATERIAL
MVP	MAINTENANCE VEHICLE PULLOUT

N

N	NORTH
NB	NORTHBOUND
No.	NUMBER (MUST HAVE PERIOD)
Nos.	NUMBERS (MUST HAVE PERIOD)
NPS	NOMINAL PIPE SIZE
NS	NEAR SIDE
NSP	NEW STANDARD PLAN
NTS	NOT TO SCALE

O

Oblr	OBLITERATE
OC	OVERCROSSING
OD	OUTSIDE DIAMETER
OF	OUTSIDE FACE
OG	ORIGINAL GROUND
OGAC	OPEN GRADED ASPHALT CONCRETE
OGFC	OPEN GRADED FRICTION COURSE
OH	OVERHEAD
OHWM	ORDINARY HIGH WATER MARK
O-O	OUT TO OUT
Opp	OPPOSITE
OSD	OVERSIDE DRAIN

P

p	PAGE
PAP	PERFORATED ALUMINUM PIPE
PB	PULL BOX
PC	POINT OF CURVATURE,
	PRECAST
PCC	POINT OF COMPOUND CURVE,
	PORTLAND CEMENT CONCRETE
PCMS	PORTABLE CHANGEABLE MESSAGE SIGN
PCP	PERFORATED CONCRETE PIPE,
	PRESTRESSED CONCRETE PIPE
PCVC	POINT OF COMPOUND VERTICAL CURVE
PEC	PERMIT TO ENTER AND CONSTRUCT
Ped	PEDESTRIAN
Ped OC	PEDESTRIAN OVERCROSSING
Ped UC	PEDESTRIAN UNDERCROSSING
Perm Mtl	PERMEABLE MATERIAL

P continued

PG	PROFILE GRADE
PI	POINT OF INTERSECTION
PJP	PARTIAL JOINT PENETRATION
Pkwy	PARKWAY
ℙ,PL	PLATE
P/L	PROPERTY LINE
PM	POST MILE,
	TIME FROM NOON TO MIDNIGHT
PN	PAVING NOTCH
POC	POINT OF HORIZONTAL CURVE
POT	POINT OF TANGENT
POVC	POINT OF VERTICAL CURVE
PP	PIPE PILE,
	PLASTIC PIPE,
	POWER POLE
PPL	PREFORMED PERMEABLE LINER
PPP	PERFORATED PLASTIC PIPE
PRC	POINT OF REVERSE CURVE
PRF	PAVEMENT REINFORCING FABRIC
PRVC	POINT OF REVERSE VERTICAL CURVE
PS&E	PLANS, SPECIFICATIONS AND ESTIMATES
PS, P/S	PRESTRESSED
PSP	PERFORATED STEEL PIPE
PT	POINT OF TANGENCY
PVC	POLYVINYL CHLORIDE
Pvmt	PAVEMENT

Q

Qty	QUANTITY

R

R	RADIUS
R & D	REMOVE AND DISPOSE
R & S	REMOVE AND SALVAGE
R/C	RATE OF CHANGE
RCA	REINFORCED CONCRETE ARCH
RCB	REINFORCED CONCRETE BOX
RCP	REINFORCED CONCRETE PIPE
RCPA	REINFORCED CONCRETE PIPE ARCH
Rd	ROAD
Reinf	REINFORCED,
	REINFORCEMENT,
	REINFORCING
Rel	RELOCATE
Repl	REPLACEMENT
Ret	RETAINING
Rev	REVISED, REVISION
Rdwy	ROADWAY
RHMA	RUBBERIZED HOT MIX ASPHALT
Riv	RIVER
RM	ROAD-MIXED
RP	RADIUS POINT,
	REFERENCE POINT
RR	RAILROAD
RSP	ROCK SLOPE PROTECTION,
	REVISED STANDARD PLAN
Rt	RIGHT
Rte	ROUTE
RW	REDWOOD,
	RETAINING WALL
R/W	RIGHT OF WAY
Rwy	RAILWAY

S

S	SOUTH,
	SUPPLEMENT
SAE	STRUCTURE APPROACH EMBANKMENT
Salv	SALVAGE
SAPP	STRUCTURAL ALUMINUM PLATE PIPE
SB	SOUTHBOUND
SC	SAND CUSHION
SCSP	SLOTTED CORRUGATED STEEL PIPE
SD	STORM DRAIN
Sec	SECOND,
	SECTION
Sep	SEPARATION
SG	SUBGRADE
Shld	SHOULDER
Sht	SHEET
Sim	SIMILAR
℄	STATION LINE
SM	SELECTED MATERIAL
Spec	SPECIAL,
	SPECIFICATIONS
SPP	SLOTTED PLASTIC PIPE
SS	SLOPE STAKE
SSBM	STRAP AND SADDLE BRACKET METHOD
SSD	STRUCTURAL SECTION DRAIN
SSPA	STRUCTURAL STEEL PLATE ARCH
SSPP	STRUCTURAL STEEL PLATE PIPE
SSPPA	STRUCTURAL STEEL PLATE PIPE ARCH
SSRP	STEEL SPIRAL RIB PIPE
St	STREET
Sta	STATION
STBB	SINGLE THRIE BEAM BARRIER
Std	STANDARD
Str	STRUCTURE
Surf	SURFACING
SW	SIDEWALK,
	SOUND WALL
Swr	SEWER
Sym	SYMMETRICAL
S4S	SURFACE 4 SIDES

T

T	SEMI-TANGENT
Tan	TANGENT
TBB	THRIE BEAM BARRIER
Tbr	TIMBER
TC	TOP OF CURB
TCB	TRAFFIC CONTROL BOX
TCE	TEMPORARY CONSTRUCTION EASEMENT
Tel	TELEPHONE
Temp	TEMPORARY
TG	TOP OF GRADE
Tot	TOTAL
TP	TELEPHONE POLE
TPB	TREATED PERMEABLE BASE
TPM	TREATED PERMEABLE MATERIAL
Trans	TRANSITION

T continued

TS	TRANSVERSE,
	TRAFFIC SIGNAL,
	TUBULAR STEEL
Typ	TYPICAL

U

UC	UNDERCROSSING
UD	UNDERDRAIN
UG	UNDERGROUND
UON	UNLESS OTHERWISE NOTED
UP	UNDERPASS

V

V	VALVE,
	DESIGN SPEED
Var	VARIABLE,
	VARIES
VC	VERTICAL CURVE
VCP	VITRIFIED CLAY PIPE
Vert	VERTICAL
Via	VIADUCT
Vol	VOLUME

W

W	WEST,
	WIDTH
WB	WESTBOUND
WH	WEEP HOLE
WM	WIRE MESH
WS	WATER SURFACE
WSP	WELDED STEEL PIPE
Wt	WEIGHT
WV	WATER VALVE
WW	WINGWALL
WWLOL	WINGWALL LAYOUT LINE

X

X Sec	CROSS SECTION
Xing	CROSSING

Y

Yr	YEAR
Yrs	YEARS

Dist	COUNTY	ROUTE	POST MILES TOTAL PROJECT	SHEET No.	TOTAL SHEETS
02	Tri	36	R9.2/15.8	16	25

Grace M. Tsushima
REGISTERED CIVIL ENGINEER

July 19, 2013
PLANS APPROVAL DATE

REGISTERED PROFESSIONAL ENGINEER Grace M. Tsushima No. C49814 Exp. 9-30-14 CIVIL STATE OF CALIFORNIA

THE STATE OF CALIFORNIA OR ITS OFFICERS OR AGENTS SHALL NOT BE RESPONSIBLE FOR THE ACCURACY OR COMPLETENESS OF SCANNED COPIES OF THIS PLAN SHEET.

TO ACCOMPANY PLANS DATED 11-30-15

UNIT OF MEASUREMENT SYMBOLS:

Some of the symbols used in the project plan quantity tables and in the Bid Item List are:

TABLE A

SYMBOL USED	DEFINITIONS
ACRE	ACRE
CF	CUBIC FOOT
CY	CUBIC YARD
EA	EACH
GAL	GALLON
LB	POUND
LF	LINEAR FOOT
SQFT	SQUARE FOOT
SQYD	SQUARE YARD
STA	100 FEET
TAB	TABLET
TON	2,000 POUNDS

Some of the symbols used in the plans other than in the project plan quantity tables are:

TABLE B

SYMBOL USED	DEFINITIONS
ksi	KIPS PER SQUARE INCH
ksf	KIPS PER SQUARE FOOT
psi	POUNDS PER SQUARE INCH
psf	POUNDS PER SQUARE FOOT
lb/ft^3, pcf	POUNDS PER CUBIC FOOT
tsf	TONS PER SQUARE FOOT
mph, MPH *	MILES PER HOUR
ø	NOMINAL DIAMETER
oz	OUNCE
lb	POUND
kip	1,000 POUNDS
cal	CALORIE
ft	FOOT OR FEET
gal	GALLON

* For use on a sign panel only

STATE OF CALIFORNIA
DEPARTMENT OF TRANSPORTATION

ABBREVIATIONS (SHEET 2 OF 2)

NO SCALE

RSP A10B DATED JULY 19, 2013 SUPERSEDES STANDARD PLAN A10B DATED MAY 20, 2011 - PAGE 2 OF THE STANDARD PLANS BOOK DATED 2010.

REVISED STANDARD PLAN RSP A10B

2010 REVISED STANDARD PLAN RSP A10B

DATE PLOTTED => 09-FEB-2016
TIME PLOTTED => 16:04

Dist	COUNTY	ROUTE	POST MILES TOTAL PROJECT	SHEET No.	TOTAL SHEETS
02	Tri	36	R9.2/15.8	17	25

REGISTERED CIV. ENGINEER

July 20, 2012
PLANS APPROVAL DATE

Roberta L. McLaughlin No. C40375 Exp. 3-31-13 CIVIL — REGISTERED PROFESSIONAL ENGINEER — STATE OF CALIFORNIA

THE STATE OF CALIFORNIA OR ITS OFFICERS OR AGENTS SHALL NOT BE RESPONSIBLE FOR THE ACCURACY OR COMPLETENESS OF SCANNED COPIES OF THIS PLAN SHEET.

TO ACCOMPANY PLANS DATED 11-30-15

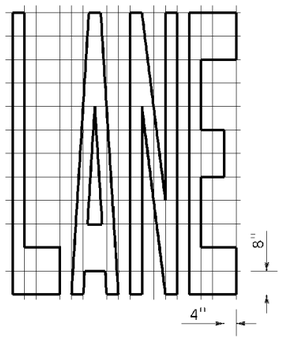

A=24 ft²

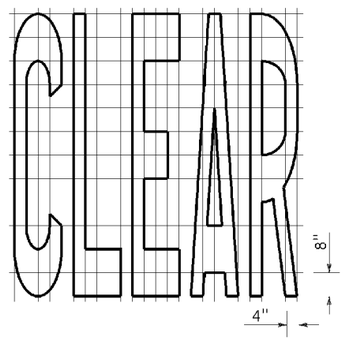

A=27 ft²

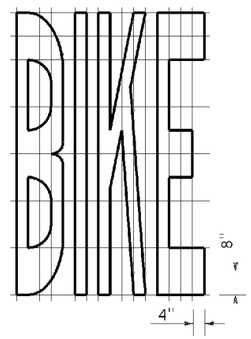

A=21 ft²

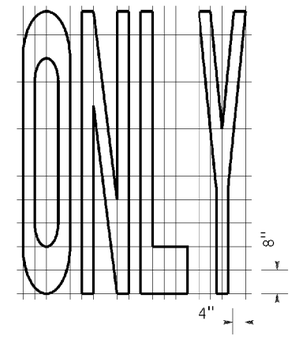

A=22 ft²

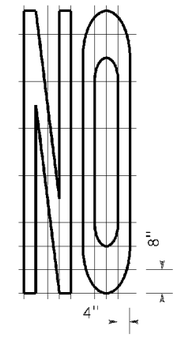

A=14 ft²

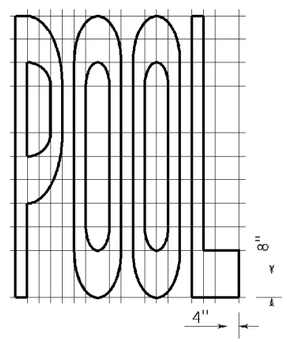

A=23 ft²

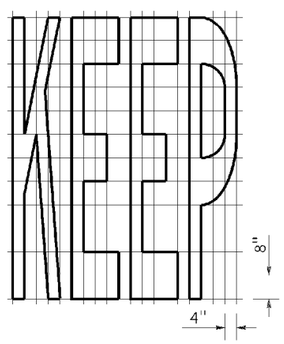

A=24 ft²

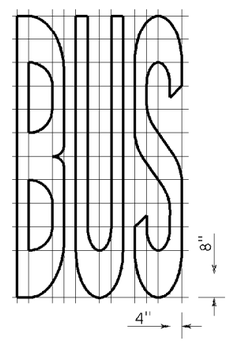

A=20 ft²

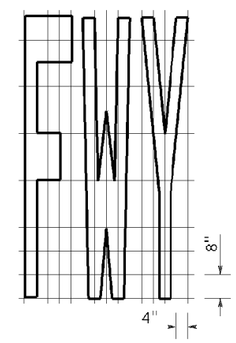

A=16 ft²

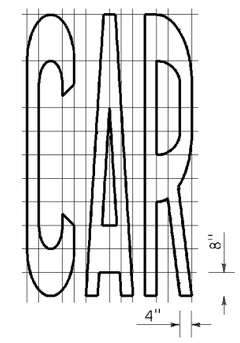

A=17 ft²

WORD MARKINGS			
ITEM	ft²	ITEM	ft²
LANE	24	NO	14
POOL	23	BIKE	21
CAR	17	BUS	20
CLEAR	27	ONLY	22
KEEP	24	FWY	16

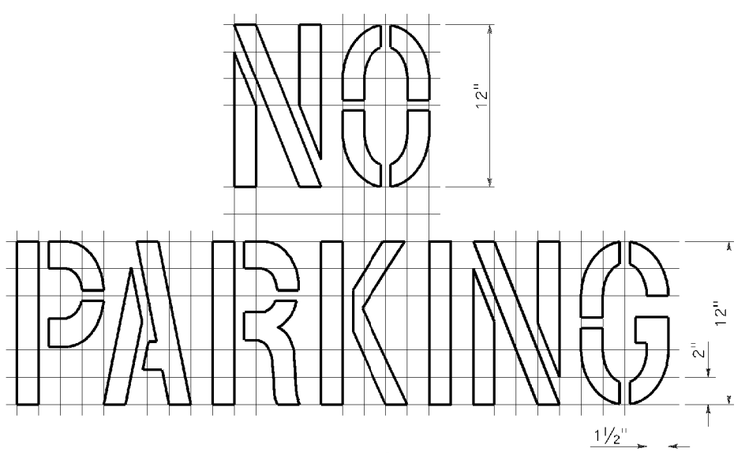

A=2 ft²
See Notes 6 and 7

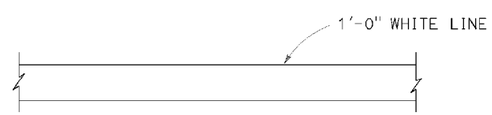

LIMIT LINE (STOP LINE)

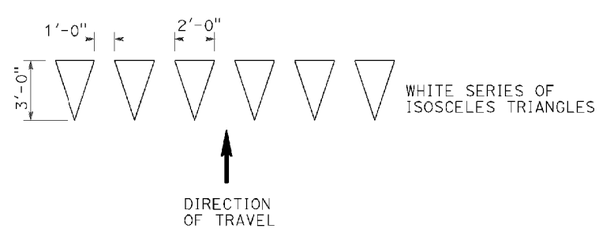

YIELD LINE

NOTES:

1. If a message consists of more than one word, it should read "UP", i.e., the first word should be nearest the driver.
2. The space between words should be at least four times the height of the characters for low speed roads, but not more than ten times the height of the characters. The space may be reduced appropriately where there is limited space because of local conditions.
3. Minor variations in dimensions may be accepted by the Engineer.
4. Portions of a letter, number or symbol may be separated by connecting segments not to exceed 2" in width.
5. The words "NO PARKING" pavement marking is to be used for parking facilities. For typical locations of markings, see Standard Plans A90A and A90B.
6. The words "NO PARKING", shall be painted in white letters no less than 1'-0" high on a contrasting background and located so that it is visible to traffic enforcement officials.

STATE OF CALIFORNIA
DEPARTMENT OF TRANSPORTATION

PAVEMENT MARKINGS WORDS, LIMIT AND YIELD LINES

NO SCALE

RSP A24E DATED JULY 20, 2012 SUPERSEDES STANDARD PLAN A24E DATED MAY 20, 2011 - PAGE 17 OF THE STANDARD PLANS BOOK DATED 2010.

REVISED STANDARD PLAN RSP A24E

2010 REVISED STANDARD PLAN RSP A24E

DATE PLOTTED => 09-FEB-2016
TIME PLOTTED => 16:04

Dist	COUNTY	ROUTE	POST MILES TOTAL PROJECT	SHEET No.	TOTAL SHEETS
02	Tri	36	R9.2/15.8	18	25

Randell D. Hiatt
REGISTERED CIVIL ENGINEER

July 19, 2013
PLANS APPROVAL DATE

THE STATE OF CALIFORNIA OR ITS OFFICERS OR AGENTS SHALL NOT BE RESPONSIBLE FOR THE ACCURACY OR COMPLETENESS OF SCANNED COPIES OF THIS PLAN SHEET.

REGISTERED PROFESSIONAL ENGINEER Randell D. Hiatt No. C50200 Exp. 6-30-15 CIVIL STATE OF CALIFORNIA

TO ACCOMPANY PLANS DATED 11-30-15

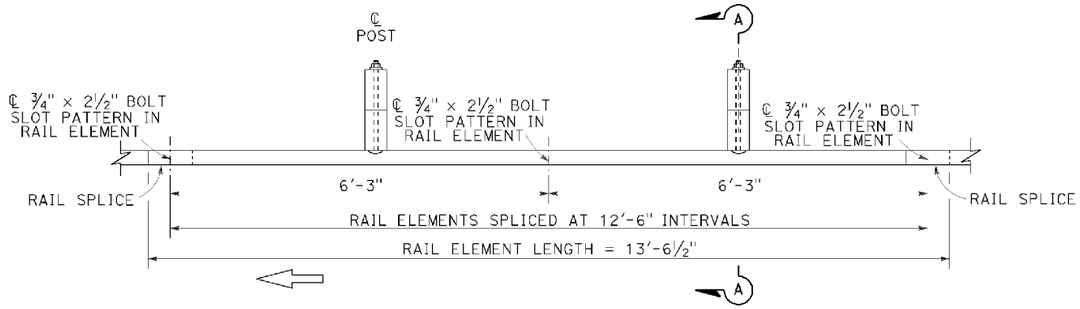

PLAN

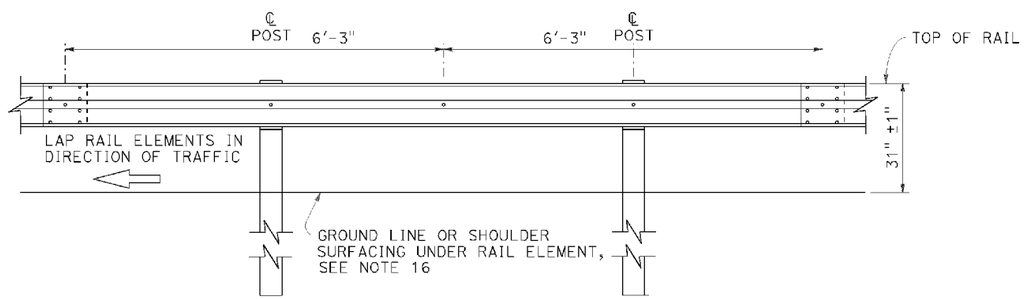

ELEVATION

MIDWEST GUARDRAIL SYSTEM WITH WOOD POST AND BLOCKS

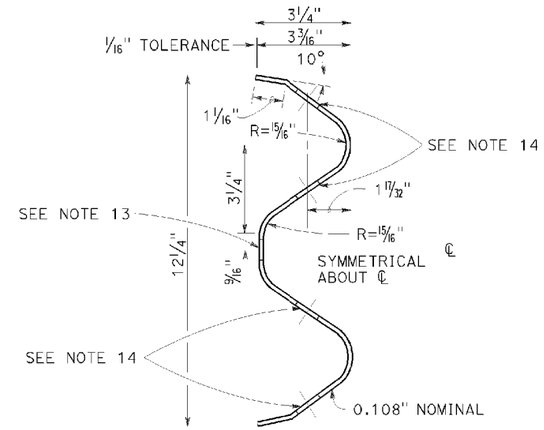

SECTION THRU RAIL ELEMENT

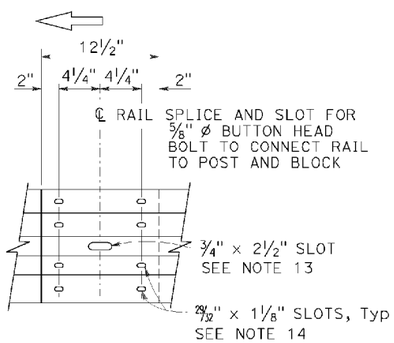

ELEVATION

RAIL ELEMENT SPLICE DETAIL

a) Connect the over lapped end of the rail elements with ⅝" ø × 1⅜" button head oval shoulder splice bolts inserted into the ²⁹⁄₃₂" × 1⅛" slots and bolted together with ⅝" ø recessed hex nuts. Recess of hex nut points toward rail element. A total of 8 bolts and nuts are to be used at each rail splice connection.

b) The ends of the rail elements are to be overlapped in the direction of traffic (see details).

c) Where end cap is to be attached to the end of a rail element, a total of 4 of the above described splice bolts and nuts are to be used.

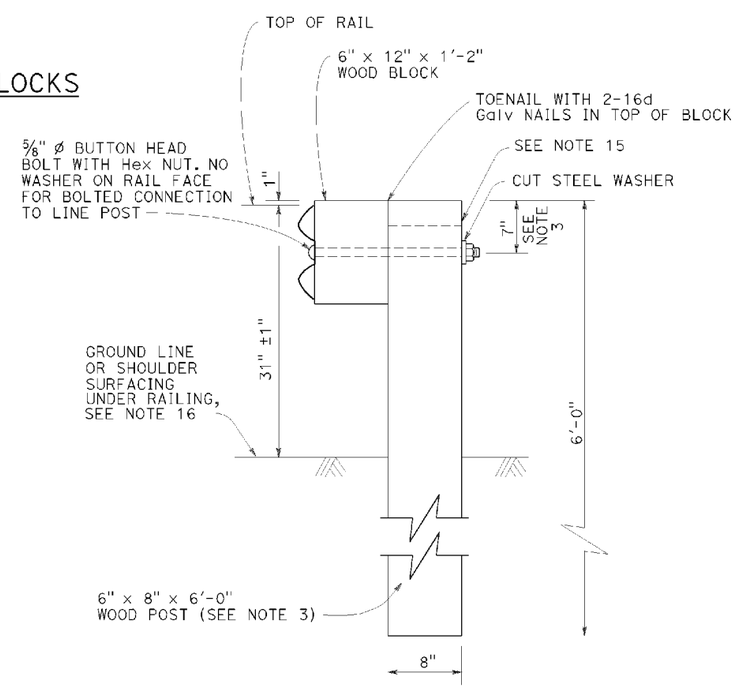

SECTION A-A

TYPICAL WOOD LINE POST INSTALLATION

See Note 4

NOTES:

1. For details of steel post installations, see Revised Standard Plan RSP A77L2.
2. For details of standard hardware used to construct MGS, see Revised Standard Plan RSP A77M1.
3. For details of wood posts and wood blocks used to construct MGS, see Revised Standard Plan RSP A77N1.
4. For additional installation details, see Revised Standard Plan RSP A77N3.
5. MGS post spacing to be 6'-3" center to center, except as otherwise noted.
6. For MGS typical layouts, see the A77P, A77Q and A77R Series of Standard Plans.
7. If railing is connected to terminal system end treatment, use 31" height terminal system end treatment.
8. For MGS end anchor details, see Revised Standard Plans RSP A77S1 and RSP A77T2.
9. For details of MGS transition to bridge railing, see Revised Standard Plan RSP A77U4.
10. For additional details of MSG connection to bridge railing, see Revised Standard Plans RSP A77U1, RSP A77U2 and RSP A77V1.
11. For MGS connection details to abutments and walls, see Revised Standard Plan RSP A77U3.
12. For typical MGS delineation and dike positioning details, see Revised Standard Plan RSP A77N4.
13. Slotted hole for bolted connection of rail element to block and post. See "Section Thru Rail Element".
14. Slotted holes for splice bolts to overlap ends of rail element. See "Section Thru Rail Element".
15. Additional hole in uppermost portion of line post is for potential future adjustments of railing height. See Revised Standard Plan RSP A77N1.
16. Install posts in soil.

STATE OF CALIFORNIA
DEPARTMENT OF TRANSPORTATION

MIDWEST GUARDRAIL SYSTEM STANDARD RAILING SECTION (WOOD POST WITH WOOD BLOCK)

NO SCALE

RSP A77L1 DATED JULY 19, 2013 SUPPLEMENTS STANDARD PLANS BOOK DATED 2010.

REVISED STANDARD PLAN RSP A77L1

2010 REVISED STANDARD PLAN RSP A77L1

DATE PLOTTED => 09-FEB-2016
TIME PLOTTED => 16:04

Dist	COUNTY	ROUTE	POST MILES TOTAL PROJECT	SHEET No.	TOTAL SHEETS
02	Tri	36	R9.2/15.8	19	25

Randell D. Hiatt
REGISTERED CIVIL ENGINEER

July 19, 2013
PLANS APPROVAL DATE

THE STATE OF CALIFORNIA OR ITS OFFICERS OR AGENTS SHALL NOT BE RESPONSIBLE FOR THE ACCURACY OR COMPLETENESS OF SCANNED COPIES OF THIS PLAN SHEET.

REGISTERED PROFESSIONAL ENGINEER Randell D. Hiatt No. C50200 Exp. 6-30-15 CIVIL STATE OF CALIFORNIA

TO ACCOMPANY PLANS DATED 11-30-15

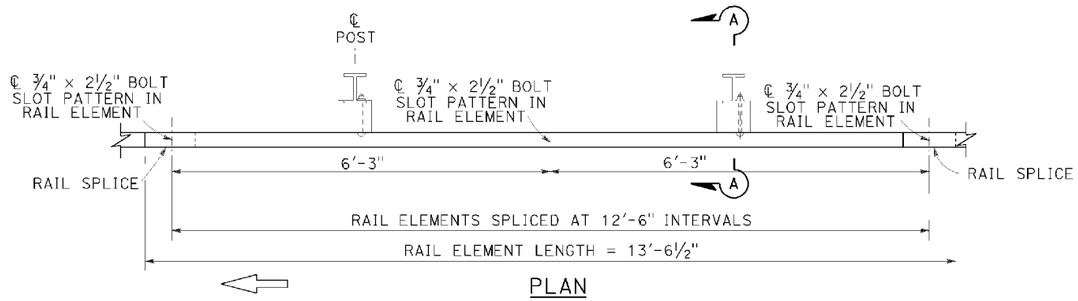

PLAN

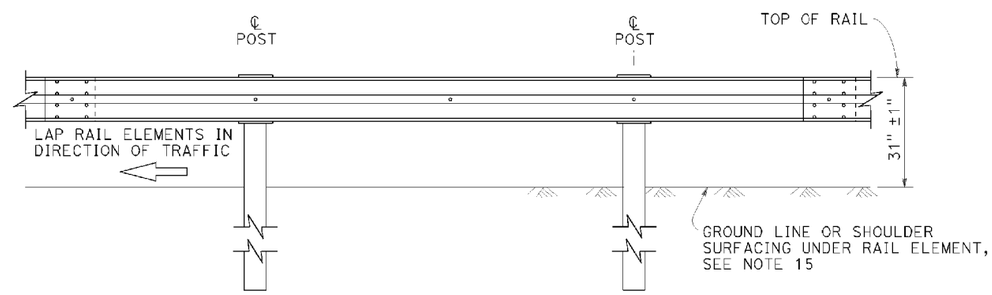

ELEVATION

MIDWEST GUARDRAIL SYSTEM WITH STEEL POSTS AND NOTCHED WOOD OR NOTCHED RECYCLED PLASTIC BLOCKS

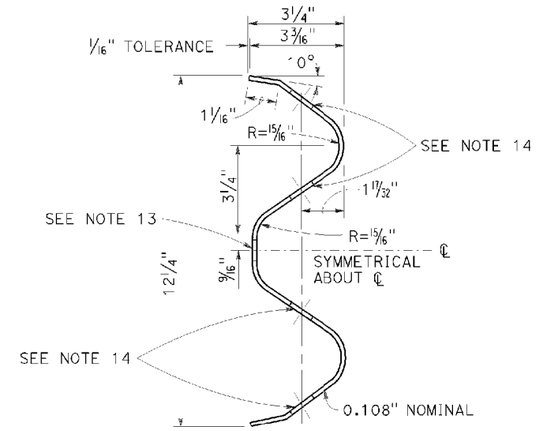

SECTION THRU RAIL ELEMENT

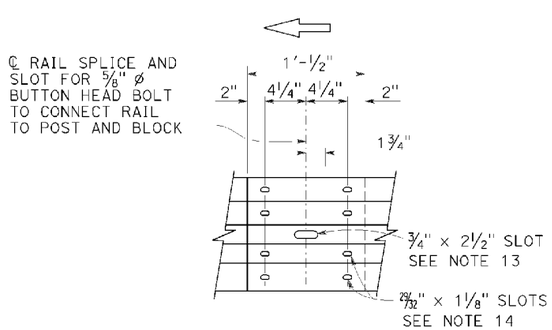

ELEVATION

RAIL ELEMENT SPLICE DETAIL

a) Connect the over lapped end of the rail elements with 5/8" ø × 1 3/8" button head oval shoulder splice bolts inserted into the 29/32" × 1 1/8" slots and bolted together with 5/8" ø recessed hex nuts. Recess of hex nut points toward rail element. A total of 8 bolts and nuts are to be used at each rail splice connection.

b) The ends of the rail elements are to be overlapped in the direction of traffic (see details).

c) Where end cap is to be attached to the end of a rail element, a total of 4 of the above described splice bolts and nuts are to be used.

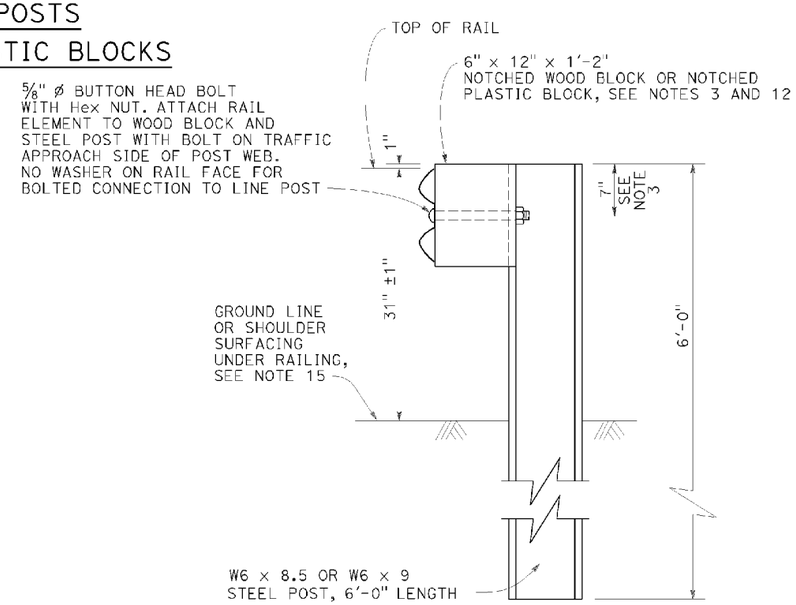

SECTION A-A

TYPICAL STEEL LINE POST INSTALLATION

See Note 4

NOTES:

1. For details of wood post installations, see Revised Standard Plan RSP A77L1.
2. For details of standard hardware used to construct MGS, see Revised Standard Plan RSP A77M1.
3. For details of steel posts and notched wood blocks usec to construct MGS, see Revised Standard Plan RSP A77N2.
4. For additional installation details, see Revised Standard Plan RSP A77N3.
5. MGS post spacing to be 6'-3" center to center, except as otherwise noted.
6. For MGS typical layouts, see the A77P, A77Q and A77R Series of Standard Plans.
7. If railing is connected to terminal system end treatment, use 31" height terminal system end treatment.
8. For MGS end anchor details, see Revised Standard Plans RSP A77S1 and RSP A77T2.
9. For details of MGS transition to bridge railing, see Revised Standard Plan RSP A77U4.
10. For additional details of MGS connection to bridge railings, see Revised Standard Plans RSP A77U1, RSP A77U2 and RSP A77V1.
11. For dike positioning and MGS delineation details, see Revised Standard Plan RSP A77N4.
12. Notched face of block faces steel post.
13. Slotted hole for bolted connection of rail element to block and post. See "Section Thru Rail Element".
14. Slotted holes for splice bolts to overlap ends of rail element. See "Section Thru Rail Element".
15. Install posts in soil.

STATE OF CALIFORNIA
DEPARTMENT OF TRANSPORTATION

MIDWEST GUARDRAIL SYSTEM STANDARD RAILING SECTION (STEEL POST WITH NOTCHED WOOD OR NOTCHED RECYCLED PLASTIC BLOCK)

NO SCALE

RSP A77L2 DATED JULY 19, 2013 SUPPLEMENTS THE STANDARD PLANS BOOK DATED 2010.

REVISED STANDARD PLAN RSP A77L2

2010 REVISED STANDARD PLAN RSP A77L2

DATE PLOTTED => 09-FEB-2016
TIME PLOTTED => 16:04

Dist	COUNTY	ROUTE	POST MILES TOTAL PROJECT	SHEET No.	TOTAL SHEETS
02	Tri	36	R9.2/15.8	20	25

Randell D. Hiatt
REGISTERED CIVIL ENGINEER

July 19, 2013
PLANS APPROVAL DATE

REGISTERED PROFESSIONAL ENGINEER
Randell D. Hiatt
No. C50200
Exp. 6-30-15
CIVIL
STATE OF CALIFORNIA

THE STATE OF CALIFORNIA OR ITS OFFICERS OR AGENTS SHALL NOT BE RESPONSIBLE FOR THE ACCURACY OR COMPLETENESS OF SCANNED COPIES OF THIS PLAN SHEET.

TO ACCOMPANY PLANS DATED 11-30-15

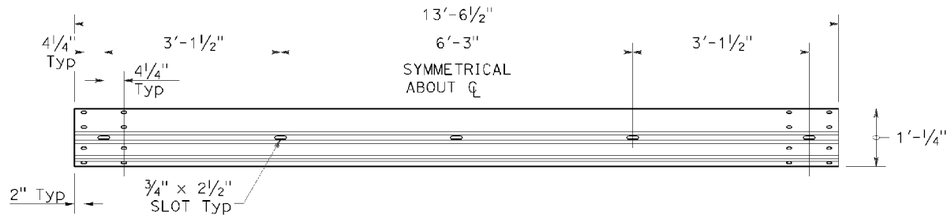

TYPICAL RAIL ELEMENT

NOTE:

1. Slotted holes for splice bolts to overlap ends of rail element.

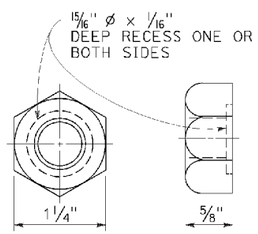

⅝" Ø RECESS NUT

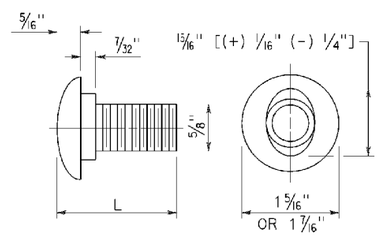

⅝" Ø BUTTON HEAD BOLT

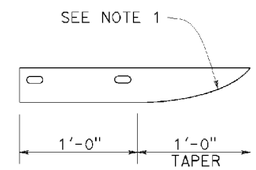

PLAN

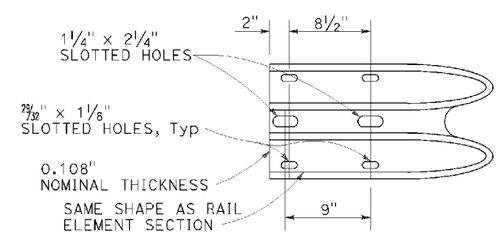

ELEVATION

END CAP
(TYPE A)

BUTTON HEAD BOLT

L	THREAD LENGTH
1⅜"	FULL THREAD LENGTH
2"	FULL THREAD LENGTH
10"	4" Min THREAD LENGTH
18"	4" Min THREAD LENGTH
20"	4" Min THREAD LENGTH
22"	4" Min THREAD LENGTH
26"	4" Min THREAD LENGTH
36"	4" Min THREAD LENGTH
** 2¾"	2" Min THREAD LENGTH
** 19"	4" Min THREAD LENGTH

** For nested rail applications.

STATE OF CALIFORNIA
DEPARTMENT OF TRANSPORTATION

MIDWEST GUARDRAIL SYSTEM STANDARD HARDWARE

NO SCALE

RSP A77M1 DATED JULY 19, 2013 SUPPLEMENTS THE STANDARD PLANS BOOK DATED 2010.

REVISED STANDARD PLAN RSP A77M1

2010 REVISED STANDARD PLAN RSP A77M1

DATE PLOTTED => 09-FEB-2016
TIME PLOTTED => 16:04

Dist	COUNTY	ROUTE	POST MILES TOTAL PROJECT	SHEET No.	TOTAL SHEETS
02	Tri	36	R9.2/15.8	21	25

Randell D. Hiatt
REGISTERED CIVIL ENGINEER

July 19, 2013
PLANS APPROVAL DATE

REGISTERED PROFESSIONAL ENGINEER Randell D. Hiatt No. C50200 Exp. 6-30-15 CIVIL STATE OF CALIFORNIA

THE STATE OF CALIFORNIA OR ITS OFFICERS OR AGENTS SHALL NOT BE RESPONSIBLE FOR THE ACCURACY OR COMPLETENESS OF SCANNED COPIES OF THIS PLAN SHEET.

TO ACCOMPANY PLANS DATED 11-30-15

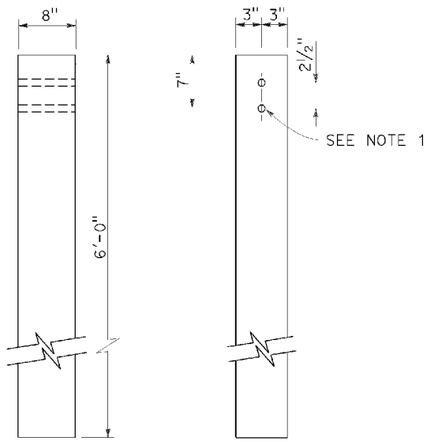

SIDE FRONT

6" x 8" WOOD POST
See Note 3

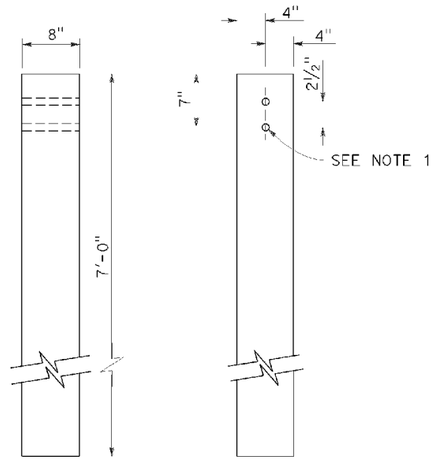

SIDE FRONT

8" x 8" WOOD POST
See Note 4

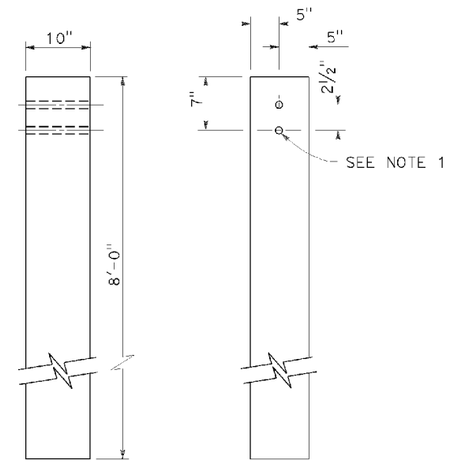

SIDE FRONT

10" x 10" WOOD POST
See Note 5

NOTES:

1. All holes in wood posts and blocks shall be ¾" Dia ± 1/16".
2. Dimensions shown for wood post are nominal.
3. This post and block combination used for standard line post sections of MGS.
4. This post and 8" x 12" block combination used for line post sections of MGS on narrow roadways.
5. This post and 8" x 12" block combination is typically used where strengthened line post sections of MGS are warranted to shield fixed objects.
6. See Revised Standard Plan RSP A77L3 for use of 6" x 8" and 8" x 8" wood blocks.

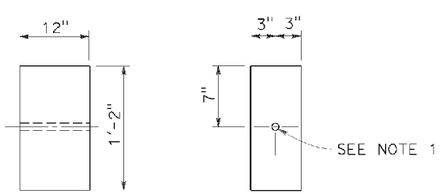

SIDE FRONT

6" x 12" WOOD BLOCK
See Note 3

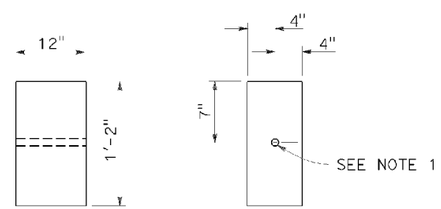

SIDE FRONT

8" x 12" WOOD BLOCK

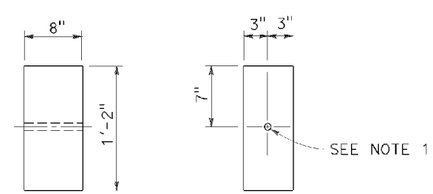

SIDE FRONT

6" x 8" WOOD BLOCK
Only for use with metal beam guard rail see Note 6

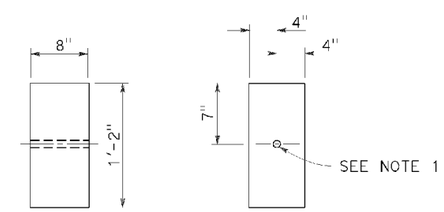

SIDE FRONT

8" x 8" WOOD BLOCK
Only for use with metal beam guard rail see Note 6

STATE OF CALIFORNIA
DEPARTMENT OF TRANSPORTATION

MIDWEST GUARDRAIL SYSTEM WOOD POST AND WOOD BLOCK DETAILS

NO SCALE

RSP A77N1 DATED JULY 19, 2013 SUPPLEMENTS THE STANDARD PLANS BOOK DATED 2010.

REVISED STANDARD PLAN RSP A77N1

2010 REVISED STANDARD PLAN RSP A77N1

DATE PLOTTED => 09-FEB-2016
TIME PLOTTED => 16:04

Dist	COUNTY	ROUTE	POST MILES TOTAL PROJECT	SHEET No.	TOTAL SHEETS
02	Tri	36	R9.2/15.8	22	25

Randell D. Hiatt
REGISTERED CIVIL ENGINEER

November 15, 2013
PLANS APPROVAL DATE

Randell D. Hiatt
No. C50200
Exp. 6-30-15
CIVIL
STATE OF CALIFORNIA
REGISTERED PROFESSIONAL ENGINEER

THE STATE OF CALIFORNIA OR ITS OFFICERS OR AGENTS SHALL NOT BE RESPONSIBLE FOR THE ACCURACY OR COMPLETENESS OF SCANNED COPIES OF THIS PLAN SHEET.

TO ACCOMPANY PLANS DATED 11-30-15

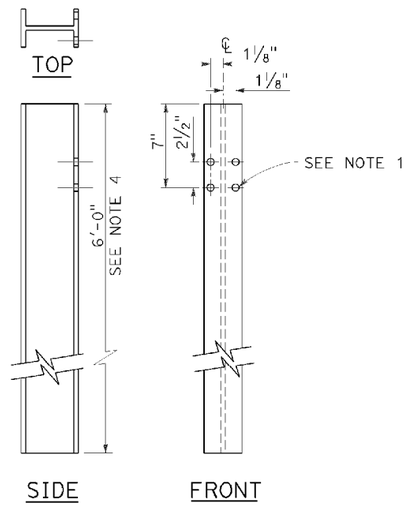

W6 x 9 OR W6 x 8.5
STEEL POST
See Note 4

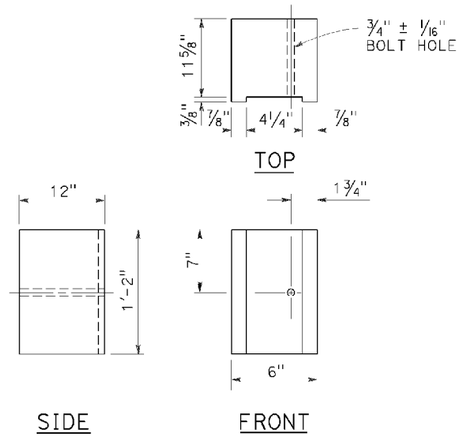

6" x 12"
NOTCHED WOOD BLOCK
See Notes 2 and 3

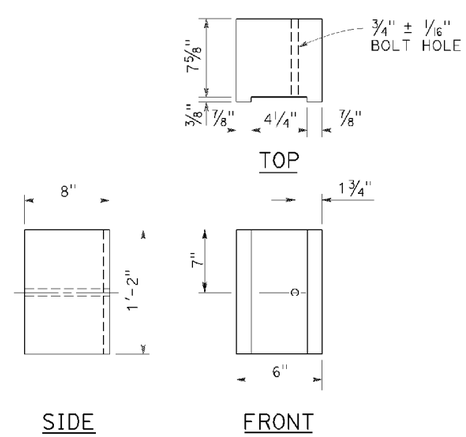

6" x 8"
NOTCHED WOOD BLOCK
Only for use with metal beam guard railing. See Note 5

NOTES:

1. All holes in steel post shall be 13/16" Dia maximum.
2. Dimensions shown for wood block are nominal.
3. Notched face of block faces steel post.
4. 6'-0" length posts to be used for typical roadway installation. See Revised Standard Plan RSP A77N3.
5. See Revised Standard Plan RSP A77L3 for use of 6" x 8" and 8" x 8" notched wood blocks.
6. This post and 8" x 12" block combination to be used for line post sections of MGS on narrow roadways and where strengthened line post sections of MGS are warranted to shield fixed objects.

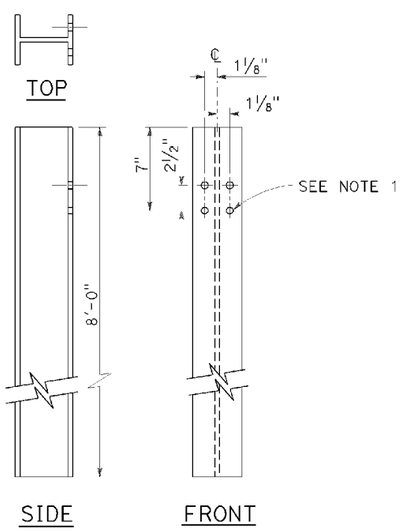

W6 x 15
STEEL POST
See Note 6

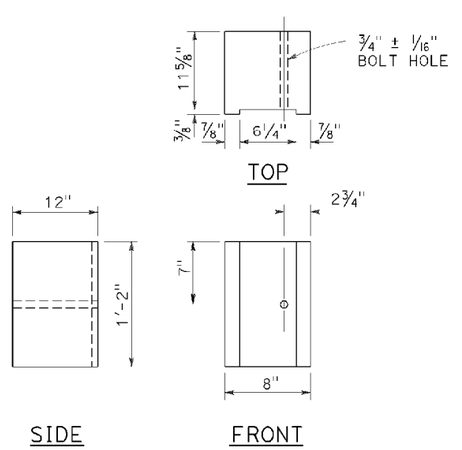

8" x 12"
NOTCHED WOOD BLOCK
See Notes 2 and 3

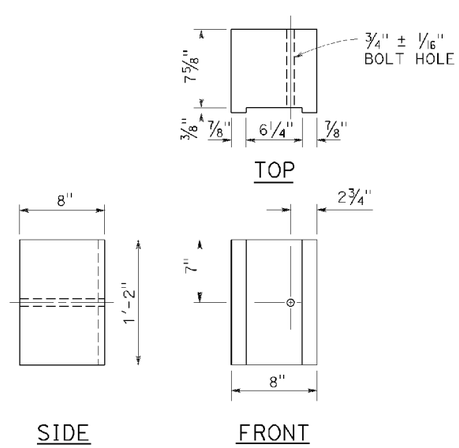

8" x 8"
NOTCHED WOOD BLOCK
Only for use with metal beam guard railing. See Note 5

STATE OF CALIFORNIA
DEPARTMENT OF TRANSPORTATION

MIDWEST GUARDRAIL SYSTEM STEEL POST AND NOTCHED WOOD BLOCK DETAILS

NO SCALE

RSP A77N2 DATED NOVEMBER 15, 2013 SUPERSEDES RSP A77N2
DATED JULY 19, 2013 THAT SUPPLEMENTS THE STANDARD PLANS BOOK DATED 2010.

REVISED STANDARD PLAN RSP A77N2

2010 REVISED STANDARD PLAN RSP A77N2

DATE PLOTTED => 09-FEB-2016
TIME PLOTTED => 16:04

Dist	COUNTY	ROUTE	POST MILES TOTAL PROJECT	SHEET No.	TOTAL SHEETS
02	Tri	36	R9.2/15.8	23	25

REGISTERED CIVIL ENGINEER

July 19, 2013
PLANS APPROVAL DATE

REGISTERED PROFESSIONAL ENGINEER
Gurinderpal Bhullar
No. C48815
Exp. 9-30-14
CIVIL
STATE OF CALIFORNIA

THE STATE OF CALIFORNIA OR ITS OFFICERS OR AGENTS SHALL NOT BE RESPONSIBLE FOR THE ACCURACY OF COMPLETENESS OF SCANNED COPIES OF THIS PLAN SHEET.

TO ACCOMPANY PLANS DATED 11-30-15

2010 REVISED STANDARD PLAN RSP T9

TABLE 1

TAPER LENGTH CRITERIA AND CHANNELIZING DEVICE SPACING

SPEED (S)	MINIMUM TAPER LENGTH * FOR WIDTH OF OFFSET 12 FEET (W)				MAXIMUM CHANNELIZING DEVICE SPACING		
					X	Y	Z **
	TANGENT 2L	MERGING L	SHIFTING L/2	SHOULDER L/3	TAPER	TANGENT	CONFLICT
mph	ft	ft	ft	ft	ft	ft	ft
20	160	80	40	27	20	40	10
25	250	125	63	42	25	50	12
30	360	180	90	60	30	60	15
35	490	245	123	82	35	70	17
40	640	320	160	107	40	80	20
45	1080	540	270	180	45	90	22
50	1200	600	300	200	50	100	25
55	1320	660	330	220	55	110	27
60	1440	720	360	240	60	120	30
65	1560	780	390	260	65	130	32
70	1680	840	420	280	70	140	35

* - For other offsets, use the following merging taper length formula for L:
For speed of 40 mph or less, $L = WS^2/60$
For speed of 45 mph or more, $L = WS$

Where: L = Taper length in feet
W = Width of offset in feet
S = Posted speed limit, off-peak 85th-percentile speed prior to work starting, or the anticipated operating speed in mph

** - Use for taper and tangent sections where there are no pavement markings or where there is a conflict between existing pavement markings and channelizers (CA).

TABLE 2

LONGITUDINAL BUFFER SPACE AND FLAGGER STATION SPACING

SPEED *	Min D **	DOWNGRADE Min D ***		
		-3%	-6%	-9%
mph	ft	ft	ft	ft
20	115	116	120	126
25	155	158	165	173
30	200	205	215	227
35	250	257	271	287
40	305	315	333	354
45	360	378	400	427
50	425	446	474	507
55	495	520	553	593
60	570	598	638	686
65	645	682	728	785
70	730	771	825	891

* - Speed is posted speed limit, off-peak 85th-percentile speed prior to work starting, or the anticipated operating speed in mph

** - Longitudinal buffer space or flagger station spacing

*** - Use on sustained downgrade steeper than -3 percent and longer than 1 mile.

TABLE 3

ADVANCE WARNING SIGN SPACING

ROAD TYPE	DISTANCE BETWEEN SIGNS *		
	A	B	C
	ft	ft	ft
URBAN - 25 mph OR LESS	100	100	100
URBAN - MORE THAN 25 mph TO 40 mph	250	250	250
URBAN - MORE THAN 40 mph	350	350	350
RURAL	500	500	500
EXPRESSWAY / FREEWAY	1000	1500	2640

* - The distances are approximate, are intended for guidance purposes only, and should be applied with engineering judgment. These distances should be adjusted by the Engineer for field conditions, if necessary, by increasing or decreasing the recommmended distances.

STATE OF CALIFORNIA
DEPARTMENT OF TRANSPORTATION

TRAFFIC CONTROL SYSTEM TABLES FOR LANE AND RAMP CLOSURES

NO SCALE

RSP T9 DATED JULY 19, 2013 SUPERSEDES RSP T9 DATED APRIL 19, 2013 THAT SUPPLEMENTS THE STANDARD PLANS BOOK DATED 2010.

REVISED STANDARD PLAN RSP T9

DATE PLOTTED => 09-FEB-2016
TIME PLOTTED => 16:04

Dist	COUNTY	ROUTE	POST MILES TOTAL PROJECT	SHEET NO.	TOTAL SHEETS
02	Tri	36	R9.2/15.8	24	25

Devinder Singh
REGISTERED CIVIL ENGINEER

October 17, 2014
PLANS APPROVAL DATE

REGISTERED PROFESSIONAL ENGINEER Devinder Singh No. C50470 Exp. 6-30-15 CIVIL STATE OF CALIFORNIA

THE STATE OF CALIFORNIA OR ITS OFFICERS OR AGENTS SHALL NOT BE RESPONSIBLE FOR THE ACCURACY OR COMPLETENESS OF SCANNED COPIES OF THIS PLAN SHEET.

TO ACCOMPANY PLANS DATED 11-30-15

NOTES:

See Revised Standard Plan RSP T9 for tables.

Use cone spacing X for taper segment, Y for tangent segment or Z for conflict situations, as approriate, per Table 1, unless X, Y, or Z cone spacing is shown on this sheet.

Unless otherwise specified in the special provisions, all temporary warning signs shall have black legend on fluorescent orange background.

California codes are designated by (CA). Otherwise, Federal (MUTCD) codes are shown.

TYPICAL LANE CLOSURE WITH REVERSIBLE CONTROL

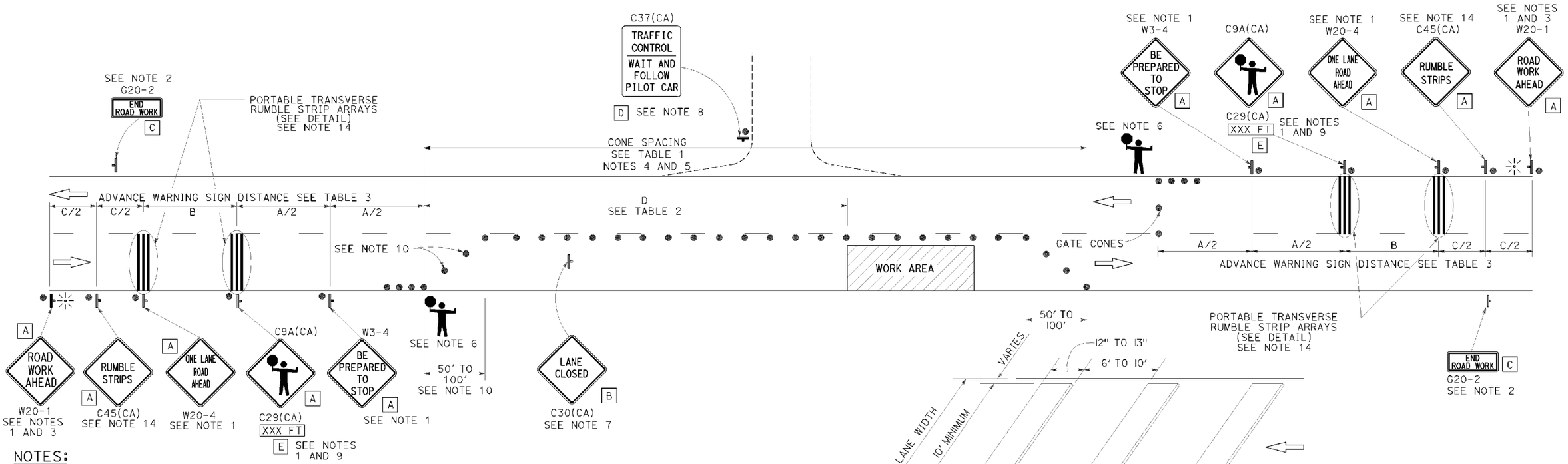

NOTES:

1. Each advance warning sign in each direction of travel shall be equipped with at least two flags for daytime closure. Each flag shall be at least 16" x 16" in size and shall be orange or fluorescent red-orange in color. Flashing beacons shall be placed at the locations indicated for lane closure during hours of darkness.
2. A G20-2 "END ROAD WORK" sign, as appropriate, shall be placed at the end of the lane control unless the end of work area is obvious, or ends within a larger project's limits.
3. If the W20-1 sign would follow within 2000' of a stationary W20-1 or G20-1 "ROAD WORK NEXT _____ MILES", use a W20-4 sign for the first advance warning sign.
4. All cones used for lane closures during the hours of darkness shall be fitted with retroreflective bands (or sleeves) as specified in the specifications.
5. Portable delineators, placed at one-half the spacing indicated for traffic cones, may be used instead of cones for daytime closures only.
6. Additional advance flaggers may be required. Flagger should stand in a conspicuous place, be visible to approaching traffic as well as approaching vehicles after the first vehicle has stopped. During the hours of darkness, the flagging-station and flagger shall be illuminated and clearly visible to approaching traffic. The illumination footprint of the lighting on the ground shall be at least 20' in diameter. Place a minimum of four cones at 50' intervals in advance of flagger station as shown.
7. Place C30(CA) "LANE CLOSED" sign at 500' to 1000' intervals throughout extended work areas. They are optional if the work area is visible from the flagger station.
8. When a pilot car is used, place a C37(CA) "TRAFFIC CONTROL-WAIT AND FOLLOW PILOT CAR" sign with black legend on white background at all intersections, driveways and alleys without a flagger within traffic control area. Signs shall be clean and visible at all times. Where traffic can not be effectively self-regulated, at least one flagger shall be used at each intersection within traffic control area.
9. An optional C29(CA) sign may be placed below the C9A(CA) sign.
10. Either traffic cones or barricades shall be placed on the taper. Barricades shall be Type I, II, or III.
11. The color of the portable transverse rumble strips shall be black or orange. Use 2 arrays, each array shall consist of 3 rumble strips.
12. Portable transverse rumble strips shall not be placed on sharp horizontal or vertical curves nor shall they be placed through pedestrian crossings.
13. If the portable transverse rumble strips become out of alignment (skewed) by more than 6 inches, measured from one end to the other, they shall be readjusted to bring the placement back to the original location.
14. Portable transverse rumble strips are not required if any one of the following conditions is satisfied:
    A. Work duration occupies a location for four hours or less
    B. Posted speed limit is below 45 MPH
    C. Work is of emergency nature
    D. Work zone is in snow or icy weather conditions

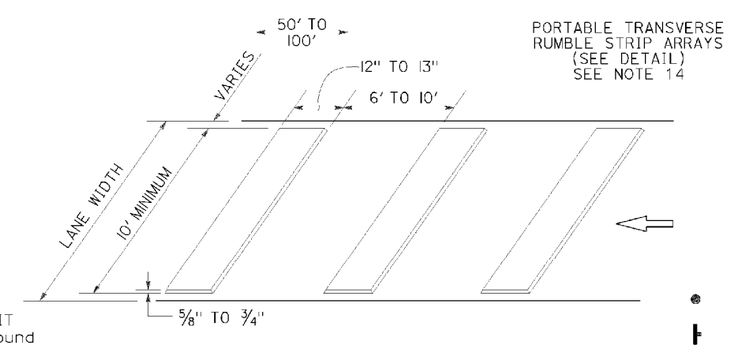

PORTABLE TRANSVERSE RUMBLE STRIP ARRAY DETAIL

LEGEND

- TRAFFIC CONE
- TEMPORARY TRAFFIC CONTROL SIGN
- PORTABLE FLASHING BEACON
- FLAGGER

SIGN PANEL SIZE (Min)

A	48" x 48"
B	30" x 30"
C	36" x 18"
D	36" x 42"
E	20" x 7"

STATE OF CALIFORNIA
DEPARTMENT OF TRANSPORTATION

TRAFFIC CONTROL SYSTEM FOR LANE CLOSURE ON TWO LANE CONVENTIONAL HIGHWAYS

NO SCALE

RSP T13 DATED OCTOBER 17, 2014 SUPERSEDES RSP T13 DATED JULY 18, 2014 AND RSP T13 DATED APRIL 19, 2013 AND STANDARD PLAN T13 DATED MAY 20, 2011 - PAGE 241 OF THE STANDARD PLANS BOOK DATED 2010.

REVISED STANDARD PLAN RSP T13

2010 REVISED STANDARD PLAN RSP T13

DATE PLOTTED => 09-FEB-2016
TIME PLOTTED => 16:04

Dist	COUNTY	ROUTE	POST MILES TOTAL PROJECT	SHEET No.	TOTAL SHEETS
02	Tri	36	R9.2/15.8	25	25

REGISTERED CIVIL ENGINEER

April 19, 2013
PLANS APPROVAL DATE

REGISTERED PROFESSIONAL ENGINEER
Gurinderpal Bhullar
No. C48815
Exp. 9-30-14
CIVIL
STATE OF CALIFORNIA

THE STATE OF CALIFORNIA OR ITS OFFICERS OR AGENTS SHALL NOT BE RESPONSIBLE FOR THE ACCURACY OR COMPLETENESS OF SCANNED COPIES OF THIS PLAN SHEET.

TO ACCOMPANY PLANS DATED 11-30-15

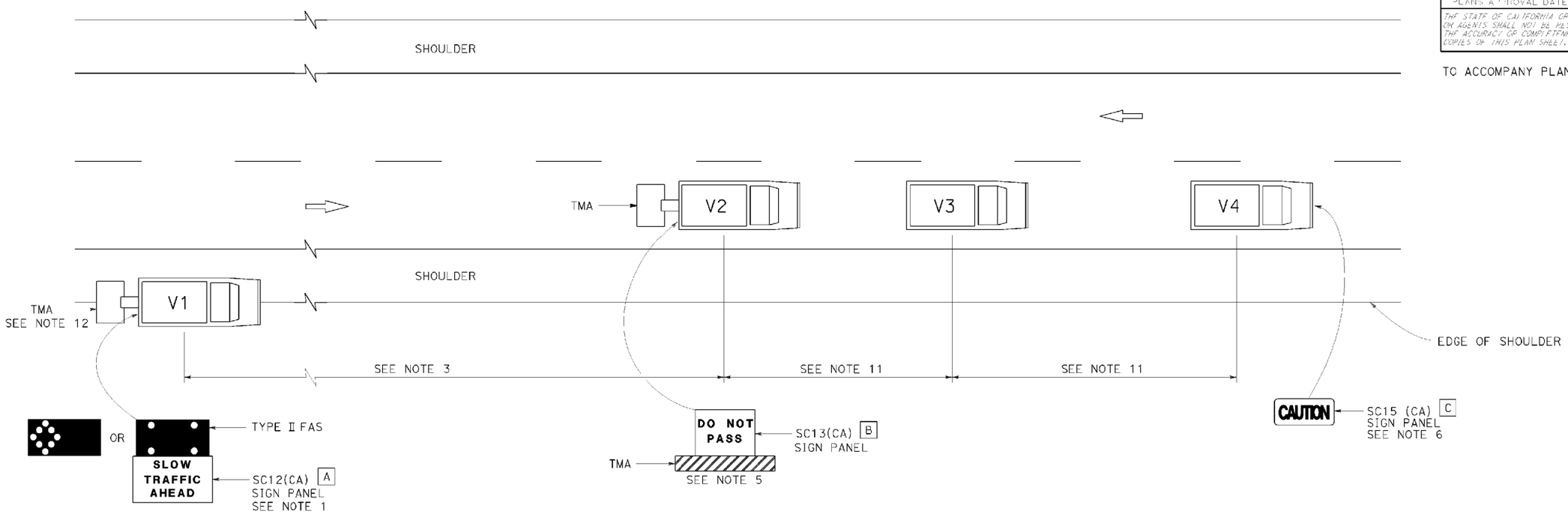

LEGEND

V1	SIGN VEHICLE
V2	SHADOW VEHICLE
V3	WORK/APPLICATION VEHICLE
V4	SIGN VEHICLE
TMA	TRUCK-MOUNTED ATTENUATOR
	FLASHING ARROW SIGN (FAS) IN FLASHING CAUTION MODE
	FLASHING ARROW SIGN (FAS) IN ALTERNATING DIAMOND CAUTION

SIGN PANEL SIZE (Min)

A	72" x 42"
B	54" x 42"
C	54" x 24"

NOTES:

1. Either a changeable message sign or a SC12(CA) "SLOW TRAFFIC AHEAD" sign shall be mounted on the rear of sign vehicle V1. The changeable message sign shall be sequenced to show the "CAUTION" message first, follow by the "SLOW TRAFFIC AHEAD" message. A Type II flashing arrow sign may be used with the SC12(CA) sign panel.
2. Sign vehicle V1 should be positioned where highly visible when shoulders are not available.
3. If traffic queues develop, sign vehicle V1 should be positioned upstream from the end of queue.
4. Vehicle-mounted sign panels shall have Type III or above retroreflective sheeting, black on white, or black on fluorescent orange, with 6" minimum series D letters per Caltrans sign specifications.
5. Shadow vehicle shall be equipped with a truck-mounted attenuator. The sign panel shown shall be mounted on the rear of shadow vehicle V2. The message "LANE CLOSED" may be used in place of the "DO NOT PASS" message.
6. The sign panel shown shall be mounted on the front of sign vehicle V4, facing opposing traffic.
7. All vehicles shall be equipped with flashing or rotating amber lights.
8. Sign vehicle V4 will not be required when the work and vehicles V2 and V3 are 2' or more from the centerline of the highway during the work or application operations.
9. All vehicles used for lane closures shall be equipped with two-way radios and the vehicle operators shall maintain communication during the work or application operation.
10. This plan shall not be used where workers would be on foot in the work area. Use a stationary type lane closure (Revised Standard Plan T13) for this condition.
11. Minimize spacing between vehicles V2 and V3 and vehicles V3 and V4 to deter road users from driving in between them.
12. If sign vehicle V1 encroaches into the traffic lane due to insufficient shoulder width, sign vehicle V1 shall be equipped with a truck-mounted attenuator. Sign vehicle V1 shall stay as close to the edge of shoulder as practicable.

STATE OF CALIFORNIA
DEPARTMENT OF TRANSPORTATION

TRAFFIC CONTROL SYSTEM FOR MOVING LANE CLOSURE ON TWO LANE HIGHWAYS

NO SCALE

RSP T17 DATED APRIL 19, 2013 SUPERSEDES STANDARD PLAN T17
DATED MAY 20, 2011 - PAGE 245 OF THE STANDARD PLANS BOOK DATED 2010.

REVISED STANDARD PLAN RSP T17

2010 REVISED STANDARD PLAN RSP T17

DATE PLOTTED => 09-FEB-2016
TIME PLOTTED => 16:04

USERNAME => S123119
DGN FILE => 21h020va010.dgn

\\st02caddm02\cadd\proj3\02\1h020_plans\pse\21h020va010.dgn