Dist	COUNTY	ROUTE	POST MILES TOTAL PROJECT	SHEET No.	TOTAL SHEETS
01	Men,Lak	175	Var	1	32

ACSTP-43K5(004)E

STATE OF CALIFORNIA
DEPARTMENT OF TRANSPORTATION

PROJECT PLANS FOR CONSTRUCTION ON
STATE HIGHWAY

IN MENDOCINO AND LAKE COUNTIES AT VARIOUS LOCATIONS FROM 4.0 MILES WEST OF THE MENDOCINO/LAKE COUNTY LINE TO 0.8 MILE EAST OF THE MENDOCINO/LAKE COUNTY LINE

TO BE SUPPLEMENTED BY STANDARD PLANS DATED MAY 2006

INDEX OF PLANS

SHEET No.	DESCRIPTION
1	TITLE AND LOCATION MAP
2-7	LAYOUTS
8	CONSTRUCTION DETAILS
9-10	DRAINAGE DETAILS
11	DRAINAGE QUANTITIES
12	CONSTRUCTION AREA SIGNS
13	PAVEMENT DELINEATION DETAILS AND QUANTITIES
14	SUMMARY OF QUANTITIES
15-32	REVISED AND NEW STANDARD PLANS

THE STANDARD PLANS LIST APPLICABLE TO THIS CONTRACT IS INCLUDED IN THE NOTICE TO BIDDERS AND SPECIAL PROVISIONS BOOK.

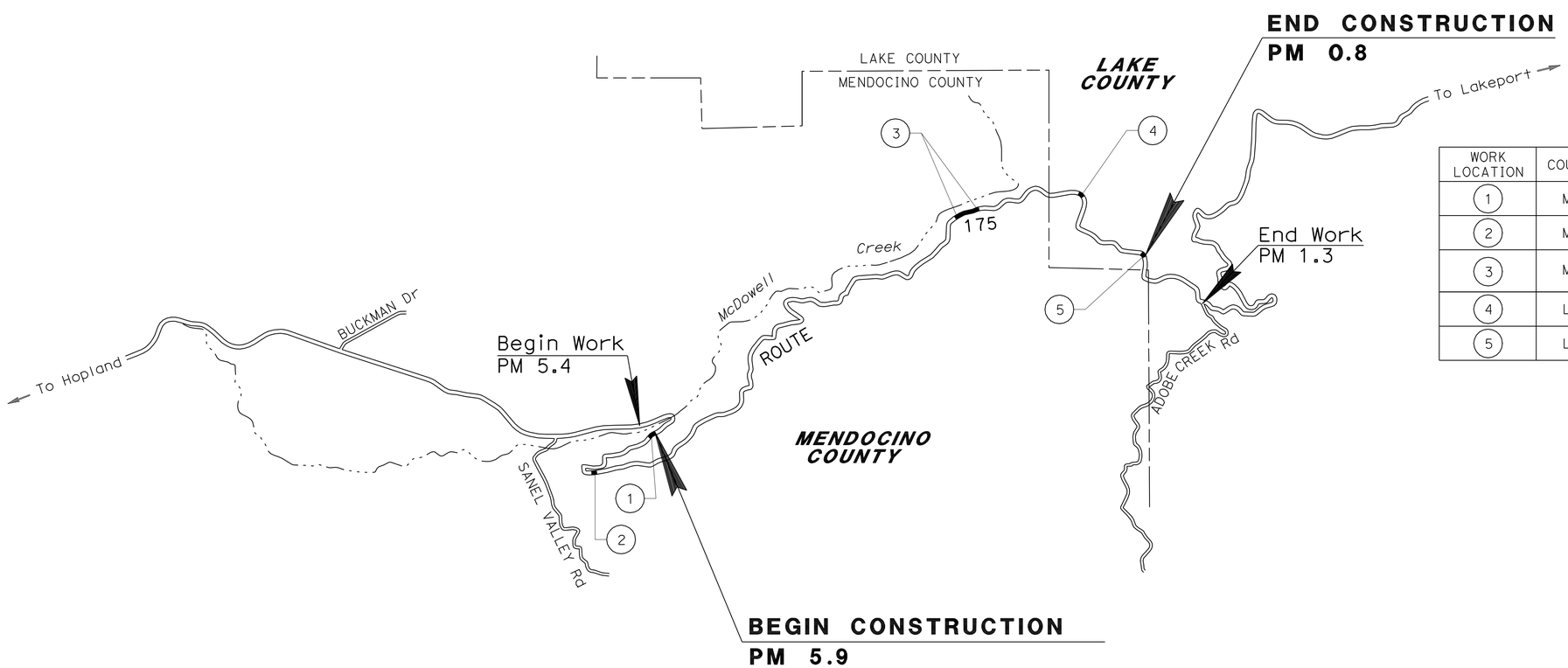

WORK LOCATION	COUNTY	ROUTE	PM	STATIONING
1	Men	175	5.90	"L1" 12+25 TO "L1" 14+00
2	Men	175	6.48	"L2" 11+25 TO "L2" 13+00
3	Men	175	9.25, 9.40	"L3" 10+25 TO "L3" 14+00 "L3" 16+50 TO "L3" 21+50
4	Lak	175	0.20	"L4" 12+00 TO "L4" 13+00
5	Lak	175	0.80	"L5" 12+00 TO "L5" 16+00

NO SCALE

THE CONTRACTOR SHALL POSSESS THE CLASS (OR CLASSES) OF LICENSE AS SPECIFIED IN THE "NOTICE TO BIDDERS."

Mitch Andrus 6-24-09
PROJECT ENGINEER DATE
REGISTERED CIVIL ENGINEER

April 12, 2010
PLANS APPROVAL DATE

REGISTERED PROFESSIONAL ENGINEER
MITCH ANDRUS
No. C48753
Exp. 9-30-10
CIVIL
STATE OF CALIFORNIA

THE STATE OF CALIFORNIA OR ITS OFFICERS OR AGENTS SHALL NOT BE RESPONSIBLE FOR THE ACCURACY OR COMPLETENESS OF SCANNED COPIES OF THIS PLAN SHEET.

PROJECT MANAGER FRANK DEMLING
DESIGN ENGINEER MITCH ANDRUS

CONTRACT No.	01-477104
PROJECT ID	0100000354

LAST REVISION 06-24-09
DATE PLOTTED => 17-AUG-2010
TIME PLOTTED => 13:11

Dist	COUNTY	ROUTE	POST MILES TOTAL PROJECT	SHEET No.	TOTAL SHEETS
01	Men,Lak	175	Var	2	32

Mitch Andrus 6-24-09
REGISTERED CIVIL ENGINEER DATE

4-12-10
PLANS APPROVAL DATE

REGISTERED PROFESSIONAL ENGINEER MITCH ANDRUS No. C48753 Exp. 9-30-10 CIVIL STATE OF CALIFORNIA

THE STATE OF CALIFORNIA OR ITS OFFICERS OR AGENTS SHALL NOT BE RESPONSIBLE FOR THE ACCURACY OR COMPLETENESS OF SCANNED COPIES OF THIS PLAN SHEET.

NOTES: 1. FOR COMPLETE RIGHT OF WAY DATA, SEE RIGHT OF WAY RECORD MAPS AT DISTRICT OFFICE.

2. TEMPORARY FENCE (TYPE ESA) TO BE PLACED AT THE DIRECTION OF CALTRANS ENVIRONMENTAL.

CURVE DATA

No.	R	Δ	T	L
1	650.00′	14°50′09"	84.63′	168.31′
2	200.00′	31°55′14"	57.20′	111.42′
3	300.00′	17°26′35"	46.02′	91.33′

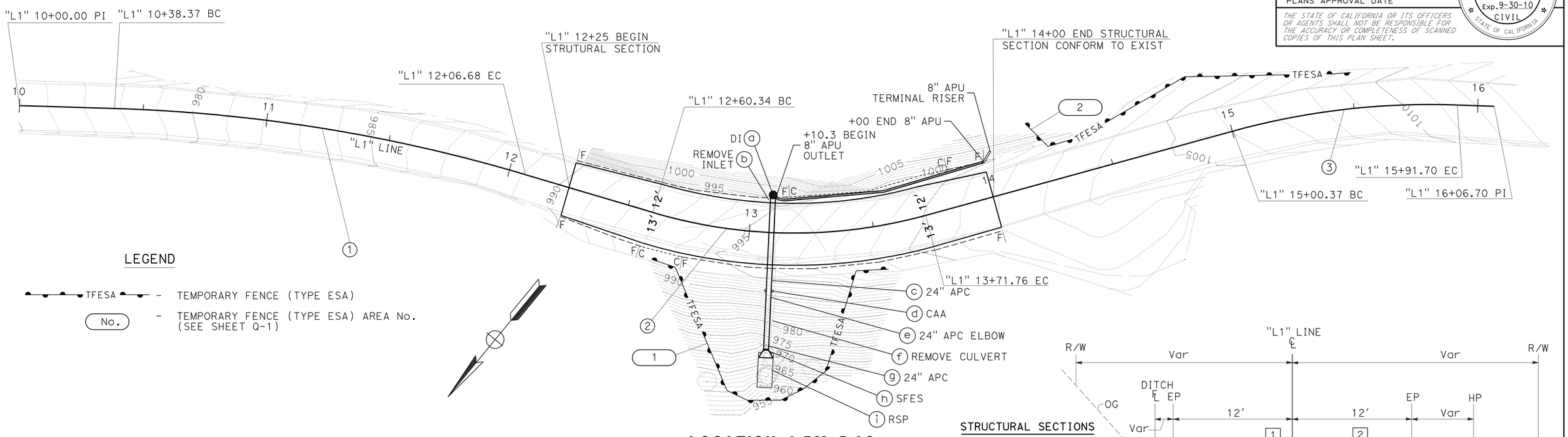

LOCATION 1-PM 5.90
PLAN

LEGEND

TFESA - TEMPORARY FENCE (TYPE ESA)

No. - TEMPORARY FENCE (TYPE ESA) AREA No. (SEE SHEET Q-1)

STRUCTURAL SECTIONS

1 0.35′ HMA (TYPE A)
1.25′ CI 2 AB

2 EXISTING ROADWAY
0.25′ AC (TYPE B)
0.40′ CI 2 AB

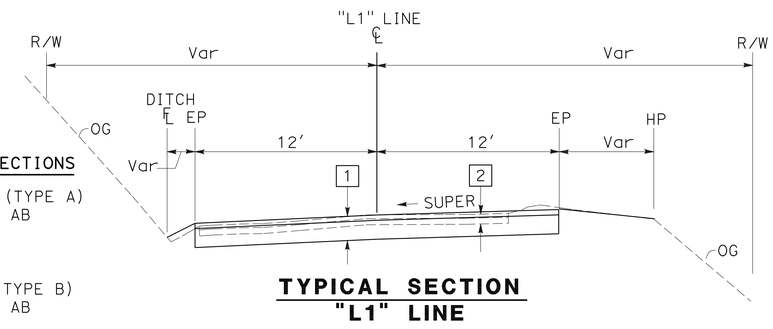

TYPICAL SECTION
"L1" LINE

STA "L1" 12+25.000 TO STA "L1 "14+00.00

NOTE:
1. THIS PROFILE ACCURATE FOR DRAINAGE INFORMATION ONLY.

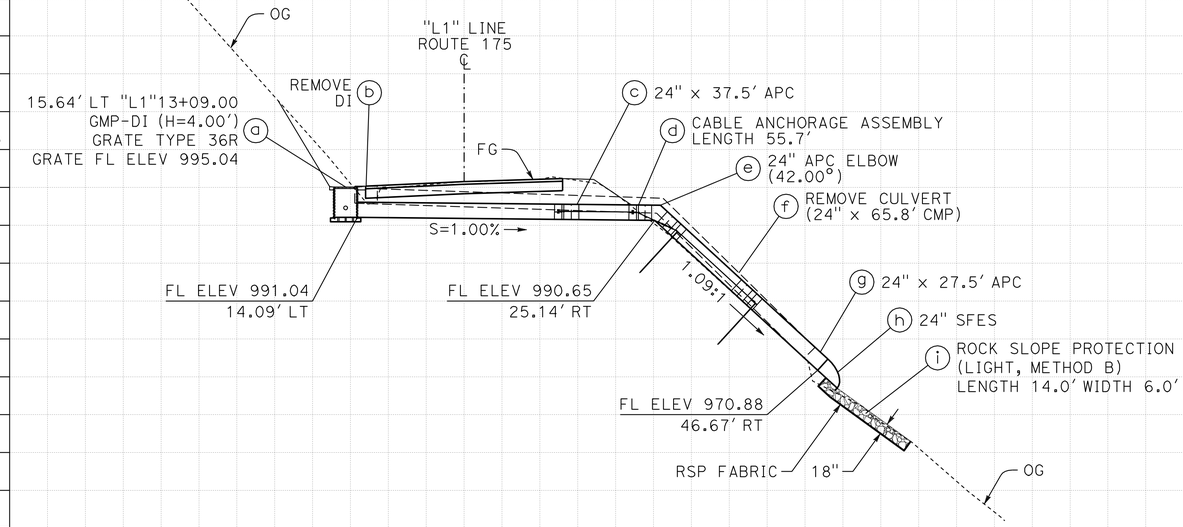

LOCATION 1
SCALE: HORIZONTAL 1" = 10′
VERTICAL 1" = 10′

DRAINAGE SYSTEM 1

"L1"13+09.00
NO SKEW

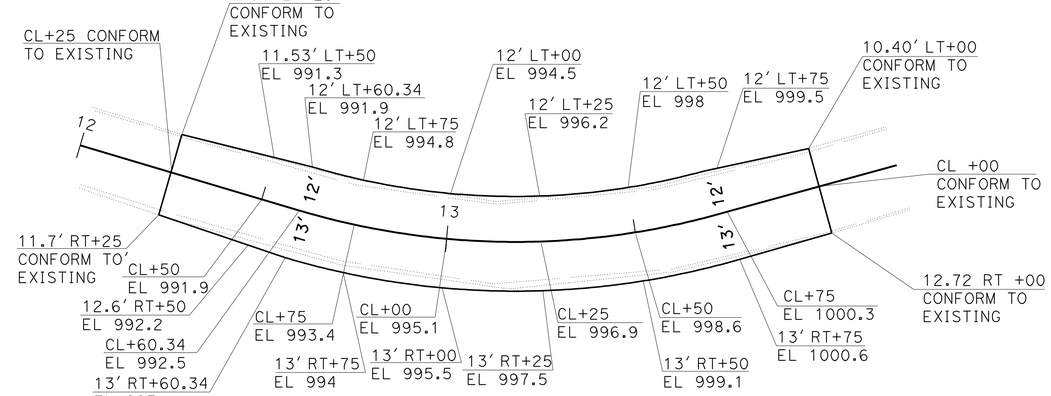

PAVEMENT ELEVATION DETAIL
"L1" LINE

LAYOUT
SCALE: 1" = 20′

L-1

DSJ	3-1-09
GORDO	12-10-08
REVISED BY	DATE REVISED
K L BRIMHALL	L GRYBOS
CALCULATED-DESIGNED BY	CHECKED BY
FUNCTIONAL SUPERVISOR	DOUGLAS S. JONES

STATE OF CALIFORNIA - DEPARTMENT OF TRANSPORTATION
DIVISION OF DESIGN

LAST REVISION 12-09-08 | DATE PLOTTED => 12-APR-2010 | TIME PLOTTED => 10:03

Dist	COUNTY	ROUTE	POST MILES TOTAL PROJECT	SHEET No.	TOTAL SHEETS
01	Men,Lak	175	Var	3	32

Mitch Andrus 6-24-09
REGISTERED CIVIL ENGINEER DATE

4-12-10
PLANS APPROVAL DATE

REGISTERED PROFESSIONAL ENGINEER
MITCH ANDRUS
No. C48753
Exp. 9-30-10
CIVIL
STATE OF CALIFORNIA

THE STATE OF CALIFORNIA OR ITS OFFICERS OR AGENTS SHALL NOT BE RESPONSIBLE FOR THE ACCURACY OR COMPLETENESS OF SCANNED COPIES OF THIS PLAN SHEET.

NOTE: FOR COMPLETE RIGHT OF WAY DATA, SEE RIGHT OF WAY RECORD MAPS AT DISTRICT OFFICE.

CURVE DATA

No.	R	Δ	T	L
1	157.86′	29°49′46″	42.05′	82.19′
2	500.00′	9°7′20″	39.89′	79.61′
3	800.00′	5°11′23″	36.26′	72.46′
4	500.00′	12°0′44″	52.61′	104.83′

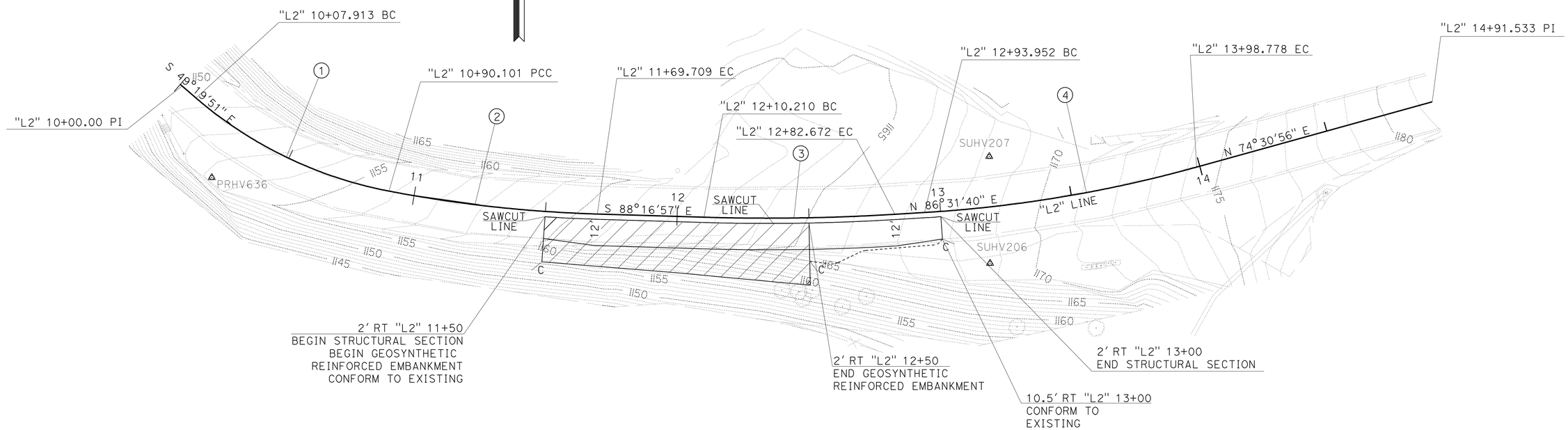

LOCATION 2-PM 6.48
PLAN

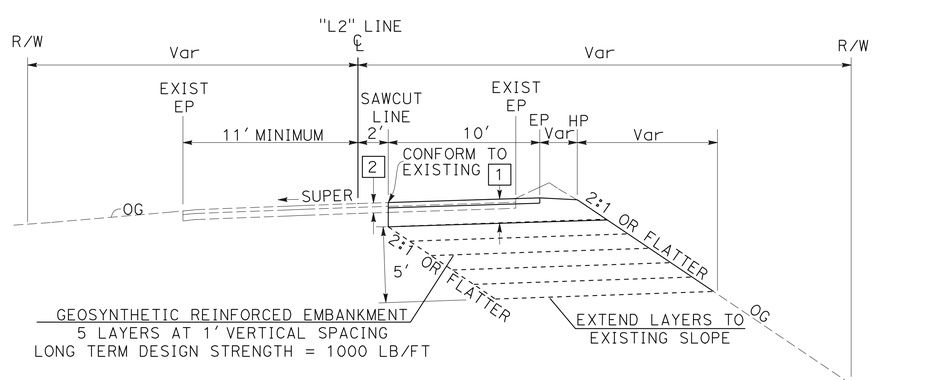

STRUCTURAL SECTIONS

1 0.35′ HMA (TYPE A)
1.25′ CI 2 AB

2 EXISTING ROADWAY
0.25′ AC (TYPE B)
0.40′ CI 2 AB

TYPICAL SECTION
"L2" LINE
STA "L2" 11+25.000 TO STA "L2 "12+50.00

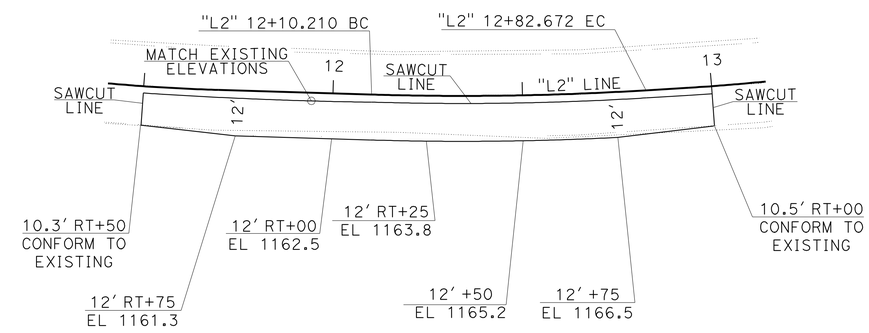

PAVEMENT ELEVATIONS
"L2" LINE
STA "L2" 11+25.000 TO STA "L2 "12+50.00

LAYOUT
SCALE: 1" = 20′

L-2

DSJ	3-1-09
GORDO	12-10-08
REVISED BY	DATE REVISED
K L BRIMHALL	L GRYBOS
CALCULATED-DESIGNED BY	CHECKED BY
FUNCTIONAL SUPERVISOR	DOUGLAS S. JONES

STATE OF CALIFORNIA - DEPARTMENT OF TRANSPORTATION
DIVISION OF DESIGN
Caltrans

LAST REVISION 12-09-08 | DATE PLOTTED => 12-APR-2010 | TIME PLOTTED => 10:03

Dist	COUNTY	ROUTE	POST MILES TOTAL PROJECT	SHEET No.	TOTAL SHEETS
01	Men,Lak	175	Var	4	32

Mitch Andrus 6-24-09
REGISTERED CIVIL ENGINEER DATE

4-12-10
PLANS APPROVAL DATE

REGISTERED PROFESSIONAL ENGINEER MITCH ANDRUS No. C48753 Exp. 9-30-10 CIVIL STATE OF CALIFORNIA

THE STATE OF CALIFORNIA OR ITS OFFICERS OR AGENTS SHALL NOT BE RESPONSIBLE FOR THE ACCURACY OR COMPLETENESS OF SCANNED COPIES OF THIS PLAN SHEET.

NOTE: FOR COMPLETE RIGHT OF WAY DATA, SEE RIGHT OF WAY RECORD MAPS AT DISTRICT OFFICE.

CURVE DATA

No.	R	Δ	T	L
1	240.00′	30°49′56″	66.18′	129.15′
2	400.00′	16°46′18″	58.97′	117.09′
3	1199.99′	4°13′16″	44.22′	88.41′
4	350.00′	20°16′26″	62.58′	123.85′

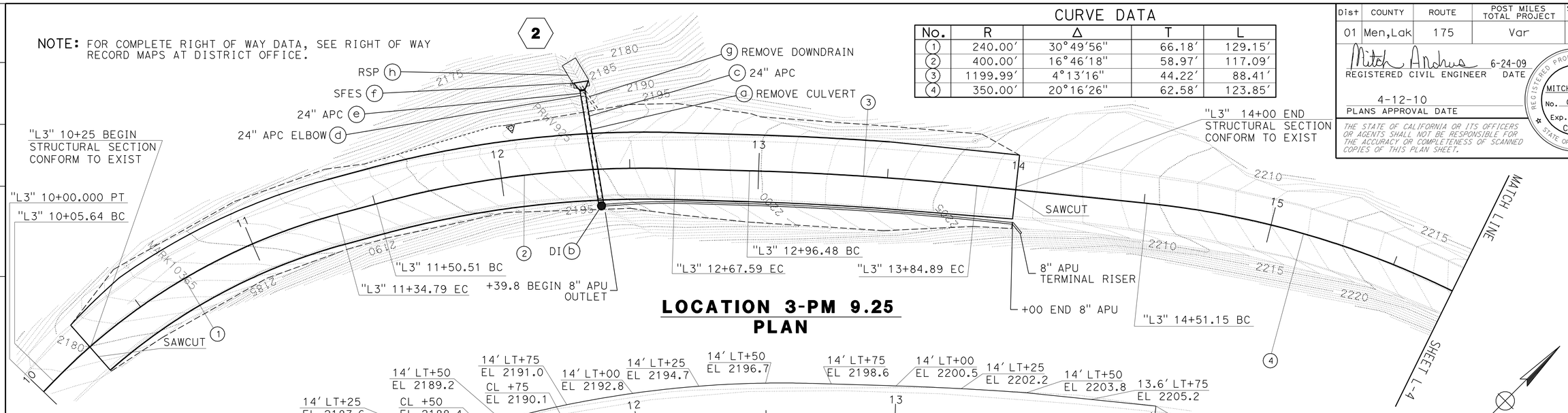

LOCATION 3-PM 9.25
PLAN

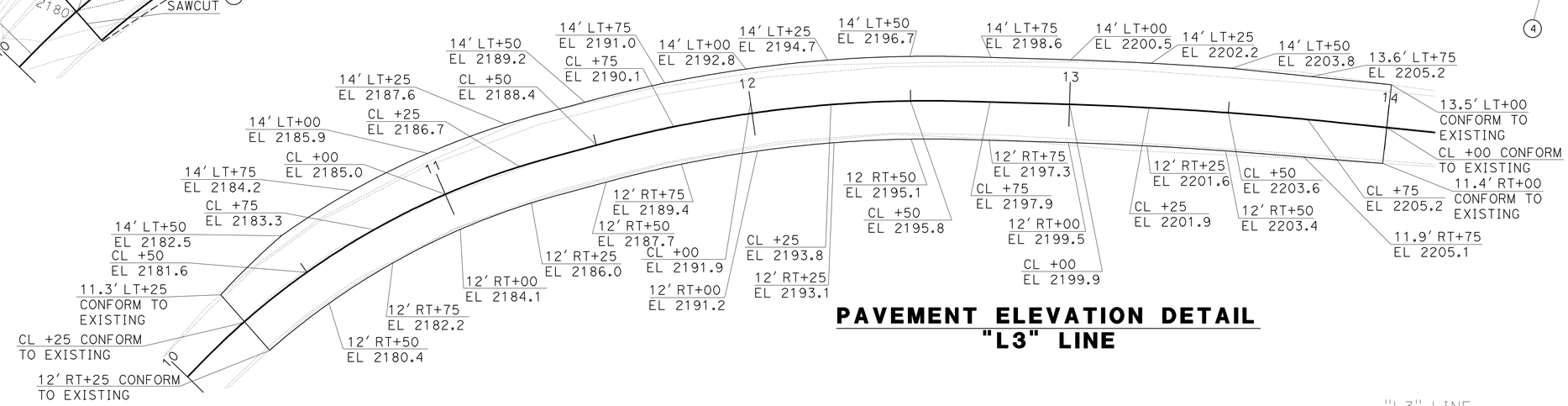

PAVEMENT ELEVATION DETAIL
"L3" LINE

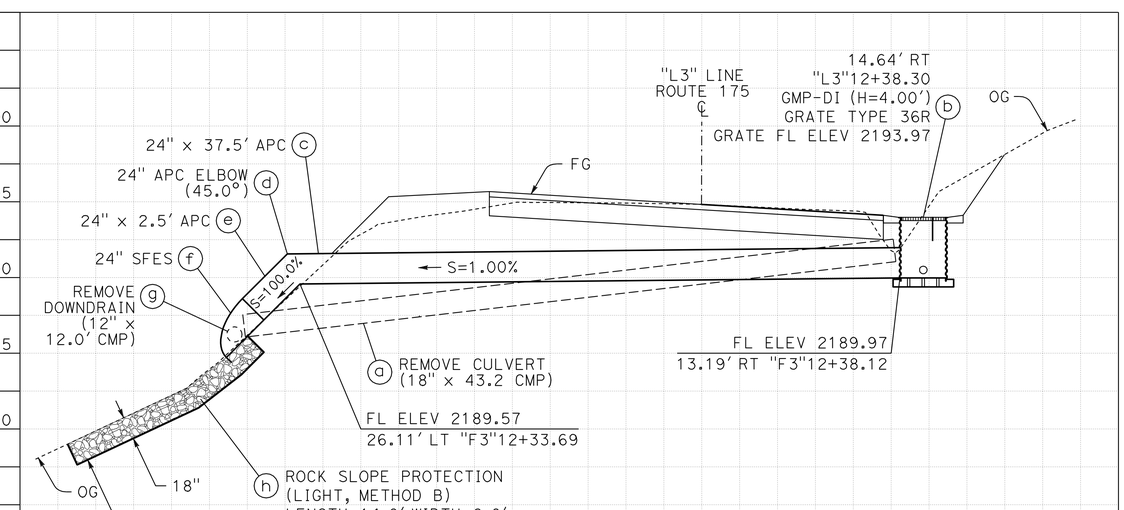

LOCATION 3
SCALE: HORIZONTAL 1" = 5′
VERTICAL 1" = 5′

DRAINAGE SYSTEM 2

"L3"12+36.53
6.61° SKEW

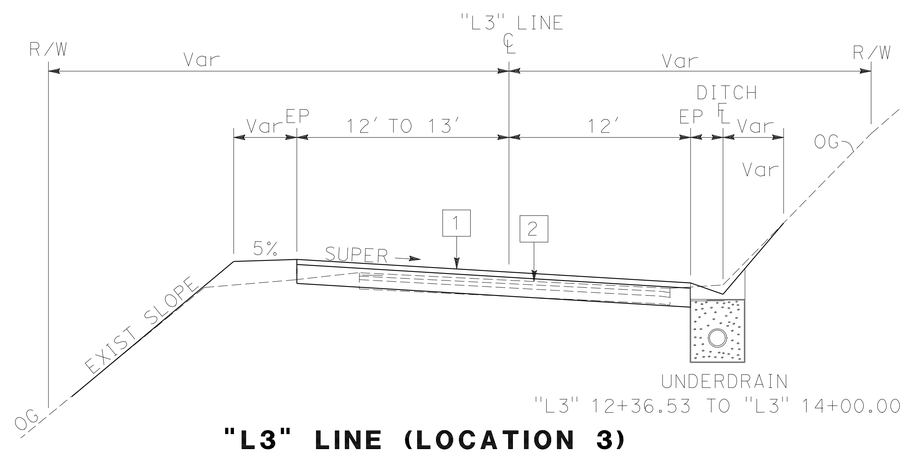

"L3" LINE (LOCATION 3)

STA "L3" 10+25.000 TO STA "L3 "14+00.000

STRUCTURAL SECTIONS

1 0.35′ HMA (TYPE A)
1.25′ CI 2 AB

2 EXISTING ROADWAY
0.25′ AC (TYPE B)
0.40′ CI 2 AB

LAYOUT
SCALE: 1" = 20′

L-3

DSJ	3-1-09		
GORDO	12-10-08		
REVISED BY	DATE REVISED		
K L BRIMHALL	L GRYBOS		
CALCULATED-DESIGNED BY	CHECKED BY		
FUNCTIONAL SUPERVISOR	DOUGLAS S. JONES		
STATE OF CALIFORNIA - DEPARTMENT OF TRANSPORTATION	DIVISION OF DESIGN		

LAST REVISION 12-09-08 | DATE PLOTTED => 12-APR-2010 | TIME PLOTTED => 10:03

Dist	COUNTY	ROUTE	POST MILES TOTAL PROJECT	SHEET No.	TOTAL SHEETS
01	Men,Lak	175	Var	5	32

Mitch Andrus 6-24-09
REGISTERED CIVIL ENGINEER DATE

4-12-10
PLANS APPROVAL DATE

REGISTERED PROFESSIONAL ENGINEER
MITCH ANDRUS
No. C48753
Exp. 9-30-10
CIVIL
STATE OF CALIFORNIA

THE STATE OF CALIFORNIA OR ITS OFFICERS OR AGENTS SHALL NOT BE RESPONSIBLE FOR THE ACCURACY OR COMPLETENESS OF SCANNED COPIES OF THIS PLAN SHEET.

NOTE: FOR COMPLETE RIGHT OF WAY DATA, SEE RIGHT OF WAY RECORD MAPS AT DISTRICT OFFICE.

CURVE DATA

No.	R	Δ	T	L
1	350.00′	12°51′59″	39.46′	78.60′
2	340.00′	24°49′54″	74.85′	147.35′
3	325.00′	24°47′33″	71.43′	140.63′
4	499.98′	6°13′19″	27.17′	54.29′

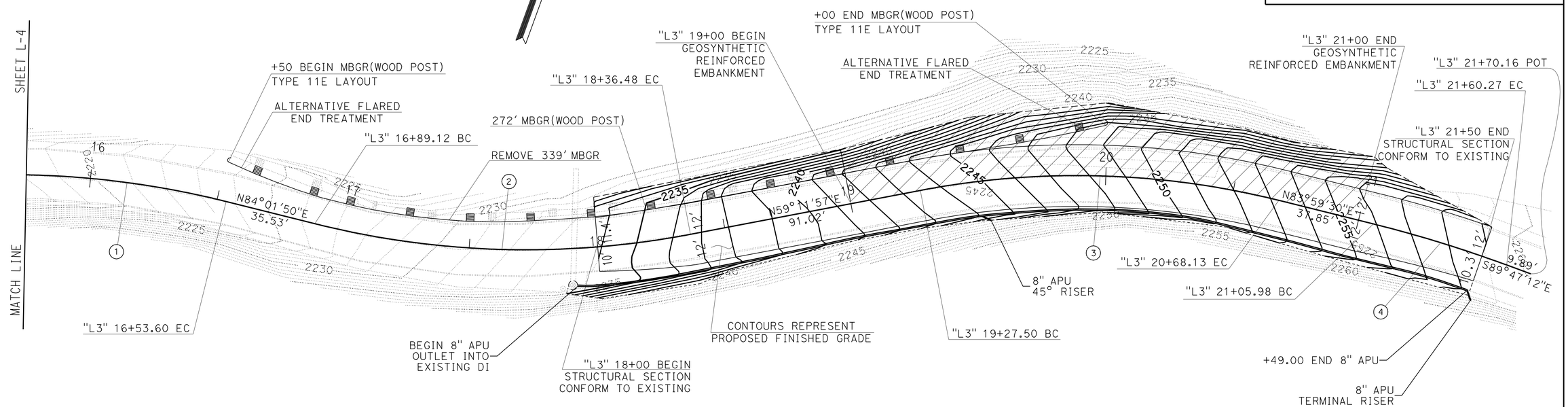

LOCATION 3-PM 9.40
PLAN

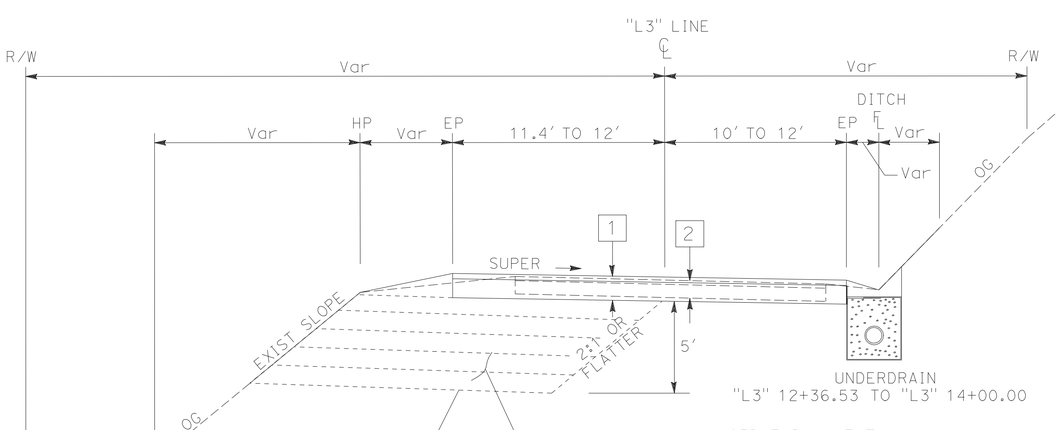

STRUCTURAL SECTIONS

1 0.35′ HMA (TYPE A)
1.25′ CI 2 AB

2 EXISTING ROADWAY
0.25′ AC (TYPE B)
0.40′ CI 2 AB

TYPICAL SECTION
"L3" LINE
STA "L3" 19+00.000 TO STA "L3 "21+00.00

LAYOUT
SCALE: 1" = 20′

L-4

DSJ	3-1-09
GORDO	12-10-08
REVISED BY	DATE REVISED
K L BRIMHALL	L GRYBOS
CALCULATED-DESIGNED BY	CHECKED BY
FUNCTIONAL SUPERVISOR	DOUGLAS S. JONES

STATE OF CALIFORNIA - DEPARTMENT OF TRANSPORTATION
Caltrans
DIVISION OF DESIGN

LAST REVISION 12-09-08 | DATE PLOTTED => 12-APR-2010 | TIME PLOTTED => 10:04

Dist	COUNTY	ROUTE	POST MILES TOTAL PROJECT	SHEET No.	TOTAL SHEETS
01	Men,Lak	175	Var	6	32

Mitch Andrus 6-24-09
REGISTERED CIVIL ENGINEER DATE

4-12-10
PLANS APPROVAL DATE

REGISTERED PROFESSIONAL ENGINEER
MITCH ANDRUS
No. C48753
Exp.9-30-10
CIVIL
STATE OF CALIFORNIA

THE STATE OF CALIFORNIA OR ITS OFFICERS OR AGENTS SHALL NOT BE RESPONSIBLE FOR THE ACCURACY OR COMPLETENESS OF ELECTRONIC COPIES OF THIS PLAN SHEET.

NOTE: FOR COMPLETE RIGHT OF WAY DATA, SEE RIGHT OF WAY RECORD MAPS AT DISTRICT OFFICE.

CURVE DATA

No.	R	Δ	T	L
1	280.00′	68°17′39″	189.91′	333.75′

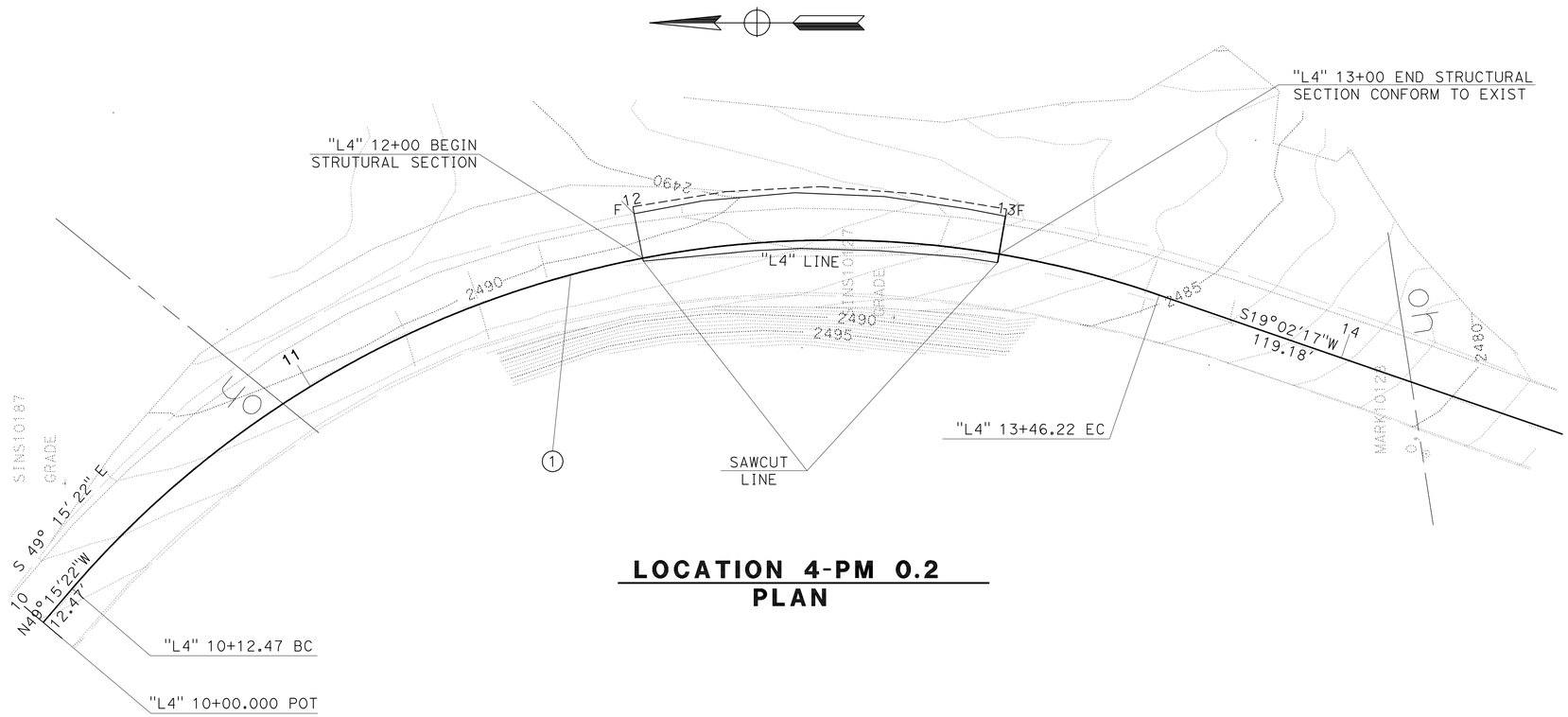

LOCATION 4-PM 0.2
PLAN

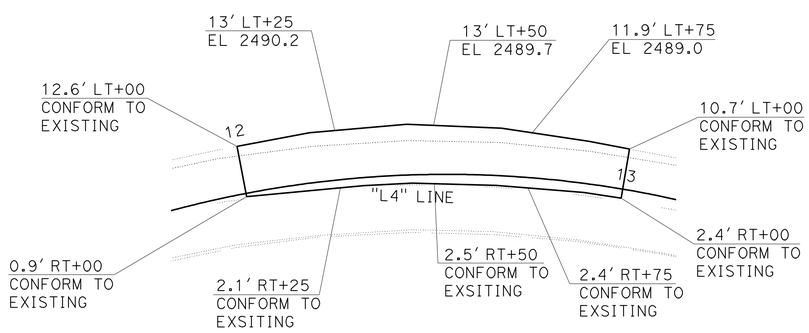

PAVEMENT ELEVATION DETAIL
"L4" LINE

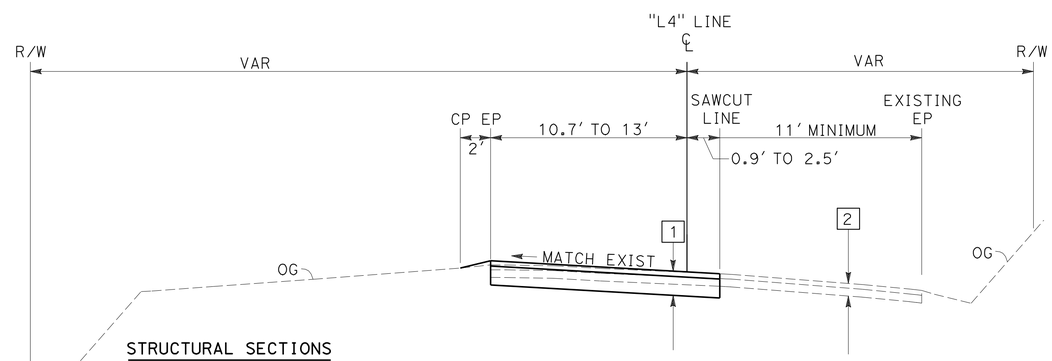

STRUCTURAL SECTIONS

1 0.35′ HMA (TYPE A)
1.25′ CI 2 AB

2 EXISTING
ROADWAY
0.25′ AC (TYPE B)
0.40′ CI 2 AB

TYPICAL SECTION
"L4" LINE
STA "L4" 12+00.000 TO STA "L4 "13+00.00

LAYOUT
SCALE: 1" = 20′

L-5

DSJ	3-1-09
GORDO	12-10-08
REVISED BY	DATE REVISED
K L BRIMHALL	L GRYBOS
CALCULATED-DESIGNED BY	CHECKED BY
FUNCTIONAL SUPERVISOR	DOUGLAS S. JONES

STATE OF CALIFORNIA - DEPARTMENT OF TRANSPORTATION
DIVISION OF DESIGN
Caltrans

LAST REVISION 12-09-08 | DATE PLOTTED => 12-APR-2010 | TIME PLOTTED => 10:04

Dist	COUNTY	ROUTE	POST MILES TOTAL PROJECT	SHEET No.	TOTAL SHEETS
01	Men,Lak	175	Var	7	32

Mitch Andrus 6-24-09
REGISTERED CIVIL ENGINEER DATE

4-12-10
PLANS APPROVAL DATE

REGISTERED PROFESSIONAL ENGINEER MITCH ANDRUS No. C48753 Exp.9-30-10 CIVIL STATE OF CALIFORNIA

THE STATE OF CALIFORNIA OR ITS OFFICERS OR AGENTS SHALL NOT BE RESPONSIBLE FOR THE ACCURACY OR COMPLETENESS OF ELECTRONIC COPIES OF THIS PLAN SHEET.

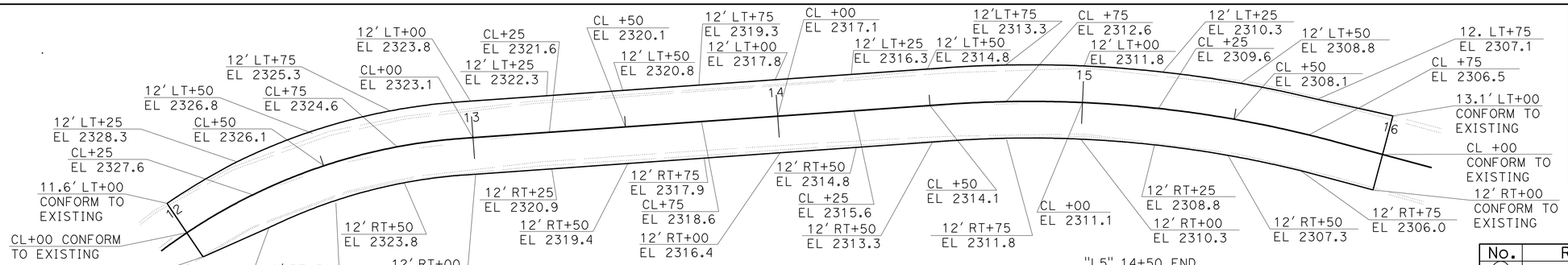

PAVEMENT ELEVATION DETAIL
"L5" LINE

CURVE DATA

No.	R	Δ	T	L
1	186.00'	82°3'52"	161.87'	266.41'
2	385.00'	19°5'53"	64.77'	128.33'

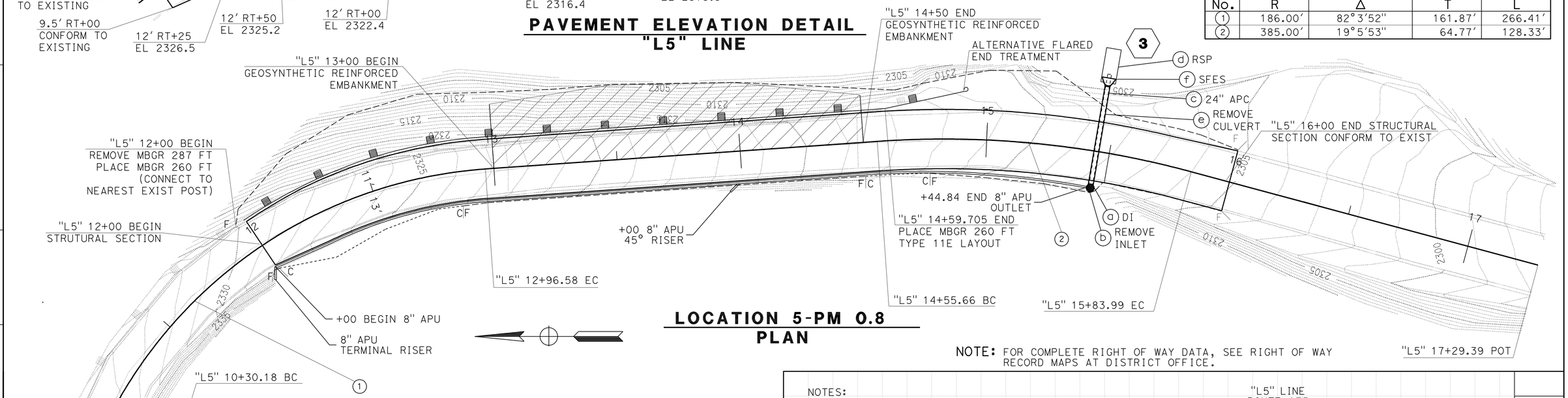

LOCATION 5-PM 0.8
PLAN

NOTE: FOR COMPLETE RIGHT OF WAY DATA, SEE RIGHT OF WAY RECORD MAPS AT DISTRICT OFFICE.

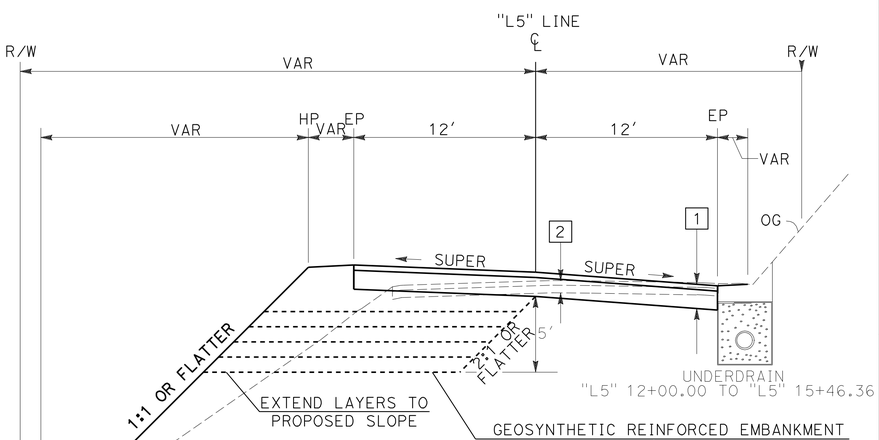

STRUCTURAL SECTIONS

1. 0.35' HMA (TYPE A)
   1.25' CI 2 AB
2. EXISTING ROADWAY
   0.25' AC (TYPE B)
   0.40' CI 2 AB

TYPICAL SECTION
"L5" LINE
STA "L5" 12+00.000 TO STA "L5" "16+00.00

NOTES:
1. THIS PROFILE ACCURATE FOR DRAINAGE INFORMATION ONLY.

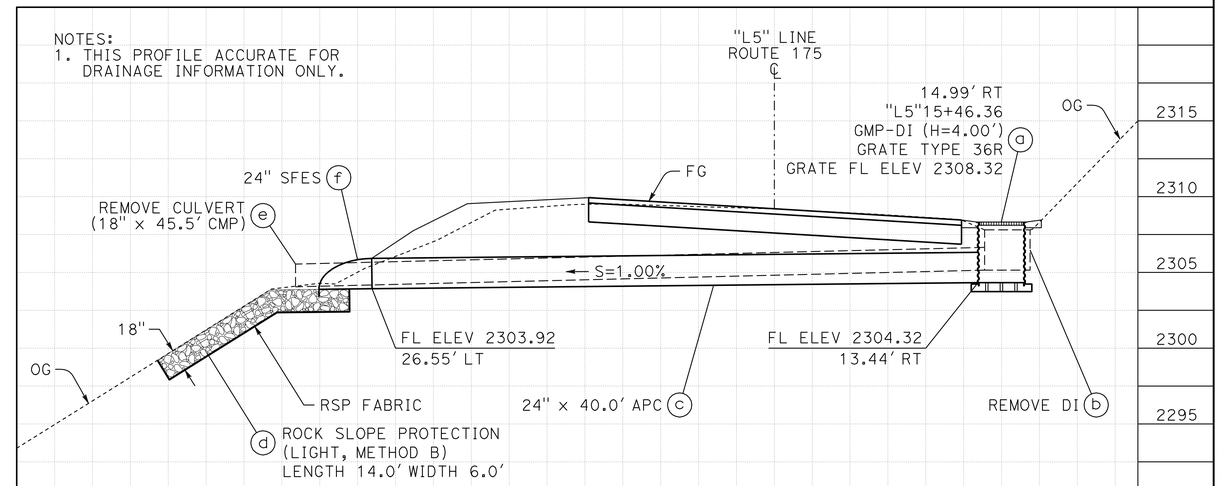

DRAINAGE SYSTEM 3

"L5"15+46.36
NO SKEW

LOCATION 5
SCALE: HORIZONTAL 1"=5'
VERTICAL 1"=5'

LAYOUT
SCALE: 1" = 20'

L-6

DSJ	3-1-09		
GORDO	12-10-08		
REVISED BY	DATE REVISED		
K L BRIMHALL	L GRYBOS		
CALCULATED-DESIGNED BY	CHECKED BY		
FUNCTIONAL SUPERVISOR	DOUGLAS S. JONES		

STATE OF CALIFORNIA - DEPARTMENT OF TRANSPORTATION
DIVISION OF DESIGN
Caltrans

LAST REVISION 12-09-08 | DATE PLOTTED => 12-APR-2010 | TIME PLOTTED => 10:10

Dist	COUNTY	ROUTE	POST MILES TOTAL PROJECT	SHEET No.	TOTAL SHEETS
01	Men,Lak	175	Var	8	32

Mitch Andrus 6-24-09
REGISTERED CIVIL ENGINEER DATE

4-12-10
PLANS APPROVAL DATE

REGISTERED PROFESSIONAL ENGINEER
MITCH ANDRUS
No. C48753
Exp. 9-30-10
CIVIL
STATE OF CALIFORNIA

THE STATE OF CALIFORNIA OR ITS OFFICERS OR AGENTS SHALL NOT BE RESPONSIBLE FOR THE ACCURACY OR COMPLETENESS OF SCANNED COPIES OF THIS PLAN SHEET.

NOTES:

1. ALL DIMENSIONS ARE IN FEET UNLESS OTHERWISE SHOWN.

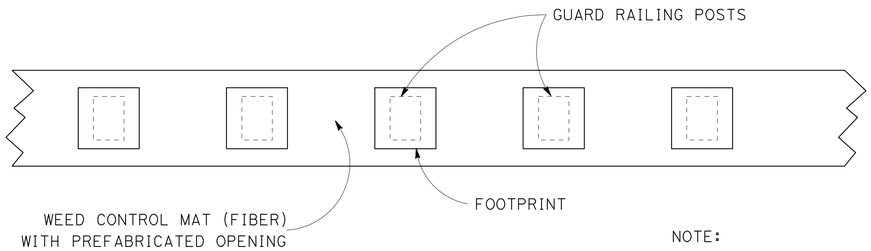

PLAN

NOTE:
POST SPACING & OTHER DIMENSIONS TO BE VERIFIED IN THE FIELD BY THE CONTRACTOR

GUARD RAILING WEED CONTROL MAT (FIBER)

8" APU OUTLETS AND EXTENSIONS

STATION	OFFSET	FL ELEVATION
"L1" 13+10.30	14.34′ LT(SEE NOTE m)	994.09
"L3" 12+39.80	14.06′ RT(SEE NOTE n)	2190.25
"L3" 17+91.38	14.05′ RT(SEE NOTE p)	2230.00
"L5" 15+44.84	14.99′ RT(SEE NOTE q)	2305.25

m. Outlet into DI System 1, see L-1.
n. Outlet into DI System 2, see L-3.
p. Outlet into Existing DI, see L-4.
q. Outlet into DI System 3, see L-6.

8" APU

STATION TO STATION		OFFSET	D
"L1" 13+10.30	"L1" 14+00.00	SEE NOTE a	3.50′
"L3" 12+39.80	"L3" 14+00.00	13.00′ RT	3.50′
"L3" 17+91.38	"L3" 21+48.70	SEE NOTE b	3.50′
"L5" 12+00.000	"L5" 15+44.84	SEE NOTE c	3.50′

a. Offset varies from 13.30′ LT to 14.60′ LT.
b. Offset varies from 13.00′ RT to 15.00′ RT.
c. Offset varies from 12.00′ RT TO 15.50′ RT.

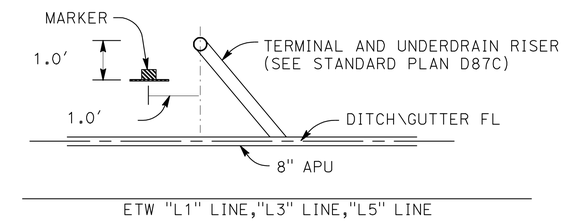

PLAN

UNDERDRAIN MARKER LOCATIONS

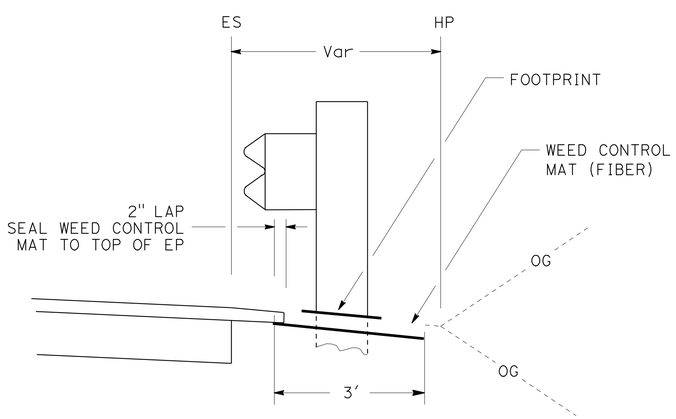

GUARD RAILING WEED CONTROL MAT (FIBER)

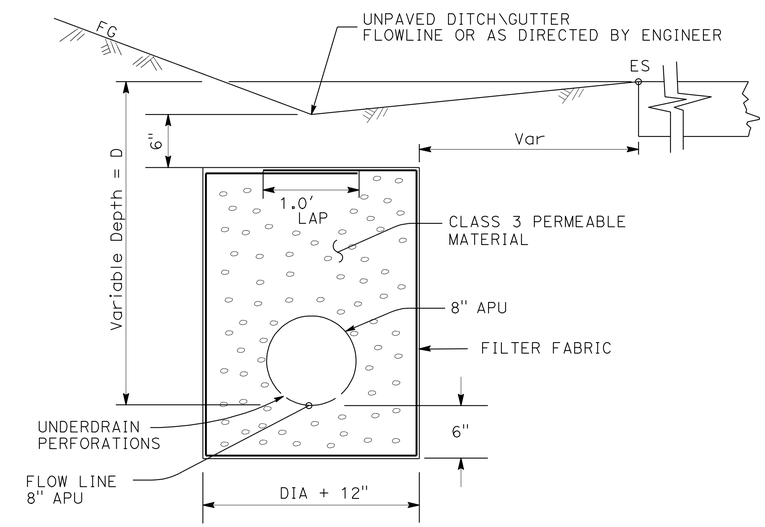

UNDERDRAIN INSTALLATION (UNPAVED GUTTER)

(SEE STANDARD PLAN D87C)

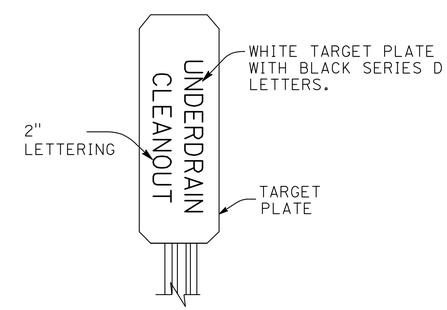

UNDERDRAIN MARKER

(FOR DETAILS NOT SHOWN
SEE STANDARD PLAN A73B)

CONSTRUCTION DETAILS

NO SCALE

C-1

STATE OF CALIFORNIA - DEPARTMENT OF TRANSPORTATION
DIVISION OF DESIGN
FUNCTIONAL SUPERVISOR: DOUGLAS S. JONES
CALCULATED-DESIGNED BY: K L BRIMHALL
CHECKED BY: L GRYBOS
REVISED BY: GMA — DATE REVISED: 12-10-08
DSJ 3-1-09

LAST REVISION 12-09-08
DATE PLOTTED => 12-APR-2010
TIME PLOTTED => 10:10

NOTES:
1. (N) NOT A SEPARATE PAY ITEM FOR INFORMATION ONLY.
2. FOR LENGTH, WIDTH AND THICKNESS OF RSP, SEE DRAINAGE PROFILES.

Dist	COUNTY	ROUTE	POST MILES TOTAL PROJECT	SHEET No.	TOTAL SHEETS
01	Men,Lak	175	Var	9	32

Mitch Andrus 6-24-09
REGISTERED CIVIL ENGINEER DATE

4-12-10
PLANS APPROVAL DATE

REGISTERED PROFESSIONAL ENGINEER
MITCH ANDRUS
No. C48753
Exp. 9-30-10
CIVIL
STATE OF CALIFORNIA

THE STATE OF CALIFORNIA OR ITS OFFICERS OR AGENTS SHALL NOT BE RESPONSIBLE FOR THE ACCURACY OR COMPLETENESS OF ELECTRONIC COPIES OF THIS PLAN SHEET.

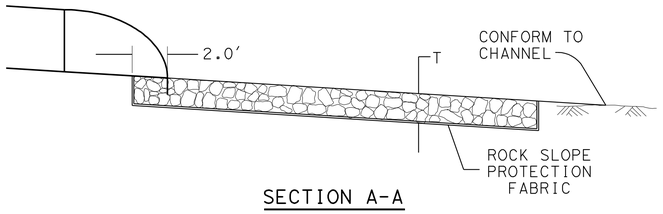

SECTION A-A

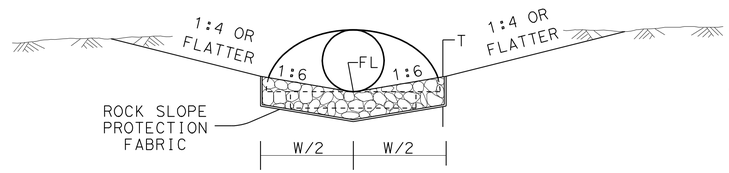

SECTION B-B

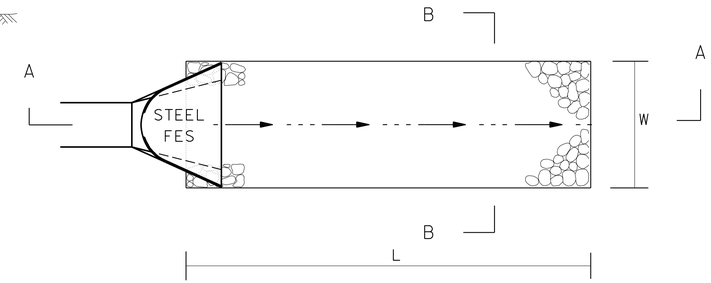

PLAN

ROCK SLOPE PROTECTION WITH STEEL FES FOR FLOW STRAIGHT IN OR STRAIGHT OUT

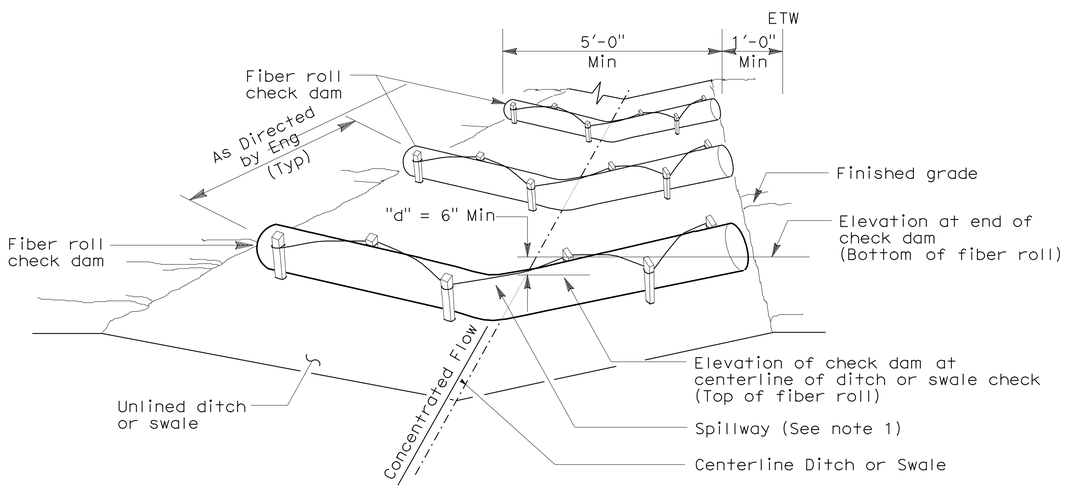

PERSPECTIVE

TEMPORARY CHECK DAM (TYPE 1)

(Total of 3 check dams shown)

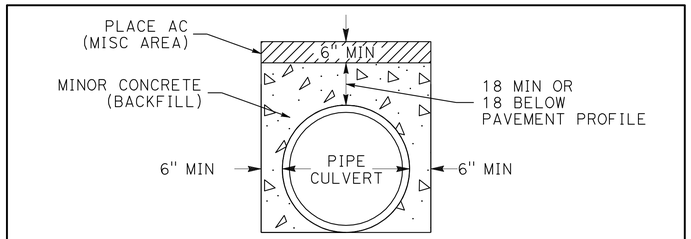

TRENCH EXCAVATION & BACKFILL DETAIL

(DIMENSIONS IN INCHES)
NO SCALE

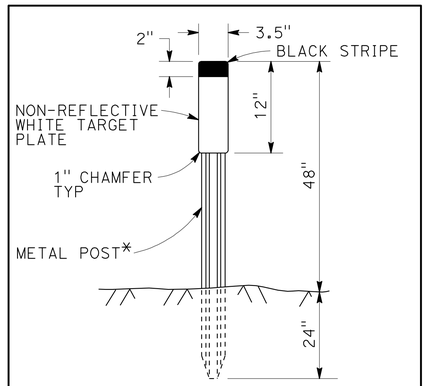

* SEE STANDARD PLAN A73B FOR METAL POST DETAILS

CULVERT MARKER

SEE SUMMARY OF QUANTITIES FOR CULVERT MARKER LOCATION
NO SCALE

DRAINAGE DETAILS
NO SCALE

DD-1

CALCULATED-DESIGNED BY	CHECKED BY	REVISED BY	DATE REVISED
DSJ	GMA		
12-10-08	12-08-08		

FUNCTIONAL SUPERVISOR: DOUGLAS S. JONES
S FOSTER
K BRIMHALL

STATE OF CALIFORNIA - DEPARTMENT OF TRANSPORTATION
DIVISION OF DESIGN

FILE PATH => P:\proj3\01\47710\drafting\147710ic001.dgn

LAST REVISION 12-06-08 | DATE PLOTTED => 12-APR-2010 | TIME PLOTTED => 10:11

Dist	COUNTY	ROUTE	POST MILES TOTAL PROJECT	SHEET No.	TOTAL SHEETS
01	Men,Lak	175	Var	10	32

Mitch Andrus 6-24-09
REGISTERED CIVIL ENGINEER DATE

4-12-10
PLANS APPROVAL DATE

REGISTERED PROFESSIONAL ENGINEER
MITCH ANDRUS
No. C48753
Exp. 9-30-10
CIVIL
STATE OF CALIFORNIA

THE STATE OF CALIFORNIA OR ITS OFFICERS OR AGENTS SHALL NOT BE RESPONSIBLE FOR THE ACCURACY OR COMPLETENESS OF ELECTRONIC COPIES OF THIS PLAN SHEET.

NOTES:

1. ALL DIMENSIONS ARE IN INCHES UNLESS OTHERWISE NOTED.
2. ALL HARDWARE TO BE GALVANIZED AFTER FABRICATION. ALL PIPE STAKES TO BE EITHER GALVANIZED AFTER FABRICATION, OR BE FABRICATED FROM PRE-GALVANIZED PIPES. IF PRE-GALVANIZED PIPE IS USED, WELD AREAS SHALL BE CLEANED AND PAINTED WITH ZINC-RICH PRIMER.
3. ¾" DIA CABLE SHOWN, ½" DIA CABLE IS ALLOWABLE FOR PIPE DOWNDRAIN DIAMETERS OF 8" TO 15". USE 1-1/2" DIMENSION FOR ¾" CABLE AND 1-1/4" DIMENSION FOR ½" CABLE.
4. CABLE SHALL NOT CONTACT SOIL IN FINISHED POSITION. EITHER ADJUST POSITION, OR REPLACE AFFECTED PORTION OF CABLE WITH GALVANIZED STEEL ROD OF EQUIVALENT DIAMETER.
5. SEE STANDARD PLAN D87A FOR CORRUGATED METAL PIPE DOWNDRAIN ANCHOR ASSEMBLY.

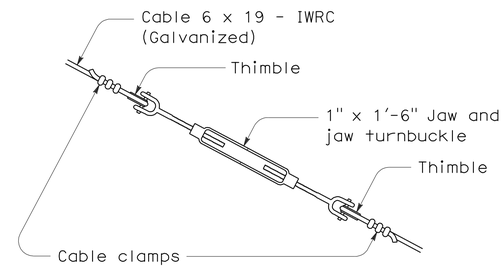

DETAIL A

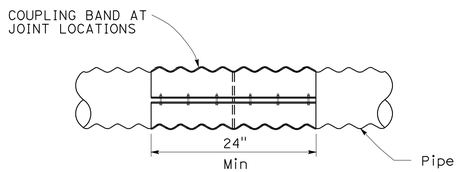

JOINT COUPLING BAND

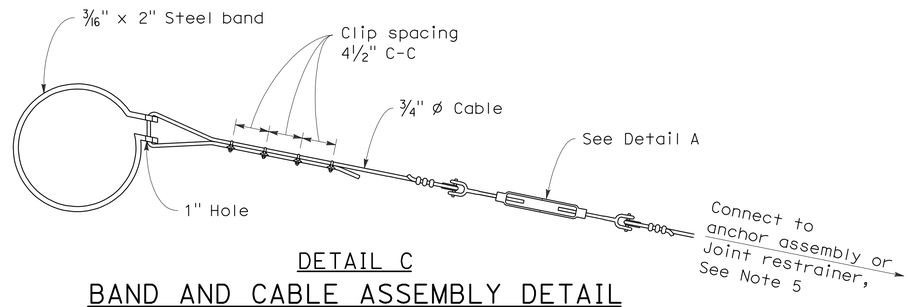

DETAIL C

BAND AND CABLE ASSEMBLY DETAIL FOR CABLE ANCHORAGE SYSTEM

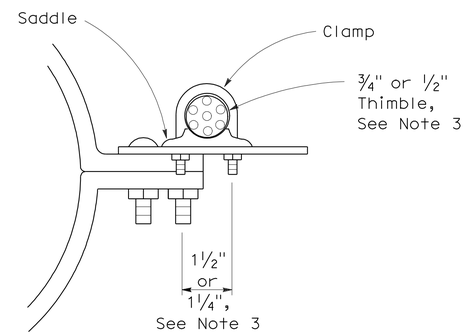

END VIEW

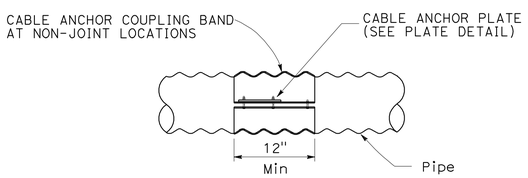

CABLE ANCHOR COUPLING BAND

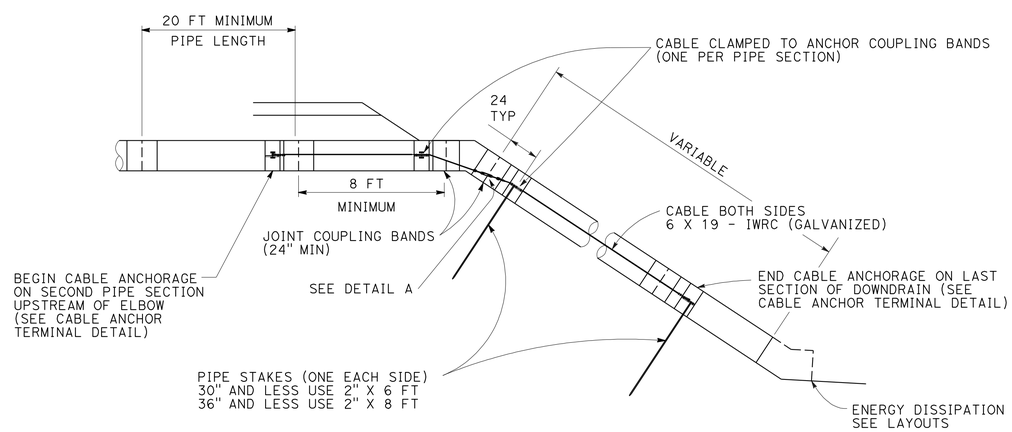

ANCHOR ASSEMBLY SYSTEM (MODIFIED)

ROUTE 175

DRAINAGE SYSTEM No.	LOCATION PM
1	5.90

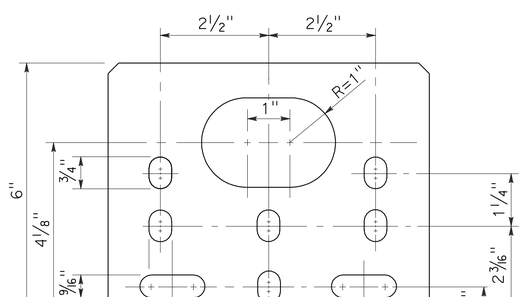

PLATE DETAIL

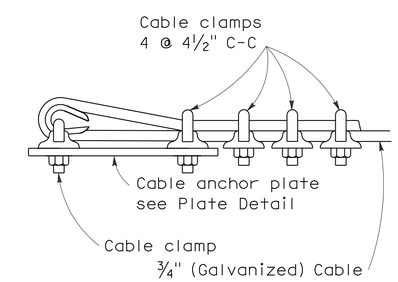

CABLE ANCHOR TERMINAL DETAIL

DRAINAGE DETAILS
NO SCALE
DD-2

REVISED BY	DATE REVISED
DSJ	12-10-08
GMA	12-08-08

CALCULATED-DESIGNED BY: S FOSTER
CHECKED BY: K BRIMHALL
FUNCTIONAL SUPERVISOR: DOUGLAS S. JONES

STATE OF CALIFORNIA - DEPARTMENT OF TRANSPORTATION
DIVISION OF DESIGN
Caltrans

FILE PATH => P:\proj3\01\47710\drafting\147710ic002.dgn

LAST REVISION 12-06-08 | DATE PLOTTED => 12-APR-2010 | TIME PLOTTED => 10:11

Dist	COUNTY	ROUTE	POST MILES TOTAL PROJECT	SHEET No.	TOTAL SHEETS
01	Men,Lak	175	Var	11	32

Mitch Andrus 6-24-09
REGISTERED CIVIL ENGINEER DATE

4-12-10
PLANS APPROVAL DATE

REGISTERED PROFESSIONAL ENGINEER
MITCH ANDRUS
No. C48753
Exp. 9-30-10
CIVIL
STATE OF CALIFORNIA

THE STATE OF CALIFORNIA OR ITS OFFICERS OR AGENTS SHALL NOT BE RESPONSIBLE FOR THE ACCURACY OR COMPLETENESS OF ELECTRONIC COPIES OF THIS PLAN SHEET.

	LAYOUT SHEET No.	LAYOUT PROFILE SHEET No.	DRAINAGE SYSTEM No. ⬡	DRAINAGE UNIT ◯	REMOVE ITEMS: REMOVE CULVERT EA	REMOVE ITEMS: REMOVE INLET EA	REMOVE ITEMS: REMOVE DOWNDRAIN EA	MISC ITEMS: (N) 24" ANCHOR ASSEMBLY LF	MISC ITEMS: 36" CORRUGATED STEEL PIPE INLET LF	APC: 24" ALTERNATIVE PIPE CULVERT LF	SFES: 24" STEEL FLARED END SECTION EA	RSP: RSP (LIGHT, METHOD B) CY	RSP: RSP FABRIC SQYD	MISCELLANEOUS IRON AND STEEL LB	DRAINAGE PLAN SHEET No.	DRAINAGE PROFILE SHEET No.	DRAINAGE SYSTEM No. ⬡	DRAINAGE UNIT ◯	STATION	DESCRIPTION	
LOCATION 1	1	1	1	a					4					236	1	1	1	a	"L1" 13+09.00	GMP DI	LOCATION 1
				b		1												b		REMOVE DI	
				c						37.5								c		24" x 37.5' APC	
				d				55.4		55.4								d		24" ANCHOR ASSEMBLY	
				e						5.0								e		24" x 5.0' APC ELBOW	
				f	1													f		REMOVE CULVERT (24" x 65.8' CMP)	
				g						27.5								g		24" x 27.5' APC	
				h							1							h		SFES	
				i								4.7	16					i		RSP (LIGHT, METHOD B)	
LOCATION 3	3	3	2	a	1										3	3	2	a	"L3" 12+36.53	REMOVE CULVERT (18" x 43.2' CMP)	LOCATION 3
				b					4					236				b		GMP DI	
				c						37.5								c		24" x 37.5' APC	
				d						5.0								d		24" x 5.0' APC ELBOW	
				e						2.5								e		24" x 2.5' APC	
				f							1							f		SFES	
				g			1											g		REMOVE DOWNDRAIN (12" x 12.0' CMP)	
				h								4.7	16					h		RSP (LIGHT, METHOD B)	
LOCATION 5	6	6	3	a					4					236	6	6	3	a	"L5" 15+46.36	GMP DI	LOCATION 5
				b		1												b		REMOVE DI	
				c						40.0								c		24" x 40.0' APC	
				d								4.7	16					d		RSP (LIGHT, METHOD B)	
				e	1													e		REMOVE CULVERT (18" x 43.2' CMP)	
				f							1							f		SFES	
SHEET TOTAL					3	2	1	55.4	12	210.4	3	14.1	48	708							

(N) NOT A SEPARATE PAY ITEM, FOR INFORMATION ONLY.

APC ALLOWABLE PIPE MATERIAL

DESCRIPTION	TYPE: GALVANIZED, CORRUGATED STEEL PIPE (CSP, Galv) 0.168" THICK (8 GAGE)	TYPE: PLASTIC PIPE TYPE S• (HDPE)	TYPE: REINFORCED CONCRETE PIPE+ (RCP)
24" APC	ALLOWABLE	ALLOWABLE	ALLOWABLE
LOCATION 1	YES	YES	YES
LOCATION 3	YES	YES	YES*
LOCATION 5	YES	YES	YES*

• TYPE S = SMOOTH INTERIOR; CAN NOT BE USED AS TAPERED INLET OR DOWNDRAIN
+ MUST UTILIZE TYPE II MODIFIED OR TYPE IP MODIFIED CEMENT
* THE MAXIMUM WATER-TO-CEMENT RATIO SHALL BE 0.45

DRAINAGE QUANTITIES

DQ-1

DSJ	12-10-08
GORDO	12-08-08
REVISED BY	DATE REVISED
S FOSTER	K BRIMHALL
CALCULATED-DESIGNED BY	CHECKED BY
FUNCTIONAL SUPERVISOR	DOUGLAS S. JONES

STATE OF CALIFORNIA - DEPARTMENT OF TRANSPORTATION
Caltrans
DIVISION OF DESIGN

FILE PATH => P:\proj3\01\47710_plans\pse\resubmit\147710id001.dgn

LAST REVISION 12-06-08 | DATE PLOTTED => 12-APR-2010 | TIME PLOTTED => 10:35

Dist	COUNTY	LOCATION CODE	POST MILES TOTAL PROJECT	SHEET No.	TOTAL SHEETS
01	Men,Lak	175	Var	12	32

Mitch Andrus 6-24-09
REGISTERED CIVIL ENGINEER DATE

4-12-10
PLANS APPROVAL DATE

REGISTERED PROFESSIONAL ENGINEER MITCH ANDRUS No. C48753 Exp. 9-30-10 CIVIL STATE OF CALIFORNIA

THE STATE OF CALIFORNIA OR ITS OFFICERS OR AGENTS SHALL NOT BE RESPONSIBLE FOR THE ACCURACY OR COMPLETENESS OF ELECTRONIC COPIES OF THIS PLAN SHEET.

STATIONARY MOUNTED CONSTRUCTION AREA SIGNS

SIGN LETTER	SIGN CODE	PANEL SIZE	SIGN MESSAGE	NUMBER OF POSTS AND SIZE	NUMBER OF SIGNS	HIGHWAY POST LOCATION
A	G20-1	36" x 18"	ROAD WORK NEXT 2 MILES	1 - 4" x 4"	2	Men 5.40 (FNBT) Men 7.00 (FSBT)
B	G20-2	48" x 24"	END ROAD WORK	1 - 4" x 6"	4	Men 5.78 (FSBT) Men 6.62 (FNBT) Men 9.09 (FSBT) Lak 1.07 (FNBT)
C	C40(Mod)(CA)	48" x 36"	TRAFFIC FINES DOUBLED IN WORK ZONES	1 - 4" x 6"	4	Men 5.52 (FNBT) Men 6.86 (FSBT) Men 8.90 (FNBT) Lak 1.18 (FSBT)
D	W11-1 W16-1	30" x 30" 36" x 24"	BICYCLE SYMBOL SIGN SHARE THE ROAD	1 - 4" x 6"	4	Men 5.60 (FNBT) Men 6.71 (FSBT) Men 9.04 (FNBT) Lak 1.10 (FSBT)
E	G20-1	36" x 18"	ROAD WORK NEXT 3 MILES	1 - 4" x 4"	2	Men 8.79 (FNBT) Lak 1.29 (FSBT)

LEGEND:

- SIGN - SINGLE POST
- SIGN - TWO POST
- (CA) CALIFORNIA SIGN CODE

NOTES:

1. HIGHWAY POST VALUES GIVEN ARE APPROXIMATE. EXACT SIGN LOCATIONS TO BE DETERMINED BY THE ENGINEER.
2. ALL SIGN CODES SHOWN ARE FEDERAL SIGN CODES UNLESS OTHERWISE DESIGNATED AS CALIFORNIA SIGN CODES.
3. RETROREFLECTIVE ORANGE BACKGROUND WITH BLACK LEGEND AND BORDER.
4. RETROREFLECTIVE WHITE BACKGROUND WITH BLACK LEGEND AND BORDER.

(A) G20-1

ROAD WORK NEXT 2 MILES — 4" C

36" x 18"

SEE NOTE 3.

(C) C40(Mod)<CA>

TRAFFIC FINES DOUBLED IN WORK ZONES — 4" D

48" x 36"

SEE NOTE 4.

(D) W11-1 W16-1

30"X30"

SHARE THE ROAD — 4" D

36" x 24"

SEE NOTE 3.

(E) G20-1

ROAD WORK NEXT 3 MILES — 4" C

36" x 18"

SEE NOTE 3.

SIGN DETAILS

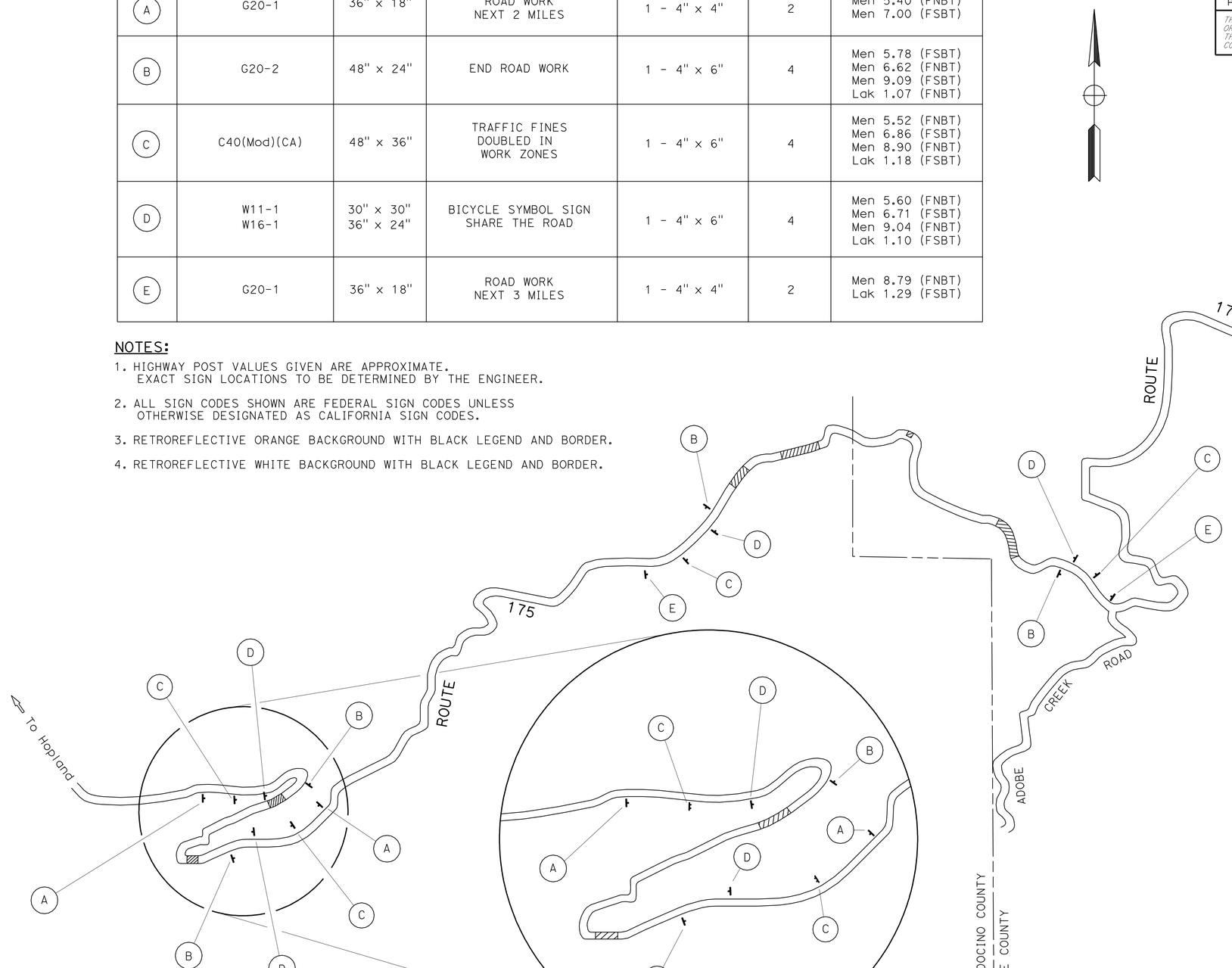

THIS PLAN ACCURATE FOR CONSTRUCTION AREA SIGN WORK ONLY

CONSTRUCTION AREA SIGNS

NO SCALE

CS-1

STATE OF CALIFORNIA - DEPARTMENT OF TRANSPORTATION
DIVISION OF DESIGN
Caltrans

FUNCTIONAL SUPERVISOR: DOUGLAS S. JONES
CALCULATED-DESIGNED BY: M HAJRY
CHECKED BY: K L GRIMHALL
REVISED BY
DATE REVISED

LAST REVISION 06-22-09
DATE PLOTTED => 12-APR-2010
TIME PLOTTED => 10:32

Dist	COUNTY	LOCATION CODE	POST MILES TOTAL PROJECT	SHEET No.	TOTAL SHEETS
01	Men,Lak	175	Var	13	32

Mitch Andrus 6-24-09
REGISTERED CIVIL ENGINEER DATE

4-12-10
PLANS APPROVAL DATE

REGISTERED PROFESSIONAL ENGINEER
MITCH ANDRUS
No. C48753
Exp. 9-30-10
CIVIL
STATE OF CALIFORNIA

THE STATE OF CALIFORNIA OR ITS OFFICERS OR AGENTS SHALL NOT BE RESPONSIBLE FOR THE ACCURACY OR COMPLETENESS OF ELECTRONIC COPIES OF THIS PLAN SHEET.

LEGEND

LIMIT OF STRIPING PATTERN

No PAVEMENT DELINEATION DETAIL NUMBER

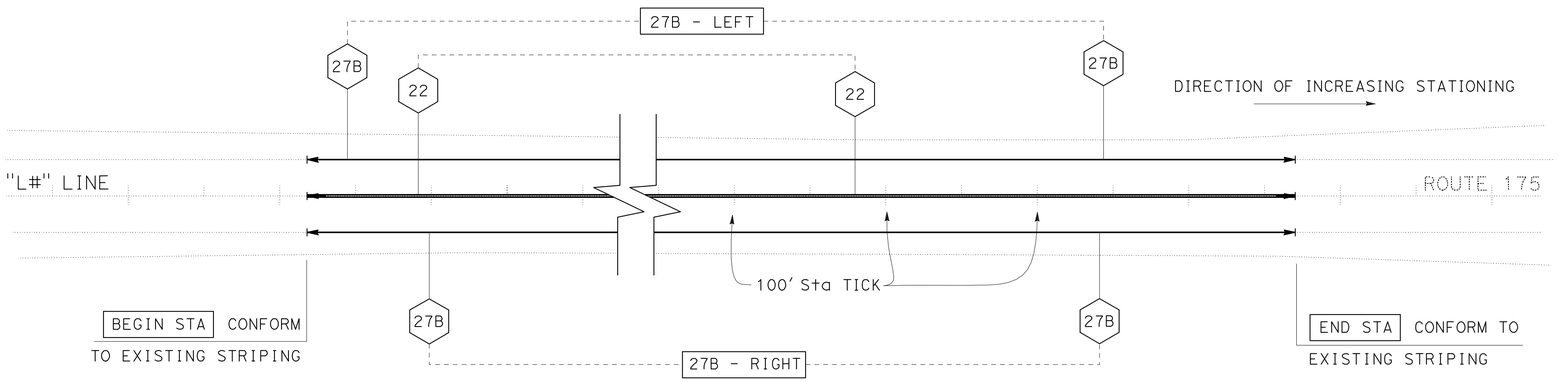

TYPICAL PAVEMENT DELINEATION DETAIL

ALL LOCATIONS

LOCATION					27B		22
COUNTY	PM	SHT No.	BEGIN STA	END STA	27B - LEFT (LF)	27B - RIGHT (LF)	(LF)
Men	5.90	L-1	"L1" 12+25.00	"L1" 14+00.00	175.00	175.00	175.00
Men	6.48	L-2	"L2" 11+50.00	"L2" 13+00.00	150.00	150.00	150.00
Men	9.25	L-3	"L3" 10+25.00	"L3" 14+00.00	375.00	375.00	375.00
Men	9.40	L-4	"L3" 17+00.00	"L3" 21+50.00	450.00	450.00	450.00
Lak	0.20	L-5	"L4" 12+00.00	"L4" 13+00.00	100.00	100.00	100.00
Lak	0.80	L-6	"L5" 12+00.00	"L5" 16+00.00	400.00	400.00	400.00
				SUB TOTAL	1650.00	1650.00	1650.00
				TOTAL	3300		3300*

* SUBTOTAL MULTIPLIED BY 2 FOR THE DOUBLE YELLOW STRIPE TOTAL.

PAVEMENT MARKER
(RETROREFLECTIVE - RECESSED)

DETAIL NUMBER	TYPE D (EA)
22	466
TOTAL	466

THERMOPLASTIC TRAFFIC STRIPE
(SPRAYABLE)

DETAIL NUMBER	QTY (LF)
27B	3300
TOTAL	3300

4" THERMOPLASTIC TRAFFIC STRIPE

DETAIL NUMBER	QTY (LF)
22	3300
TOTAL	3300

THIS PLAN ACCURATE FOR PAVEMENT DELINEATION ONLY.

PAVEMENT DELINEATION DETAILS AND QUANTITIES

NO SCALE

PD-1

STATE OF CALIFORNIA - DEPARTMENT OF TRANSPORTATION
DIVISION OF DESIGN
Caltrans

FUNCTIONAL SUPERVISOR: DOUGLAS S. JONES
CALCULATED-DESIGNED BY: M HAURY
CHECKED BY: K L BRIMHALL
REVISED BY
DATE REVISED

LAST REVISION 01-27-09
DATE PLOTTED => 12-APR-2010
TIME PLOTTED => 10:39

Dist	COUNTY	LOCATION CODE	POST MILES TOTAL PROJECT	SHEET No.	TOTAL SHEETS
01	Men,Lak	175	Var	14	32

Mitch Andrus 6-24-09
REGISTERED CIVIL ENGINEER DATE

4-12-10
PLANS APPROVAL DATE

REGISTERED PROFESSIONAL ENGINEER MITCH ANDRUS No. C48753 Exp. 9-30-10 CIVIL STATE OF CALIFORNIA

THE STATE OF CALIFORNIA OR ITS OFFICERS OR AGENTS SHALL NOT BE RESPONSIBLE FOR THE ACCURACY OR COMPLETENESS OF ELECTRONIC COPIES OF THIS PLAN SHEET.

EARTHWORK SUMMARY

STATION TO STATION		ROADWAY EXCAVATION (CY)	ROADWAY EMBANKMENT (N) (CY)	IMPORTRED BORROW (CY)
"L1" 12+25.00	"L1" 14+00.00	294	10	0
"L2" 11+50.00	"L2" 13+00.00	428	11	0
"L3" 10+25.00	"L3" 14+00.00	616	65	0
"L3" 17+00.00	"L3" 21+50.00	1174	50	0
"L4" 12+00.00	"L4" 12+00.00	122	10	0
"L5" 12+00.00	"L5" 16+00.00	852	305	0
	TOTAL:	3486	451	0

(N) NOT A SEPARATE PAY ITEM, FOR INFORMATION ONLY.

ROADWAY QUANTITIES SUMMARY

STATION TO STATION		CLASS 2 AGGREGATE BASE (CY)	HOT MIX ASPHALT (TYPE A) (TON)
"L1" 12+25.00	"L1" 14+00.00	236	132
"L2" 11+50.00	"L2" 13+00.00	76	152
"L3" 10+25.00	"L3" 14+00.00	487	273
"L3" 17+00.00	"L3" 21+50.00	444	214
"L4" 12+00.00	"L4" 12+00.00	69	34
"L5" 12+00.00	"L5" 16+00.00	470	263
	TOTAL:	1782	1034

GEOSYNTHETIC REINFORCED EMBANKMENT

STATION TO STATION				GEOSYNTHETIC REINFORCED EMBANKMENT (N) (CY)	GEOSYNTHETIC REINFORCEMENT (SQYD)
R+	"L2" 11+50.00	R+	"L2" 12+50.00	824	830
L+	"L3" 19+00.00	L+	"L3" 21+00.00	2262	1807
L+	"L5" 12+00.00	L+	"L5" 16+00.00	411	1013
			TOTAL:	3497	3650

(N) NOT A SEPARATE PAY ITEM, FOR INFORMATION ONLY.

GEOSYNTHETIC REINFORCEMENT QUANTITY INCLUDES GEOSYNTHETIC REINFORCEMENT FABRIC, EMBANKMENT MATERIAL AND PLACEMENT. SEE SPECIAL PROVISIONS.

8" ALTERNATIVE PIPE UNDERDRAIN

STATION TO STATION				QUANTITY (LF)
L+	"L1" 14+00.00	L+	"L1" 13+10.30	86
R+	"L3" 12+39.80	R+	"L3" 14+00.00	158
R+	"L3" 17+91.00	R+	"L3" 21+49.00	353
R+	"L5" 12+00.00	R+	"L5" 15+44.84	335
			SUB TOTAL:	932
8" APU RISERS			SUB TOTAL:	60
			TOTAL:	992

UNDERDRAIN QUANTITY INCLUDES FILTER FABRIC, PERMEABLE MATERIAL AND PLACEMENT. SEE SPECIAL PROVISIONS.

8" APU RISERS

STATION		DESCRIPTION	QUANTITY (LF)
L+	"L1" 14+00.00	TERMINAL RISER	10
R+	"L3" 14+00.00	TERMINAL RISER	10
R+	"L3" 19+50.00	45° RISER	10
R+	"L3" 21+50.00	TERMINAL RISER	10
R+	"L5" 12+00.00	TERMINAL RISER	10
R+	"L5" 14+00.00	45° RISER	10
		TOTAL:	60*

* : QUANTITY INCLUDED IN 8" APU TOTAL.

UNDERDRAIN MARKER

STATION		QTY (EA)
L+	"L1" 13+09.00	1
R+	"L3" 12+38.12	1
R+	"L3" 15+46.36	1
R+	"L3" 13+09.00	1
R+	"L5" 12+38.12	1
R+	"L5" 15+46.36	1
	TOTAL:	6

REMOVE METAL BEAM GUARD RAILING

STATION TO STATION		QUANTITY (LF)
L+ "L3" 16+50.00	L+ "L3" 19+90.00	339
L+ "L5" 16+50.00	L+ "L5" 19+90.00	287
	TOTAL:	626

METAL BEAM GUARD RAILING (WOOD POST)

STATION TO STATION		QUANTITY (LF)	ALTERNATIVE FLARE TERMINAL SYSTEM (EA)
L+ "L3" 16+50.00	L+ "L3" 20+00.00	348	2
L+ "L5" 12+00.00	L+ "L5" 14+10.87	260	1
	TOTAL:	608	3

WEED CONTROL MAT (FIBER)

STATION TO STATION		QUANTITY (SQYD)
L+ "L3" 16+50.00	L+ "L3" 20+00.00	117
L+ "L5" 12+00.00	L+ "L5" 14+91.32	100
	TOTAL:	217

MARKER (CULVERT)

DRAINAGE SYSTEM	STATION		QTY (EA)
1	L+	"L1" 13+09.00	1
2	R+	"L3" 12+38.12	1
3	L+/R+	"L5" 15+46.36	2
		TOTAL:	4

TEMPORARY FENCE (TYPE ESA)

AREA No. (No.)	SHEET No.	LENGTH (LF)
1	L-1	164
2	L-1	142
	TOTAL:	306

TEMPORARY CONSTRUCTION ENTRANCE

5 EA

TEMPORARY FIBER ROLL (TYPE 1)

1900 LF

TEMPORARY CHECK DAM (TYPE 1)

100 LF

EROSION CONTROL (TYPE D)

STATION TO STATION				QUANTITY (SQYD)	STRAW (N) (TON)	FIBER (N) (LBS)	COMPOST (N) (CY)	PURE LIVE SEED (N) (LBS)	STABILIZING EMULSION (N) (LBS)
R+	"L1" 12+25.00	R+	"L1" 14+00.00	200	0.17	90.87	0.17	6.28	5.16
R+	"L2" 11+25.00	R+	"L2" 12+50.00	170	0.14	77.24	0.14	5.34	4.39
L+	"L3" 10+50.00	L+	"L3" 14+00.00	100	0.08	45.44	0.08	3.14	2.58
L+	"L3" 19+00.00	L+	"L3" 21+00.00	475	0.39	215.82	0.39	14.91	12.26
L+	"L5" 12+00.00	L+	"L5" 16+00.00	750	0.62	170.38	0.31	23.54	43.76
			TOTAL:	1695	1.40	599.75	1.09	53.21	68.15

(N) NOT A SEPARATE PAY ITEM, FOR INFORMATIONAL PURPOSES ONLY.

SUMMARY OF QUANTITIES

Q-1

STATE OF CALIFORNIA - DEPARTMENT OF TRANSPORTATION
Caltrans DIVISION OF DESIGN

FUNCTIONAL SUPERVISOR: DOUGLAS S. JONES

CALCULATED-DESIGNED BY: K L BRIMHALL — DSJ 3-1-09
CHECKED BY: L GRYBOS — GMA 12-10-08
REVISED BY — DATE REVISED

LAST REVISION 12-09-08 — DATE PLOTTED => 12-APR-2010 — TIME PLOTTED => 10:32

DIST	COUNTY	ROUTE	POST MILES TOTAL PROJECT	SHEET NO.	TOTAL SHEETS
01	Men,Lak	175	Var	15	32

REGISTERED CIVIL ENGINEER

November 17, 2006
PLANS APPROVAL DATE

REGISTERED PROFESSIONAL ENGINEER
Dallas Forester
No. C37765
Exp. 12-31-06
CIVIL
STATE OF CALIFORNIA

The State of California or its officers or agents shall not be responsible for the accuracy or completeness of electronic copies of this plan sheet.

To accompany plans dated 4-12-10

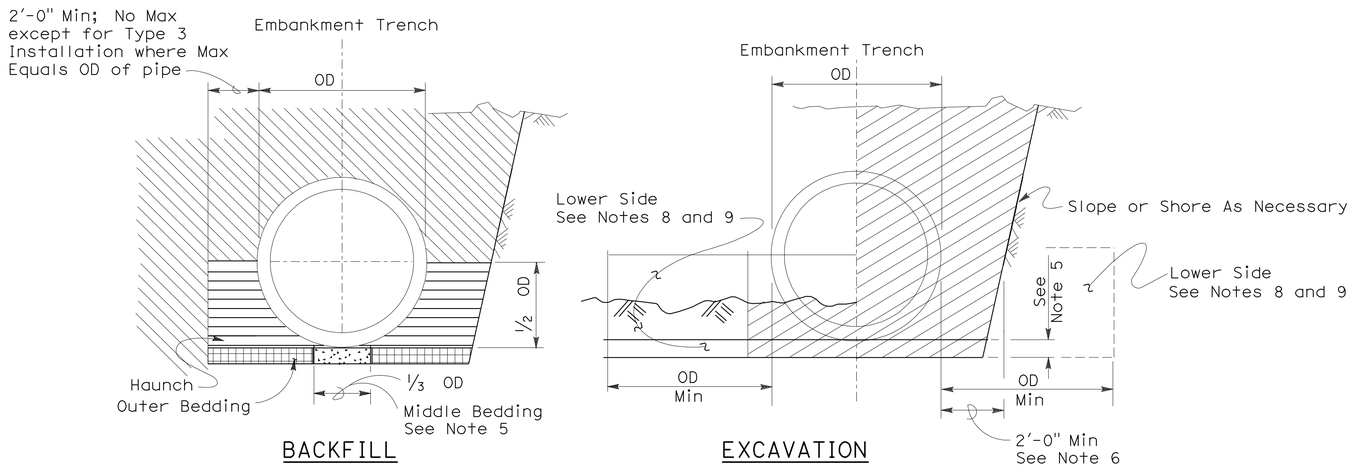

Roadway Embankment

Structure Backfill (Culvert) See Note 6

Structure Backfill (Culvert) See Note 6

Loose Backfill

Excavation Structure (Culvert)

TYPE 1 INSTALLATION:

The haunch and outer bedding shall be compacted to a minimum 90 percent relative compaction. In addition, the minimum sand equivalent in these areas shall be 30 and the maximum percentage passing the 75 μm sieve size shall be 12.

TYPE 2 INSTALLATION:

The haunch and outer bedding shall be compacted to a minimum 90 percent relative compaction. In addition, the minimum sand equivalent in these areas shall be 25.

TYPE 3 INSTALLATION:

The haunch and outer bedding shall be compacted to a minimum 85 percent relative compaction. 90 percent relative compaction will be required where the fill over the pipe is less than 4'-0" or 1/2 OD.

NOTES:

1. Unless otherwise shown on the plans or specified in the special provision, the Contractor shall have the option of selecting the class of RCP and the type of installation to be used, provided the height of cover does not exceed the value shown for the RCP selected.
   Example: 24" RCP culvert with maximum cover of 19'-0" the options are:
   a) Class III or stronger with Installation Type 1.
   b) Class III Special or stronger with Installation Type 2.
   c) Class IV Special or stronger with Installation Type 3.
   Cover is defined as the maximum vertical distance from top of the pipe to finished grade within the length of any given culvert.
2. The class of RCP and Installation Type selected shall be the same throughout the length of any given culvert.
3. The "length of any culvert" is defined as the culvert between:
   a) Successive drainage structure (inlets, junction boxes, headwalls, etc.).
   b) A drainage structure and the inlet or outlet end of the culvert.
   c) The inlet and outlet end of the culvert when there are no intervening drainage structures.
4. Oval and arch shaped RCP shall not be used.
5. 1/25 OD Min, not less than 3".
6. Slurry cement backfill may be substituted for backfill in the outer bedding and haunch areas. If slurry is used the outer and middle beddings shall be omitted. Prior to installation the soil under the middle 1/3 of the outside diameter of the pipe shall be softened by scarifying or other means to a minimum depth of 1/25 OD, but not less than 3". Where slurry cement backfill is used clear distance to trench wall may be reduced as set forth in Section 19-3.062 of the Standard Specifications.
7. Backfill shall be placed full width of excavation except where dimensions are shown for backfill width or thickness. Dimensions shown are minimums.
8. Lower side shall be suitable material as determined by the Engineer. Otherwise it shall be considered unsuitable as set forth in Section 19-2.02 of the Standard Specifications. See Note 9.
9. Where the pipe is placed in a trench, if the trench walls are sloped at 5 vertical to 1 horizontal or steeper for at least 90 percent of the trench height or up to not less than 12" from the grading plane, the firmness of the soil in the lower side need not be considered.
10. Non-reinforced precast concrete pipe sizes 3'-0" or smaller may be placed under installation Types 1, 2 or 3.

INSTALLATION TYPE 1

MINIMUM CLASS AND D-LOAD	COVER	
	108" Dia AND SMALLER	OVER 108" Dia
Class II 1000D	14.9'	12.9'
Class III 1350D	15.0' - 20.9'	13.0' - 18.9'
Class III Special 1700D	21.0' - 26.9'	19.0' - 24.9'
Class IV 2000D	27.0' - 31.9'	25.0' - 29.9'
Class IV Special 2500D	32.0' - 40.9'	30.0' - 38.9'
Class V 3000D	41.0' - 49.9'	39.0' - 46.9'
Class V Special 3600D	50.0' - 59.0'	47.0' - 58.0'

INSTALLATION TYPE 2

MINIMUM CLASS AND D-LOAD	COVER
Class II 1000D	9.9'
Class III 1350D	10.0'- 14.9'
Class III Special 1700D	15.0' - 19.9'
Class IV 2000D	20.0' - 24.9'
Class IV Special 2500D	25.0' - 31.9'
Class V 3000D	32.0' - 38.9'
Class V Special 3600D	39.0' - 47.0'

INSTALLATION TYPE 3

MINIMUM CLASS AND D-LOAD	COVER	
	48" Dia AND SMALLER	OVER 48" Dia
Class II 1000D	7.9'	5.9'
Class III 1350D	8.0' - 10.9'	6.0' - 8.9'
Class III Special 1700D	11.0' - 14.9'	9.0' - 12.9'
Class IV 2000D	15.0' - 17.9'	13.0' - 15.9'
Class IV Special 2500D	18.0' - 21.9'	16.0' - 19.9'
Class V 3000D	22.0' - 26.9'	20.0' - 24.9'
Class V Special 3600D	30.0' - 33.0'	25.0' - 31.0'

STATE OF CALIFORNIA
DEPARTMENT OF TRANSPORTATION

EXCAVATION AND BACKFILL CONCRETE PIPE CULVERTS

NO SCALE

RSP A62DA DATED NOVEMBER 17, 2006 SUPERSEDES STANDARD PLAN A62DA DATED MAY 1, 2006 - PAGE 20 OF THE STANDARD PLANS BOOK DATED MAY 2006.

REVISED STANDARD PLAN RSP A62DA

2006 REVISED STANDARD PLAN RSP A62DA

10-26-06

DIST	COUNTY	ROUTE	POST MILES TOTAL PROJECT	SHEET NO.	TOTAL SHEETS
01	Men,Lak	175	Var	16	32

Randell D. Hiatt
REGISTERED CIVIL ENGINEER

October 20, 2006
PLANS APPROVAL DATE

REGISTERED PROFESSIONAL ENGINEER
Randell D. Hiatt
No. C50200
Exp. 6-30-07
CIVIL
STATE OF CALIFORNIA

The State of California or its officers or agents shall not be responsible for the accuracy or completeness of electronic copies of this plan sheet.

To accompany plans dated 4-12-10

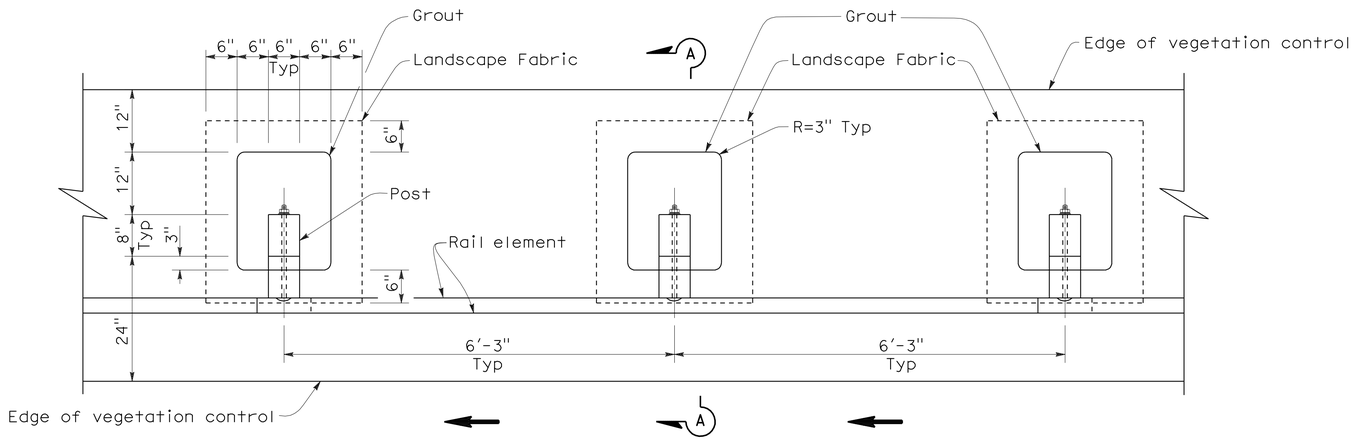

PLAN

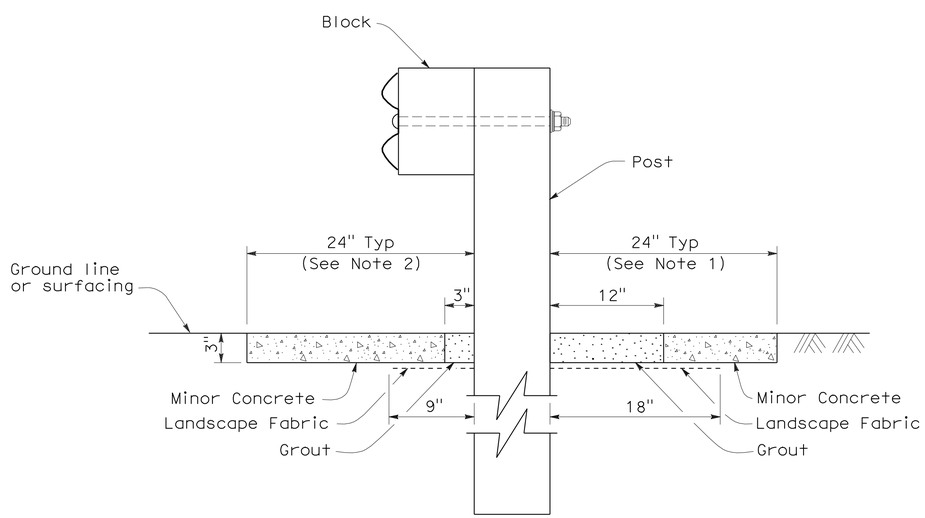

SECTION A-A

NOTES:

1. Where the distance between back of post and hinge point is less than 24", vegetation control to be constructed flush with the back edge of the post.
2. Where dike is constructed under railing, construct vegetation control to back edge of dike. Where paved shoulder is constructed within 24" in front of the post, construct vegetation control to the edge of paved shoulder.
3. Direction of adjacent traffic indicated by ← .

STATE OF CALIFORNIA
DEPARTMENT OF TRANSPORTATION

METAL BEAM GUARD RAILING TYPICAL VEGETATION CONTROL STANDARD RAILING SECTION

NO SCALE

NSP A77C5 DATED OCTOBER 20, 2006 SUPPLEMENTS THE STANDARD PLANS BOOK DATED MAY 2006.

NEW STANDARD PLAN NSP A77C5

2006 NEW STANDARD PLAN NSP A77C5

DIST	COUNTY	ROUTE	POST MILES TOTAL PROJECT	SHEET NO.	TOTAL SHEETS
01	Men,Lak	175	Var	17	32

Randell D. Hiatt
REGISTERED CIVIL ENGINEER

October 20, 2006
PLANS APPROVAL DATE

REGISTERED PROFESSIONAL ENGINEER
Randell D. Hiatt
No. C50200
Exp. 6-30-07
CIVIL
STATE OF CALIFORNIA

The State of California or its officers or agents shall not be responsible for the accuracy or completeness of electronic copies of this plan sheet.

To accompany plans dated 4-12-10

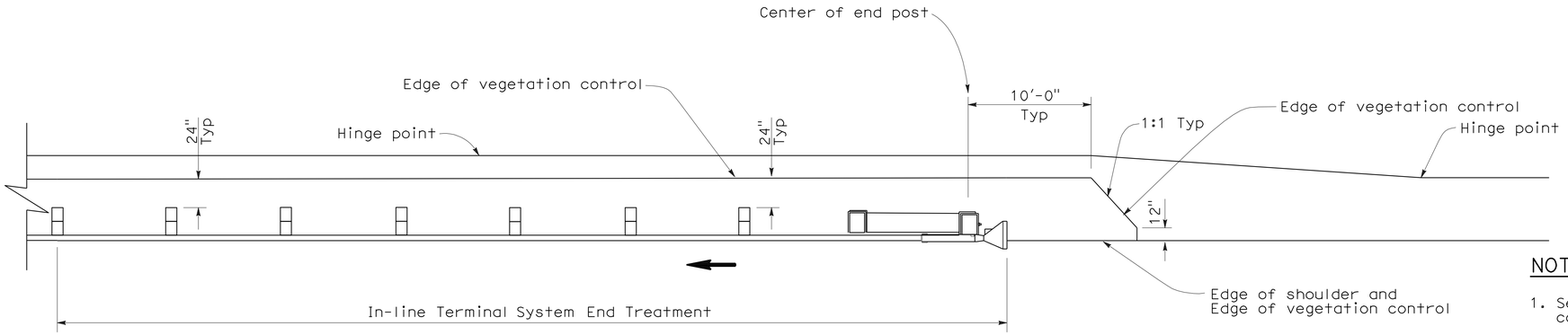

PLAN

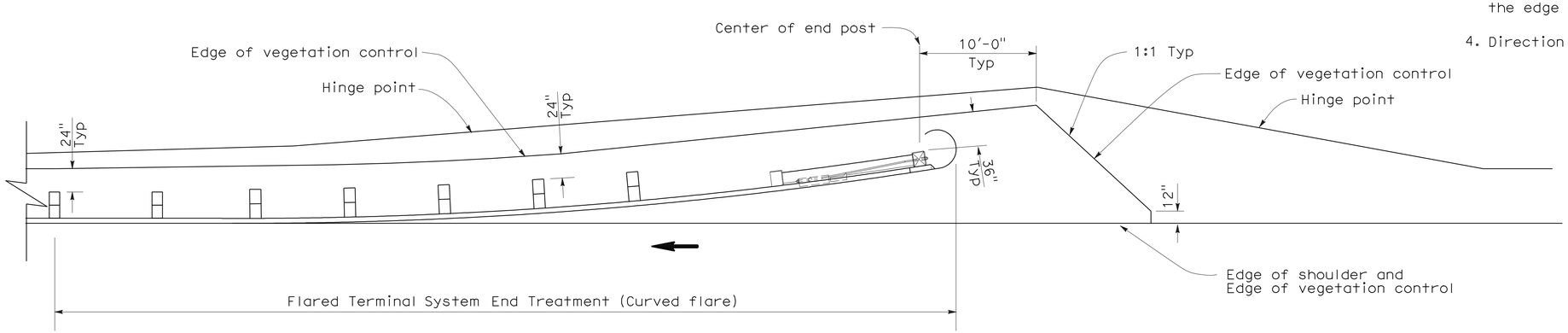

PLAN

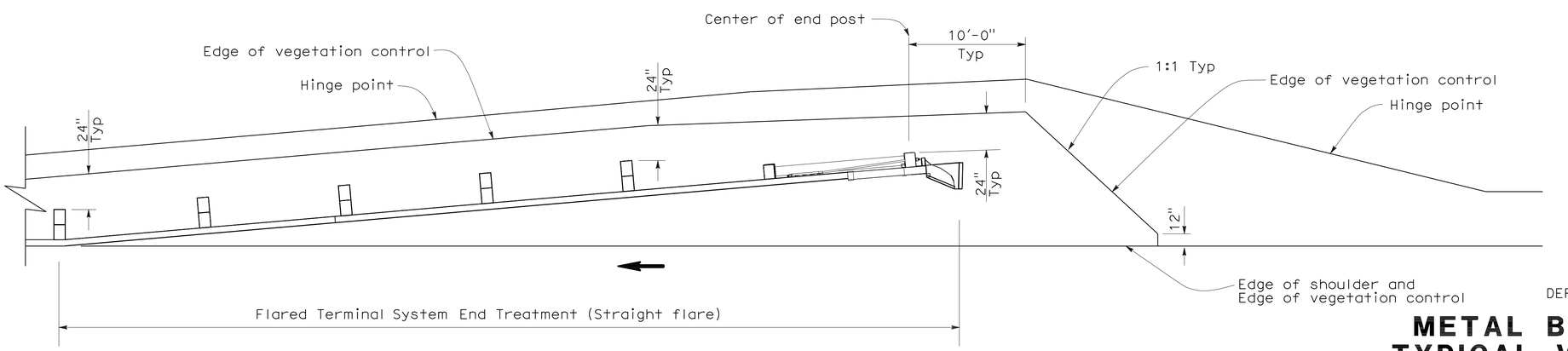

PLAN

NOTES:

1. See New Standard Plan NSP A77C5 for additional vegetation control details.
2. Where the distance between back of post and hinge point is less than 24", vegetation control to be constructed flush with the back edge of the post.
3. Where dike is constructed under railing, construct vegetation control to back edge of dike. Where paved shoulder is constructed within 24" in front of the post, construct vegetation control to the edge of paved shoulder.
4. Direction of adjacent traffic indicated by ←.

STATE OF CALIFORNIA
DEPARTMENT OF TRANSPORTATION

METAL BEAM GUARD RAILING TYPICAL VEGETATION CONTROL FOR TERMINAL SYSTEM END TREATMENTS

NO SCALE

NSP A77C6 DATED OCTOBER 20, 2006 SUPPLEMENTS THE STANDARD PLANS BOOK DATED MAY 2006.

NEW STANDARD PLAN NSP A77C6

2006 NEW STANDARD PLAN NSP A77C6

7-17-06

DIST	COUNTY	ROUTE	POST MILES TOTAL PROJECT	SHEET NO.	TOTAL SHEETS
01	Men,Lak	175	Var	18	32

Randell D. Hiatt
REGISTERED CIVIL ENGINEER

June 6, 2008
PLANS APPROVAL DATE

REGISTERED PROFESSIONAL ENGINEER
Randell D. Hiatt
No. C50200
Exp. 6-30-09
CIVIL
STATE OF CALIFORNIA

The State of California or its officers or agents shall not be responsible for the accuracy or completeness of electronic copies of this plan sheet.

To accompany plans dated 4-12-10

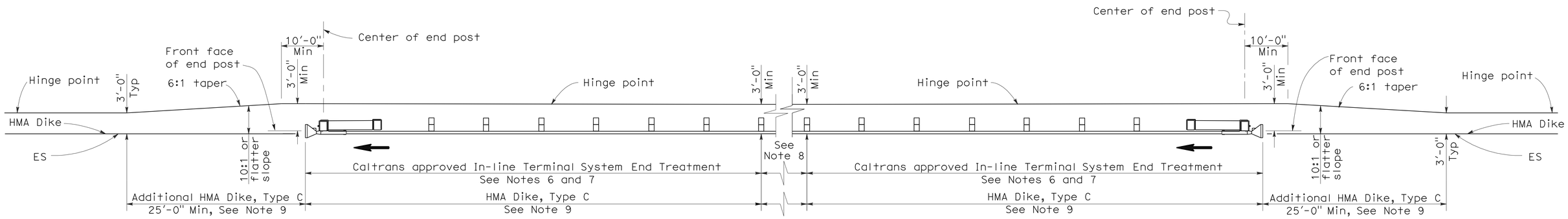

TYPE 11D LAYOUT

(EMBANKMENT GUARD RAILING INSTALLATION WITH IN-LINE END TREATMENT AT EACH END OF RAILING)
See Note 5

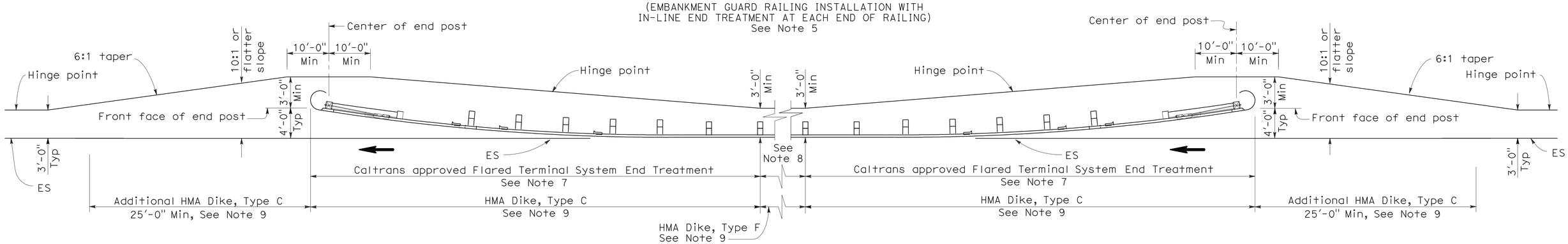

TYPE 11E LAYOUT

(EMBANKMENT GUARD RAILING INSTALLATION WITH FLARED END TREATMENT AT EACH END OF RAILING)
See Note 5

NOTES:

1. Line post, blocks and hardware to be used are shown on Standard Plans A77A1, A77A2, A77B1, A77C1 and A77C2.
2. Guard rail post spacing to be 6'-3" center to center, except as otherwise noted.
3. Except as noted, line posts are 6" x 8" x 6'-0" wood with 6" x 8" x 1'-2" wood blocks. W6 x 9 steel posts, 6'-0" in length, with 6" x 8" x 1'-2" notched wood blocks or plastic blocks may be used for 6" x 8" x 6'-0" wood post with 6" x 8" x 1'-2" wood blocks where applicable and when specified.
4. Direction of adjacent traffic indicated by ⟶.
5. Layout Types 11D through 11L, shown on the A77E Series of Revised Standard Plans, are typically used where guard railing is recommended to shield embankment slopes and a crashworthy end treatment is required for both directions of traffic.
6. In-line Terminal System End Treatments are used where site conditions will not accommodate a flared end treatment.
7. The type of terminal system end treatment to be used will be shown on the Project Plans.
8. Dependent on site conditions (embankment height and side slope), construction of additional guard railing (length equal to multiples of 12'-6" with 6'-3" post spacing) may be advisable.
9. Where placement of dike is required with guard railing installations, see Revised Standard Plan RSP A77C4 for dike positioning details.

STATE OF CALIFORNIA
DEPARTMENT OF TRANSPORTATION

METAL BEAM GUARD RAILING TYPICAL LAYOUTS FOR EMBANKMENTS

NO SCALE

RSP A77E2 DATED JUNE 6, 2008 SUPERSEDES STANDARD PLAN A77E2
DATED MAY 1, 2006 - PAGE 49 OF THE STANDARD PLANS BOOK DATED MAY 2006.

REVISED STANDARD PLAN RSP A77E2

2006 REVISED STANDARD PLAN RSP A77E2

12-10-07

DIST	COUNTY	ROUTE	POST MILES TOTAL PROJECT	SHEET NO.	TOTAL SHEETS
01	Men,Lak	175	Var	19	32

Randell D. Hiatt
REGISTERED CIVIL ENGINEER

June 6, 2008
PLANS APPROVAL DATE

REGISTERED PROFESSIONAL ENGINEER
Randell D. Hiatt
No. C50200
Exp. 6-30-09
CIVIL
STATE OF CALIFORNIA

The State of California or its officers or agents shall not be responsible for the accuracy or completeness of electronic copies of this plan sheet.

To accompany plans dated 4-12-10

2006 REVISED STANDARD PLAN RSP A77E3

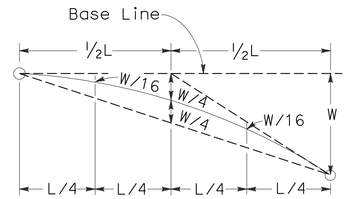

TYPICAL PARABOLIC LAYOUT

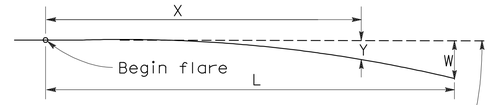

Base Line (Edge of paved shoulder or offset line of edge of traveled way)

$$Y = \frac{WX^2}{L^2}$$

Y = Offset from base line
W = Maximum offset
X = Distance along base line
L = Length of flare

PARABOLIC FLARE OFFSETS

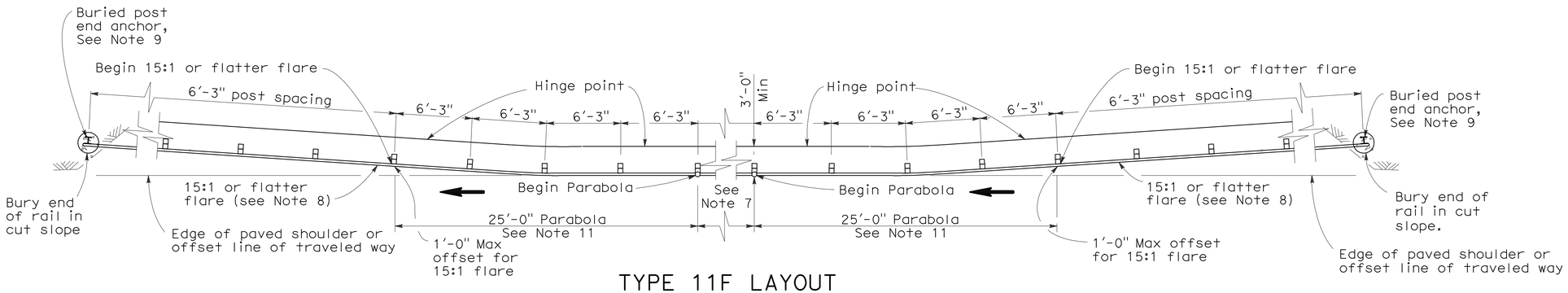

TYPE 11F LAYOUT

(EMBANKMENT GUARD RAILING INSTALLATION WITH A BURIED END ANCHOR TREATMENT AT EACH END OF RAILING)
See Notes 5 and 10

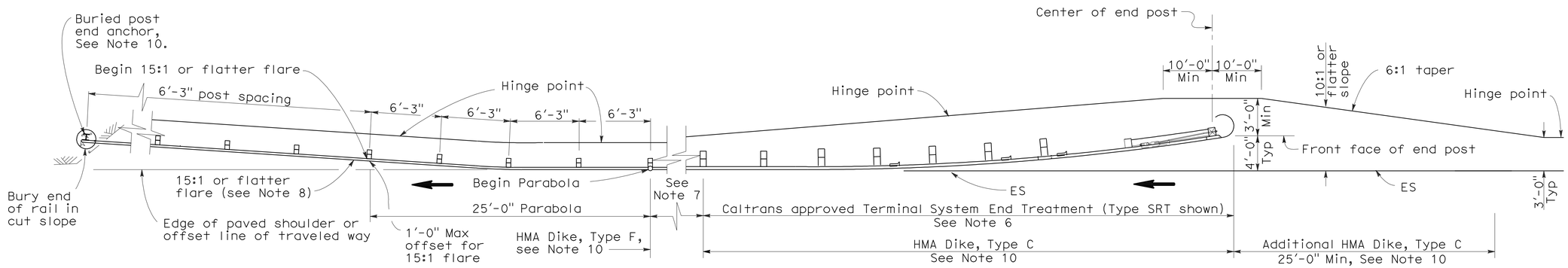

TYPE 11G LAYOUT

(EMBANKMENT GUARD RAILING INSTALLATION WITH FLARED END TREATMENT AND A BURIED END ANCHOR TREATMENT AT THE ENDS OF RAILING)
See Notes 5 and 10

NOTES:

1. Line post, blocks and hardware to be used are shown on Standard Plans A77A1, A77A2, A77B1, A77C1 and A77C2.
2. Guard rail post spacing to be 6'-3" center to center, except as otherwise noted.
3. Except as noted, line posts are 6" x 8" x 6'-0" wood with 6" x 8" x 1'-2" wood blocks. W6 x 9 steel posts, 6'-0" in length, with 6" x 8" x 1'-2" notched wood blocks or plastic blocks may be used for 6" x 8" x 6'-0" wood post with 6" x 8" x 1'-2" wood blocks where applicable and when specified.
4. Direction of adjacent traffic indicated by ⟶.
5. Layout Types 11D through 11L, shown on the A77E Series of Revised Standard Plans, are typically used where guard railing is recommended to shield embankment slopes and a crashworthy end treatment is required for both directions of traffic.
6. The type of terminal system end treatment to be used will be shown on the Project Plans.
7. Dependent on site conditions (embankment height and side slope), construction of additional guard railing (length equal to multiples of 12'-6" with 6'-3" post spacing) may be advisable.
8. The 15:1 or flatter flare used with buried end anchors is based on the edge of the paved shoulder or offset line of edge of the traveled way. The length of guard railing within the 15:1 or flatter flare is based on site conditions and should be a length equal to multiples of 12'-6".
9. For details of the buried post end anchor used with Type 11F and 11G Layouts, see Standard Plan A77I2.
10. Where placement of dike is required with guard railing installations, see Revised Standard Plan RSP A77C4 for dike positioning details.
11. For typical flare offsets for 25'-0" length parabola with maximum offset of 1'-0", see Revised Standard Plan RSP A77E1.

STATE OF CALIFORNIA
DEPARTMENT OF TRANSPORTATION

METAL BEAM GUARD RAILING TYPICAL LAYOUTS FOR EMBANKMENTS

NO SCALE

RSP A77E3 DATED JUNE 6, 2008 SUPERSEDES STANDARD PLAN A77E3 DATED MAY 1, 2006 - PAGE 50 OF THE STANDARD PLANS BOOK DATED MAY 2006.

REVISED STANDARD PLAN RSP A77E3

12-10-07

DIST	COUNTY	ROUTE	POST MILES TOTAL PROJECT	SHEET NO.	TOTAL SHEETS
01	Men,Lak	175	Var	20	32

Randell D. Hiatt
REGISTERED CIVIL ENGINEER

June 6, 2008
PLANS APPROVAL DATE

REGISTERED PROFESSIONAL ENGINEER
Randell D. Hiatt
No. C50200
Exp. 6-30-09
CIVIL
STATE OF CALIFORNIA

The State of California or its officers or agents shall not be responsible for the accuracy or completeness of electronic copies of this plan sheet.

To accompany plans dated 4-12-10

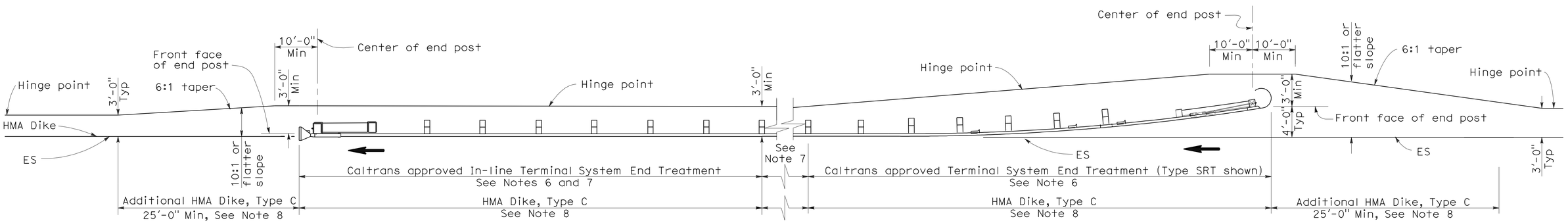

TYPE 11H LAYOUT

(EMBANKMENT GUARD RAILING INSTALLATION WITH FLARED END TREATMENT
AND AN IN-LINE TREATMENT AT THE ENDS OF RAILING)
See Notes 5 and 8

NOTES:

1. Line post, blocks and hardware to be used are shown on Standard Plans A77A1, A77A2, A77B1, A77C1 and A77C2.
2. Guard rail post spacing to be 6'-3" center to center, except as otherwise noted.
3. Except as noted, line posts are 6" x 8" x 6'-0" wood with 6" x 8" x 1'-2" wood blocks. W6 x 9 steel posts, 6'-0" in length, with 6" x 8" x 1'-2" notched wood blocks or plastic blocks may be used for 6" x 8" x 6'-0" wood post with 6" x 8" x 1'-2" wood blocks where applicable and when specified.
4. Direction of adjacent traffic indicated by ⟶.
5. Layout Types 11D through 11L, shown on the A77E Series of Revised Standard Plans, are typically used where guard railing is recommended to shield embankment slopes and a crashworthy end treatment is required for both directions of traffic.
6. The type of terminal system end treatment to be used will be shown on the Project Plans.
7. Dependent on site conditions (embankment height and side slope), construction of additional guard railing (length equal to multiples of 12'-6" with 6'-3" post spacing) may be advisable.
8. Where placement of dike is required with guard railing installations, see Revised Standard Plan RSP A77C4 for dike positioning details.

STATE OF CALIFORNIA
DEPARTMENT OF TRANSPORTATION

METAL BEAM GUARD RAILING TYPICAL LAYOUTS FOR EMBANKMENTS

NO SCALE

RSP A77E4 DATED JUNE 6, 2008 SUPERSEDES STANDARD PLAN A77E4
DATED MAY 1, 2006 - PAGE 51 OF THE STANDARD PLANS BOOK DATED MAY 2006.

REVISED STANDARD PLAN RSP A77E4

2006 REVISED STANDARD PLAN RSP A77E4

DIST	COUNTY	ROUTE	POST MILES TOTAL PROJECT	SHEET NO.	TOTAL SHEETS
01	Men,Lak	175	Var	21	32

Randell D. Hiatt
REGISTERED CIVIL ENGINEER

June 6, 2008
PLANS APPROVAL DATE

REGISTERED PROFESSIONAL ENGINEER
Randell D. Hiatt
No. C50200
Exp. 6-30-09
CIVIL
STATE OF CALIFORNIA

The State of California or its officers or agents shall not be responsible for the accuracy or completeness of electronic copies of this plan sheet.

To accompany plans dated 4-12-10

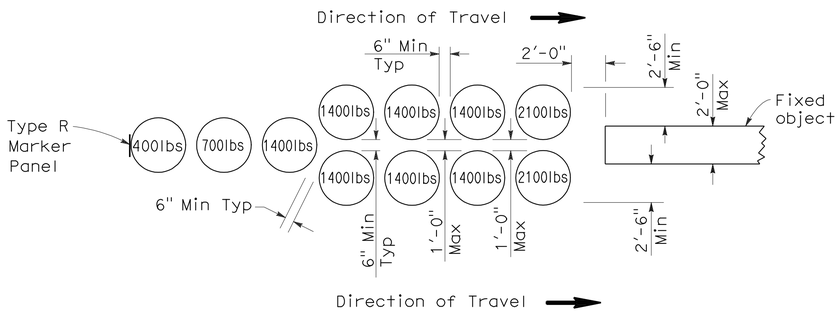

ARRAY 'U11'

Approach speed less than 45 mph

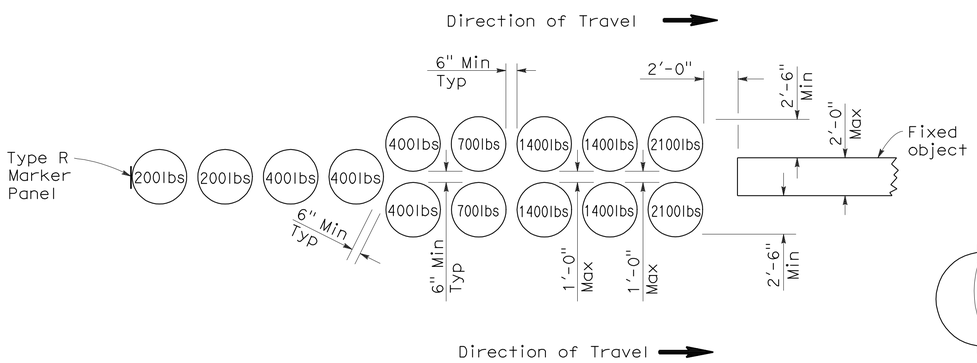

ARRAY 'U14'

Approach speed 45 mph or more

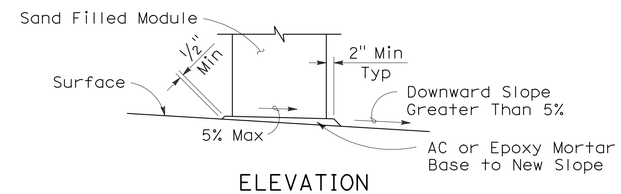

ELEVATION

SLOPED SEAT DETAIL

(See Note 4)

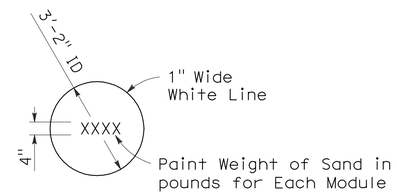

PAINTING DETAIL

(See Note 5)

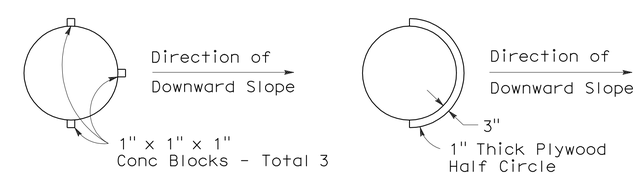

ALTERNATIVE 1

ALTERNATIVE 2

PLAN

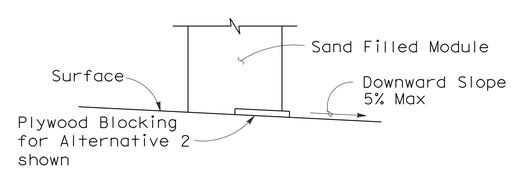

ELEVATION

BRIDGE DECK MODULE BLOCKING DETAILS

(See Note 6)

NOTES:

1. (XXX) Indicates module location and mass of sand in pounds for each module. Module spacing is based on the greater diameter of the modules.
2. All sand weights are nominal.
3. Each module is to contain amount of sand indicated, supported according to the manufacturer's instructions.
4. Modules shall be placed on asphalt concrete, epoxy mortar or concrete surface. Modules to be placed on surfacing with greater than 5% downward slope shall be seated as shown.
5. Mass of sand and outline of each module shall be painted on the surface at each module location.
6. Module blocking, epoxied to the deck surface, is required for all modules placed on bridge decks. Two acceptable alternatives are shown. Other alternatives recommended by the manufacturer and approved by the Engineer will be accepted.
7. Place the top of the Type R marker panel 1" below the module lid.
8. Approach speeds indicated conform to NCHRP Report criteria.

STATE OF CALIFORNIA
DEPARTMENT OF TRANSPORTATION

CRASH CUSHION, SAND FILLED (UNIDIRECTIONAL)

NO SCALE

RSP A81A DATED JUNE 6, 2008 SUPERSEDES STANDARD PLAN A81A DATED MAY 1, 2006 - PAGE 99 OF THE STANDARD PLANS BOOK DATED MAY 2006.

REVISED STANDARD PLAN RSP A81A

2006 REVISED STANDARD PLAN RSP A81A

5-15-08

DIST	COUNTY	ROUTE	POST MILES TOTAL PROJECT	SHEET NO.	TOTAL SHEETS
01	Men,Lak	175	Var	22	32

Randell D. Hiatt
REGISTERED CIVIL ENGINEER

June 6, 2008
PLANS APPROVAL DATE

REGISTERED PROFESSIONAL ENGINEER
Randell D. Hiatt
No. C50200
Exp. 6-30-09
CIVIL
STATE OF CALIFORNIA

The State of California or its officers or agents shall not be responsible for the accuracy or completeness of electronic copies of this plan sheet.

To accompany plans dated 4-12-10

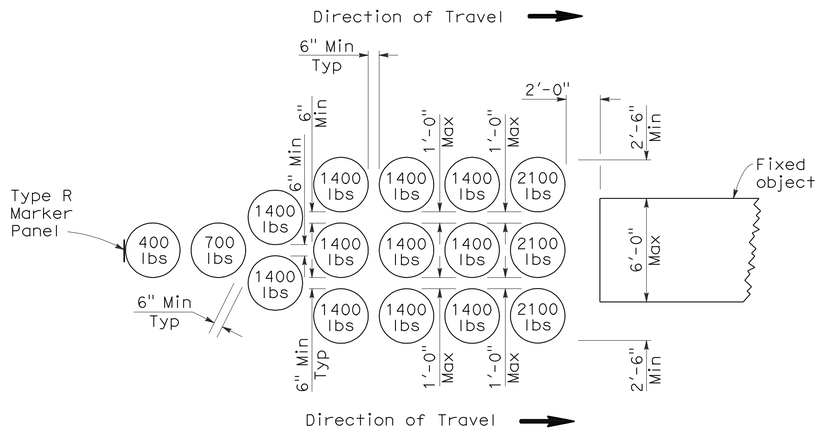

ARRAY 'U16'

Approach speed less than 45 mph

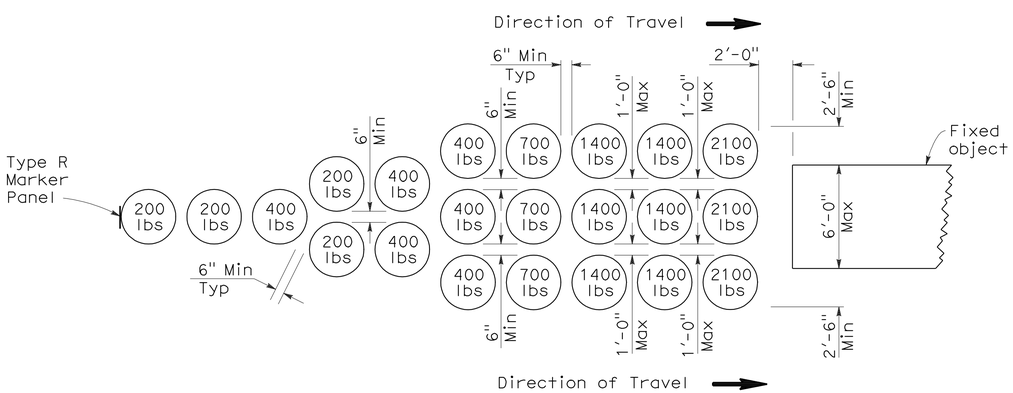

ARRAY 'U21'

Approach speed 45 mph or more

NOTES:

1. (XXX) Indicates module location and weight of sand in pounds for each module. Module spacing is based on the greater diameter of the modules.
2. All sand weights are nominal.
3. Each module is to contain amount of sand indicated, supported according to the manufacturer's instructions.
4. Modules shall be placed on asphalt concrete, epoxy mortar or concrete surface. Modules to be placed on surfacing with greater than 5% downward slope shall be seated as shown.
5. Mass of sand and outline of each module shall be painted on the surface at each module location.
6. Module blocking, epoxied to the deck surface, is required for all modules placed on bridge decks. Two acceptable alternatives are shown. Other alternatives recommended by the manufacturer and approved by the Engineer will be accepted.
7. Place the top of the Type R marker panel 1" below the module lid.
8. Approach speeds indicated conform to NCHRP Report criteria.

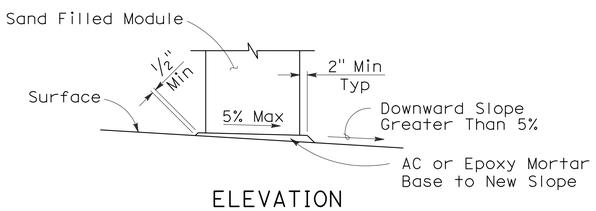

ELEVATION

SLOPED SEAT DETAIL

(See Note 4)

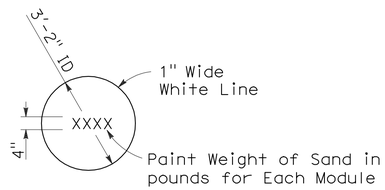

PAINTING DETAIL

(See Note 5)

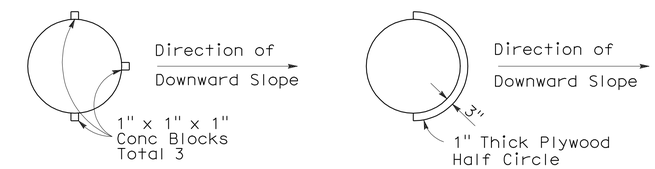

ALTERNATIVE 1 ALTERNATIVE 2

PLAN

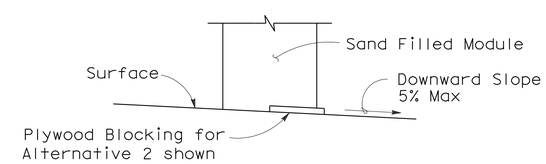

ELEVATION

BRIDGE DECK MODULE BLOCKING DETAILS

(See Note 6)

STATE OF CALIFORNIA
DEPARTMENT OF TRANSPORTATION

CRASH CUSHION, SAND FILLED (UNIDIRECTIONAL)

NO SCALE

RSP A81B DATED JUNE 6, 2008 SUPERSEDES STANDARD PLAN A81B DATED MAY 1, 2006 - PAGE 100 OF THE STANDARD PLANS BOOK DATED MAY 2006.

REVISED STANDARD PLAN RSP A81B

2006 REVISED STANDARD PLAN RSP A81B

5-15-08

DIST	COUNTY	ROUTE	POST MILES TOTAL PROJECT	SHEET NO.	TOTAL SHEETS
01	Men,Lak	175	Var	23	32

REGISTERED CIVIL ENGINEER

June 15, 2007
PLANS APPROVAL DATE

REGISTERED PROFESSIONAL ENGINEER Glenn DeCou No. C34547 Exp. 9-30-07 CIVIL STATE OF CALIFORNIA

The State of California or its officers or agents shall not be responsible for the accuracy or completeness of electronic copies of this plan sheet.

To accompany plans dated 4-12-10

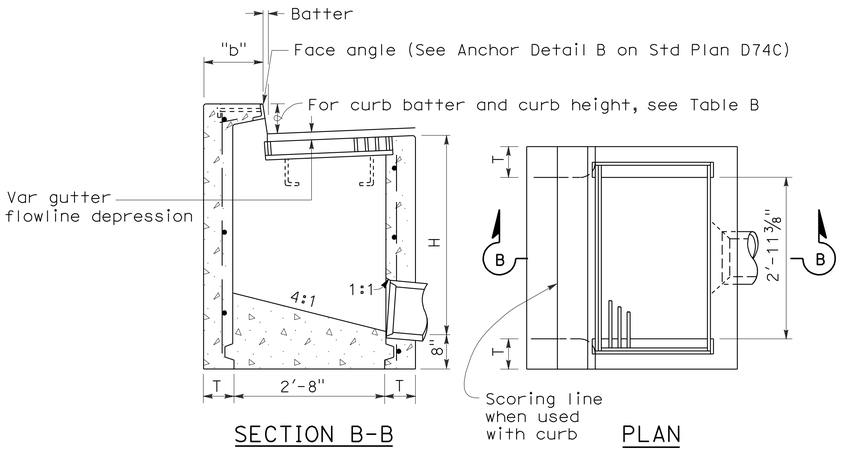

SECTION B-B PLAN

TYPE GO

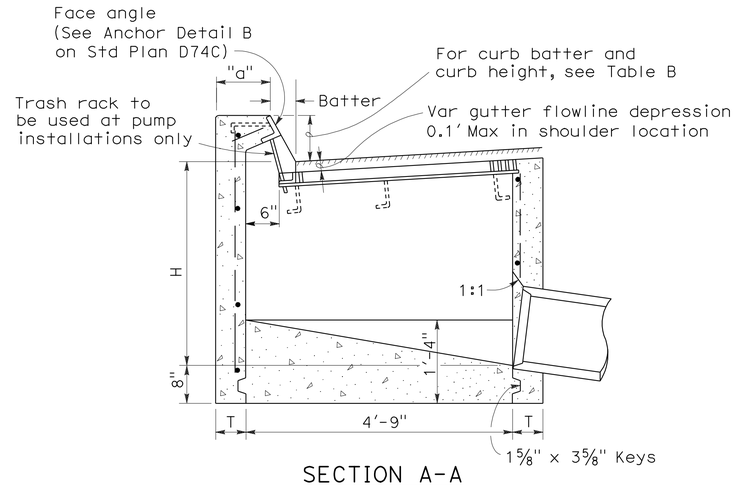

SECTION A-A

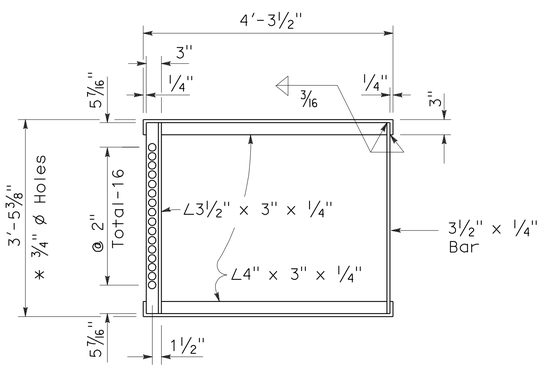

* 3/4" ø Holes required only with trash rack

GRATE FRAME FOR TYPE GDO INLET

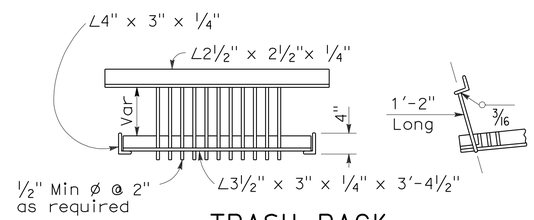

TRASH RACK

(For use with pump installation)

TABLE A

CONCRETE QUANTITIES				
	H=3'-0" TO 8'-0" (T=6")		H=8'-1" TO 20'-0" (T=8")	
TYPE	H=3'-0" (CY)	ADDITIONAL PCC PER FOOT (CY)	H=8'-1" (CY)	ADDITIONAL PCC PER FOOT (CY)
GO	1.24	0.245	3.39	0.346
GDO	1.62	0.322	4.36	0.446

Table based on 8" floor slab, no deduction for pipe openings, and curb type giving highest quantity of concrete. No deductions or adjustments are to be made to these quantities because of pipe openings, different floor alternatives or different curb type.

TABLE B

CURB TYPE	NORMAL CURB HEIGHT	CURB BATTER	"a" DIMENSION	"b" DIMENSION
A1-6	6"	1 1/2"	T+7 1/2"	T+6 1/2"
A1-8	8"	2"	T+7"	T+6"
B1-6	6"	4"	T+5"	T+4"
Type A Dike	6"	3"	T+6"	T+5"

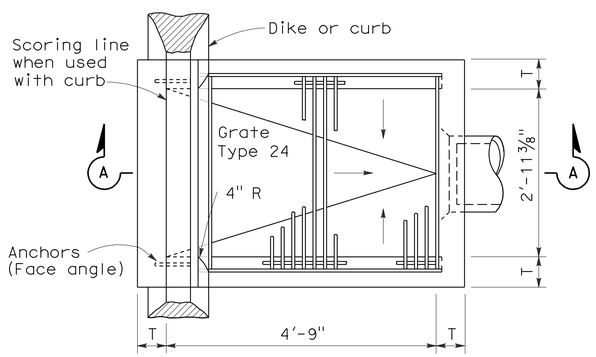

PLAN

TYPE GDO

NOTES:

1. "H" is the difference in elevation between the outlet pipe flow line and the normal gutter grade line undepressed.
2. For "T" wall thickness, see Table A below.
3. Wall reinforcing not required when "H" is 8'-0" or less and the unsupported width or length is 7'-0" or less. Walls exceeding these limits shall be reinforced with #4 @ 18"± centers placed 1 1/2" clear to inside of box unless otherwise shown.
4. Inlet bottom reinforcing not required. See Standard Plan D74C for alternative reinforced bottom.
5. Steps - None required where "H" is less than 2'-6" Where "H" is 2'-6" or more, install steps with lowest rung 1'-0" above the floor and highest rung not more than 6" below top of inlet. The distance between steps shall not exceed 1'-0" and shall be uniform throughout the length of the wall. Place steps in the wall without an opening. Step inserts may be substituted for the bar steps. Step Inserts shall comply with State Industrial Safety requirements. See Standard Plan D74C for step details.
6. When shown on the project plans, place a 3/4" plain round protection bar horizontally across the length of the opening and bend back 4" into the inlet wall on each side.
7. Pipe(s) can be placed in any wall.
8. Curb section shall match adjacent curb.
9. Basin floors shall have wood trowel finish and shall slope toward the outlet pipe as shown.
10. Galvanizing - See Standard Specifications or Special Provisions.
11. See Standard Plan D77A and D77B for grate and frame details and weights of miscellaneous iron and Steel.
12. See Standard Plan D78A for gutter depression details.
13. Full penetration butt welds may be substituted for the fillet welds on all anchors.
14. Standard square, hexagon, round or equivalent headed anchors may be substituted for the right angle hooks on the anchors shown on this plan.
15. Cast-in-place or precast alternative is optional with contractor. See Standard Specifications.
16. Cast-in-place inlets to be formed around all pipes/stubs intersecing the inlet and concrete poured in one continuous operation. Precast inlets shall have mortared pipe connections conforming to details for Type GCP inlets on Standard Plan D75B. See Standard Specifications for mortar composition.

STATE OF CALIFORNIA
DEPARTMENT OF TRANSPORTATION

DRAINAGE INLETS

NO SCALE

RSP D74B DATED JUNE 15, 2007 SUPERSEDES STANDARD PLAN D74B DATED MAY 1, 2006 - PAGE 150 OF THE STANDARD PLANS BOOK DATED MAY 2006.

REVISED STANDARD PLAN RSP D74B

2006 REVISED STANDARD PLAN RSP D74B

4-16-07

DIST	COUNTY	ROUTE	POST MILES TOTAL PROJECT	SHEET NO.	TOTAL SHEETS
01	Men,Lak	175	Var	24	32

Raymond Don Tsztoo
REGISTERED CIVIL ENGINEER

January 18, 2008
PLANS APPROVAL DATE

REGISTERED PROFESSIONAL ENGINEER
Raymond Don Tsztoo
No. C37332
Exp. 6-30-08
CIVIL
STATE OF CALIFORNIA

The State of California or its officers or agents shall not be responsible for the accuracy or completeness of electronic copies of this plan sheet.

To accompany plans dated 4-12-10

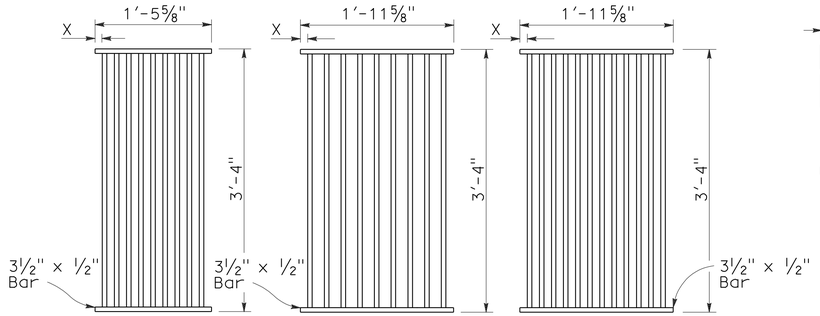

TYPE 18-9

1⅜" Clear spacing. Use within the roadbed on highways where bicycles and pedestrians are excluded.

TYPE 24-9

2" Clear spacing. Use in locations off the roadbed on all types of highways.

TYPE 24-12

1⅜" Clear spacing. Use within the roadbed on highways where bicycles and pedestrians are excluded.

RECTANGULAR GRATE DETAILS

(See table below)

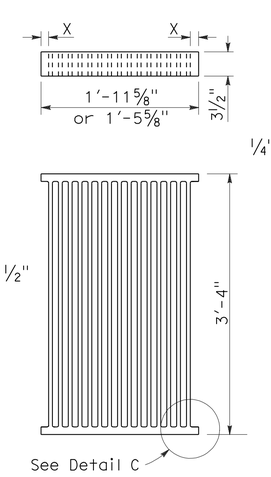

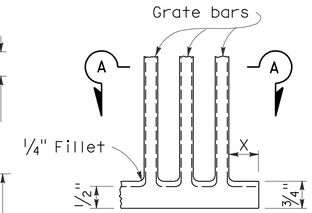

DETAIL C

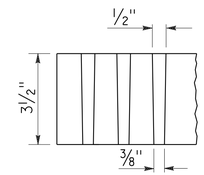

SECTION A-A

ALTERNATIVE CAST NODULAR IRON GRATE OR CAST STEEL GRATE

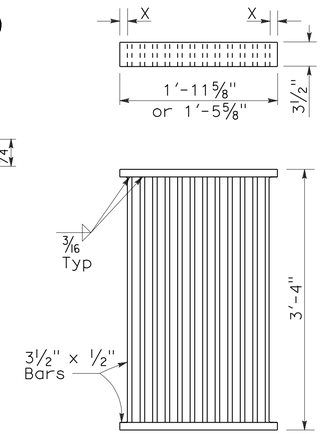

ALTERNATIVE WELDED GRATE

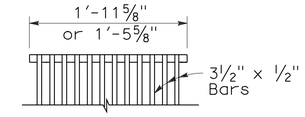

CAST END BLOCK

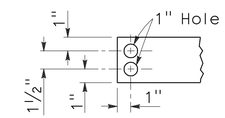

END OF BAR

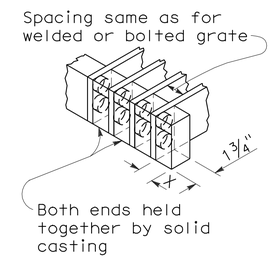

ALTERNATIVE CAST NODULAR IRON OR CAST STEEL END BLOCK GRATE

NOTES:

1. Grate type numbers refer to approximate width of grate in inches and number of bars, respectively.
2. Contractor has the option of using cast nodular iron, cast steel, welded, bolted, or cast end block grate.
3. See Special Provisions for requirements pertaining to galvanizing or asphalt dipping of grates and frames.
4. Rounded top of bars optional on all grates.
5. Pipe inlets with a grate shall be placed so that bars parallel direction of principle surface flow.
6. Full penetration butt welds may be substituted for the fillet welds on all anchors.
7. Standard square, hexagon, round or equivalent headed anchors may be substituted for the right angle hooks on the anchors shown on this plan.
8. Grate and frame weights are based on welded grates (weights of face angles, steps, protection bars, etc. are not included).

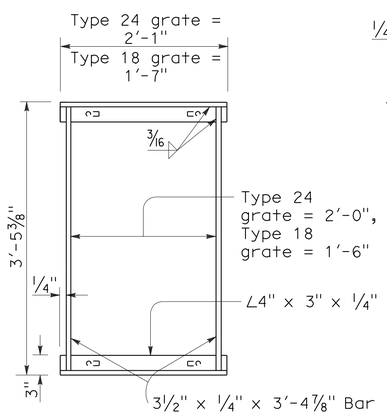

TYPICAL FRAME

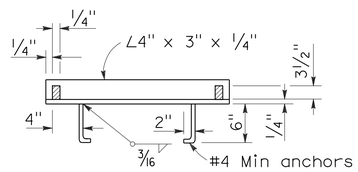

CROSS SECTION

(Thru frame)

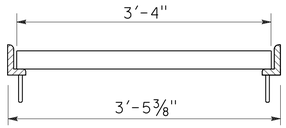

LONGITUDINAL SECTION

(Thru frame and grate)

RECTANGULAR FRAME DETAILS

(For all rectangular grates)

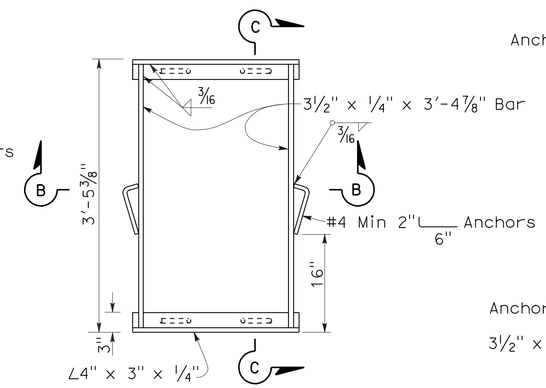

TYPICAL FRAME

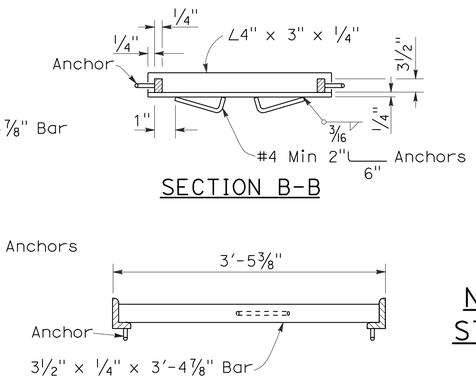

SECTION B-B

SECTION C-C

ALTERNATIVE ANCHOR FOR RECTANGULAR FRAME

(For details not shown, See Rectangular Frame Details)

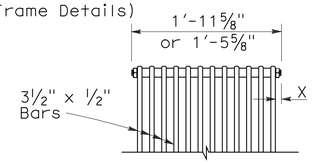

BOLTED END BLOCK

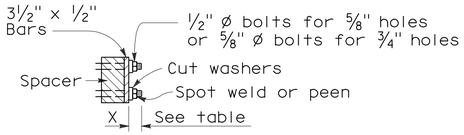

BOLTING DETAIL

ALTERNATIVE BOLTED GRATE

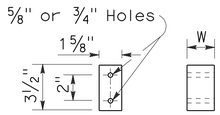

BAR SPACER

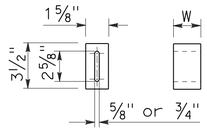

ALTERNATIVE SPACER

W = 1⅜" or 2"

GRATE BAR SPACING TABLE

TYPE	No. OF BARS	CLEAR BAR SPACING	X
18-9	9	1⅜"	1 1/16"
24-9	9	2"	1 9/16"
24-12	12	1⅜"	1¼"

INLET TYPE	COVER TYPE	WEIGHT LB
OS	PLATE	174
OL-7	PLATE	170
OL-10	PLATE	170
OL-14	PLATE	170
OL-21	PLATE	170
OCP	PLATE	112
OCPI	PLATE	112
OCPI	REDWOOD	42
OMP	PLATE	177
OMPI	PLATE	177

INLET TYPE	GRATE TYPE	No. OF GRATES	WEIGHT LB
GDO	24-12	2	634
GOL-7	24-12	1	326
GOL-10	24-12	1	326
GO,G1,G2,G3,G4 (TYPE 24)	24-9	1	263
	24-12	1	326
G4 (TYPE 18),G5,G6	18-9	1	249
GT1	18-9	2	498
GT2	18-9	2	498
GT3	24-12	2	652
GT4	24-12	2	652
TRASH RACK			22

BASIS FOR MISC IRON & STEEL FINAL PAY WEIGHTS FOR DRAINAGE INLETS

(See General Notes, No 8)

STATE OF CALIFORNIA
DEPARTMENT OF TRANSPORTATION

GRATE DETAILS

NO SCALE

RSP D77A DATED JANUARY 18, 2008 SUPERSEDES STANDARD PLAN D77A DATED MAY 1, 2006 - PAGE 155 OF THE STANDARD PLANS BOOK DATED MAY 2006.

REVISED STANDARD PLAN RSP D77A

2006 REVISED STANDARD PLAN RSP D77A

12-14-07

DIST	COUNTY	ROUTE	POST MILES TOTAL PROJECT	SHEET NO.	TOTAL SHEETS
01	Men,Lak	175	Var	25	32

Raymond Don Tsztoo
REGISTERED CIVIL ENGINEER

June 6, 2008
PLANS APPROVAL DATE

REGISTERED PROFESSIONAL ENGINEER
Raymond Don Tsztoo
No. C37332
Exp. 6-30-08
CIVIL
STATE OF CALIFORNIA

The State of California or its officers or agents shall not be responsible for the accuracy or completeness of electronic copies of this plan sheet.

To accompany plans dated 4-12-10

ANNULAR AND HELICAL PROFILE

COUPLING TYPE	PIPE CORRUGATION	PIPE SIZE	W OR A	PIPE WALL THICKNESS		BAND THICKNESS		BAR AND STRAP (CSP ONLY)			ANGLE						
											DIMENSIONS		BOLTS (No.- Dia)		RIVETS ANGLE TO BAND		SPOT WELDS ANGLE TO BAND
				CSP	CAP	CSP	CAP	STRAP THICKNESS	BOLTS Dia	BAR Dia	CSP	CAP	CSP	CAP	CSP	CAP	CSP
TWO PIECE INTEGRAL FLANGE	1½′ × ¼″	6″	7″	0.064″-0.168″		0.052″							3-⅜″				
	1½′ × ¼″	8″-10″	7″	0.064″-0.168″	0.060″-0.164″	0.064″	0.060″						3-⅜″	3-⅜″			
ANNULAR	2⅔″ × ½″	THROUGH 24″	12″	0.064″-0.168″	0.060″-0.164″	0.064″	0.060″				2″ × 2″ × 3⁄16″	2″ × 2″ × 3⁄16″	3-½″	3-½″	3-⅜″	3-⅜″	3-½″
HUGGER	2⅔″ × ½″ REROLLED END	THROUGH 24″	10½″	0.064″-0.168″		0.064″		0.079″	½″	⅞″							

SPIRAL RIB PROFILE

COUPLING TYPE	PIPE CORRUGATION	PIPE SIZE	W	PIPE WALL THICKNESS		BAND THICKNESS		BAR AND STRAP (SSRP ONLY)			ANGLE						
											DIMENSIONS		BOLTS (No.- Dia)		RIVETS ANGLE TO BAND		SPOT WELDS ANGLE TO BAND
				SSRP	ASRP	SSRP	ASRP	STRAP THICKNESS	BOLTS Dia	BAR Dia	SSRP	ASRP	SSRP	ASRP	SSRP	ASRP	SSRP
ANNULAR	2⅔″ × ½″ * REROLLED END	24″	12″	0.064″-0.168″	0.060″-0.164″	0.064″	0.060″				2″ × 2″ × 3⁄16″	2″ × 2″ × 3⁄16″	3-½″	3-½″	3-⅜″	3-⅜″	3-½″
HUGGER	2⅔″ × ½″ * REROLLED END	24″	10½″	0.064″-0.168″		0.064″		0.079″	½″	⅞″							

* See Note 12.

12. All profiles of Spiral Rib Pipe (¾″ × ¾″ ribs at 7½″ pitch and ¾″ × 1″ ribs at 11½″ pitch in both steel and aluminum and ¾″ × 1″ ribs at 8½″ pitch in steel only) shall be manufactured with rerolled ends. Corrugation profile of the rerolled ends shall be 2⅔″ × ½″ annual corrugations with a minimum of two full corrugations at each end.

NOTES:

1. All ferrous metal coupling band connection hardware shall be galvanized or electro-plated in accordance with the Standard Specifications.
2. For helically corrugated coupling bands, the connection angles may be oriented parallel to the pipe axis, provided connecting holes are slotted lengthwise sufficiently to allow adjustment for the helix angle.
3. Tension strap may be connected to band with either spot welds or fillet welds that develop minimum required strength of strap.
4. Use 1¼″ gage line dimension on attached angle leg for rivets and spot welds.
5. Band thickness shall not be less than:
   a. 3 standard thicknesses lighter than the thickness of the pipe for Corrugated Steel Pipe.
   b. 2 standard thicknesses lighter than the thickness of the pipe and in no case lighter than 0.060″ for Corrugated Aluminum Pipe.
6. Dimensions, thicknesses and strengths shown are minimum.
7. For pipe arches use same width band as for round pipe of equal periphery.
8. Fillet welds of equivalent strenght may be substituted for spot welds or rivets.
9. Spot welds shall develop minimum required strength of strap.
10. Pipe with rerolled ends having at least two 2⅔″ × ½″ annular corrugations at each end with or without an upturned flange may be connected with any of the annular coupling bands shown for pipe of the same diameter and wall thickness and having 2⅔″ × ½″ corrugations.
11. For downdrain applications, two piece integral flange couplers shall have factory applied sleeve type rubber gaskets with a minimum length of 7″ measured along the length of the pipe.

STATE OF CALIFORNIA
DEPARTMENT OF TRANSPORTATION

CORRUGATED METAL PIPE COUPLING DETAILS No. 7 DOWNDRAIN

NO SCALE

RSP D97G DATED JUNE 6, 2008 SUPERSEDES STANDARD PLAN D97G
DATED MAY 1, 2006 - PAGE 189 OF THE STANDARD PLANS BOOK DATED MAY 2006.

REVISED STANDARD PLAN RSP D97G

2006 REVISED STANDARD PLAN RSP D97G

4-4-08

DIST	COUNTY	ROUTE	POST MILES TOTAL PROJECT	SHEET NO.	TOTAL SHEETS
01	Men,Lak	175	Var	26	32

Raymond Don Tsztoo
REGISTERED CIVIL ENGINEER

January 18, 2008
PLANS APPROVAL DATE

REGISTERED PROFESSIONAL ENGINEER
Raymond Don Tsztoo
No. C37332
Exp. 6-30-08
CIVIL
STATE OF CALIFORNIA

The State of California or its officers or agents shall not be responsible for the accuracy or completeness of electronic copies of this plan sheet.

To accompany plans dated 4-12-10

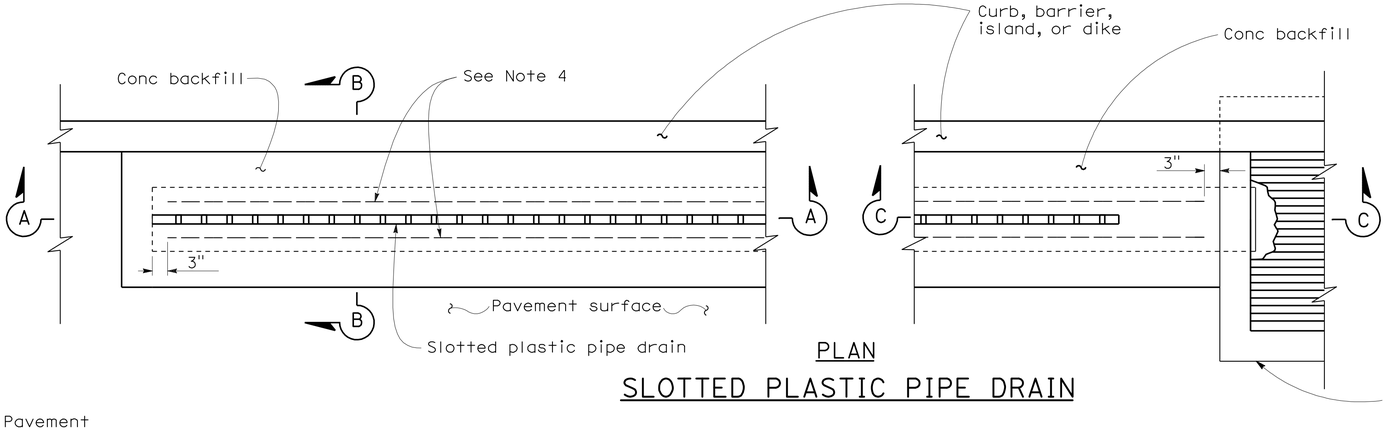

PLAN

SLOTTED PLASTIC PIPE DRAIN

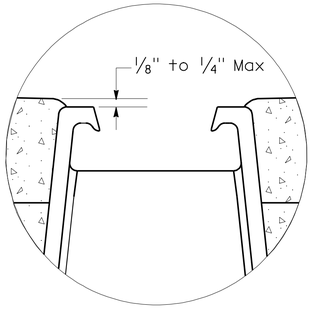

DETAIL A

NOTES:

1. Plastic weld shall be factory fabricated.
2. When Heel Resistant Grate is to be used, see New Standard Plan NSP D98E for details.
3. Exterior wall stiffener ridges and details not shown on section views. See transition fitting detail for typical exterior ridges and throat stiffeners.
4. Lateral support, #4 bar, to be placed on both sides of slotted plastic pipe.

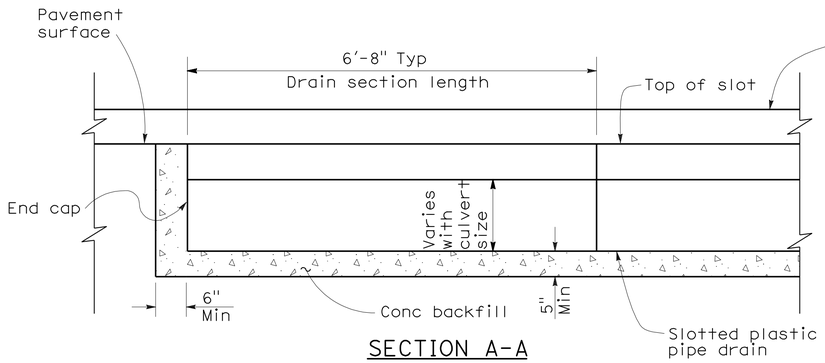

SECTION A-A

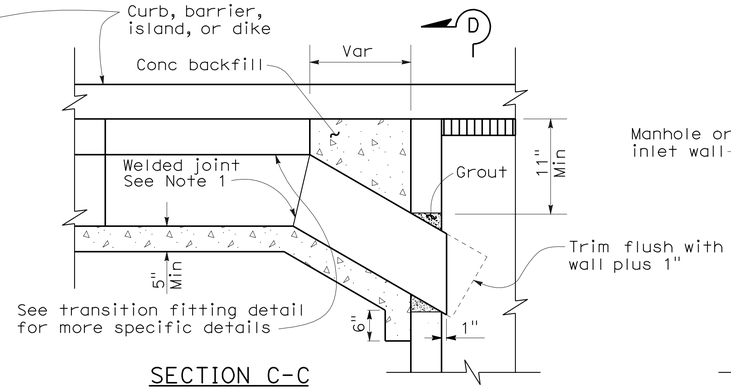

SECTION C-C

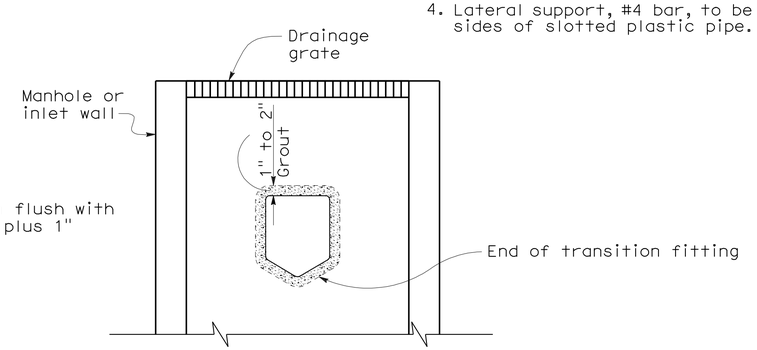

SECTION D-D

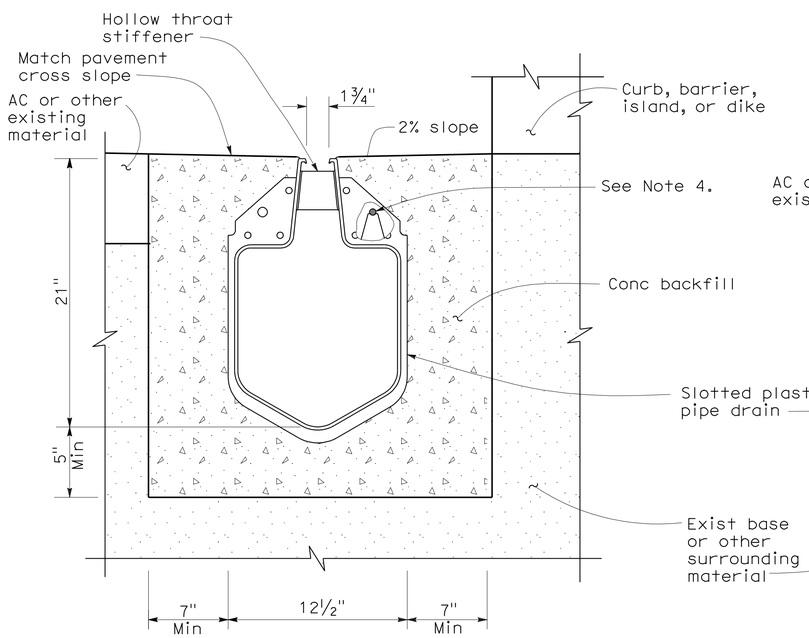

SECTION B-B
18" Slotted Plastic Pipe Drain

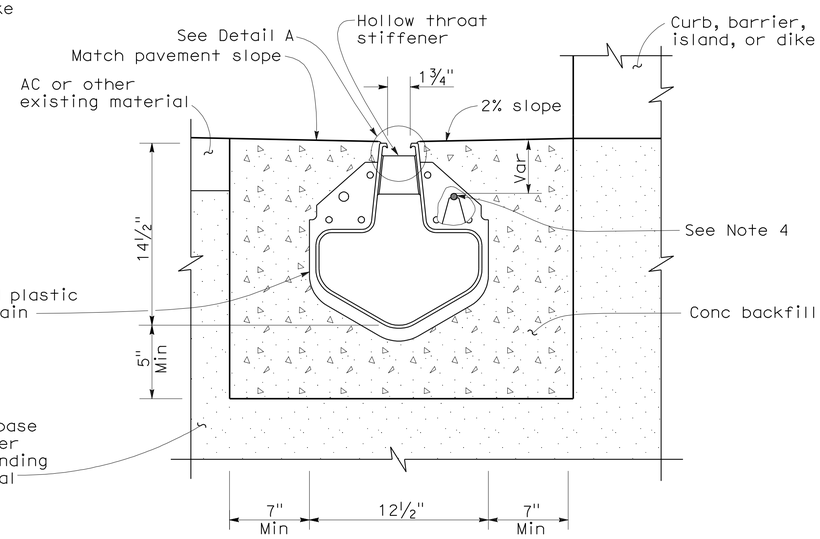

SECTION B-B
12" Slotted Plastic Pipe Drain

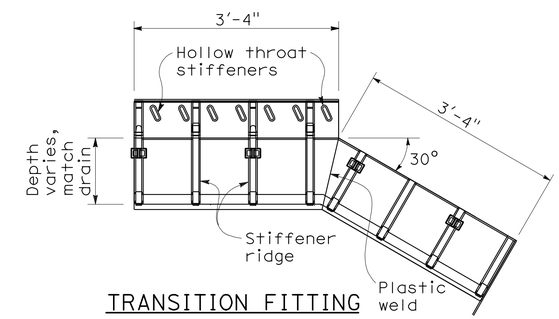

TRANSITION FITTING
with stiffeners and details shown

STATE OF CALIFORNIA
DEPARTMENT OF TRANSPORTATION

SLOTTED PLASTIC PIPE DRAIN DETAILS

NO SCALE

NSP D98D DATED JANUARY 18, 2008 SUPPLEMENTS THE STANDARD PLANS BOOK DATED MAY 2006.

NEW STANDARD PLAN NSP D98D

2006 NEW STANDARD PLAN NSP D98D

11-5-07

DIST	COUNTY	ROUTE	POST MILES TOTAL PROJECT	SHEET NO.	TOTAL SHEETS
01	Men,Lak	175	Var	27	32

LICENSED LANDSCAPE ARCHITECT

April 3, 2009
PLANS APPROVAL DATE

LICENSED LANDSCAPE ARCHITECT
Gregory A. Balzer 2572
Signature
02-28-11
Renewal Date
03-04-09
Date
STATE OF CALIFORNIA

The State of California or its officers or agents shall not be responsible for the accuracy or completeness of electronic copies of this plan sheet.

To accompany plans dated 4-12-10

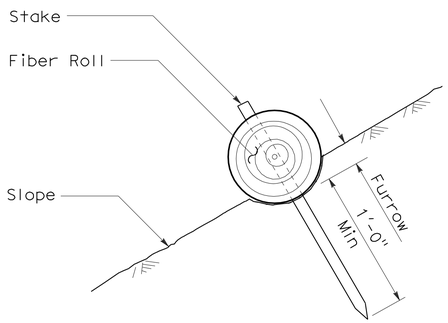

SECTION

FIBER ROLL
(TYPE 1)

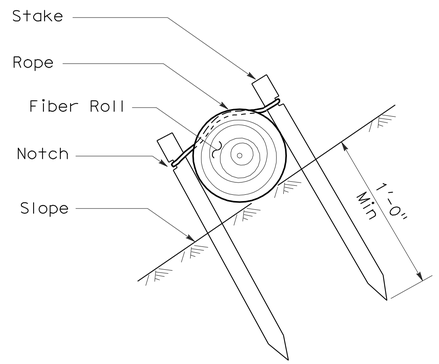

SECTION

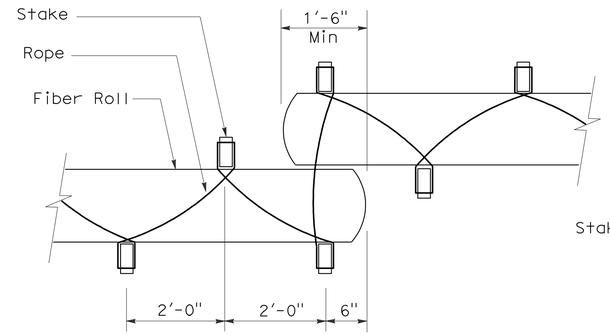

PLAN

FIBER ROLL
(TYPE 2)

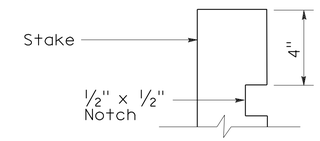

ELEVATION

STAKE NOTCH DETAIL

NOTES:

1. Fiber roll spacing varies depending upon slope inclination.
2. Installations shown in the perspectives are for slope inclination of 10:1 and steeper.

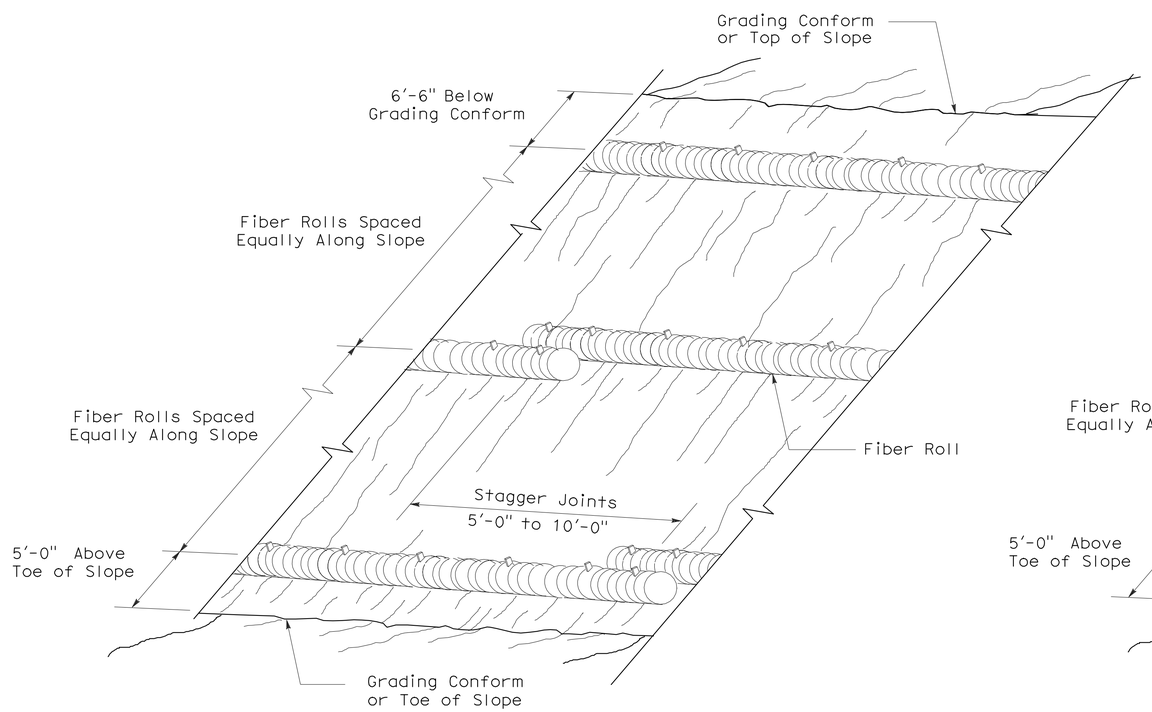

PERSPECTIVE

FIBER ROLL (TYPE 1)

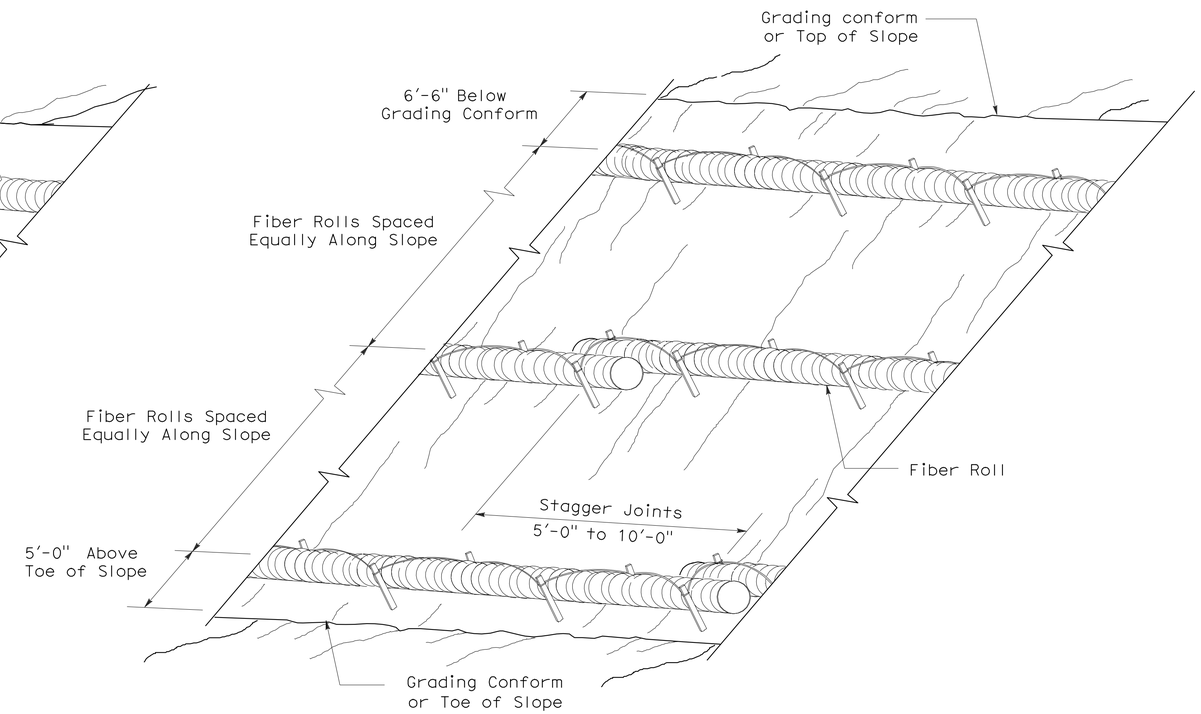

PERSPECTIVE

FIBER ROLL (TYPE 2)

STATE OF CALIFORNIA
DEPARTMENT OF TRANSPORTATION

EROSION CONTROL DETAILS (FIBER ROLL)

NO SCALE

RNSP H51 DATED APRIL 3, 2009 SUPERSEDES NSP H51 DATED DECEMBER 1, 2006 THAT SUPPLEMENTS THE STANDARD PLANS BOOK DATED MAY 2006.

REVISED NEW STANDARD PLAN RNSP H51

2006 REVISED NEW STANDARD PLAN RNSP H51

3-4-09

DIST	COUNTY	ROUTE	POST MILES TOTAL PROJECT	SHEET NO.	TOTAL SHEETS
01	Men,Lak	175	Var	28	32

Randell D. Hiatt
REGISTERED CIVIL ENGINEER

June 6, 2008
PLANS APPROVAL DATE

REGISTERED PROFESSIONAL ENGINEER
Randell D. Hiatt
No. C50200
Exp. 6-30-09
CIVIL
STATE OF CALIFORNIA

The State of California or its officers or agents shall not be responsible for the accuracy or completeness of electronic copies of this plan sheet.

To accompany plans dated 4-12-10

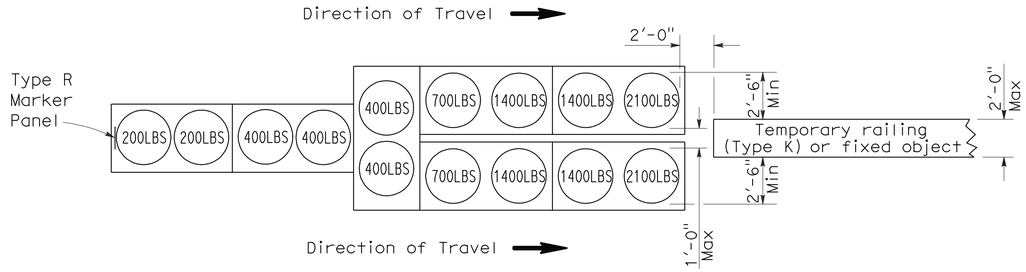

ARRAY `TU14'

Approach speed 45 mph or more

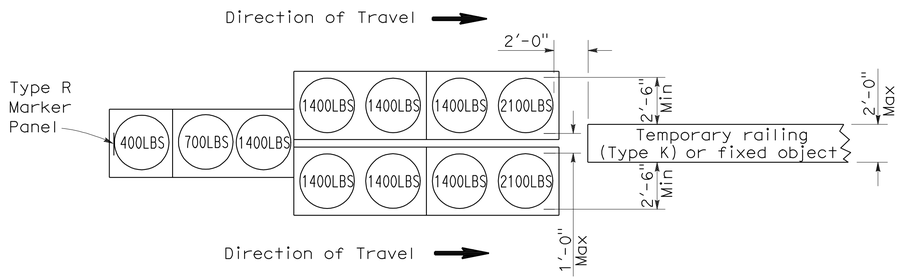

ARRAY `TU11'

Approach speed less than 45 mph

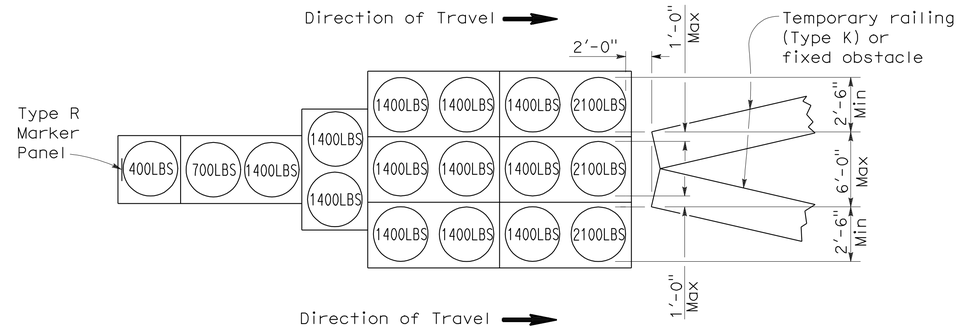

ARRAY `TU17'

Approach speed less than 45 mph

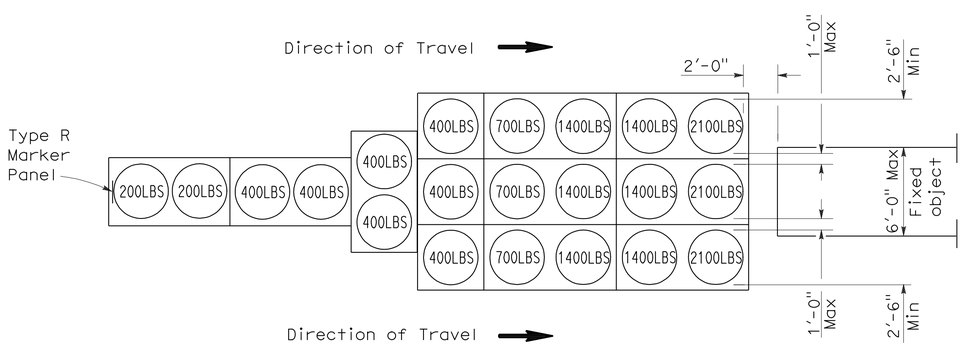

ARRAY `TU21'

Approach speed 45 mph or more

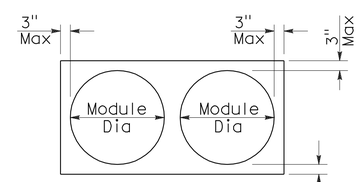

PLAN

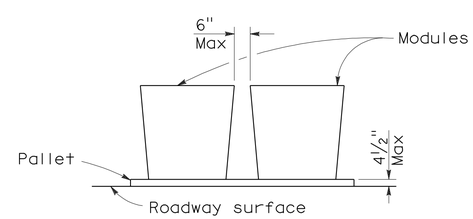

ELEVATION

CRASH CUSHION PALLET DETAIL

See Note 7

NOTES:

1. (XXX) Indicates sand filled module location and weight of sand in pounds for each module. Module spacing is based on the greater diameter of the module.
2. All sand weights are nominal.
3. Temporary crash cushion arrays shall not encroach on the traveled way.
4. Place the top of Type R marker panel 1" below the module lid.
5. Refer to Standard Plan A73B for marker details.
6. Approach speeds indicated conform to NCHRP 350 Report criteria.
7. Use of pallets is optional.

STATE OF CALIFORNIA
DEPARTMENT OF TRANSPORTATION

TEMPORARY CRASH CUSHION, SAND FILLED (UNIDIRECTIONAL)

NO SCALE

RSP T1A DATED JUNE 6, 2008 SUPERSEDES STANDARD PLAN T1A
DATED MAY 1, 2006 - PAGE 211 OF THE STANDARD PLANS BOOK DATED MAY 2006.

REVISED STANDARD PLAN RSP T1A

2006 REVISED STANDARD PLAN RSP T1A

DIST	COUNTY	ROUTE	POST MILES TOTAL PROJECT	SHEET NO.	TOTAL SHEETS
01	Men,Lak	175	Var	29	32

Randell D. Hiatt
REGISTERED CIVIL ENGINEER

June 6, 2008
PLANS APPROVAL DATE

REGISTERED PROFESSIONAL ENGINEER
Randell D. Hiatt
No. C50200
Exp. 6-30-09
CIVIL
STATE OF CALIFORNIA

The State of California or its officers or agents shall not be responsible for the accuracy or completeness of electronic copies of this plan sheet.

To accompany plans dated 4-12-10

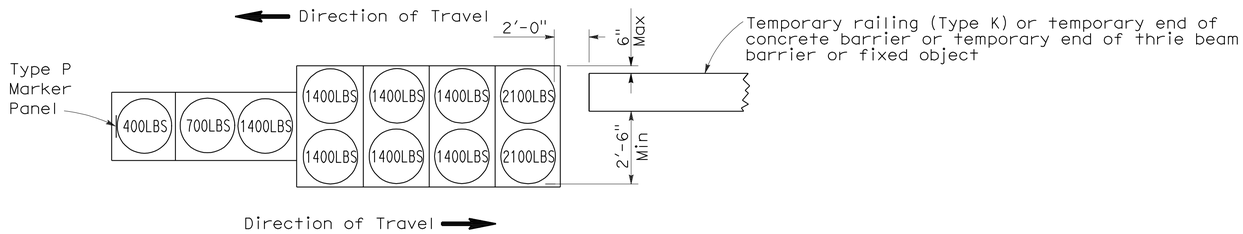

ARRAY 'TB11'

Approach speed less than 45 mph

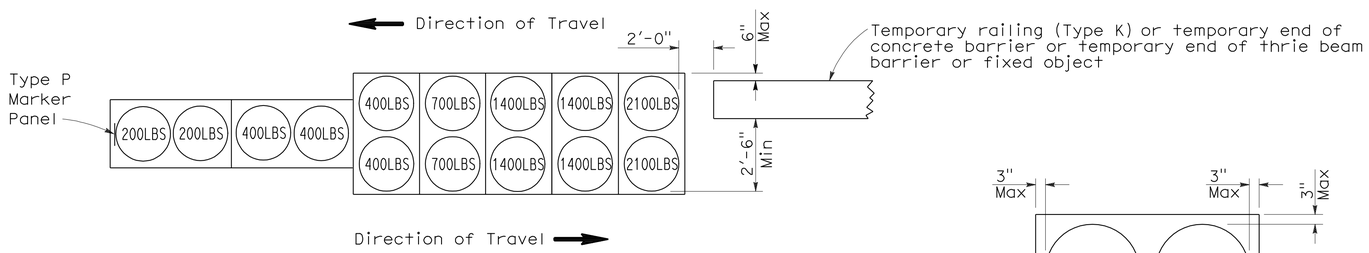

ARRAY 'TB14'

Approach speed 45 mph or more

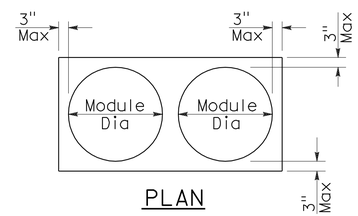

PLAN

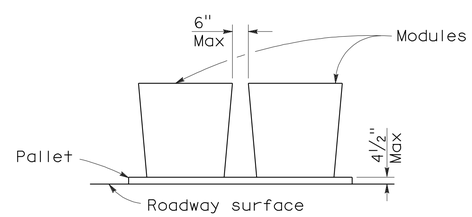

ELEVATION

CRASH CUSHION PALLET DETAIL

See Note 7

NOTES:

1. (XXX) Indicates sand filled module location and weight of sand in pounds for each module. Module spacing is based on the greater diameter of the module.
2. All sand weights are nominal.
3. Temporary crash cushion arrays shall not encroach on the traveled way.
4. Place the Type P marker panel so that the bottom of the panel rests upon the pallet.
5. Refer to Standard Plan A73B for marker details.
6. Approach speeds indicated conform to NCHRP 350 Report criteria.
7. Use of pallets is optional.

STATE OF CALIFORNIA
DEPARTMENT OF TRANSPORTATION

TEMPORARY CRASH CUSHION, SAND FILLED (BIDIRECTIONAL)

NO SCALE

RSP T1B DATED JUNE 6, 2008 SUPERSEDES STANDARD PLAN T1B
DATED MAY 1, 2006 - PAGE 212 OF THE STANDARD PLANS BOOK DATED MAY 2006.

REVISED STANDARD PLAN RSP T1B

2006 REVISED STANDARD PLAN RSP T1B

5-15-08

DIST	COUNTY	ROUTE	POST MILES TOTAL PROJECT	SHEET NO.	TOTAL SHEETS
01	Men,Lak	175	Var	30	32

Randell D. Hiatt
REGISTERED CIVIL ENGINEER

June 6, 2008
PLANS APPROVAL DATE

REGISTERED PROFESSIONAL ENGINEER
Randell D. Hiatt
No. C50200
Exp. 6-30-09
CIVIL
STATE OF CALIFORNIA

The State of California or its officers or agents shall not be responsible for the accuracy or completeness of electronic copies of this plan sheet.

To accompany plans dated 4-12-10

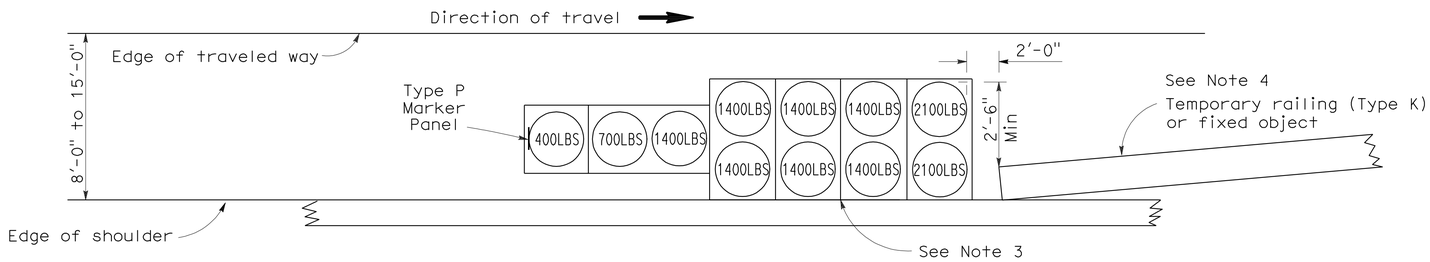

ARRAY 'TS11'

Approach speed less than 45 mph
See Note 9

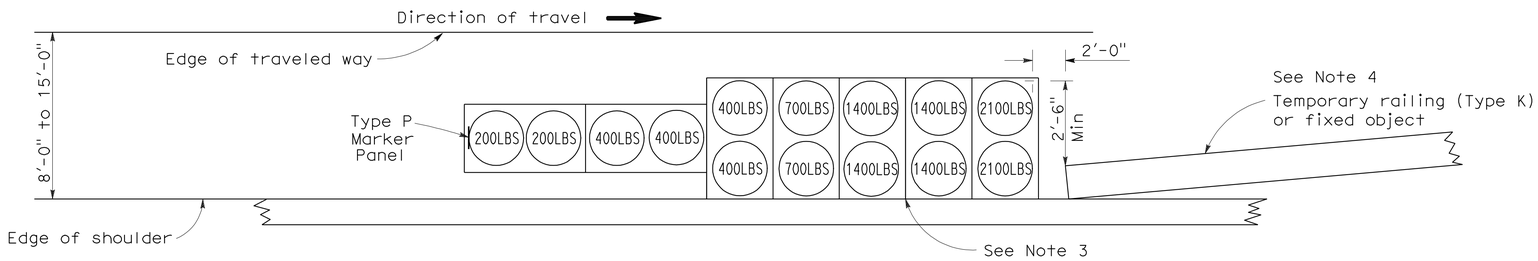

ARRAY 'TS14'

Approach speed 45 mph or more
See Note 9

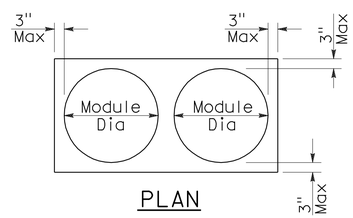

PLAN

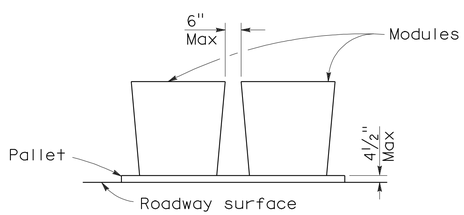

ELEVATION

CRASH CUSHION PALLET DETAIL

See Note 11

NOTES:

1. (XXX) Indicates sand filled module location and weight of sand in pounds for each module. Module spacing is based on the greater diameter of the module.
2. All sand weights are nominal.
3. The temporary crash cushion arrays shown on this plan shall be used only in locations where there will be traffic on one side of the temporary crash cushion array.
4. If the fixed object or approach end of the temporary railing is less than 15'-0" from the edge of traveled way, a temporary crash cushion is required in a construction or work zone.
5. Temporary crash cushion arrays shall not encroach on the traveled way.
6. Arrays for median shoulders shall conform to details shown on this plan for outside shoulders.
7. Place the Type P marker panel so that the bottom of the panel rests upon the pallet and faces traffic.
8. Refer to Standard Plan A73B for marker details.
9. For shoulder widths less than 8'-0", appropriate approved crash cushion protection, other than sand filled modules, shall be provided at fixed objects and at approach ends of temporary railing. The specific type of crash cushion shall be as shown on the project plans or as specified in the Special Provisions, or if not shown on the project plans or specified in the Special Provisions, shall be as approved by the Engineer.
10. Approach speeds indicated conform to NCHRP 350 Report criteria.
11. Use of pallets is optional.

STATE OF CALIFORNIA
DEPARTMENT OF TRANSPORTATION

TEMPORARY CRASH CUSHION, SAND FILLED (SHOULDER INSTALLATIONS)

NO SCALE

RSP T2 DATED JUNE 6, 2008 SUPERSEDES STANDARD PLAN T2
DATED MAY 1, 2006 - PAGE 213 OF THE STANDARD PLANS BOOK DATED MAY 2006.

REVISED STANDARD PLAN RSP T2

2006 REVISED STANDARD PLAN RSP T2

5-15-08

DIST	COUNTY	ROUTE	POST MILES TOTAL PROJECT	SHEET NO.	TOTAL SHEETS
01	Men,Lak	175	Var	31	32

LICENSED LANDSCAPE ARCHITECT

April 3, 2009
PLANS APPROVAL DATE

The State of California or its officers or agents shall not be responsible for the accuracy or completeness of electronic copies of this plan sheet.

LICENSED LANDSCAPE ARCHITECT — Robert B. Schott — Signature — 11-30-10 Renewal Date — 2-25-09 Date — STATE OF CALIFORNIA

To accompany plans dated 4-12-10

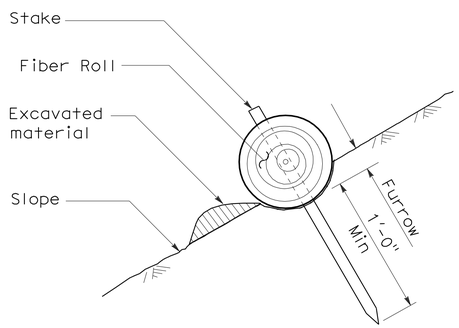

SECTION

TEMPORARY FIBER ROLL (TYPE 1)

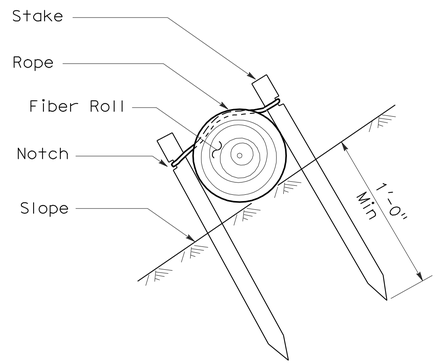

SECTION

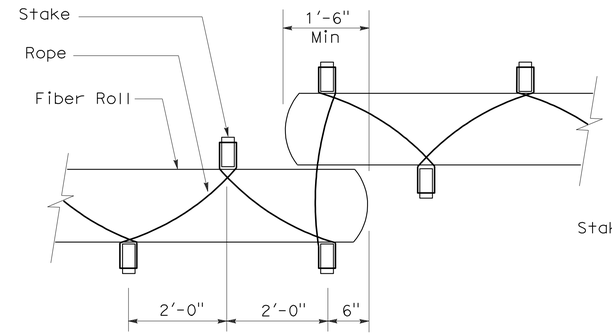

PLAN

TEMPORARY FIBER ROLL (TYPE 2)

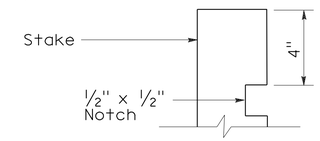

ELEVATION

STAKE NOTCH DETAIL

NOTES:

1. Temporary fiber roll spacing varies depending upon slope inclination.
2. Installations shown in the perspectives are for slope inclination of 10:1 and steeper.

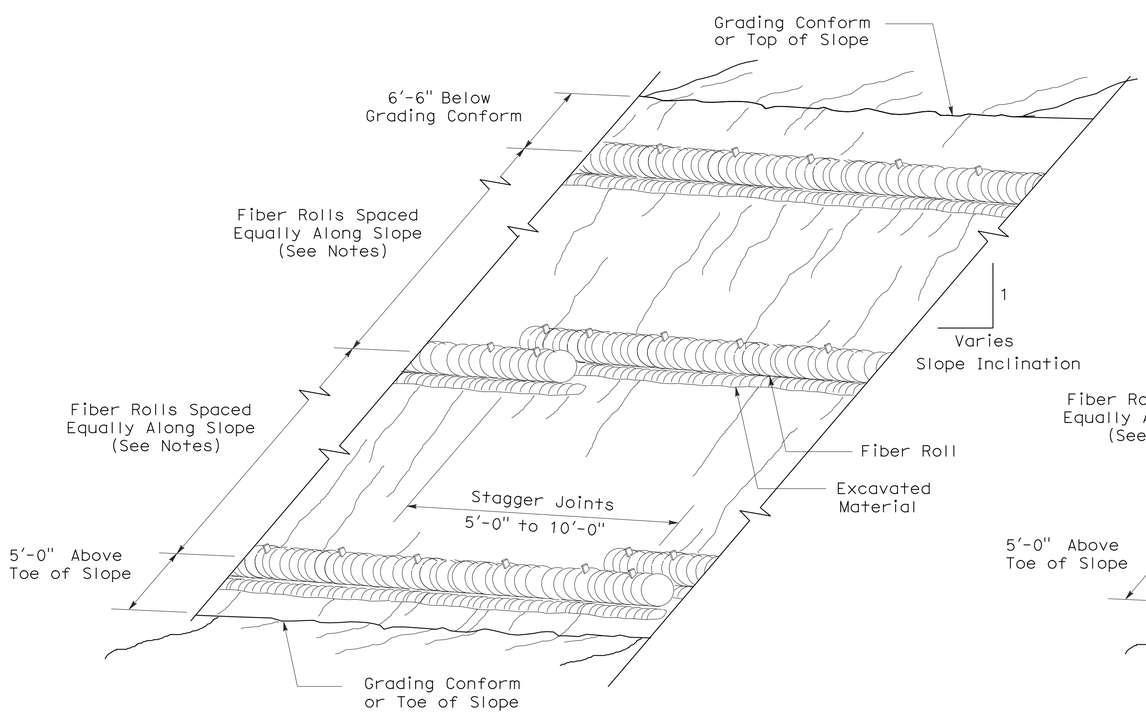

PERSPECTIVE

TEMPORARY FIBER ROLL (TYPE 1)

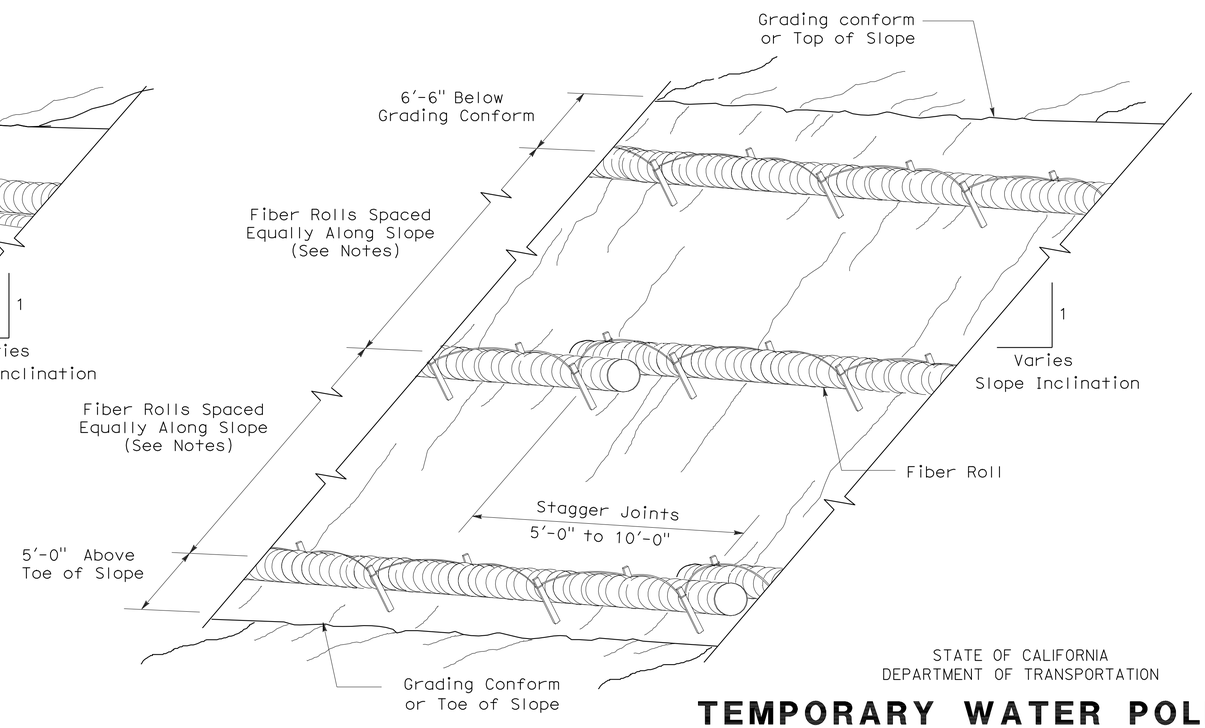

PERSPECTIVE

TEMPORARY FIBER ROLL (TYPE 2)

STATE OF CALIFORNIA
DEPARTMENT OF TRANSPORTATION

TEMPORARY WATER POLLUTION CONTROL DETAILS (TEMPORARY FIBER ROLL)

NO SCALE

RSP T56 DATED APRIL 3, 2009 SUPERSEDES STANDARD PLAN T56
DATED MAY 1, 2006 - PAGE 232 OF THE STANDARD PLANS BOOK DATED MAY 2006.

REVISED STANDARD PLAN RSP T56

2006 REVISED STANDARD PLAN RSP T56

DIST	COUNTY	ROUTE	POST MILES TOTAL PROJECT	SHEET NO.	TOTAL SHEETS
01	Men,Lak	175	Var	32	32

Robert B Schott
LICENSED LANDSCAPE ARCHITECT

April 3, 2009
PLANS APPROVAL DATE

LICENSED LANDSCAPE ARCHITECT
Robert B. Schott 3025
Robert B Schott
Signature
11-30-10
Renewal Date
2-25-09
Date
STATE OF CALIFORNIA

The State of California or its officers or agents shall not be responsible for the accuracy or completeness of electronic copies of this plan sheet.

To accompany plans dated 4-12-10

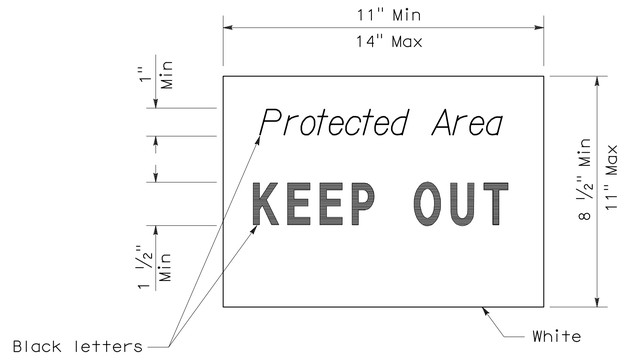

SIGN DETAIL

NOTE:

1. Temporary silt fence and temporary straw bale barrier shown for reference purposes only.

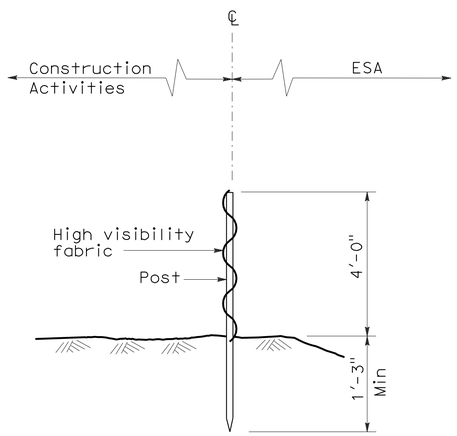

SECTION
TEMPORARY FENCE (TYPE ESA)

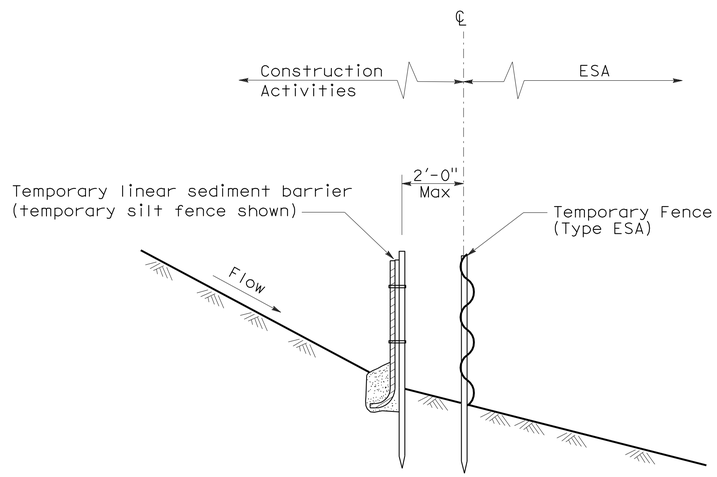

SECTION
PLACEMENT DETAIL
FOR TEMPORARY LINEAR SEDIMENT BARRIER
USED WITH TEMPORARY
FENCE (TYPE ESA)
(See Note 1)

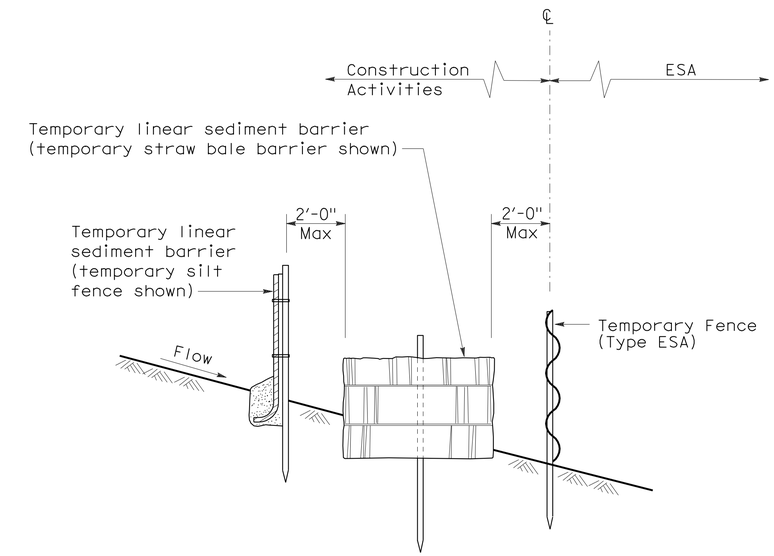

SECTION
PLACEMENT DETAIL
FOR TEMPORARY SILT FENCE
AND TEMPORARY STRAW BALE BARRIER
USED WITH TEMPORARY FENCE (TYPE ESA)
(See Note 1)

STATE OF CALIFORNIA
DEPARTMENT OF TRANSPORTATION

TEMPORARY WATER POLLUTION CONTROL DETAILS [TEMPORARY FENCE (TYPE ESA)]

NO SCALE

NSP T65 DATED APRIL 3, 2009 SUPPLEMENTS
THE STANDARD PLANS BOOK DATED MAY 2006.

NEW STANDARD PLAN NSP T65

2006 NEW STANDARD PLAN NSP T65