ER-43J5(004)E

Dist	COUNTY	ROUTE	POST MILES TOTAL PROJECT	SHEET No.	TOTAL SHEETS
01	Men	162	20.0/21.2	1	39

STATE OF CALIFORNIA
DEPARTMENT OF TRANSPORTATION

PROJECT PLANS FOR CONSTRUCTION ON
STATE HIGHWAY

IN MENDOCINO COUNTY
NEAR COVELO AT VARIOUS LOCATIONS
FROM 3.7 MILES EAST OF MIDDLE FORK EEL RIVER BRIDGE
TO 4.8 MILES WEST OF FAIRBANKS ROAD

TO BE SUPPLEMENTED BY STANDARD PLANS DATED MAY 2006

INDEX OF PLANS

SHEET No.	DESCRIPTION
1	TITLE AND LOCATION MAP
2-3	TYPICAL CROSS SECTIONS
4-6	LAYOUTS
7-17	DRAINAGE PLANS, PROFILES, DETAILS AND QUANTITIES
18	CONSTRUCTION AREA SIGNS
19-23	STAGE CONSTRUCTION PLANS
24-27	PAVEMENT DELINEATION PLANS, DETAILS AND QUANTITIES
28	SUMMARY OF QUANTITIES
29-39	REVISED AND NEW STANDARD PLANS

THE STANDARD PLANS LIST APPLICABLE TO THIS CONTRACT IS INCLUDED IN THE NOTICE TO BIDDERS AND SPECIAL PROVISIONS BOOK.

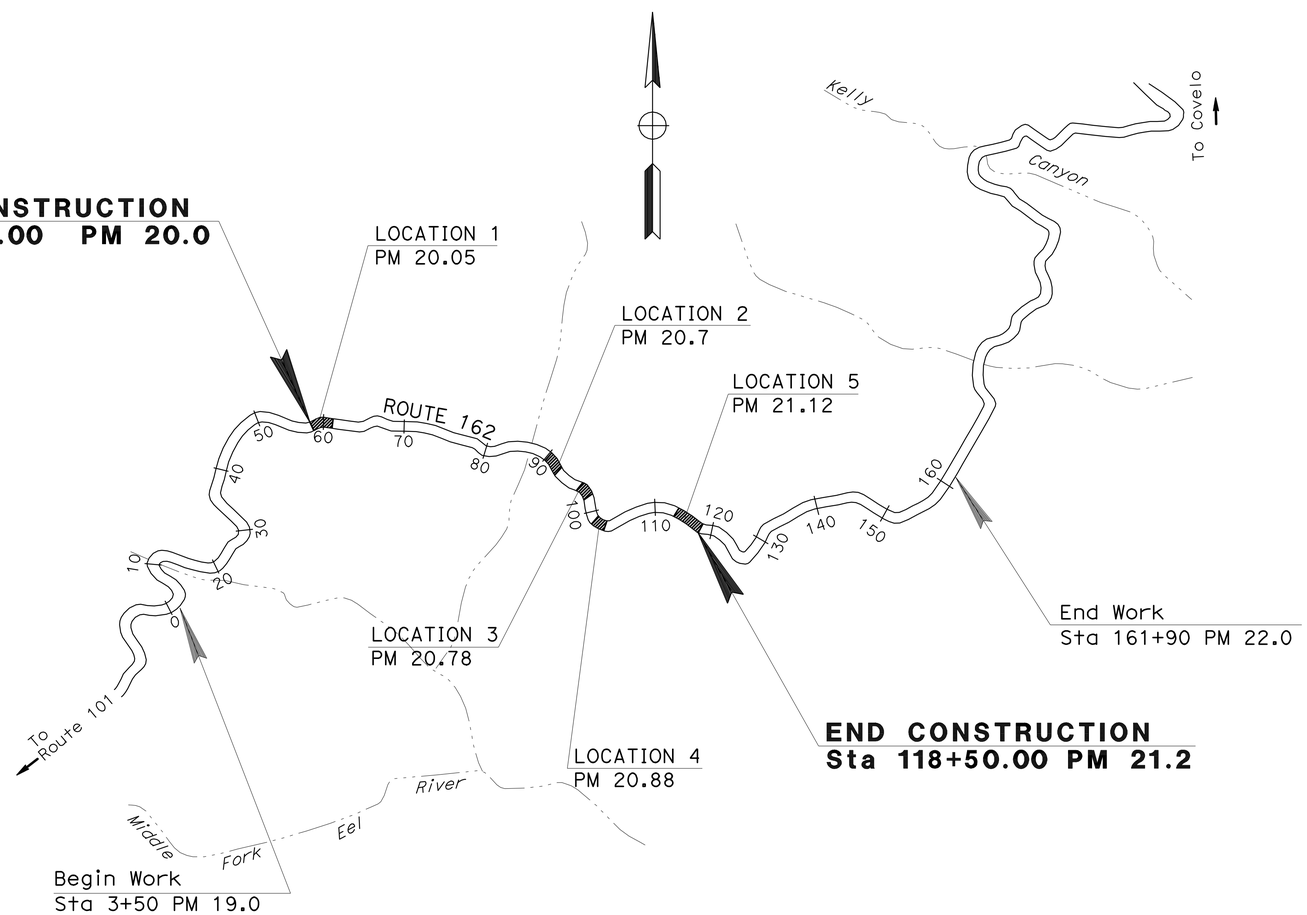

NO SCALE

THE CONTRACTOR SHALL POSSESS THE CLASS (OR CLASSES) OF LICENSE AS SPECIFIED IN THE "NOTICE TO BIDDERS."

Leobardo Morales 7-22-09
PROJECT ENGINEER DATE
REGISTERED CIVIL ENGINEER

REGISTERED PROFESSIONAL ENGINEER
LEOBARDO MORALES
No. 72023
Exp. 6-30-10
CIVIL
STATE OF CALIFORNIA

October 12, 2009
PLANS APPROVAL DATE

THE STATE OF CALIFORNIA OR ITS OFFICERS OR AGENTS SHALL NOT BE RESPONSIBLE FOR THE ACCURACY OR COMPLETENESS OF SCANNED COPIES OF THIS PLAN SHEET.

PROJECT MANAGER FRANK DEMLING
DESIGN ENGINEER NESAR FORMOLI

LAST REVISION 00-00-00
DATE PLOTTED => 13-JAN-2010
TIME PLOTTED => 05:33

CONTRACT No. 01-476404

Dist	COUNTY	ROUTE	POST MILES TOTAL PROJECT	SHEET No.	TOTAL SHEETS
01	Men	162	20.0/21.2	2	39

Leobardo Morales 7-22-09
REGISTERED CIVIL ENGINEER DATE

10-12-09
PLANS APPROVAL DATE

REGISTERED PROFESSIONAL ENGINEER
LEOBARDO MORALES
No. 72023
Exp. 6-30-10
CIVIL
STATE OF CALIFORNIA

THE STATE OF CALIFORNIA OR ITS OFFICERS OR AGENTS SHALL NOT BE RESPONSIBLE FOR THE ACCURACY OR COMPLETENESS OF SCANNED COPIES OF THIS PLAN SHEET.

NOTES:

1. DIMENSIONS OF THE STRUCTURAL SECTIONS ARE SUBJECT TO TOLERANCES SPECIFIED IN THE STANDARD SPECIFICATIONS.
2. SUPERELEVATION AS SHOWN OR AS DIRECTED BY THE ENGINEER.
3. SEE LAYOUT SHEETS FOR PAVEMENT REPLACEMENT LIMITS

LEGEND

[No.] STRUCTURAL SECTION

DESIGN DESIGNATION

20 YEAR TI=8.0
ADT(2005)=860
ADT(2007)=900
ADT(2017)=1,120

STRUCTURAL SECTIONS:

[1] — 0.40′ HMA (TYPE A)
0.65′ AB (CI 2)
0.80′ AS (CI 2)

[5] — 0.40′ HMA (TYPE A)
0.65′ AB (CI 2)
0.35′ AS (CI 2)

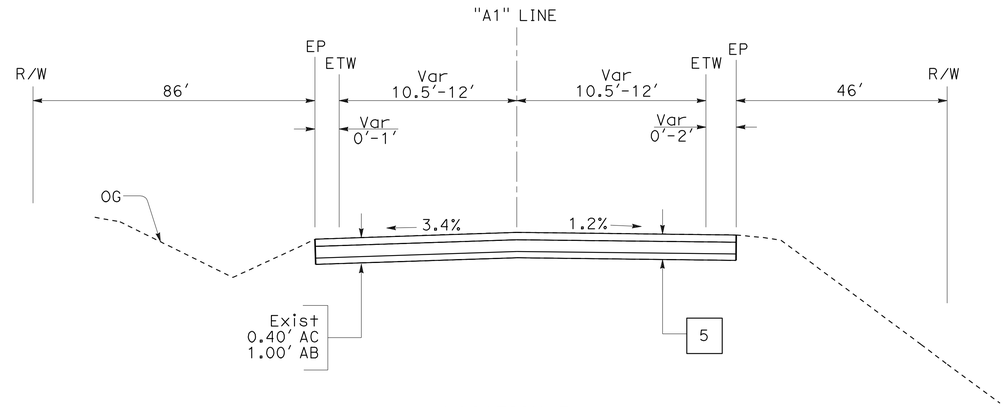

LOCATION 5
"A1" 115+00.00 TO 118+50.00

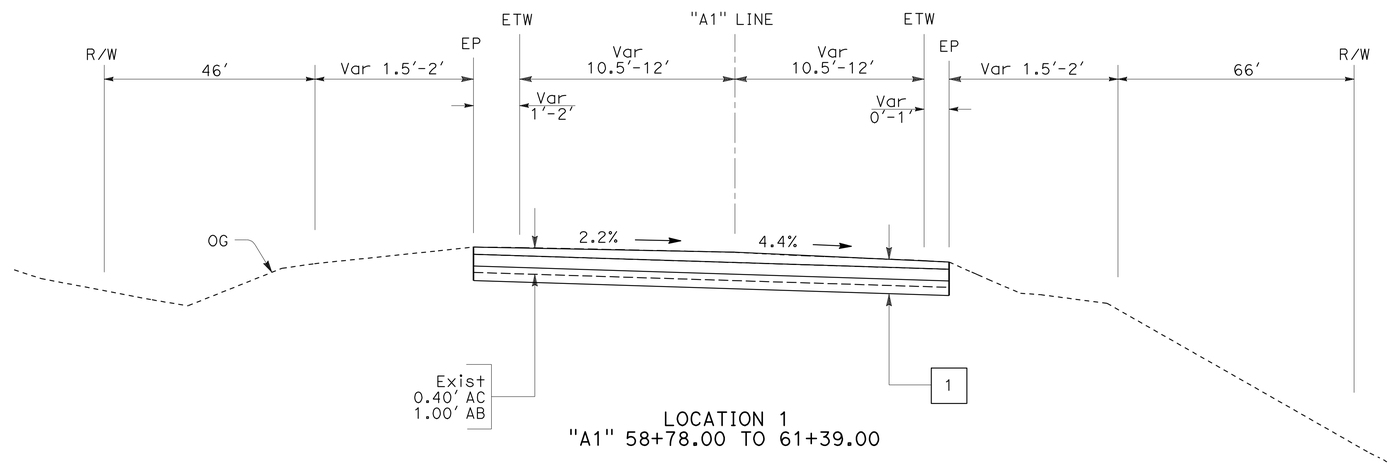

LOCATION 1
"A1" 58+78.00 TO 61+39.00

ROUTE 162

TYPICAL CROSS SECTIONS

NO SCALE

X-1

REVISED BY	DATE REVISED

CALCULATED-DESIGNED BY	CHECKED BY
L. MORALES	N. FORMOLI

FUNCTIONAL SUPERVISOR: NESAR FORMOLI

STATE OF CALIFORNIA - DEPARTMENT OF TRANSPORTATION
Caltrans
NORTH REGION
OFFICE OF DESIGN, SOUTH
DESIGN BRANCH S14

05:47 20-OCT-2009 trmikesl R:\PSE\01-476401\147640ca001.dgn

LAST REVISION 00-00-00 | DATE PLOTTED => 20-OCT-2009 | TIME PLOTTED => 05:47

Dist	COUNTY	ROUTE	POST MILES TOTAL PROJECT	SHEET No.	TOTAL SHEETS
01	Men	162	20.0/21.2	3	39

REGISTERED CIVIL ENGINEER DATE 7-22-09

10-12-09
PLANS APPROVAL DATE

REGISTERED PROFESSIONAL ENGINEER LEOBARDO MORALES No. 72023 Exp. 6-30-10 CIVIL STATE OF CALIFORNIA

THE STATE OF CALIFORNIA OR ITS OFFICERS OR AGENTS SHALL NOT BE RESPONSIBLE FOR THE ACCURACY OR COMPLETENESS OF SCANNED COPIES OF THIS PLAN SHEET.

NOTES:

1. DIMENSIONS OF THE STRUCTURAL SECTIONS ARE SUBJECT TO TOLERANCES SPECIFIED IN THE STANDARD SPECIFICATIONS.
2. SUPERELEVATION AS SHOWN OR AS DIRECTED BY THE ENGINEER.
3. SEE LAYOUT SHEETS FOR PAVEMENT REPLACEMENT LIMITS
4. FOR GEOSYNTHETIC REINFORCED EMBANKMENT DRAINAGE, SEE DRAINAGE DETAILS.

DESIGN DESIGNATION

20 YEAR TI=8.0
ADT(2005)=860
ADT(2007)=900
ADT(2017)=1,120

STRUCTURAL SECTIONS:

[2] 0.40′ HMA (TYPE A)
0.65′ AB (Cl 2)
0.40′ AS (Cl 2)

[3] 0.40′ HMA (TYPE A)
0.65′ AB (Cl 2)
0.90′ AS (Cl 2)

[4] 0.40′ HMA (TYPE A)
0.45′ AB (Cl 2)

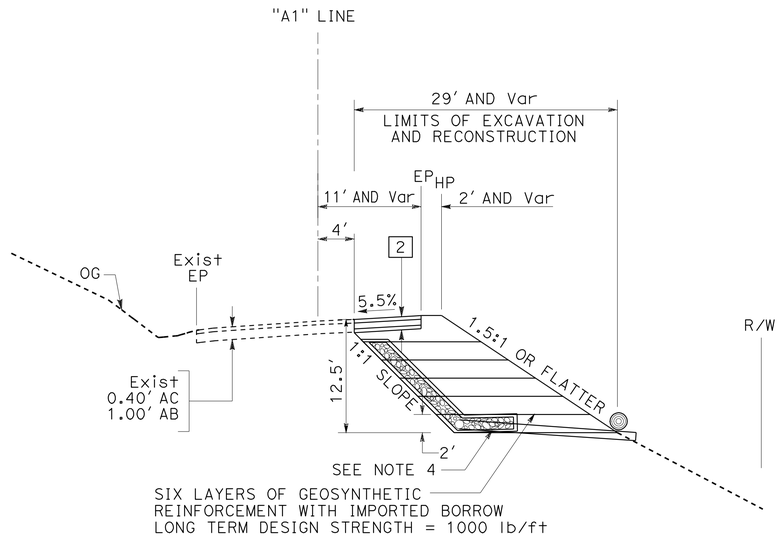

LOCATION 2
"A1" 93+23.00 TO 94+50.00

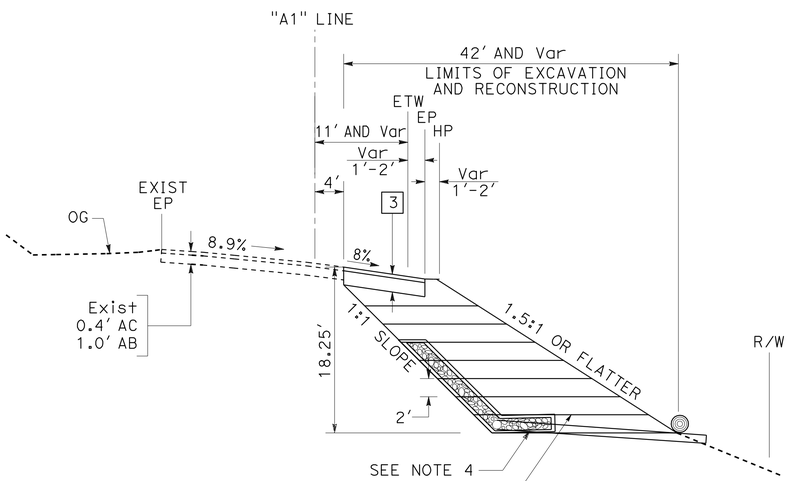

LOCATION 3
"A1" 97+40.00 TO 98+28.00

ROUTE 162

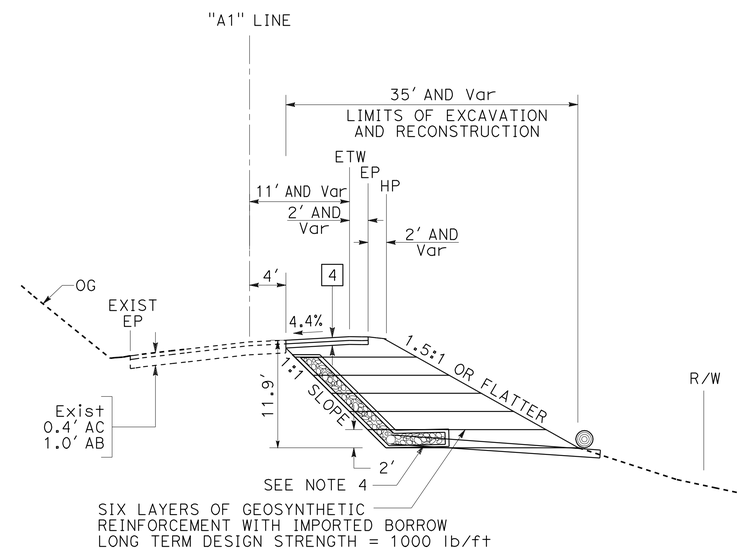

LOCATION 4
"A1" 102+34.00 TO 103+10.00

TYPICAL CROSS SECTIONS
GEOSYNTHETIC REINFORCED EMBANKMENT

NO SCALE

X-2

REVISED BY | DATE REVISED
L. MORALES | N. FORMOLI
CALCULATED-DESIGNED BY | CHECKED BY
FUNCTIONAL SUPERVISOR
NESAR FORMOLI

STATE OF CALIFORNIA - DEPARTMENT OF TRANSPORTATION
Caltrans
NORTH REGION
OFFICE OF DESIGN, SOUTH
DESIGN BRANCH S14

05:47 20-OCT-2009 trmikesl R:\PSE\01-476401\147640ca002.dgn

LAST REVISION 00-00-00 | DATE PLOTTED => 20-OCT-2009 TIME PLOTTED => 05:47

Dist	COUNTY	ROUTE	POST MILES TOTAL PROJECT	SHEET No.	TOTAL SHEETS
01	Men	162	20.0/21.2	4	39

Leobardo Morales 7-22-09
REGISTERED CIVIL ENGINEER DATE

10-12-09
PLANS APPROVAL DATE

REGISTERED PROFESSIONAL ENGINEER
LEOBARDO MORALES
No. 72023
Exp. 6-30-10
CIVIL
STATE OF CALIFORNIA

THE STATE OF CALIFORNIA OR ITS OFFICERS OR AGENTS SHALL NOT BE RESPONSIBLE FOR THE ACCURACY OR COMPLETENESS OF SCANNED COPIES OF THIS PLAN SHEET.

NOTE:

FOR ACCURATE RIGHT OF WAY AND ACCESS DATA, CONTACT RIGHT OF WAY ENGINEERING AT THE DISTRICT OFFICE.

LEGEND

ROADWAY RECONSTRUCTION

GR

TSF TEMPORARY SILT FENCE

ABBREVIATIONS

GR GEOSYNTHETIC REINFORCEMENT

CURVE DATA

No.	R	Δ	T	L
1	400.000	28°34'19.05"	101.854	199.470
2	420.000	20°40'41.60"	76.623	151.579
3	380.000	35°44'10.48"	122.503	237.012
4	420.000	34°6'19.97"	128.830	250.007
5	312.001	39°28'37.00"	111.949	214.969

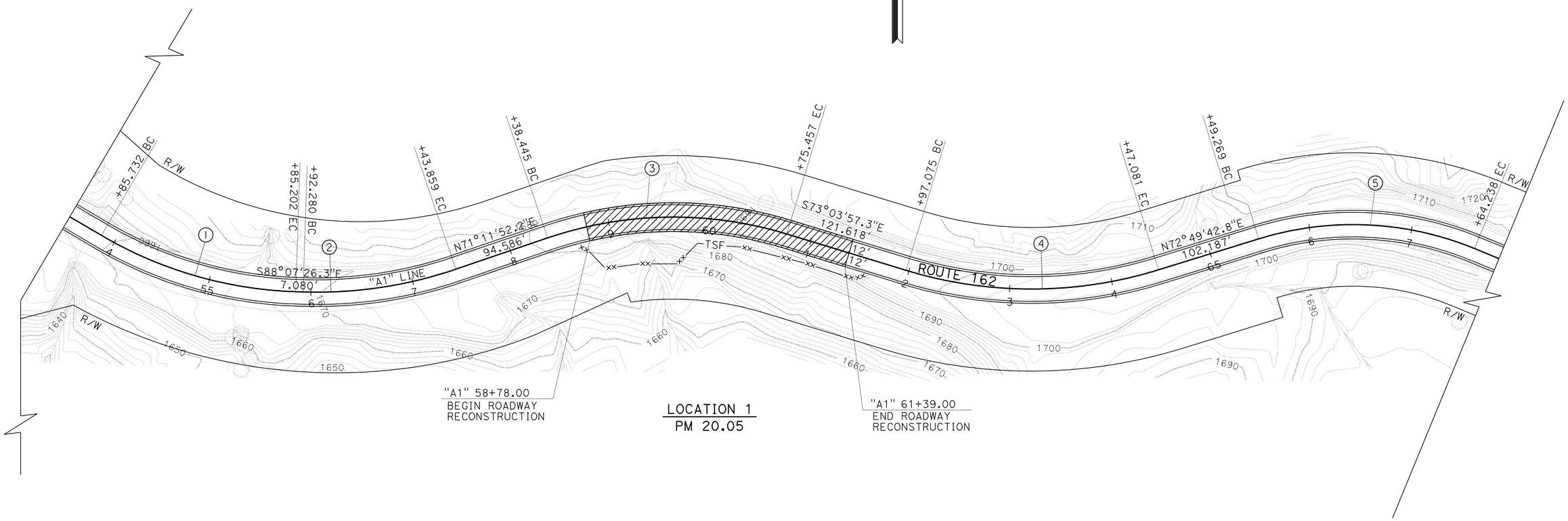

LOCATION 1
PM 20.05

LAYOUT
SCALE: 1"=50'

L-1

REVISED BY | DATE REVISED
L. MORALES | N. FORMOLI
CALCULATED-DESIGNED BY | CHECKED BY
FUNCTIONAL SUPERVISOR
NESAR FORMOLI

STATE OF CALIFORNIA - DEPARTMENT OF TRANSPORTATION
Caltrans
NORTH REGION
OFFICE OF DESIGN, SOUTH
DESIGN BRANCH S14

05:47 20-OCT-2009 trmikesl R:\PSE\01-476401\147640ea001.dgn

LAST REVISION 00-00-00 | DATE PLOTTED => 20-OCT-2009 | TIME PLOTTED => 05:47

Dist	COUNTY	ROUTE	POST MILES TOTAL PROJECT	SHEET No.	TOTAL SHEETS
01	Men	162	20.0/21.2	5	39

Leobardo Morales 7-22-09
REGISTERED CIVIL ENGINEER DATE

10-12-09
PLANS APPROVAL DATE

REGISTERED PROFESSIONAL ENGINEER
LEOBARDO MORALES
No. 72023
Exp. 6-30-10
CIVIL
STATE OF CALIFORNIA

THE STATE OF CALIFORNIA OR ITS OFFICERS OR AGENTS SHALL NOT BE RESPONSIBLE FOR THE ACCURACY OR COMPLETENESS OF SCANNED COPIES OF THIS PLAN SHEET.

NOTE:

FOR ACCURATE RIGHT OF WAY AND ACCESS DATA, CONTACT RIGHT OF WAY ENGINEERING AT THE DISTRICT OFFICE.

CURVE DATA

No.	R	Δ	T	L
6	310.006	30°55′55.35"	85.774	167.362
7	210.000	54°16′39.17"	107.642	198.938
8	310.032	15°31′11.22"	42.248	83.979
9	242.003	23°34′47.04"	50.512	99.595
10	199.995	21°42′36.30"	38.350	75.780
11	149.998	29°26′18.70"	39.405	77.069
12	419.993	19°20′14.69"	71.555	141.748

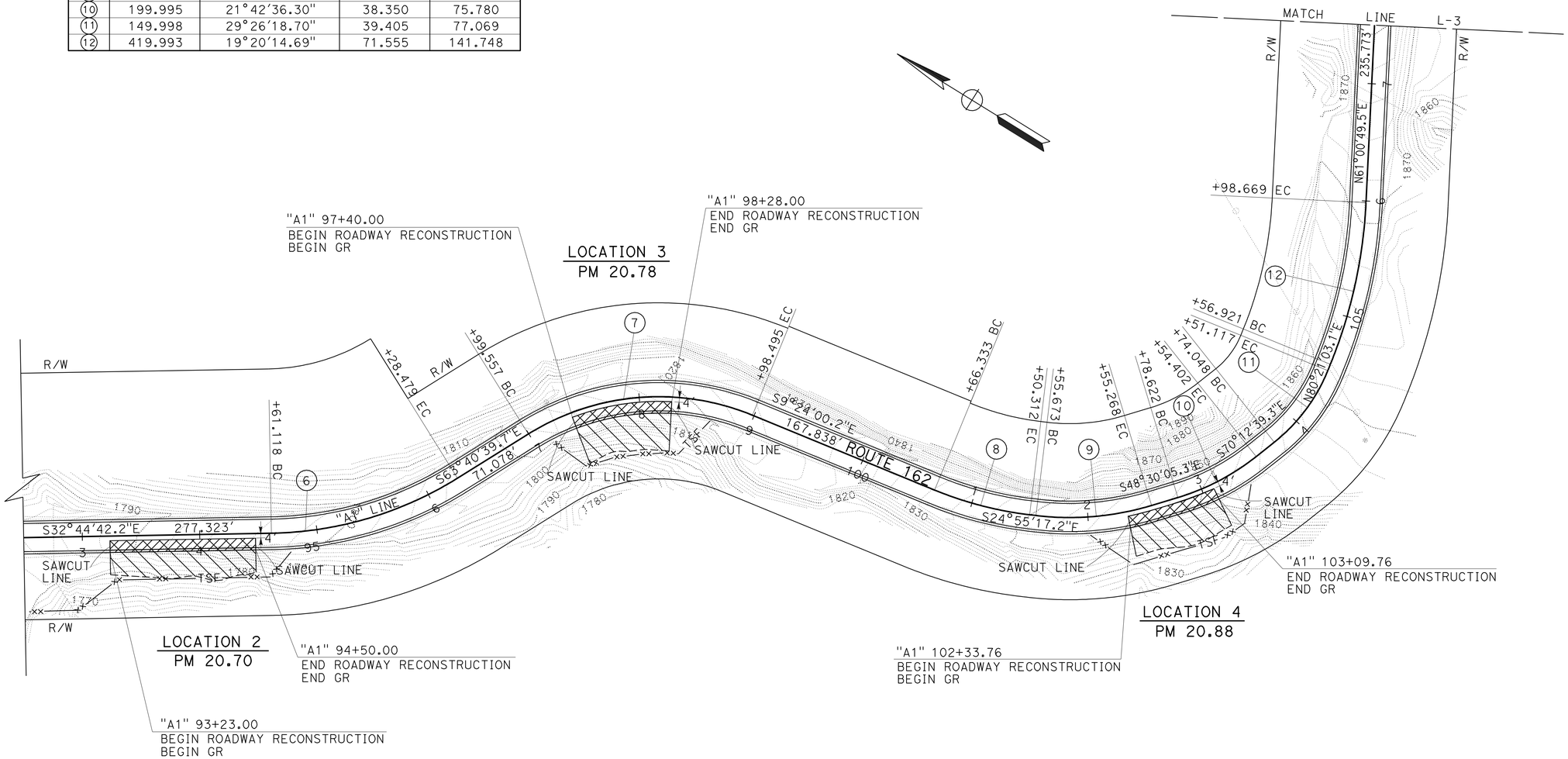

LAYOUT
SCALE: 1"=50′

L-2

REVISED BY	DATE REVISED

CALCULATED-DESIGNED BY: L. MORALES
CHECKED BY: N. FORMOLI
FUNCTIONAL SUPERVISOR: NESAR FORMOLI

STATE OF CALIFORNIA - DEPARTMENT OF TRANSPORTATION
Caltrans
NORTH REGION
OFFICE OF DESIGN, SOUTH
DESIGN BRANCH S14

05:47 20-OCT-2009 trmikesl R:\PSE\01-476401\147640ea002.dgn

LAST REVISION 00-00-00 | DATE PLOTTED => 20-OCT-2009 | TIME PLOTTED => 05:47

Dist	COUNTY	ROUTE	POST MILES TOTAL PROJECT	SHEET No.	TOTAL SHEETS
01	Men	162	20.0/21.2	6	39

Leobardo Morales 7-22-09
REGISTERED CIVIL ENGINEER DATE

10-12-09
PLANS APPROVAL DATE

REGISTERED PROFESSIONAL ENGINEER
LEOBARDO MORALES
No. 72023
Exp. 6-30-10
CIVIL
STATE OF CALIFORNIA

THE STATE OF CALIFORNIA OR ITS OFFICERS OR AGENTS SHALL NOT BE RESPONSIBLE FOR THE ACCURACY OR COMPLETENESS OF SCANNED COPIES OF THIS PLAN SHEET.

NOTE:

FOR ACCURATE RIGHT OF WAY AND ACCESS DATA, CONTACT RIGHT OF WAY ENGINEERING AT THE DISTRICT OFFICE.

CURVE DATA

No.	R	Δ	T	L
13	585.000	66°35′48.86"	384.250	679.966
14	489.997	24°43′39.44"	107.408	211.472
15	325.001	54°23′18.52"	166.987	308.510

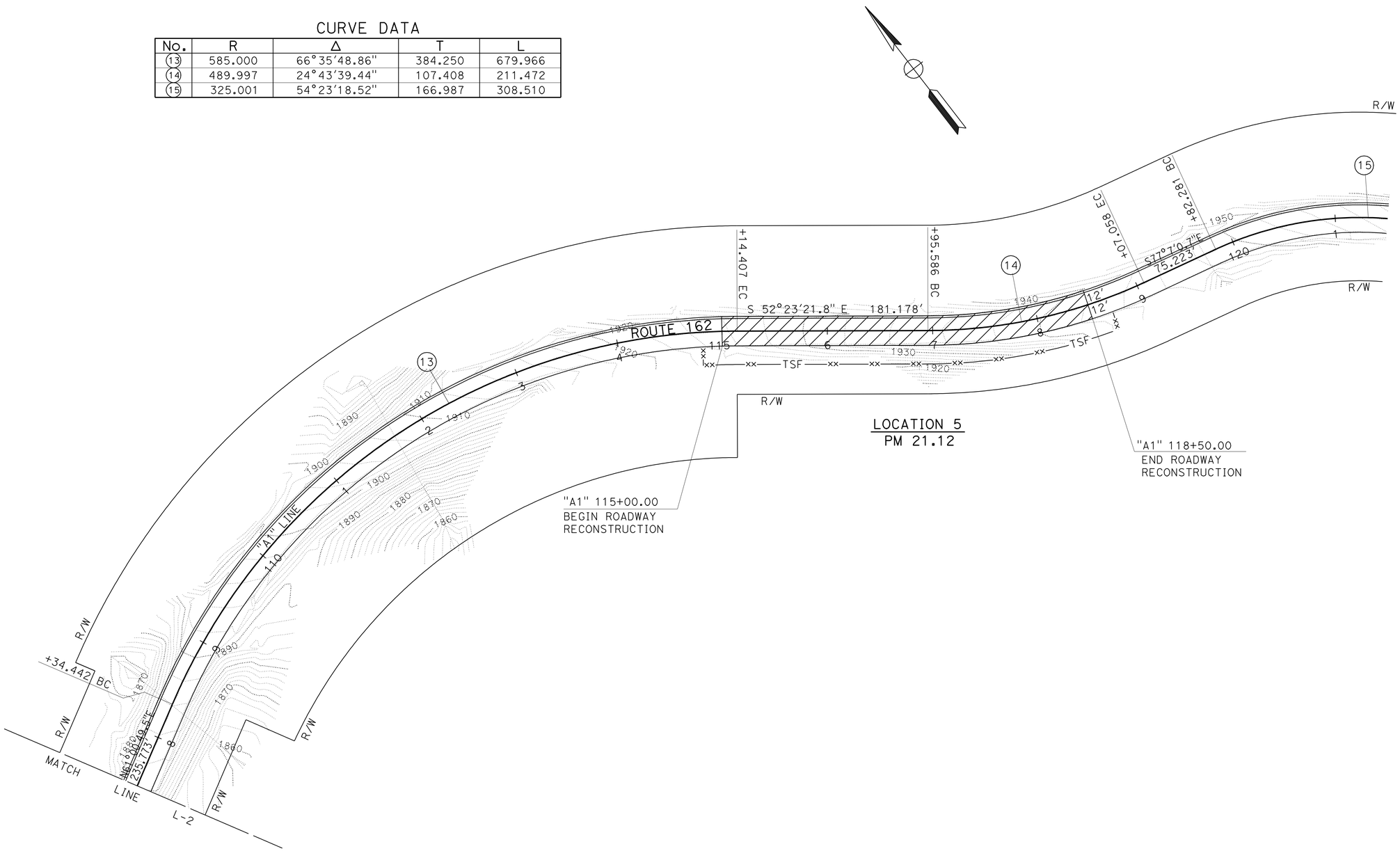

LAYOUT
SCALE: 1"=50′

L-3

STATE OF CALIFORNIA - DEPARTMENT OF TRANSPORTATION
Caltrans
NORTH REGION
OFFICE OF DESIGN, SOUTH
DESIGN BRANCH S14

FUNCTIONAL SUPERVISOR: NESAR FORMOLI
CALCULATED-DESIGNED BY: L. MORALES
CHECKED BY: N. FORMOLI
REVISED BY
DATE REVISED

05:47 20-OCT-2009 trmikesl R:\PSE\01-476401\147640ea003.dgn

LAST REVISION 00-00-00
DATE PLOTTED => 20-OCT-2009
TIME PLOTTED => 05:47

BORDER LAST REVISED 4/11/2008
RELATIVE BORDER SCALE IS IN INCHES 0 1 2 3
USERNAME => trmikesl
DGN FILE => 147640ea003.dgn
CU 03264
EA 476401

Dist	COUNTY	ROUTE	POST MILES TOTAL PROJECT	SHEET No.	TOTAL SHEETS
01	Men	162	20.0/21.2	7	39

Leobardo Morales 7-22-09
REGISTERED CIVIL ENGINEER DATE

10-12-09
PLANS APPROVAL DATE

REGISTERED PROFESSIONAL ENGINEER
LEOBARDO MORALES
No. 72023
Exp. 6-30-10
CIVIL
STATE OF CALIFORNIA

THE STATE OF CALIFORNIA OR ITS OFFICERS OR AGENTS SHALL NOT BE RESPONSIBLE FOR THE ACCURACY OR COMPLETENESS OF SCANNED COPIES OF THIS PLAN SHEET.

NOTE:

FOR ACCURATE RIGHT OF WAY AND ACCESS DATA, CONTACT RIGHT OF WAY ENGINEERING AT THE DISTRICT OFFICE.

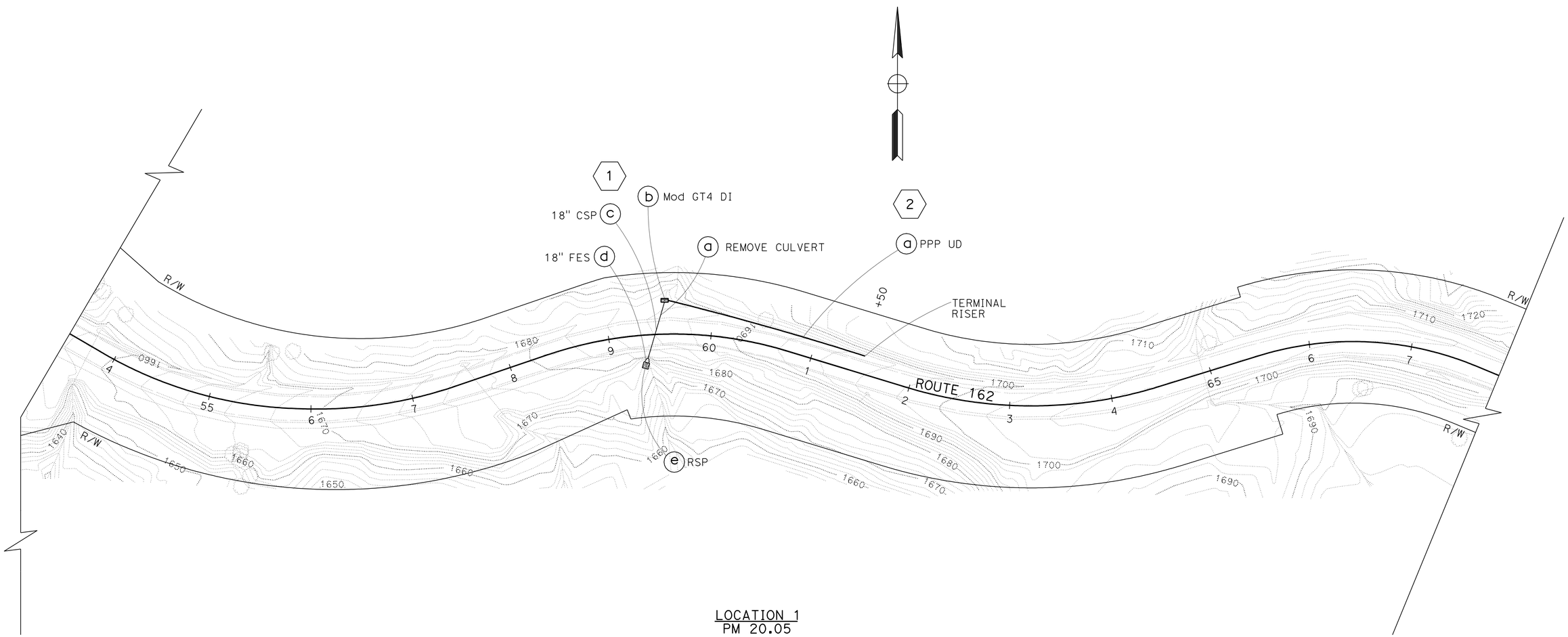

LOCATION 1
PM 20.05

THIS PLAN ACCURATE FOR DRAINAGE WORK ONLY.

DRAINAGE PLAN

SCALE: 1"=50'

D-1

STATE OF CALIFORNIA - DEPARTMENT OF TRANSPORTATION
Caltrans
NORTH REGION
OFFICE OF DESIGN, SOUTH
DESIGN BRANCH S14

FUNCTIONAL SUPERVISOR: NESAR FORMOLI
CALCULATED-DESIGNED BY: L. MORALES
CHECKED BY: N. FORMOLI
REVISED BY
DATE REVISED

05:47 20-OCT-2009 trmikesl R:\PSE\01-476401\147640ia001.dgn

LAST REVISION 00-00-00
DATE PLOTTED => 20-OCT-2009
TIME PLOTTED => 05:47

BORDER LAST REVISED 4/11/2008
RELATIVE BORDER SCALE IS IN INCHES 0 1 2 3
USERNAME => trmikesl
DGN FILE => 147640ia001.dgn
CU 03264
EA 476401

Dist	COUNTY	ROUTE	POST MILES TOTAL PROJECT	SHEET No.	TOTAL SHEETS
01	Men	162	20.0/21.2	8	39

Leobardo Morales 7-22-09
REGISTERED CIVIL ENGINEER DATE

10-12-09
PLANS APPROVAL DATE

REGISTERED PROFESSIONAL ENGINEER
LEOBARDO MORALES
No. 72023
Exp. 6-30-10
CIVIL
STATE OF CALIFORNIA

THE STATE OF CALIFORNIA OR ITS OFFICERS OR AGENTS SHALL NOT BE RESPONSIBLE FOR THE ACCURACY OR COMPLETENESS OF SCANNED COPIES OF THIS PLAN SHEET.

NOTE:

FOR ACCURATE RIGHT OF WAY AND ACCESS DATA, CONTACT RIGHT OF WAY ENGINEERING AT THE DISTRICT OFFICE.

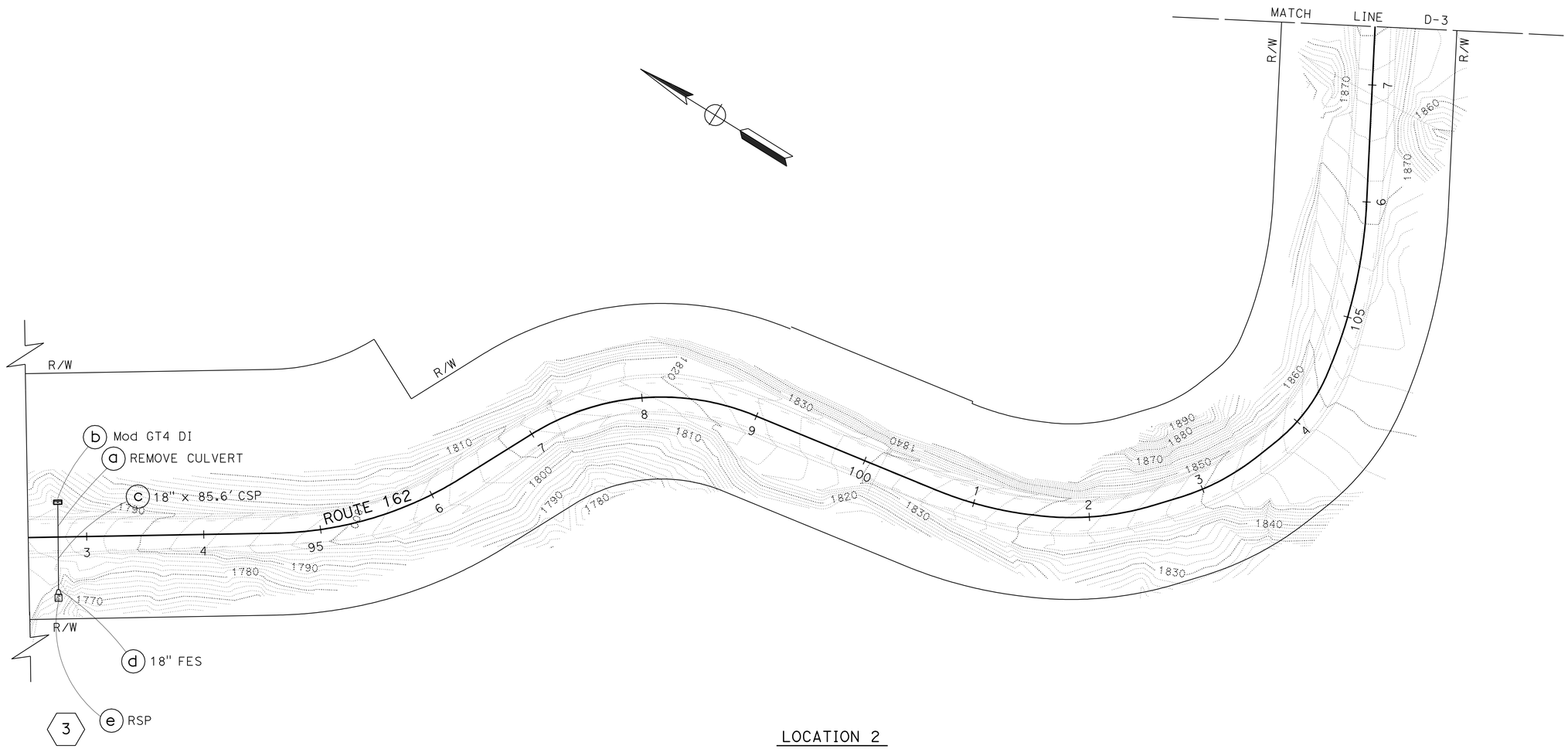

LOCATION 2
PM 20.70

THIS PLAN ACCURATE FOR DRAINAGE WORK ONLY.

DRAINAGE PLAN

SCALE: 1"=50'

D-2

REVISED BY	L. MORALES
DATE REVISED	
CALCULATED-DESIGNED BY	N. FORMOLI
CHECKED BY	
FUNCTIONAL SUPERVISOR	NESAR FORMOLI

STATE OF CALIFORNIA - DEPARTMENT OF TRANSPORTATION
Caltrans
NORTH REGION
OFFICE OF DESIGN, SOUTH
DESIGN BRANCH S14

05:48 20-OCT-2009 trmikesl R:\PSE\01-476401\476401a002.dgn

LAST REVISION 00-00-00 | DATE PLOTTED => 20-OCT-2009 | TIME PLOTTED => 05:48

Dist	COUNTY	ROUTE	POST MILES TOTAL PROJECT	SHEET No.	TOTAL SHEETS
01	Men	162	20.0/21.2	9	39

Leobardo Morales 7-22-09
REGISTERED CIVIL ENGINEER DATE

10-12-09
PLANS APPROVAL DATE

REGISTERED PROFESSIONAL ENGINEER
LEOBARDO MORALES
No. 72023
Exp. 6-30-10
CIVIL
STATE OF CALIFORNIA

THE STATE OF CALIFORNIA OR ITS OFFICERS OR AGENTS SHALL NOT BE RESPONSIBLE FOR THE ACCURACY OR COMPLETENESS OF SCANNED COPIES OF THIS PLAN SHEET.

NOTE:

FOR ACCURATE RIGHT OF WAY AND ACCESS DATA, CONTACT RIGHT OF WAY ENGINEERING AT THE DISTRICT OFFICE.

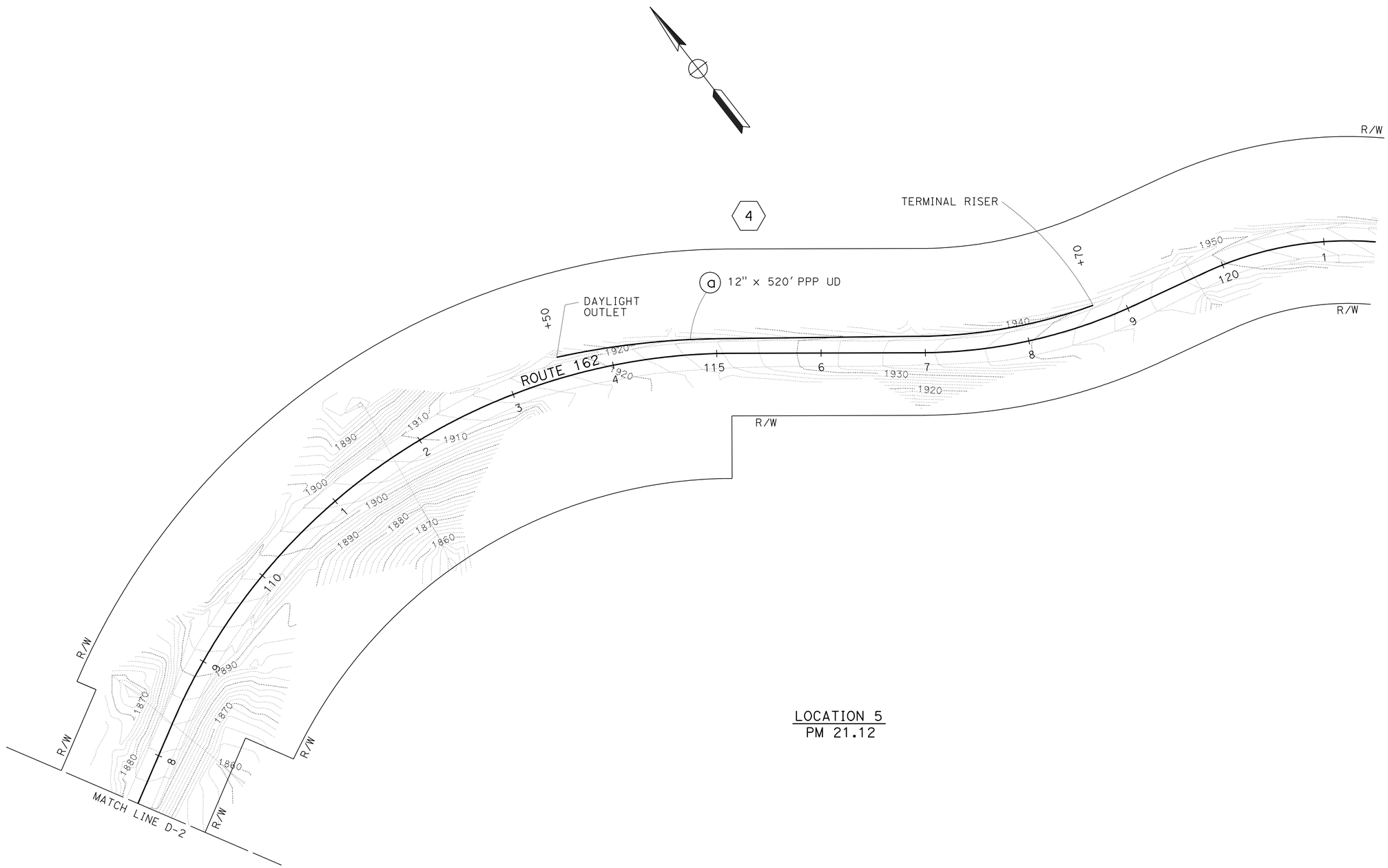

LOCATION 5
PM 21.12

THIS PLAN ACCURATE FOR DRAINAGE WORK ONLY.

DRAINAGE PLAN

SCALE: 1"=50'

D-3

STATE OF CALIFORNIA - DEPARTMENT OF TRANSPORTATION
Caltrans
NORTH REGION
OFFICE OF DESIGN, SOUTH
DESIGN BRANCH S14

FUNCTIONAL SUPERVISOR: NESAR FORMOLI
CALCULATED-DESIGNED BY: L. MORALES
CHECKED BY: N. FORMOLI
REVISED BY
DATE REVISED

05:48 20-OCT-2009 trmikesl R:\PSE\01-476401\1476401a003.dgn

LAST REVISION 00-00-00
DATE PLOTTED => 20-OCT-2009
TIME PLOTTED => 05:48

Dist	COUNTY	ROUTE	POST MILES TOTAL PROJECT	SHEET No.	TOTAL SHEETS
01	Men	162	20.0/21.2	10	39

Leobardo Morales 1-22-09
REGISTERED CIVIL ENGINEER DATE

10-12-09
PLANS APPROVAL DATE

REGISTERED PROFESSIONAL ENGINEER
LEOBARDO MORALES
No. 72023
Exp. 6-30-10
CIVIL
STATE OF CALIFORNIA

THE STATE OF CALIFORNIA OR ITS OFFICERS OR AGENTS SHALL NOT BE RESPONSIBLE FOR THE ACCURACY OR COMPLETENESS OF SCANNED COPIES OF THIS PLAN SHEET.

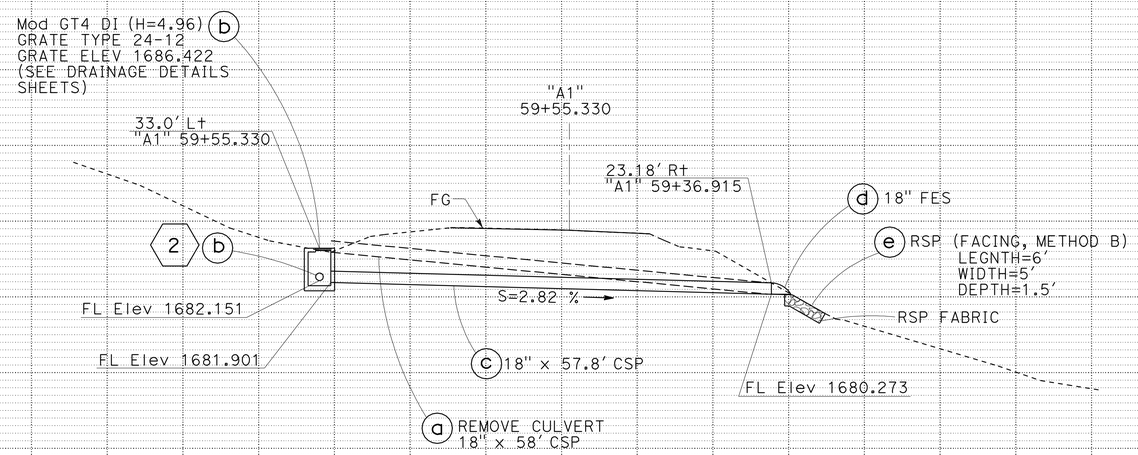

DRAINAGE SYSTEM No. 1

PIPE IS SKEWED 18°55'0.96" Rt
FROM "A1" 59+45.409

DRAINAGE PROFILES

SCALE: Horiz 1"=10'
Vert 1"=10'

DP-1

REVISED BY | DATE REVISED
L. MORALES | N. FORMOLI
CALCULATED-DESIGNED BY | CHECKED BY
FUNCTIONAL SUPERVISOR
NESAR FORMOLI

STATE OF CALIFORNIA - DEPARTMENT OF TRANSPORTATION
Caltrans
NORTH REGION
OFFICE OF DESIGN, SOUTH
DESIGN BRANCH S14

05:48 20-OCT-2009 trmikesl R:\PSE\01-476401\147640ib001.dgn

LAST REVISION | DATE PLOTTED => 20-OCT-2009
00-00-00 | TIME PLOTTED => 05:48

Dist	COUNTY	ROUTE	POST MILES TOTAL PROJECT	SHEET No.	TOTAL SHEETS
01	Men	162	20.0/21.2	11	39

Leobardo Morales 1-22-09
REGISTERED CIVIL ENGINEER DATE

10-12-09
PLANS APPROVAL DATE

REGISTERED PROFESSIONAL ENGINEER
LEOBARDO MORALES
No. 72023
Exp. 6-30-10
CIVIL
STATE OF CALIFORNIA

THE STATE OF CALIFORNIA OR ITS OFFICERS OR AGENTS SHALL NOT BE RESPONSIBLE FOR THE ACCURACY OR COMPLETENESS OF SCANNED COPIES OF THIS PLAN SHEET.

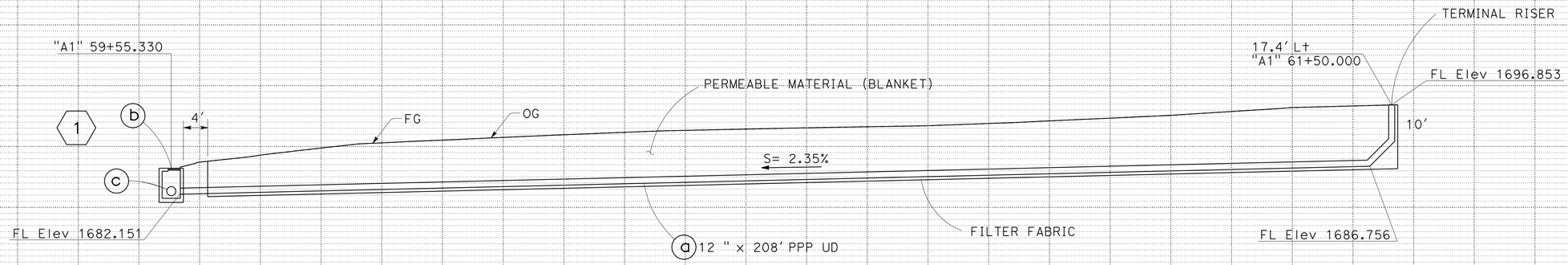

DRAINAGE SYSTEM No. 2

"A1" 59+55.330 TO "A1" 61+50.000
FOR DETAILS NOT SHOWN SEE Std PLANS D102

DRAINAGE PROFILES

SCALE: Horiz 1"=10'
Vert 1"=10'

DP-2

REVISED BY | DATE REVISED
L. MORALES | N. FORMOLI
CALCULATED-DESIGNED BY | CHECKED BY
FUNCTIONAL SUPERVISOR
NESAR FORMOLI

STATE OF CALIFORNIA - DEPARTMENT OF TRANSPORTATION
Caltrans
NORTH REGION
OFFICE OF DESIGN, SOUTH
DESIGN BRANCH S14

05:48 20-OCT-2009 trmikesl R:\PSE\01-476401\147640ib002.dgn

LAST REVISION DATE PLOTTED => 20-OCT-2009
00-00-00 TIME PLOTTED => 05:48

Dist	COUNTY	ROUTE	POST MILES TOTAL PROJECT	SHEET No.	TOTAL SHEETS
01	Men	162	20.0/21.2	12	39

Leobardo Morales 1-22-09
REGISTERED CIVIL ENGINEER DATE

10-12-09
PLANS APPROVAL DATE

REGISTERED PROFESSIONAL ENGINEER
LEOBARDO MORALES
No. 72023
Exp. 6-30-10
CIVIL
STATE OF CALIFORNIA

THE STATE OF CALIFORNIA OR ITS OFFICERS OR AGENTS SHALL NOT BE RESPONSIBLE FOR THE ACCURACY OR COMPLETENESS OF SCANNED COPIES OF THIS PLAN SHEET.

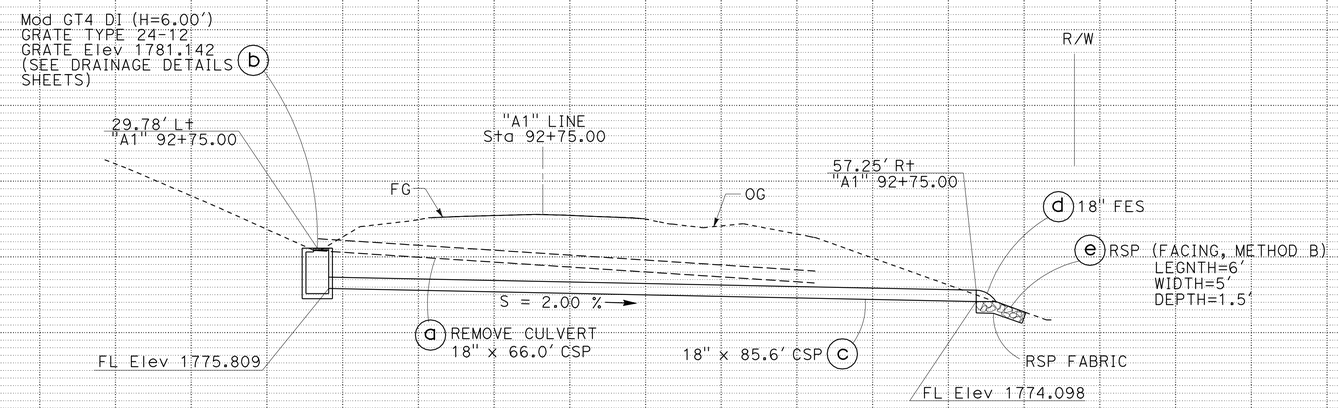

DRAINAGE SYSTEM No. 3

DRAINAGE PROFILES

SCALE: Horiz 1"=10'
Vert 1"=10'

DP-3

REVISED BY | DATE REVISED
L. MORALES | N. FORMOLI
CALCULATED-DESIGNED BY | CHECKED BY
FUNCTIONAL SUPERVISOR
NESAR FORMOLI

STATE OF CALIFORNIA - DEPARTMENT OF TRANSPORTATION
Caltrans
NORTH REGION
OFFICE OF DESIGN, SOUTH
DESIGN BRANCH S14

05:48 20-OCT-2009 trmikesl R:\PSE\01-476401\1476401b003.dgn

LAST REVISION | DATE PLOTTED => 20-OCT-2009
00-00-00 | TIME PLOTTED => 05:48

Dist	COUNTY	ROUTE	POST MILES TOTAL PROJECT	SHEET No.	TOTAL SHEETS
01	Men	162	20.0/21.2	13	39

Leobardo Morales 7-22-09
REGISTERED CIVIL ENGINEER DATE

10-12-09
PLANS APPROVAL DATE

REGISTERED PROFESSIONAL ENGINEER
LEOBARDO MORALES
No. 72023
Exp. 6-30-10
CIVIL
STATE OF CALIFORNIA

THE STATE OF CALIFORNIA OR ITS OFFICERS OR AGENTS SHALL NOT BE RESPONSIBLE FOR THE ACCURACY OR COMPLETENESS OF SCANNED COPIES OF THIS PLAN SHEET.

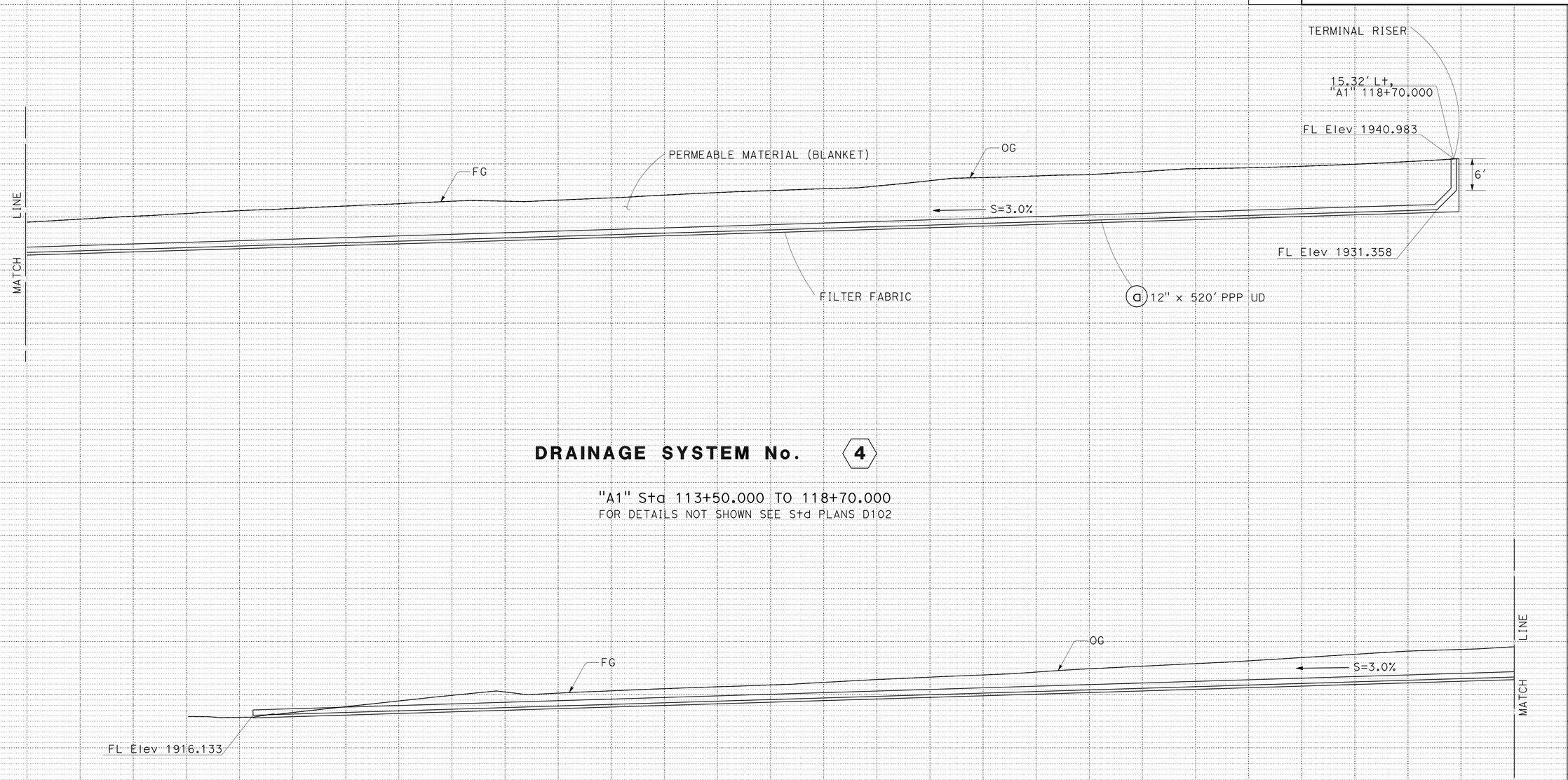

DRAINAGE SYSTEM No. 4

"A1" Sta 113+50.000 TO 118+70.000
FOR DETAILS NOT SHOWN SEE Std PLANS D102

DRAINAGE PROFILES

SCALE: Horiz 1"=10'
Vert 1"=10'

DP-4

REVISED BY | DATE REVISED
L. MORALES | N. FORMOLI
CALCULATED-DESIGNED BY | CHECKED BY
FUNCTIONAL SUPERVISOR: NESAR FORMOLI

STATE OF CALIFORNIA - DEPARTMENT OF TRANSPORTATION
Caltrans
NORTH REGION
OFFICE OF DESIGN, SOUTH
DESIGN BRANCH S14

06:05 20-OCT-2009 trmikesl R:\PSE\01-476401\147640ib004.dgn

LAST REVISION 00-00-00 | DATE PLOTTED => 20-OCT-2009 | TIME PLOTTED => 06:05

BORDER LAST REVISED 4/11/2008 | RELATIVE BORDER SCALE IS IN INCHES 0 1 2 3 | USERNAME => trmikesl | DGN FILE => 147640ib004.dgn | CU 03264 | EA 476401

Dist	COUNTY	ROUTE	POST MILES TOTAL PROJECT	SHEET No.	TOTAL SHEETS
01	Men	162	20.0/21.2	14	39

Leobardo Morales 7-22-09
REGISTERED CIVIL ENGINEER DATE

10-12-09
PLANS APPROVAL DATE

REGISTERED PROFESSIONAL ENGINEER
LEOBARDO MORALES
No. 72023
Exp. 6-30-10
CIVIL
STATE OF CALIFORNIA

THE STATE OF CALIFORNIA OR ITS OFFICERS OR AGENTS SHALL NOT BE RESPONSIBLE FOR THE ACCURACY OR COMPLETENESS OF SCANNED COPIES OF THIS PLAN SHEET.

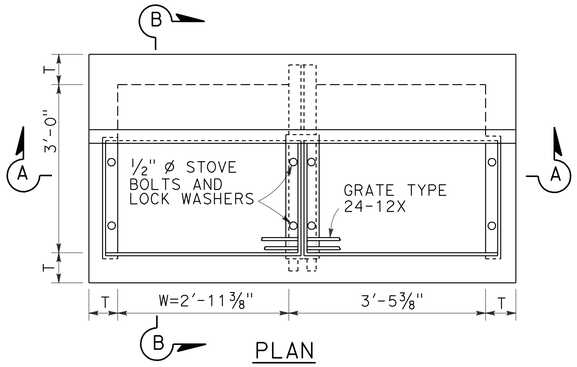

PLAN

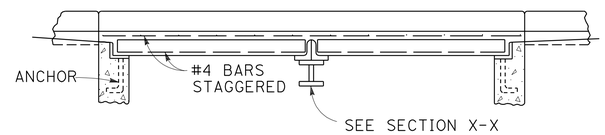

SECTION A-A

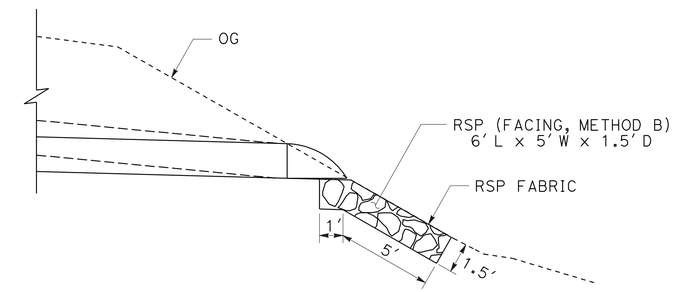

SECTION C-C

TYPE Mod GT4

(FOR DETAILS NOT SHOWN SEE Std PLANS D74A AND D77B)

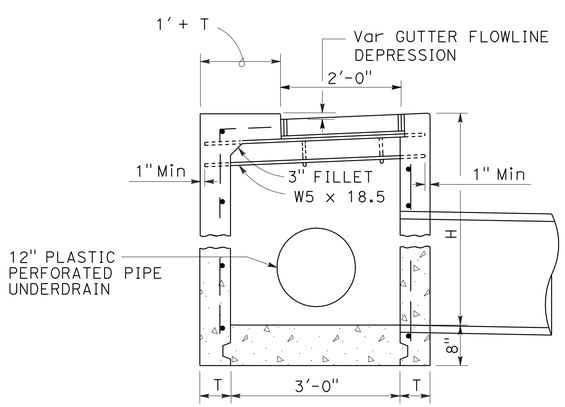

SECTION B-B

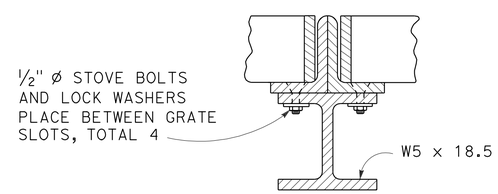

SECTION X-X

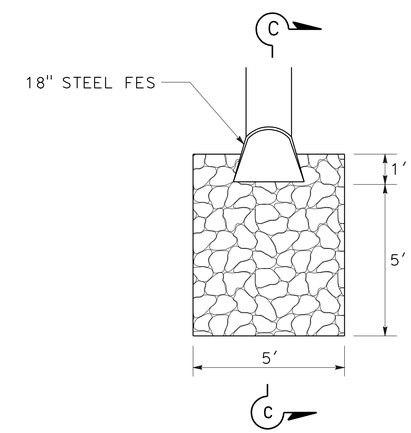

PLAN

RSP DETAIL

DRAINAGE SYSTEM No.

1 — b 3 — b

DRAINAGE DETAILS

NO SCALE

DD-1

STATE OF CALIFORNIA - DEPARTMENT OF TRANSPORTATION
Caltrans
NORTH REGION
OFFICE OF DESIGN, SOUTH
DESIGN BRANCH S14

FUNCTIONAL SUPERVISOR: NESAR FORMOLI
CALCULATED-DESIGNED BY: L. MORALES
CHECKED BY: N. FORMOLI
REVISED BY
DATE REVISED

05:48 20-OCT-2009 trmikesl R:\PSE\01-476401\147640ic001.dgn

LAST REVISION 00-00-00
DATE PLOTTED => 20-OCT-2009
TIME PLOTTED => 05:48

Dist	COUNTY	ROUTE	POST MILES TOTAL PROJECT	SHEET No.	TOTAL SHEETS
01	Men	162	20.0/21.2	15	39

Leobardo Morales 7-22-09
REGISTERED CIVIL ENGINEER DATE

10-12-09
PLANS APPROVAL DATE

REGISTERED PROFESSIONAL ENGINEER
LEOBARDO MORALES
No. 72023
Exp. 6-30-10
CIVIL
STATE OF CALIFORNIA

THE STATE OF CALIFORNIA OR ITS OFFICERS OR AGENTS SHALL NOT BE RESPONSIBLE FOR THE ACCURACY OR COMPLETENESS OF SCANNED COPIES OF THIS PLAN SHEET.

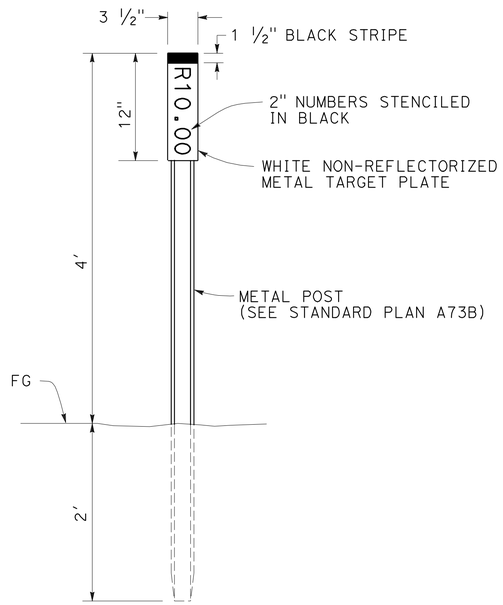

MARKER (CULVERT)

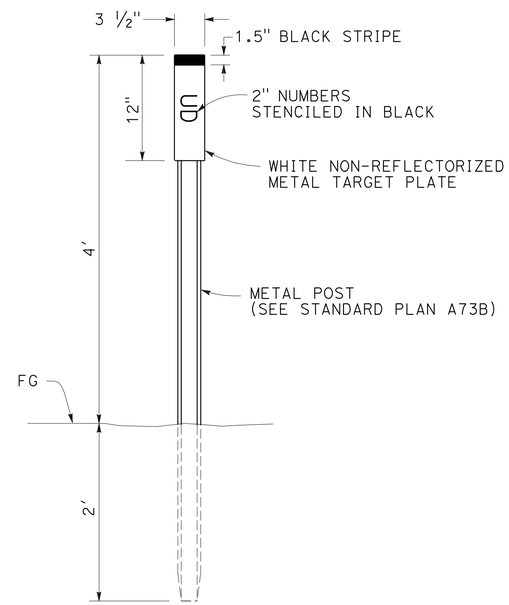

UNDERDRAIN MARKER

MARKER NOTES:

1. NUMBERS AND TEXT AS DESIGNATED ON PLAN SHEET DQ-1.
2. CONTRACTOR SHALL FIELD VERIFY POSTMILE WITH ENGINEER'S APPROVAL PRIOR TO ORDERING AND PLACING METAL TARGET PLATES.
3. EXACT LOCATIONS TO BE DETERMINED BY THE ENGINEER.

DRAINAGE DETAILS

NO SCALE

DD-2

REVISED BY	L. MORALES
DATE REVISED	
CALCULATED-DESIGNED BY	N. FORMOLI
CHECKED BY	
FUNCTIONAL SUPERVISOR	NESAR FORMOLI

STATE OF CALIFORNIA - DEPARTMENT OF TRANSPORTATION
Caltrans
NORTH REGION
OFFICE OF DESIGN, SOUTH
DESIGN BRANCH S14

05:49 20-OCT-2009 trmikesl R:\PSE\01-476401\147640ic002.dgn

LAST REVISION 00-00-00 | DATE PLOTTED => 20-OCT-2009 | TIME PLOTTED => 05:49

Dist	COUNTY	ROUTE	POST MILES TOTAL PROJECT	SHEET No.	TOTAL SHEETS
01	Men	162	20.0/21.2	16	39

Leobardo Morales 7-22-09
REGISTERED CIVIL ENGINEER DATE

10-12-09
PLANS APPROVAL DATE

REGISTERED PROFESSIONAL ENGINEER
LEOBARDO MORALES
No. 72023
Exp. 6-30-10
CIVIL
STATE OF CALIFORNIA

THE STATE OF CALIFORNIA OR ITS OFFICERS OR AGENTS SHALL NOT BE RESPONSIBLE FOR THE ACCURACY OR COMPLETENESS OF SCANNED COPIES OF THIS PLAN SHEET.

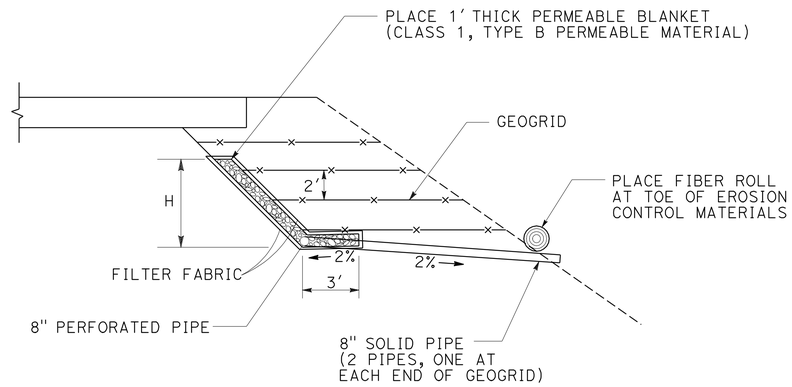

GR DETAIL

LOCATION	STATION	H	(N) PERMEABLE MATERIAL (BLANKET)	(N) FILTER FABRIC	8" PERFORATED PLASTIC PIPE UNDERDRAIN	8" PLASTIC PIPE
		LF	CY	SQYD	LF	LF
2	"A1" 93+23.00 TO 94+50.00	7.3	48	340	130	50
3	"A1" 97+40.00 TO 98+28.00	11.0	47	300	90	50
4	"A1" 102+34.00 TO 103+10.00	7.3	31	213	80	50

NOTE: FOR TOTAL QUANTITIES, SEE DRAINAGE QUANTITIES SHEET
(N) NOT A SEPARATE PAY ITEM, FOR INFORMATION ONLY.

DRAINAGE DETAILS
NO SCALE

DD-3

REVISED BY | DATE REVISED
CALCULATED-DESIGNED BY: L. MORALES
CHECKED BY: N. FORMOLI
FUNCTIONAL SUPERVISOR: NESAR FORMOLI

STATE OF CALIFORNIA - DEPARTMENT OF TRANSPORTATION
Caltrans
NORTH REGION
OFFICE OF DESIGN, SOUTH
DESIGN BRANCH S14

05:49 20-OCT-2009 trmikesl R:\PSE\01-476401\476401c003.dgn

LAST REVISION 00-00-00 | DATE PLOTTED => 20-OCT-2009 | TIME PLOTTED => 05:49

Dist	COUNTY	ROUTE	POST MILES TOTAL PROJECT	SHEET No.	TOTAL SHEETS
01	Men	162	20.0/21.2	17	39

Leobardo Morales 7-22-09
REGISTERED CIVIL ENGINEER DATE

10-12-09
PLANS APPROVAL DATE

REGISTERED PROFESSIONAL ENGINEER
LEOBARDO MORALES
No. 72023
Exp. 6-30-10
CIVIL
STATE OF CALIFORNIA

THE STATE OF CALIFORNIA OR ITS OFFICERS OR AGENTS SHALL NOT BE RESPONSIBLE FOR THE ACCURACY OR COMPLETENESS OF SCANNED COPIES OF THIS PLAN SHEET.

DRAINAGE QUANTITIES

DRAINAGE SYSTEM No.	DRAINAGE UNIT	REMOVE CULVERT	ROCK SLOPE PROTECTION FABRIC	FILTER FABRIC (N)	PERMEABLE MATERIAL (BLANKET) (N)	12" UNDERDRAIN TERMINAL RISER (N)	12" PERFORATED PLASTIC PIPE UNDERDRAIN	18" CORRUGATED STEEL PIPE (0.138" THICK)	18" STEEL FLARED END SECTION	ROCK SLOPE PROTECTION (FACING, METHOD B)	MARKER (CULVERT)	UNDERDRAIN MARKER	8" PERFORATED PLASTIC PIPE UNDERDRAIN	8" PLASTIC PIPE	MISCELLANEOUS IRON AND STEEL	MINOR CONCRETE (MINOR STRUCTURE)	HEIGHT OF INLET (N)	DESCRIPTION	STATION	DRAINAGE SYSTEM No.	DRAINAGE UNIT
		LF	SQYD	SQYD	CY	EA	LF	LF	EA	CY	EA	EA	LF	LF	LB	CY	FT				
1	a	58																REMOVE CULVERT	"A1" 59+55.330	1	a
	b														478	3.0	4.96	Mod GT4 DI			b
	c							57.8			1							18" x 58' CSP			c
	d								1									18" FES			d
1	e		8							1.7								RSP (FACING, METHOD B), 6' L x 5' W x 1.5' D		1	e
2	a			460	116	1	208					1						12" PERFORATED PLASTIC PIPE UNDERDRAIN	"A1" 59+58.000	2	a
3	a	66																REMOVE CULVERT	"A1" 92+75.000	3	a
	b														478	3.4	6.00	Mod GT4 DI			b
	c							85.6										18" x 85.6' CSP			c
	d								1									18" FES			d
3	e		8							1.7	1							RSP (FACING, METHOD B), 6' L x 5' W x 1.5' D			e
4	a			830	193	1	520					1						12" PERFORATED PLASTIC PIPE UNDERDRAIN	"A1" 113+50.000	4	a
				340	48								130	50				8" PERFORATED PLASTIC PIPE UNDERDRAIN	LOCATION 2 "A1" 93+23.000		
				300	47								90	50				8" PERFORATED PLASTIC PIPE UNDERDRAIN	LOCATION 3 "A1" 97+40.000		
				213	31								80	50				8" PERFORATED PLASTIC PIPEUNDERDRAIN	LOCATION 4 "A1" 102+34.000		
		124	16	2143	435	2	728	143.4	2	3.4	2	2	300	150	956	6.4		TOTAL			

(N) NOT A SEPARATE PAY ITEM, FOR INFORMATION ONLY.

DRAINAGE QUANTITIES

DQ-1

CALCULATED-DESIGNED BY L. MORALES
CHECKED BY N. FORMOLI
REVISED BY
DATE REVISED
FUNCTIONAL SUPERVISOR NESAR FORMOLI

STATE OF CALIFORNIA - DEPARTMENT OF TRANSPORTATION
Caltrans
NORTH REGION
OFFICE OF DESIGN, SOUTH
DESIGN BRANCH S14

05:49 20-OCT-2009 trmikesl R:\PSE\01-476401\1476401d001.dgn

LAST REVISION 00-00-00
DATE PLOTTED => 20-OCT-2009
TIME PLOTTED => 05:49

Dist	COUNTY	ROUTE	POST MILES TOTAL PROJECT	SHEET No.	TOTAL SHEETS
01	Men	162	20.0/21.2	18	39

Leobardo Morales 7-22-09
REGISTERED CIVIL ENGINEER DATE

10-12-09
PLANS APPROVAL DATE

REGISTERED PROFESSIONAL ENGINEER
LEOBARDO MORALES
No. 72023
Exp. 6-30-10
CIVIL
STATE OF CALIFORNIA

THE STATE OF CALIFORNIA OR ITS OFFICERS OR AGENTS SHALL NOT BE RESPONSIBLE FOR THE ACCURACY OR COMPLETENESS OF SCANNED COPIES OF THIS PLAN SHEET.

STATIONARY MOUNTED CONSTRUCTION AREA SIGNS

SIGN No.	SIGN CODE CAMUTCD	PANEL SIZE	SIGN MESSAGE	No. OF POST AND SIZE	No. OF SIGNS
A	W20-1	36" x 36"	ROAD WORK AHEAD	(1) 4" x 4"	2
B	G20-2	36" x 18"	END ROAD WORK	(1) 4" x 4"	2
C	C40(CA)	108" x 42"	TRAFFIC FINES DOUBLED IN CONSTRUCTION ZONES	(2) 6" x 6"	2
D	W16-1	36" x 24"	SHARE THE ROAD	(1) 4" x 4"	2
	W11-1		WATCH FOR BICYCLES		

EXACT SIGN LOCATIONS TO BE FIELD DETERMINED AND APPROVED BY THE ENGINEER.

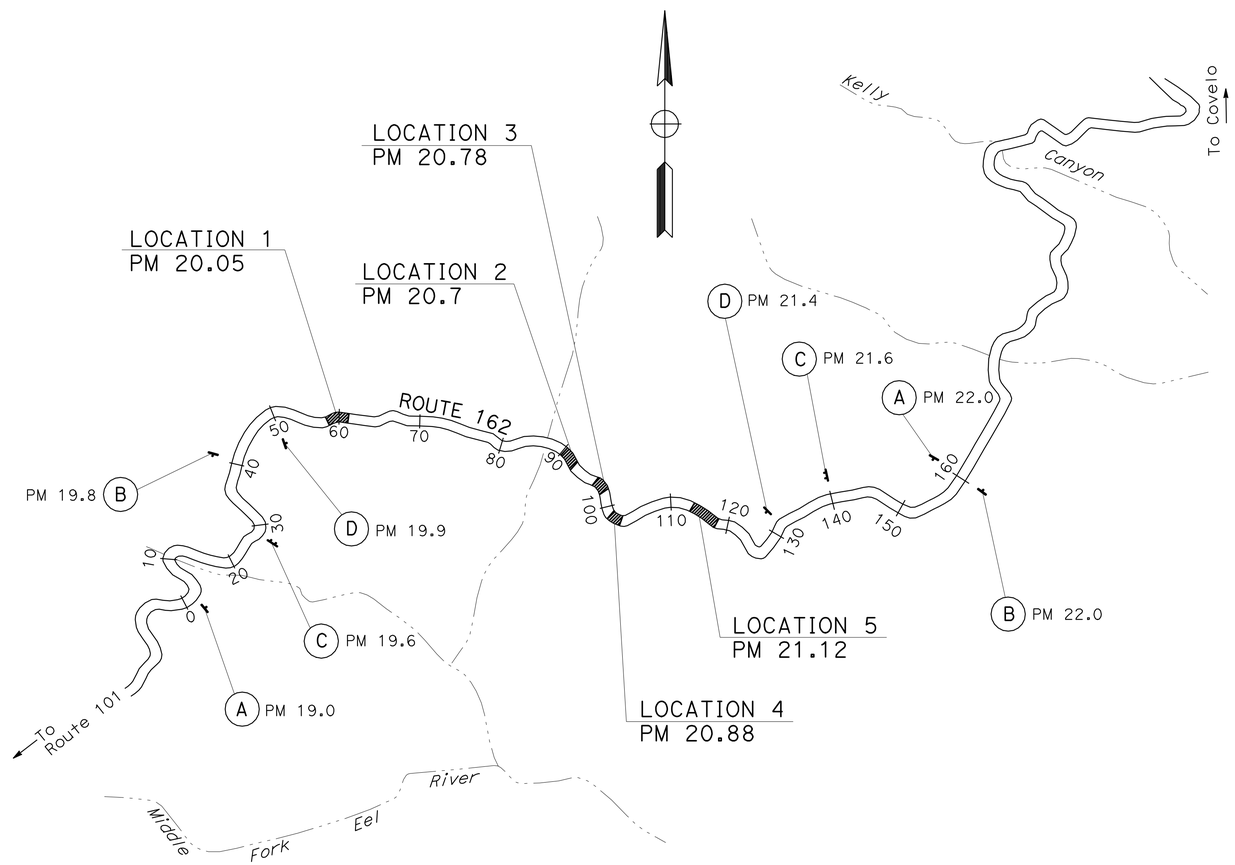

THIS PLAN ACCURATE FOR CONSTRUCTION AREA SIGN WORK ONLY.

CONSTRUCTION AREA SIGNS

NO SCALE

CS-1

REVISED BY	DATE REVISED

CALCULATED-DESIGNED BY: L. MORALES
CHECKED BY: N. FORMOLI
FUNCTIONAL SUPERVISOR: NESAR FORMOLI

STATE OF CALIFORNIA - DEPARTMENT OF TRANSPORTATION
Caltrans
NORTH REGION
OFFICE OF DESIGN, SOUTH
DESIGN BRANCH S14

05:49 20-OCT-2009 trmikesl R:\PSE\01-476401\1476401a001.dgn

LAST REVISION 00-00-00 | DATE PLOTTED => 20-OCT-2009 | TIME PLOTTED => 05:49

Dist	COUNTY	ROUTE	POST MILES TOTAL PROJECT	SHEET No.	TOTAL SHEETS
01	Men	162	20.0/21.2	19	39

Leobardo Morales 7-22-09
REGISTERED CIVIL ENGINEER DATE

10-12-09
PLANS APPROVAL DATE

REGISTERED PROFESSIONAL ENGINEER
LEOBARDO MORALES
No. 72023
Exp. 6-30-10
CIVIL
STATE OF CALIFORNIA

THE STATE OF CALIFORNIA OR ITS OFFICERS OR AGENTS SHALL NOT BE RESPONSIBLE FOR THE ACCURACY OR COMPLETENESS OF SCANNED COPIES OF THIS PLAN SHEET.

NOTES:

1. FOR ACCURATE RIGHT OF WAY AND ACCESS DATA, CONTACT RIGHT OF WAY ENGINEERING AT THE DISTRICT OFFICE.
2. CRASH CUSHION (ABSORB 350) SHOULD BE PLACED INLINE WITH TEMPORARY RAILING (TYPE K).

LEGEND

CONSTRUCT IN THIS STAGE

DIRECTION OF TRAFFIC

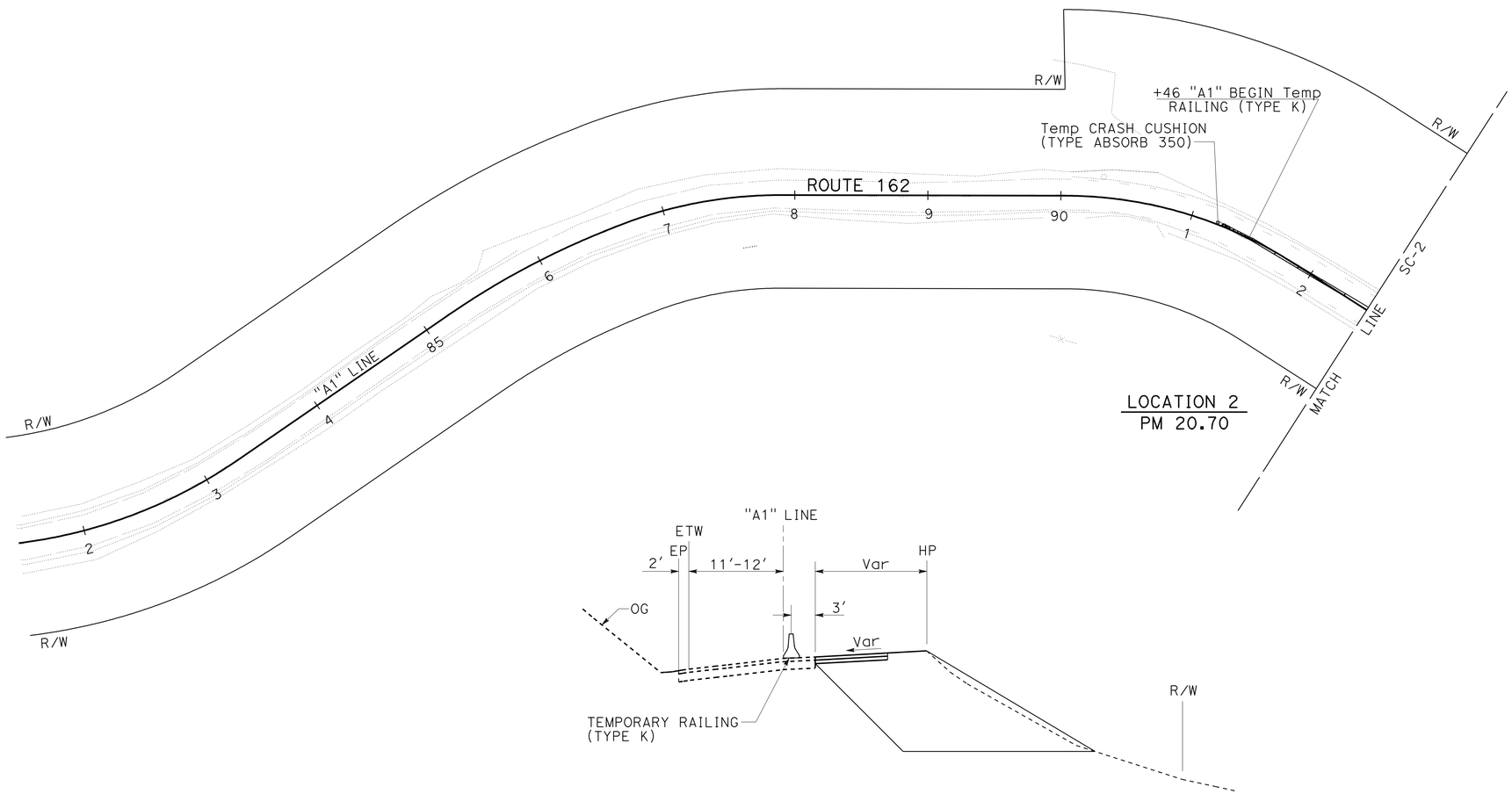

STAGE CONSTRUCTION TYPICAL

LOCATIONS 2, 3, 4

STAGE CONSTRUCTION PLAN

SCALE: 1"=50'

THIS PLAN ACCURATE FOR STAGE CONSTRUCTION WORK ONLY.

SC-1

REVISED BY	DATE REVISED

CALCULATED-DESIGNED BY: L. MORALES
CHECKED BY: N. FORMOLI
FUNCTIONAL SUPERVISOR: NESAR FORMOLI

STATE OF CALIFORNIA - DEPARTMENT OF TRANSPORTATION
Caltrans
NORTH REGION
OFFICE OF DESIGN, SOUTH
DESIGN BRANCH S14

05:49 20-OCT-2009 trmikesl R:\PSE\01-476401\147640ma001.dgn

LAST REVISION 00-00-00 | DATE PLOTTED => 20-OCT-2009 | TIME PLOTTED => 05:49

Dist	COUNTY	ROUTE	POST MILES TOTAL PROJECT	SHEET No.	TOTAL SHEETS
01	Men	162	20.0/21.2	20	39

Leobardo Morales 7-22-09
REGISTERED CIVIL ENGINEER DATE

10-12-09
PLANS APPROVAL DATE

REGISTERED PROFESSIONAL ENGINEER
LEOBARDO MORALES
No. 72023
Exp. 6-30-10
CIVIL
STATE OF CALIFORNIA

THE STATE OF CALIFORNIA OR ITS OFFICERS OR AGENTS SHALL NOT BE RESPONSIBLE FOR THE ACCURACY OR COMPLETENESS OF SCANNED COPIES OF THIS PLAN SHEET.

NOTE:

FOR ACCURATE RIGHT OF WAY AND ACCESS DATA, CONTACT RIGHT OF WAY ENGINEERING AT THE DISTRICT OFFICE.

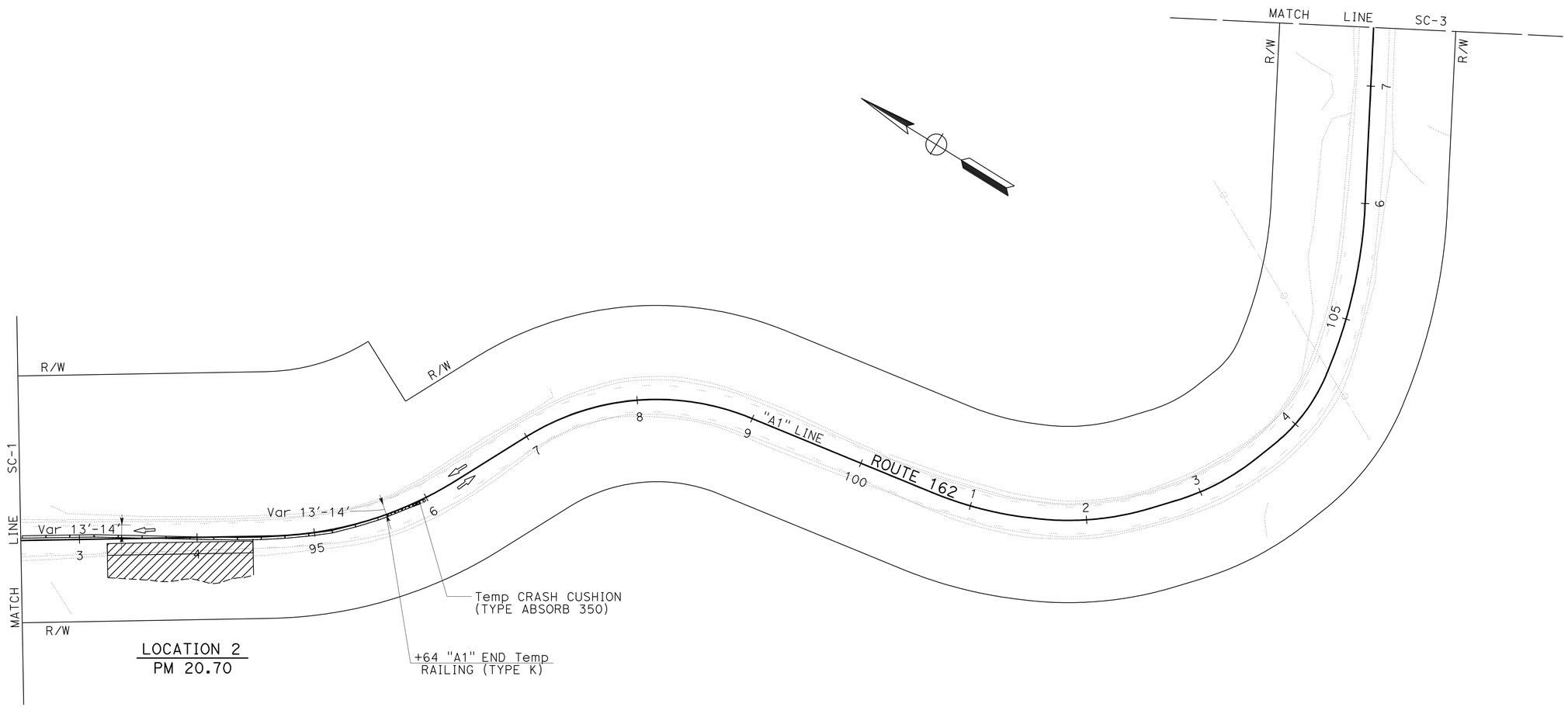

LOCATION 2
PM 20.70

THIS PLAN ACCURATE FOR STAGE CONSTRUCTION WORK ONLY.

STAGE CONSTRUCTION PLAN

SCALE: 1"=50'

SC-2

REVISED BY	DATE REVISED

CALCULATED-DESIGNED BY: L. MORALES
CHECKED BY: N. FORMOLI

FUNCTIONAL SUPERVISOR: NESAR FORMOLI

STATE OF CALIFORNIA - DEPARTMENT OF TRANSPORTATION
Caltrans
NORTH REGION
OFFICE OF DESIGN, SOUTH
DESIGN BRANCH S14

05:49 20-OCT-2009 trmikesl R:\PSE\01-476401\147640ma002.dgn

LAST REVISION 00-00-00 | DATE PLOTTED => 20-OCT-2009 | TIME PLOTTED => 05:49

Dist	COUNTY	ROUTE	POST MILES TOTAL PROJECT	SHEET No.	TOTAL SHEETS
01	Men	162	20.0/21.2	21	39

Leobardo Morales 7-22-09
REGISTERED CIVIL ENGINEER DATE

10-12-09
PLANS APPROVAL DATE

REGISTERED PROFESSIONAL ENGINEER
LEOBARDO MORALES
No. 72023
Exp. 6-30-10
CIVIL
STATE OF CALIFORNIA

THE STATE OF CALIFORNIA OR ITS OFFICERS OR AGENTS SHALL NOT BE RESPONSIBLE FOR THE ACCURACY OR COMPLETENESS OF SCANNED COPIES OF THIS PLAN SHEET.

NOTE:

FOR ACCURATE RIGHT OF WAY AND ACCESS DATA, CONTACT RIGHT OF WAY ENGINEERING AT THE DISTRICT OFFICE.

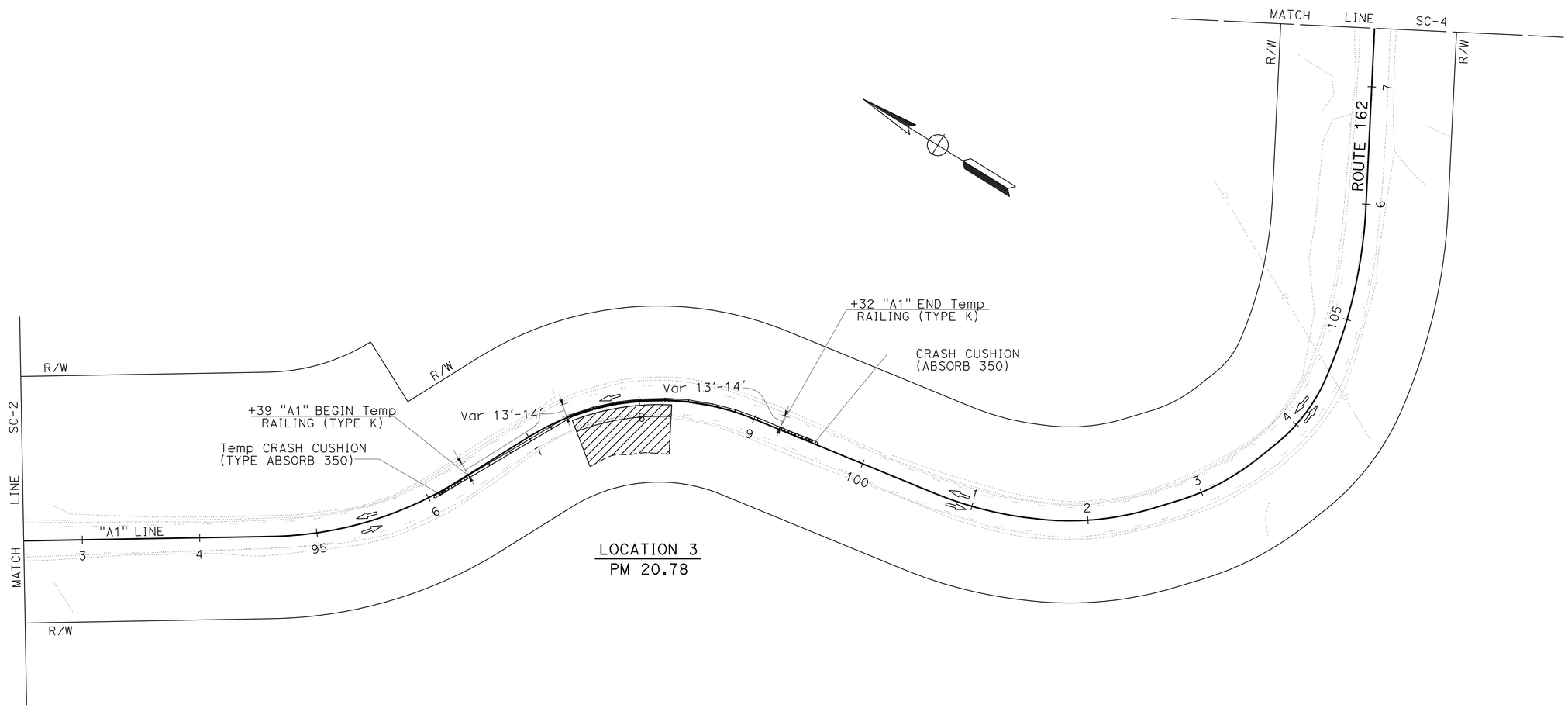

STAGE CONSTRUCTION PLAN

SCALE: 1"=50'

SC-3

THIS PLAN ACCURATE FOR STAGE CONSTRUCTION WORK ONLY.

REVISED BY | DATE REVISED

CALCULATED-DESIGNED BY: L. MORALES
CHECKED BY: N. FORMOLI

FUNCTIONAL SUPERVISOR: NESAR FORMOLI

STATE OF CALIFORNIA - DEPARTMENT OF TRANSPORTATION
Caltrans
NORTH REGION
OFFICE OF DESIGN, SOUTH
DESIGN BRANCH S14

05:50 20-OCT-2009 trmikesl R:\PSE\01-476401\147640ma003.dgn

LAST REVISION 00-00-00 | DATE PLOTTED => 20-OCT-2009 | TIME PLOTTED => 05:50

BORDER LAST REVISED 4/11/2008 | RELATIVE BORDER SCALE IS IN INCHES 0 1 2 3 | USERNAME => trmikesl | DGN FILE => 147640ma003.dgn | CU 03264 | EA 476401

Dist	COUNTY	ROUTE	POST MILES TOTAL PROJECT	SHEET No.	TOTAL SHEETS
01	Men	162	20.0/21.2	22	39

Leobardo Morales 7-22-09
REGISTERED CIVIL ENGINEER DATE

10-12-09
PLANS APPROVAL DATE

REGISTERED PROFESSIONAL ENGINEER
LEOBARDO MORALES
No. 72023
Exp. 6-30-10
CIVIL
STATE OF CALIFORNIA

THE STATE OF CALIFORNIA OR ITS OFFICERS OR AGENTS SHALL NOT BE RESPONSIBLE FOR THE ACCURACY OR COMPLETENESS OF SCANNED COPIES OF THIS PLAN SHEET.

NOTE:

FOR ACCURATE RIGHT OF WAY AND ACCESS DATA, CONTACT RIGHT OF WAY ENGINEERING AT THE DISTRICT OFFICE.

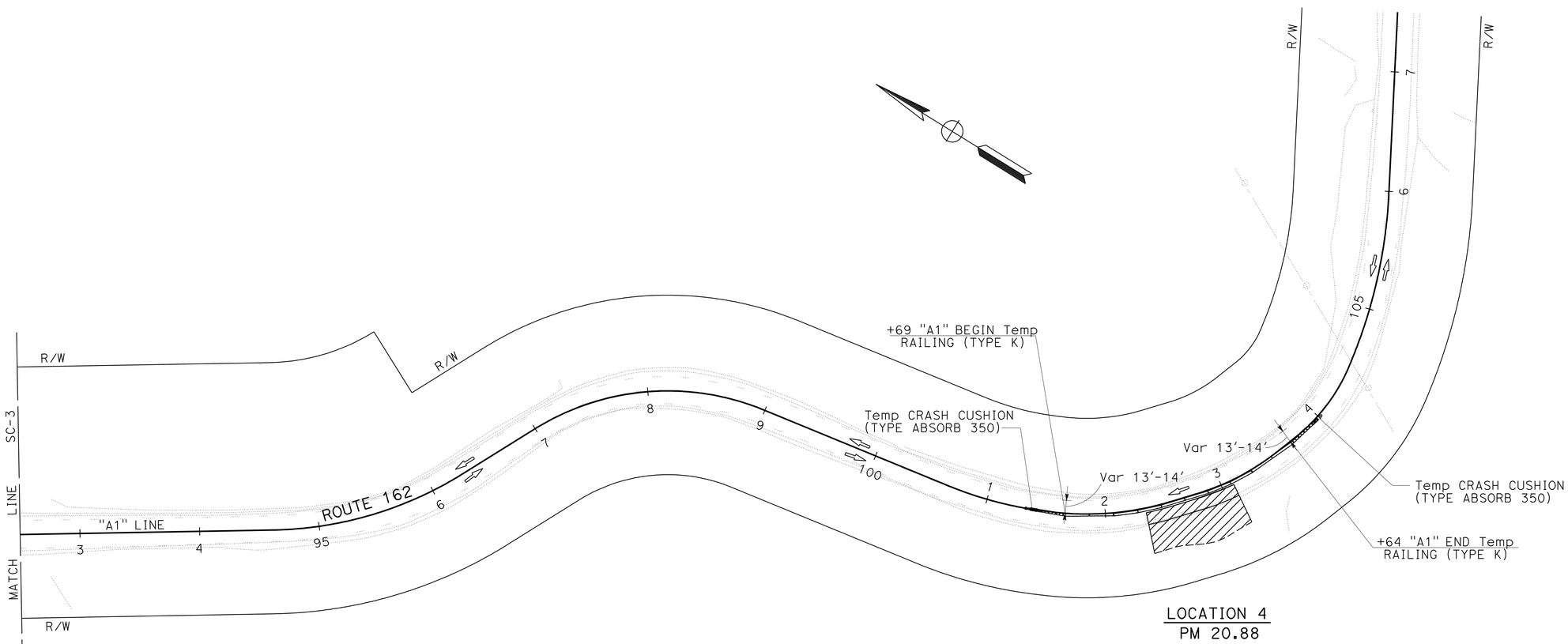

LOCATION 4
PM 20.88

STAGE CONSTRUCTION PLAN

SCALE: 1"=50'

THIS PLAN ACCURATE FOR STAGE CONSTRUCTION WORK ONLY.

SC-4

REVISED BY | DATE REVISED
L. MORALES | N. FORMOLI
CALCULATED-DESIGNED BY | CHECKED BY
FUNCTIONAL SUPERVISOR
NESAR FORMOLI

STATE OF CALIFORNIA - DEPARTMENT OF TRANSPORTATION
Caltrans
NORTH REGION
OFFICE OF DESIGN, SOUTH
DESIGN BRANCH S14

05:50 20-OCT-2009 trmikesl R:\PSE\01-476401\147640ma004.dgn

LAST REVISION 00-00-00 | DATE PLOTTED => 20-OCT-2009 | TIME PLOTTED => 05:50

Dist	COUNTY	ROUTE	POST MILES TOTAL PROJECT	SHEET No.	TOTAL SHEETS
01	Men	162	20.0/21.2	23	39

Leobardo Morales 7-22-09
REGISTERED CIVIL ENGINEER DATE

10-12-09
PLANS APPROVAL DATE

REGISTERED PROFESSIONAL ENGINEER
LEOBARDO MORALES
No. 72023
Exp. 6-30-10
CIVIL
STATE OF CALIFORNIA

THE STATE OF CALIFORNIA OR ITS OFFICERS OR AGENTS SHALL NOT BE RESPONSIBLE FOR THE ACCURACY OR COMPLETENESS OF SCANNED COPIES OF THIS PLAN SHEET.

STAGE CONSTRUCTION QUANTITIES

LOCATION	STATION	TEMPORARY RAILING (TYPE K)	TEMPORARY CRASH CUSHION (TYPE ABSORB 350)
		LF	EA
2	"A1" 91+46 TO "A1" 95+64	418	2
3	"A1" 96+39 TO "A1" 99+32	293	2
4	"A1" 101+69 TO "A1" 103+64	200	2
	TOTAL	911	6

STAGE CONSTRUCTION QUANTITIES

SCQ-1

REVISED BY | DATE REVISED
L. MORALES | N. FORMOLI
CALCULATED-DESIGNED BY | CHECKED BY
FUNCTIONAL SUPERVISOR
NESAR FORMOLI

STATE OF CALIFORNIA - DEPARTMENT OF TRANSPORTATION
Caltrans
NORTH REGION
OFFICE OF DESIGN, SOUTH
DESIGN BRANCH S14

05:50 20-OCT-2009 trmikesl R:\PSE\01-476401\147640mc001.dgn

LAST REVISION 00-00-00 | DATE PLOTTED => 20-OCT-2009 | TIME PLOTTED => 05:50

Dist	COUNTY	ROUTE	POST MILES TOTAL PROJECT	SHEET No.	TOTAL SHEETS
01	Men	162	20.0/21.2	24	39

Leobardo Morales 7-22-09
REGISTERED CIVIL ENGINEER DATE

10-12-09
PLANS APPROVAL DATE

REGISTERED PROFESSIONAL ENGINEER
LEOBARDO MORALES
No. 72023
Exp. 6-30-10
CIVIL
STATE OF CALIFORNIA

THE STATE OF CALIFORNIA OR ITS OFFICERS OR AGENTS SHALL NOT BE RESPONSIBLE FOR THE ACCURACY OR COMPLETENESS OF SCANNED COPIES OF THIS PLAN SHEET.

NOTE:

FOR ACCURATE RIGHT OF WAY AND ACCESS DATA, CONTACT RIGHT OF WAY ENGINEERING AT THE DISTRICT OFFICE.

LEGEND

No. PAVEMENT DELINEATION DETAIL NUMBER
4" THERMOPLASTIC TRAFFIC STRIPE

LIMIT OF STRIPE PATTERN

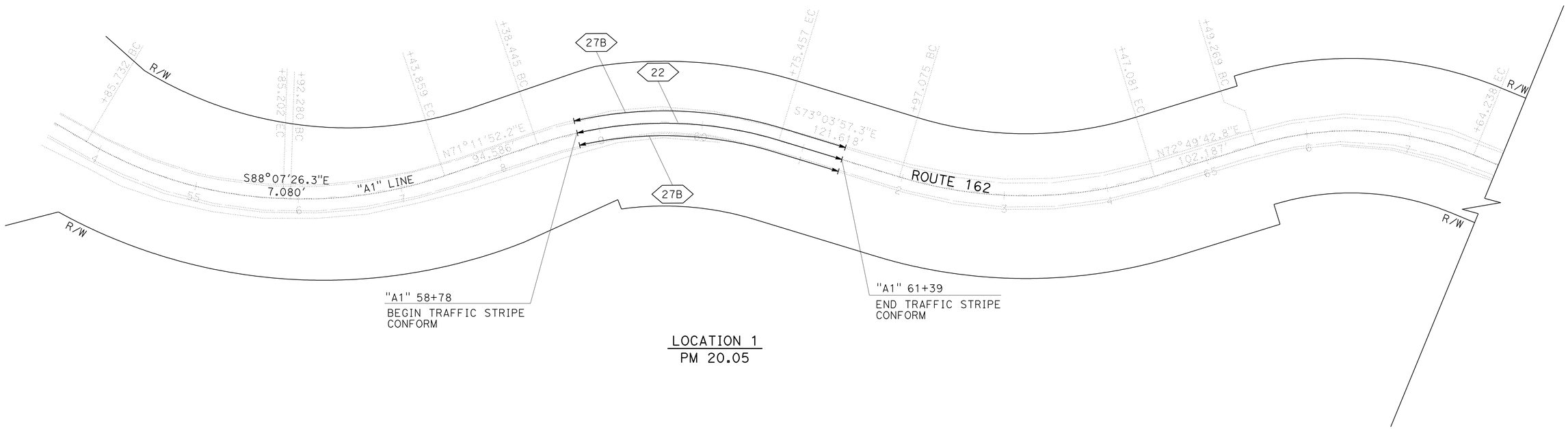

LOCATION 1
PM 20.05

THIS PLAN ACCURATE FOR PAVMENT DELINEATION WORK ONLY

PAVEMENT DELINEATION PLAN

SCALE: 1"=50'

PD-1

REVISED BY	DATE REVISED

CALCULATED-DESIGNED BY: L. MORALES
CHECKED BY: N. FORMOLI
FUNCTIONAL SUPERVISOR: NESAR FORMOLI

STATE OF CALIFORNIA - DEPARTMENT OF TRANSPORTATION
Caltrans
NORTH REGION
OFFICE OF DESIGN, SOUTH
DESIGN BRANCH S14

05:50 20-OCT-2009 trmikesl R:\PSE\01-476401\147640na001.dgn

LAST REVISION 00-00-00
DATE PLOTTED => 20-OCT-2009
TIME PLOTTED => 05:50

Dist	COUNTY	ROUTE	POST MILES TOTAL PROJECT	SHEET No.	TOTAL SHEETS
01	Men	162	20.0/21.2	25	39

Leobardo Morales 7-22-09
REGISTERED CIVIL ENGINEER DATE

10-12-09
PLANS APPROVAL DATE

REGISTERED PROFESSIONAL ENGINEER
LEOBARDO MORALES
No. 72023
Exp. 6-30-10
CIVIL
STATE OF CALIFORNIA

THE STATE OF CALIFORNIA OR ITS OFFICERS OR AGENTS SHALL NOT BE RESPONSIBLE FOR THE ACCURACY OR COMPLETENESS OF SCANNED COPIES OF THIS PLAN SHEET.

NOTE:

FOR ACCURATE RIGHT OF WAY AND ACCESS DATA, CONTACT RIGHT OF WAY ENGINEERING AT THE DISTRICT OFFICE.

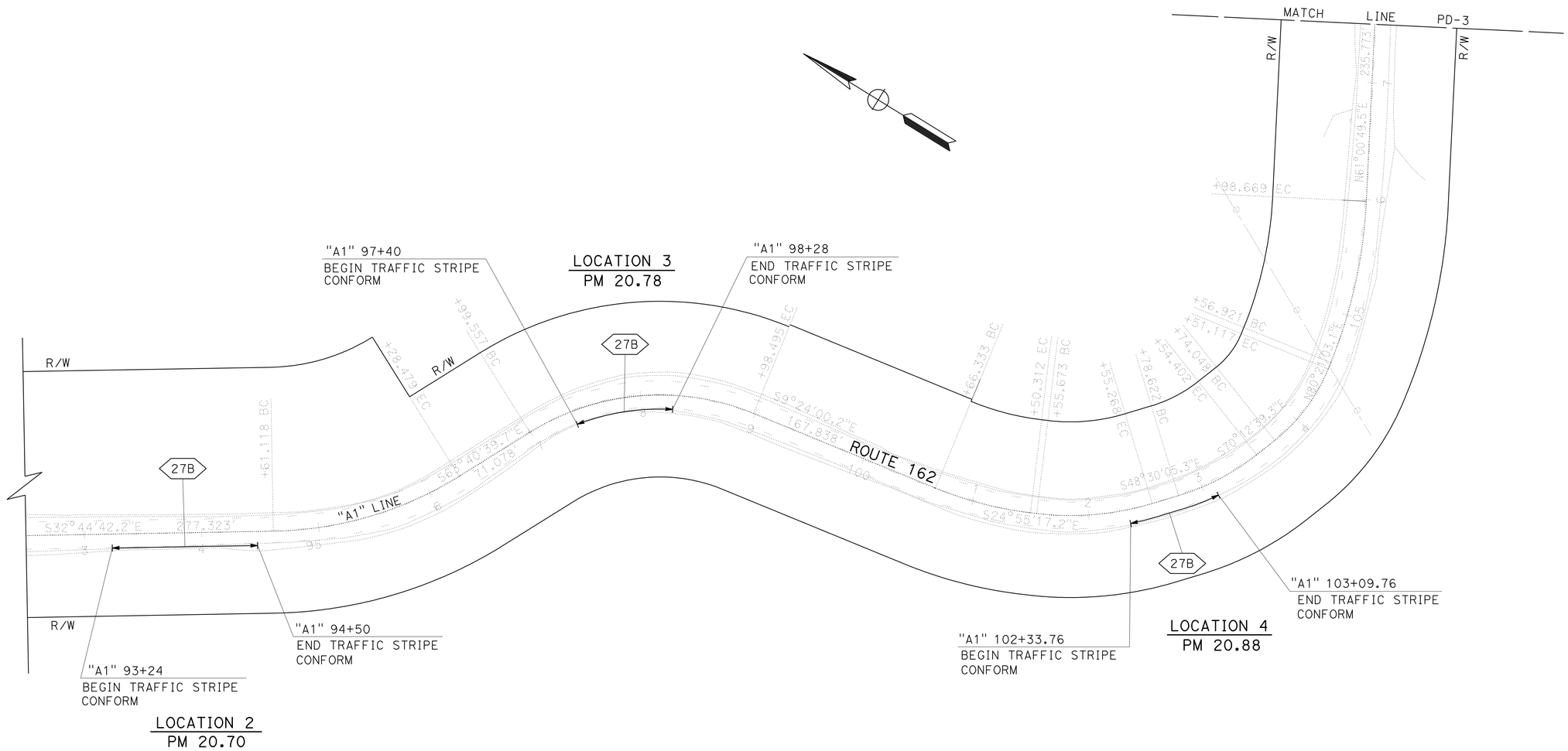

PAVEMENT DELINEATION PLAN

SCALE: 1"=50'

THIS PLAN ACCURATE FOR PAVMENT DELINEATION WORK ONLY

PD-2

STATE OF CALIFORNIA - DEPARTMENT OF TRANSPORTATION
NORTH REGION
OFFICE OF DESIGN, SOUTH
DESIGN BRANCH S14

Caltrans

FUNCTIONAL SUPERVISOR: NESAR FORMOLI
CALCULATED-DESIGNED BY: L. MORALES
CHECKED BY: N. FORMOLI
REVISED BY
DATE REVISED

05:50 20-OCT-2009 trmikesl R:\PSE\01-476401\147640na002.dgn

LAST REVISION 00-00-00
DATE PLOTTED => 20-OCT-2009
TIME PLOTTED => 05:50

Dist	COUNTY	ROUTE	POST MILES TOTAL PROJECT	SHEET No.	TOTAL SHEETS
01	Men	162	20.0/21.2	26	39

Leobardo Morales 7-22-09
REGISTERED CIVIL ENGINEER DATE

10-12-09
PLANS APPROVAL DATE

REGISTERED PROFESSIONAL ENGINEER
LEOBARDO MORALES
No. 72023
Exp. 6-30-10
CIVIL
STATE OF CALIFORNIA

THE STATE OF CALIFORNIA OR ITS OFFICERS OR AGENTS SHALL NOT BE RESPONSIBLE FOR THE ACCURACY OR COMPLETENESS OF SCANNED COPIES OF THIS PLAN SHEET.

NOTE:

FOR ACCURATE RIGHT OF WAY AND ACCESS DATA, CONTACT RIGHT OF WAY ENGINEERING AT THE DISTRICT OFFICE.

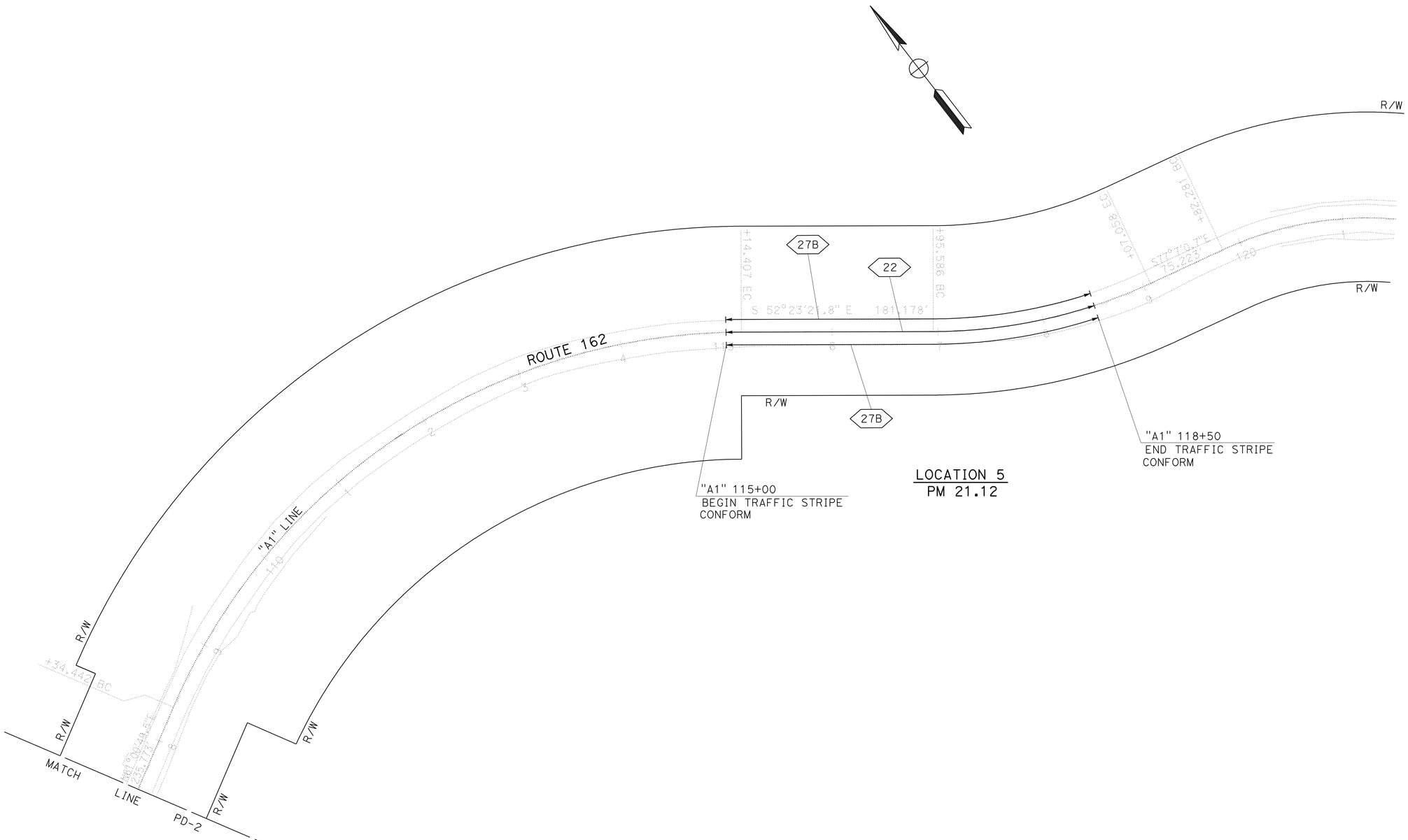

THIS PLAN ACCURATE FOR PAVMENT DELINEATION WORK ONLY

PAVEMENT DELINEATION PLAN

SCALE: 1"=50'

PD-3

REVISED BY | DATE REVISED

CALCULATED-DESIGNED BY: L. MORALES
CHECKED BY: N. FORMOLI

FUNCTIONAL SUPERVISOR: NESAR FORMOLI

STATE OF CALIFORNIA - DEPARTMENT OF TRANSPORTATION
Caltrans
NORTH REGION
OFFICE OF DESIGN, SOUTH
DESIGN BRANCH S14

05:50 20-OCT-2009 trmikesl R:\PSE\01-476401\147640na003.dgn

LAST REVISION 00-00-00 | DATE PLOTTED => 20-OCT-2009 | TIME PLOTTED => 05:50

BORDER LAST REVISED 4/11/2008 | RELATIVE BORDER SCALE IS IN INCHES 0 1 2 3 | USERNAME => trmikesl | DGN FILE => 147640na003.dgn | CU 03264 | EA 476401

Dist	COUNTY	ROUTE	POST MILES TOTAL PROJECT	SHEET No.	TOTAL SHEETS
01	Men	162	20.0/21.2	27	39

Leobardo Morales 7-22-09
REGISTERED CIVIL ENGINEER DATE

10-12-09
PLANS APPROVAL DATE

REGISTERED PROFESSIONAL ENGINEER
LEOBARDO MORALES
No. 72023
Exp. 6-30-10
CIVIL
STATE OF CALIFORNIA

THE STATE OF CALIFORNIA OR ITS OFFICERS OR AGENTS SHALL NOT BE RESPONSIBLE FOR THE ACCURACY OR COMPLETENESS OF SCANNED COPIES OF THIS PLAN SHEET.

TRAFFIC STRIPE

LOCATION	DETAIL No.	4" THERMOPLASTIC TRAFFIC STRIPE		PAVEMENT MARKER (RETROREFLECTIVE RECESSED)
		YELLOW	WHITE	TYPE D
		LF		EA
LOCATION 1	22	522		24
	27B		522	
LOCATION 2	27B		124	
LOCATION 3	27B		84	
LOCATION 4	27B		80	
LOCATION 5	22	700		32
	27B		700	
	SUBTOTAL	1222	1510	56
	TOTAL	2732		56

PAVEMENT DELINEATION QUANTITIES

PDQ-1

STATE OF CALIFORNIA - DEPARTMENT OF TRANSPORTATION
Caltrans
NORTH REGION
OFFICE OF DESIGN, SOUTH
DESIGN BRANCH S14

FUNCTIONAL SUPERVISOR: NESAR FORMOLI
CALCULATED-DESIGNED BY: L. MORALES
CHECKED BY: N. FORMOLI
REVISED BY
DATE REVISED

05:50 20-OCT-2009 trmikesl R:\PSE\01-476401\147640nc001.dgn

LAST REVISION 00-00-00
DATE PLOTTED => 20-OCT-2009
TIME PLOTTED => 05:50

Dist	COUNTY	ROUTE	POST MILES TOTAL PROJECT	SHEET No.	TOTAL SHEETS
01	Men	162	20.0/21.2	28	39

Leobardo Morales 7-22-09
REGISTERED CIVIL ENGINEER DATE

10-12-09
PLANS APPROVAL DATE

REGISTERED PROFESSIONAL ENGINEER
LEOBARDO MORALES
No. 72023
Exp. 6-30-10
CIVIL
STATE OF CALIFORNIA

THE STATE OF CALIFORNIA OR ITS OFFICERS OR AGENTS SHALL NOT BE RESPONSIBLE FOR THE ACCURACY OR COMPLETENESS OF SCANNED COPIES OF THIS PLAN SHEET.

SUMMARY OF QUANTITIES

LOCATION	HOT MIX ASPHALT (TYPE A)	CLASS 2 AGGREGATE BASE	CLASS 2 AGGREGATE SUBBASE	GEOSYNTHETIC REINFORCEMENT	(N) IMPORTED BORROW	ROADWAY EXCAVATION
	TON	CY	CY	SQYD	CY	CY
LOCATION 1	216.3	175.9	216.5			500.7
LOCATION 2	36.7	29.9	18.4	826.7	52.6	473.3
LOCATION 3	25.0	20.3	28.1	749.3	56.0	504.5
LOCATION 4	23.1	13.0	0.0	521.3	31.4	282.8
LOCATION 5	290.1	235.9	127.0			508.1
TOTAL	591.2	475.0	390.0	2097.3	140	2269.4

(N) NOT A SEPARATE PAY ITEM, FOR INFORMATION ONLY.

EROSION CONTROL (TYPE D)

LOCATION	(N) STRAW	(N) FIBER	(N) COMPOST	(N) PURE LIVE SEED	(N) STABILIZING EMULSION
	TON	LB	CY	LB	LB
LOCATION 1	0.02	21.4	0.04	0.97	1.25
LOCATION 2	0.24	256.8	0.43	11.62	15.00
LOCATION 3	0.14	149.8	0.25	6.78	8.75
LOCATION 4	0.14	149.8	0.25	6.78	8.75
TOTAL	0.54	577.8	0.97	26.15	33.75

(N) NOT A SEPARATE PAY ITEM, FOR INFORMATION ONLY.

WATER POLLUTION CONTROL ITEMS

TEMPORARY FIBER ROLL	TEMPORARY GRAVEL BAG BERM	TEMPORARY DRAINAGE INLET PROTECTION	TEMPORARY SILT FENCE	TEMPORARY CHECK DAM	TEMPORARY FENCE (TYPE ESA)
LF	LF	EA	LF	LF	LF
800	910	2	1290	180	555

SUMMARY OF QUANTITIES

Q-1

CALCULATED-DESIGNED BY: L. MORALES
CHECKED BY: N. FORMOLI
REVISED BY
DATE REVISED
FUNCTIONAL SUPERVISOR: NESAR FORMOLI

STATE OF CALIFORNIA - DEPARTMENT OF TRANSPORTATION
Caltrans
NORTH REGION
OFFICE OF DESIGN, SOUTH
DESIGN BRANCH S14

05:51 20-OCT-2009 trmikesl R:\PSE\01-476401\147640pa001.dgn

LAST REVISION 00-00-00
DATE PLOTTED => 20-OCT-2009
TIME PLOTTED => 05:51

DIST	COUNTY	ROUTE	POST MILES TOTAL PROJECT	SHEET NO.	TOTAL SHEETS
01	Men	162	20.0/21.2	29	39

Raymond Don Tsztoo
REGISTERED CIVIL ENGINEER

January 18, 2008
PLANS APPROVAL DATE

REGISTERED PROFESSIONAL ENGINEER Raymond Don Tsztoo No. C37332 Exp. 6-30-08 CIVIL STATE OF CALIFORNIA

The State of California or its officers or agents shall not be responsible for the accuracy or completeness of electronic copies of this plan sheet.

To accompany plans dated 10-12-09

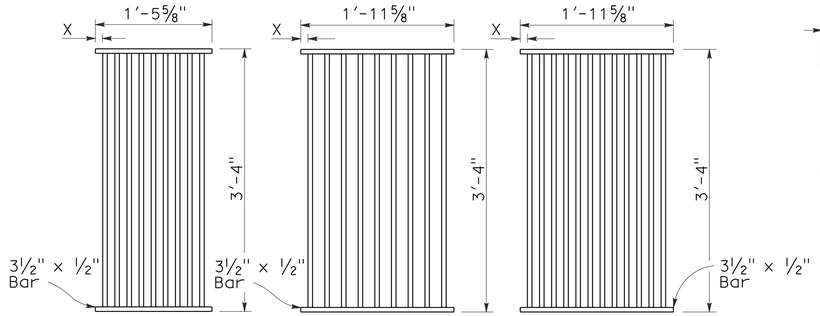

TYPE 18-9

1⅜" Clear spacing. Use within the roadbed on highways where bicycles and pedestrians are excluded.

TYPE 24-9

2" Clear spacing. Use in locations off the roadbed on all types of highways.

TYPE 24-12

1⅜" Clear spacing. Use within the roadbed on highways where bicycles and pedestrians are excluded.

RECTANGULAR GRATE DETAILS

(See table below)

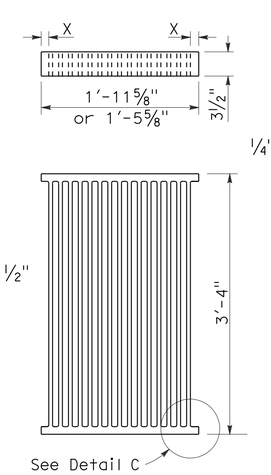

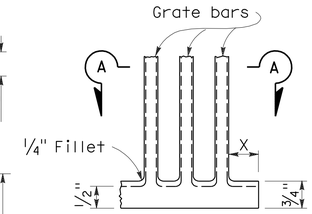

DETAIL C

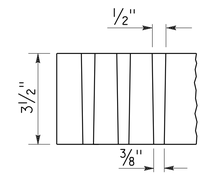

SECTION A-A

ALTERNATIVE CAST NODULAR IRON GRATE OR CAST STEEL GRATE

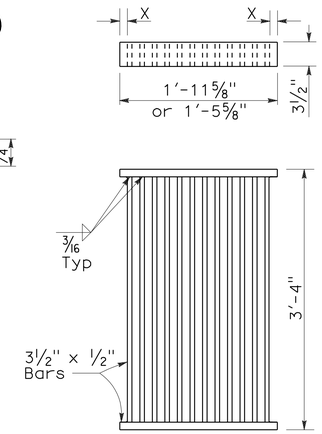

ALTERNATIVE WELDED GRATE

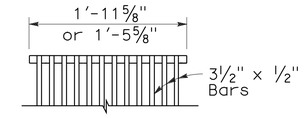

CAST END BLOCK

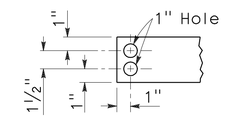

END OF BAR

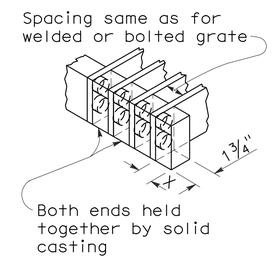

ALTERNATIVE CAST NODULAR IRON OR CAST STEEL END BLOCK GRATE

NOTES:

1. Grate type numbers refer to approximate width of grate in inches and number of bars, respectively.
2. Contractor has the option of using cast nodular iron, cast steel, welded, bolted, or cast end block grate.
3. See Special Provisions for requirements pertaining to galvanizing or asphalt dipping of grates and frames.
4. Rounded top of bars optional on all grates.
5. Pipe inlets with a grate shall be placed so that bars parallel direction of principle surface flow.
6. Full penetration butt welds may be substituted for the fillet welds on all anchors.
7. Standard square, hexagon, round or equivalent headed anchors may be substituted for the right angle hooks on the anchors shown on this plan.
8. Grate and frame weights are based on welded grates (weights of face angles, steps, protection bars, etc. are not included).

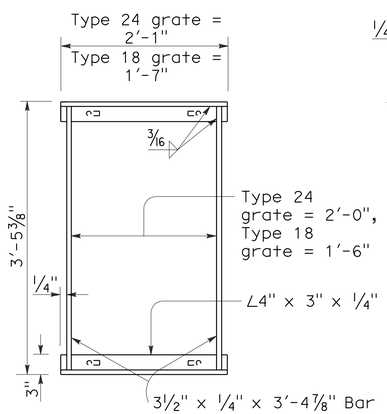

TYPICAL FRAME

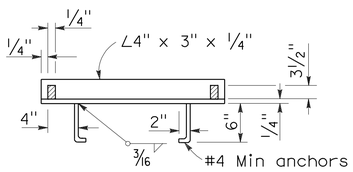

CROSS SECTION

(Thru frame)

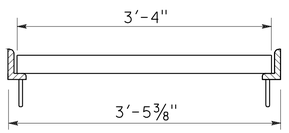

LONGITUDINAL SECTION

(Thru frame and grate)

RECTANGULAR FRAME DETAILS

(For all rectangular grates)

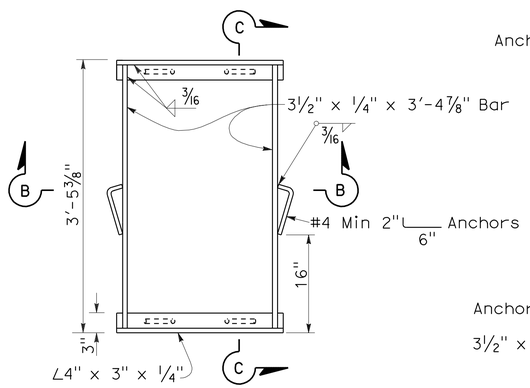

TYPICAL FRAME

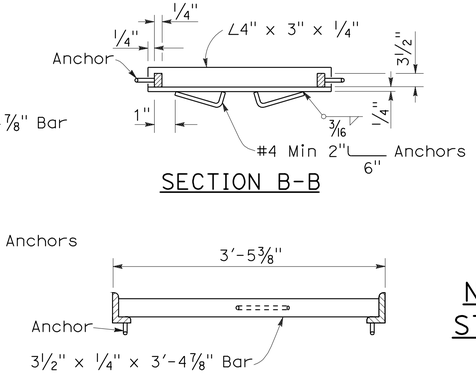

SECTION B-B

SECTION C-C

ALTERNATIVE ANCHOR FOR RECTANGULAR FRAME

(For details not shown, See Rectangular Frame Details)

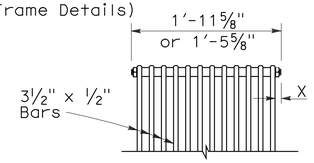

BOLTED END BLOCK

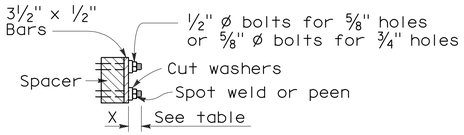

BOLTING DETAIL

ALTERNATIVE BOLTED GRATE

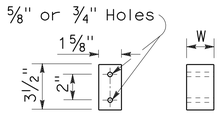

BAR SPACER

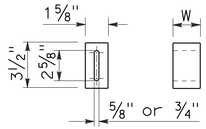

ALTERNATIVE SPACER

W = 1⅜" or 2"

GRATE BAR SPACING TABLE

TYPE	No. OF BARS	CLEAR BAR SPACING	X
18-9	9	1⅜"	1 1/16"
24-9	9	2"	1 9/16"
24-12	12	1⅜"	1¼"

INLET TYPE	COVER TYPE	WEIGHT LB
OS	PLATE	174
OL-7	PLATE	170
OL-10	PLATE	170
OL-14	PLATE	170
OL-21	PLATE	170
OCP	PLATE	112
OCPI	PLATE	112
OCPI	REDWOOD	42
OMP	PLATE	177
OMPI	PLATE	177

INLET TYPE	GRATE TYPE	No. OF GRATES	WEIGHT LB
GDO	24-12	2	634
GOL-7	24-12	1	326
GOL-10	24-12	1	326
GO,G1,G2,G3,G4 (TYPE 24)	24-9	1	263
	24-12	1	326
G4 (TYPE 18),G5,G6	18-9	1	249
GT1	18-9	2	498
GT2	18-9	2	498
GT3	24-12	2	652
GT4	24-12	2	652
TRASH RACK			22

BASIS FOR MISC IRON & STEEL FINAL PAY WEIGHTS FOR DRAINAGE INLETS

(See General Notes, No 8)

STATE OF CALIFORNIA
DEPARTMENT OF TRANSPORTATION

GRATE DETAILS

NO SCALE

RSP D77A DATED JANUARY 18, 2008 SUPERSEDES STANDARD PLAN D77A DATED MAY 1, 2006 - PAGE 155 OF THE STANDARD PLANS BOOK DATED MAY 2006.

REVISED STANDARD PLAN RSP D77A

2006 REVISED STANDARD PLAN RSP D77A

12-14-07

DIST	COUNTY	ROUTE	POST MILES TOTAL PROJECT	SHEET NO.	TOTAL SHEETS
01	Men	162	20.0/21.2	30	39

Randell D. Hiatt
REGISTERED CIVIL ENGINEER

June 6, 2008
PLANS APPROVAL DATE

REGISTERED PROFESSIONAL ENGINEER
Randell D. Hiatt
No. C50200
Exp. 6-30-09
CIVIL
STATE OF CALIFORNIA

The State of California or its officers or agents shall not be responsible for the accuracy or completeness of electronic copies of this plan sheet.

To accompany plans dated 10-12-09

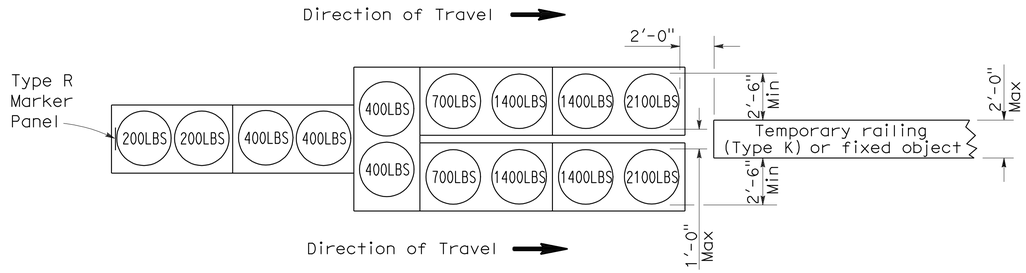

ARRAY 'TU14'

Approach speed 45 mph or more

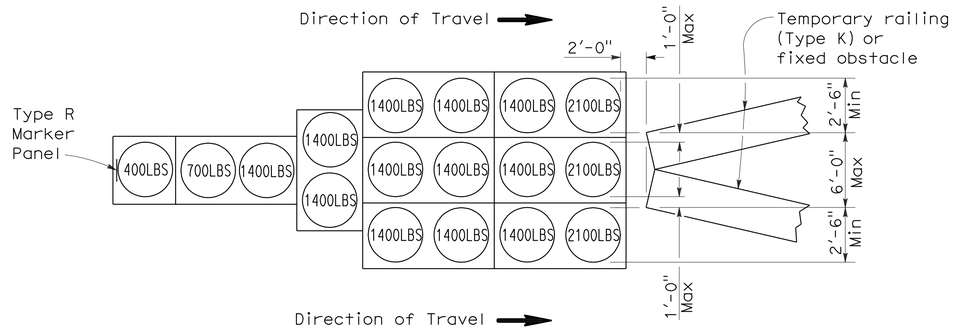

ARRAY 'TU17'

Approach speed less than 45 mph

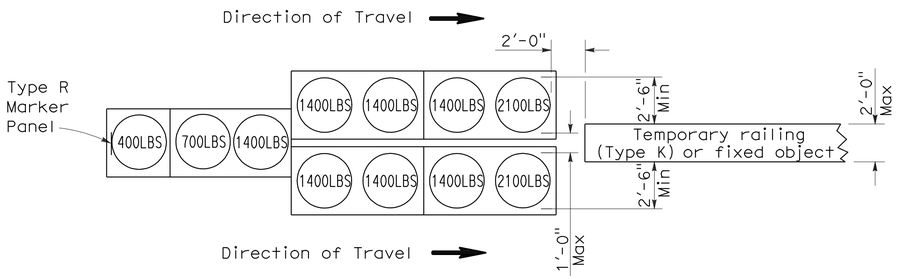

ARRAY 'TU11'

Approach speed less than 45 mph

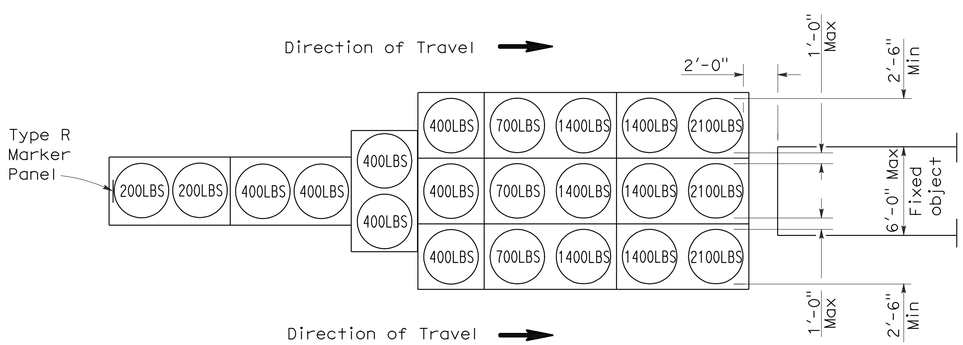

ARRAY 'TU21'

Approach speed 45 mph or more

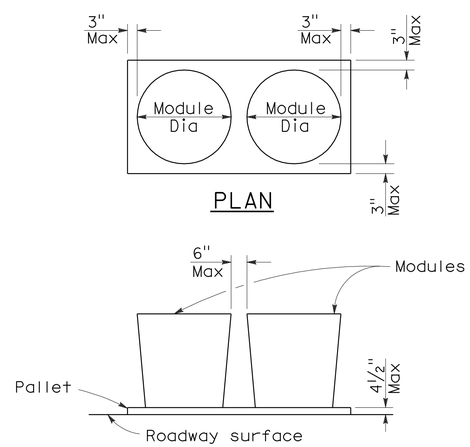

ELEVATION

CRASH CUSHION PALLET DETAIL

See Note 7

NOTES:

1. (XXX) Indicates sand filled module location and weight of sand in pounds for each module. Module spacing is based on the greater diameter of the module.
2. All sand weights are nominal.
3. Temporary crash cushion arrays shall not encroach on the traveled way.
4. Place the top of Type R marker panel 1" below the module lid.
5. Refer to Standard Plan A73B for marker details.
6. Approach speeds indicated conform to NCHRP 350 Report criteria.
7. Use of pallets is optional.

STATE OF CALIFORNIA
DEPARTMENT OF TRANSPORTATION

TEMPORARY CRASH CUSHION, SAND FILLED (UNIDIRECTIONAL)

NO SCALE

RSP T1A DATED JUNE 6, 2008 SUPERSEDES STANDARD PLAN T1A
DATED MAY 1, 2006 - PAGE 211 OF THE STANDARD PLANS BOOK DATED MAY 2006.

REVISED STANDARD PLAN RSP T1A

2006 REVISED STANDARD PLAN RSP T1A

DIST	COUNTY	ROUTE	POST MILES TOTAL PROJECT	SHEET NO.	TOTAL SHEETS
01	Men	162	20.0/21.2	31	39

Randell D. Hiatt
REGISTERED CIVIL ENGINEER

June 6, 2008
PLANS APPROVAL DATE

REGISTERED PROFESSIONAL ENGINEER
Randell D. Hiatt
No. C50200
Exp. 6-30-09
CIVIL
STATE OF CALIFORNIA

The State of California or its officers or agents shall not be responsible for the accuracy or completeness of electronic copies of this plan sheet.

To accompany plans dated 10-12-09

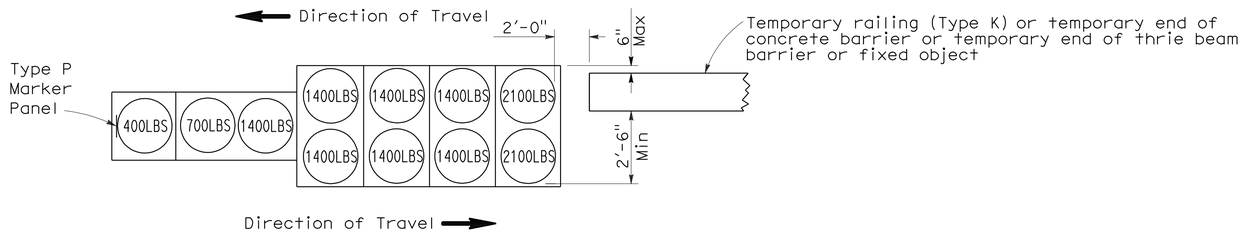

ARRAY 'TB11'

Approach speed less than 45 mph

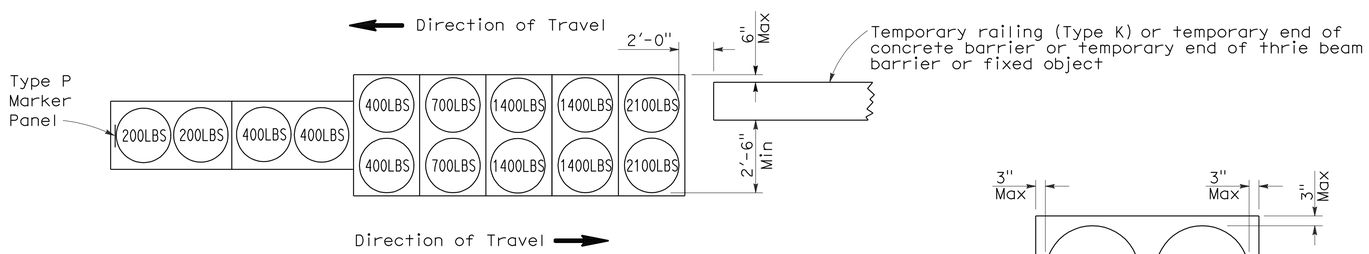

ARRAY 'TB14'

Approach speed 45 mph or more

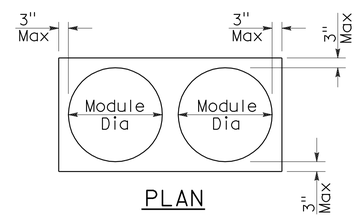

PLAN

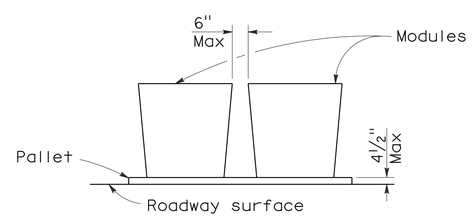

ELEVATION

CRASH CUSHION PALLET DETAIL

See Note 7

NOTES:

1. (XXX) Indicates sand filled module location and weight of sand in pounds for each module. Module spacing is based on the greater diameter of the module.
2. All sand weights are nominal.
3. Temporary crash cushion arrays shall not encroach on the traveled way.
4. Place the Type P marker panel so that the bottom of the panel rests upon the pallet.
5. Refer to Standard Plan A73B for marker details.
6. Approach speeds indicated conform to NCHRP 350 Report criteria.
7. Use of pallets is optional.

STATE OF CALIFORNIA
DEPARTMENT OF TRANSPORTATION

TEMPORARY CRASH CUSHION, SAND FILLED (BIDIRECTIONAL)

NO SCALE

RSP T1B DATED JUNE 6, 2008 SUPERSEDES STANDARD PLAN T1B
DATED MAY 1, 2006 - PAGE 212 OF THE STANDARD PLANS BOOK DATED MAY 2006.

REVISED STANDARD PLAN RSP T1B

2006 REVISED STANDARD PLAN RSP T1B

5-15-08

DIST	COUNTY	ROUTE	POST MILES TOTAL PROJECT	SHEET NO.	TOTAL SHEETS
01	Men	162	20.0/21.2	32	39

Randell D. Hiatt
REGISTERED CIVIL ENGINEER

June 6, 2008
PLANS APPROVAL DATE

REGISTERED PROFESSIONAL ENGINEER
Randell D. Hiatt
No. C50200
Exp. 6-30-09
CIVIL
STATE OF CALIFORNIA

The State of California or its officers or agents shall not be responsible for the accuracy or completeness of electronic copies of this plan sheet.

To accompany plans dated 10-12-09

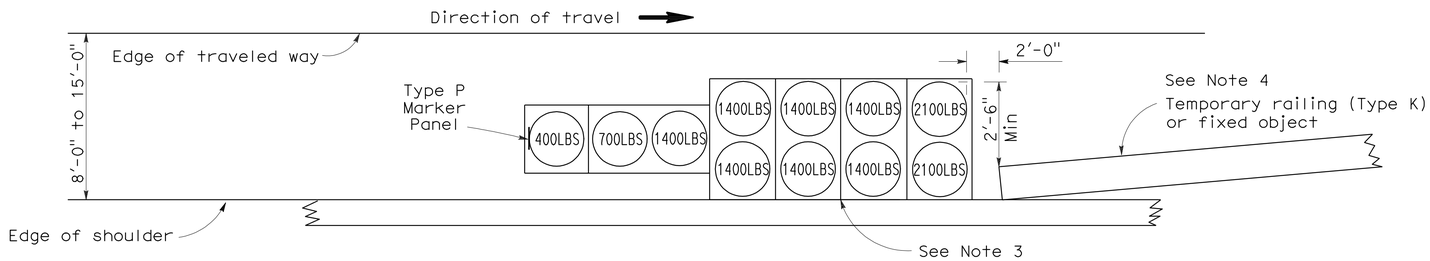

ARRAY 'TS11'

Approach speed less than 45 mph
See Note 9

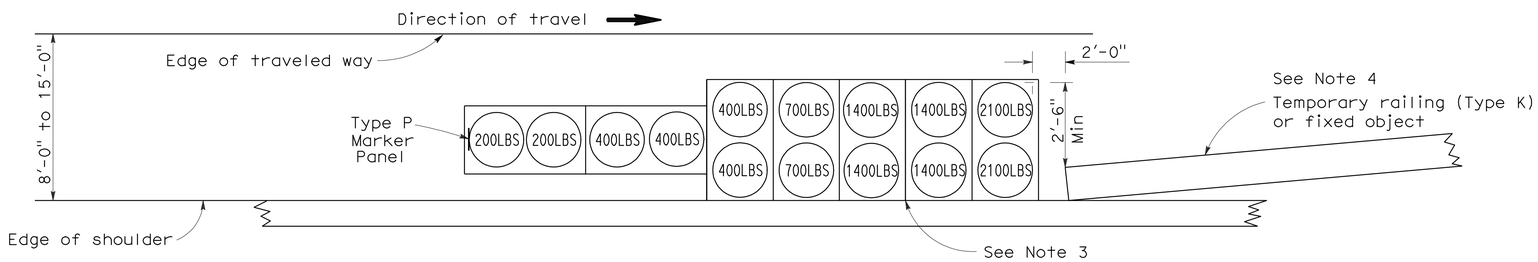

ARRAY 'TS14'

Approach speed 45 mph or more
See Note 9

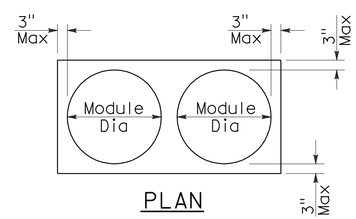

PLAN

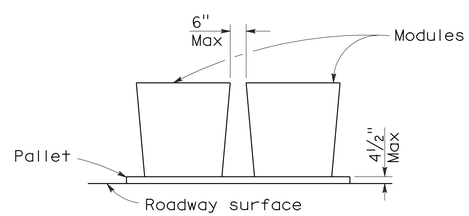

ELEVATION

CRASH CUSHION PALLET DETAIL

See Note 11

NOTES:

1. (XXX) Indicates sand filled module location and weight of sand in pounds for each module. Module spacing is based on the greater diameter of the module.
2. All sand weights are nominal.
3. The temporary crash cushion arrays shown on this plan shall be used only in locations where there will be traffic on one side of the temporary crash cushion array.
4. If the fixed object or approach end of the temporary railing is less than 15'-0" from the edge of traveled way, a temporary crash cushion is required in a construction or work zone.
5. Temporary crash cushion arrays shall not encroach on the traveled way.
6. Arrays for median shoulders shall conform to details shown on this plan for outside shoulders.
7. Place the Type P marker panel so that the bottom of the panel rests upon the pallet and faces traffic.
8. Refer to Standard Plan A73B for marker details.
9. For shoulder widths less than 8'-0", appropriate approved crash cushion protection, other than sand filled modules, shall be provided at fixed objects and at approach ends of temporary railing. The specific type of crash cushion shall be as shown on the project plans or as specified in the Special Provisions, or if not shown on the project plans or specified in the Special Provisions, shall be as approved by the Engineer.
10. Approach speeds indicated conform to NCHRP 350 Report criteria.
11. Use of pallets is optional.

STATE OF CALIFORNIA
DEPARTMENT OF TRANSPORTATION

TEMPORARY CRASH CUSHION, SAND FILLED (SHOULDER INSTALLATIONS)

NO SCALE

RSP T2 DATED JUNE 6, 2008 SUPERSEDES STANDARD PLAN T2
DATED MAY 1, 2006 - PAGE 213 OF THE STANDARD PLANS BOOK DATED MAY 2006.

REVISED STANDARD PLAN RSP T2

2006 REVISED STANDARD PLAN RSP T2

5-15-08

DIST	COUNTY	ROUTE	POST MILES TOTAL PROJECT	SHEET NO.	TOTAL SHEETS
01	Men	162	20.0/21.2	33	39

REGISTERED CIVIL ENGINEER

November 17, 2006
PLANS APPROVAL DATE

REGISTERED PROFESSIONAL ENGINEER
Greg W. Edwards
No. C36386
Exp. 6-30-08
CIVIL
STATE OF CALIFORNIA

The State of California or its officers or agents shall not be responsible for the accuracy or completeness of electronic copies of this plan sheet.

To accompany plans dated 10-12-09

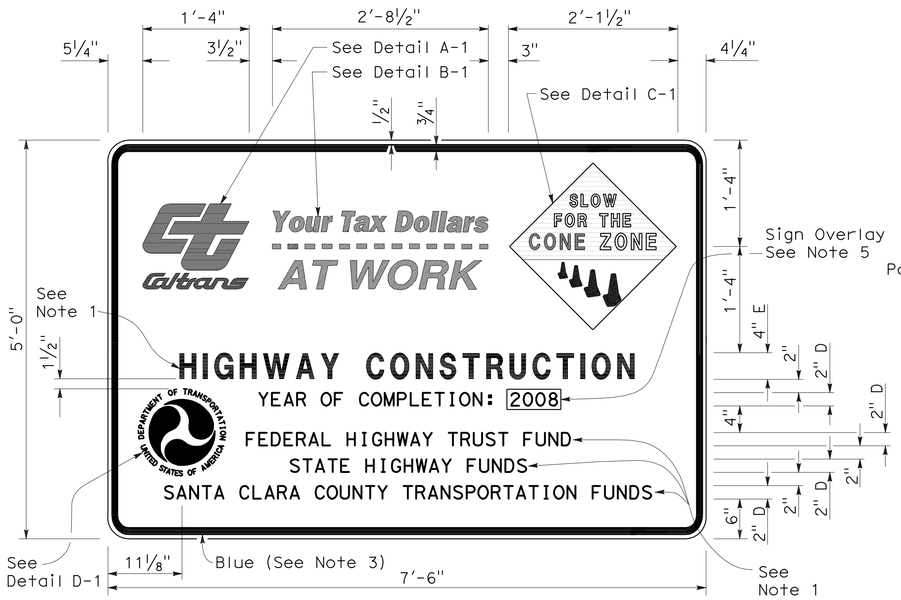

TYPE 1

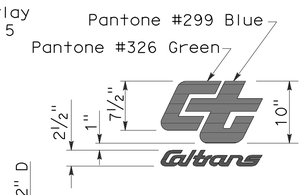

DETAIL A-1

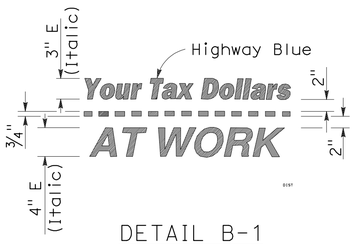

DETAIL B-1
(See Note 3)

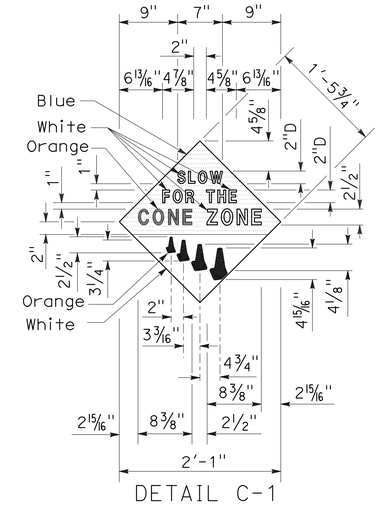

DETAIL C-1
(See Note 4)

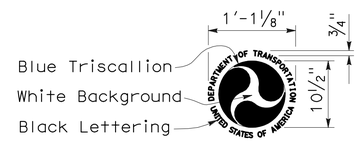

DETAIL D-1
(See Note 6)

NOTES:

1. The sign messages shown for type of project and fund types are examples only. See the Special Provisions for the applicable type of project and fund type messages to be used.
2. Except as otherwise shown, the legend of sign shall be black on a white background (non-reflective).
3. The border of the signs and details "B-1" and "B-2" shall be blue (non-reflective).
4. The diamond in details "C-1" and "C-2" shall be blue for the background of message, " SLOW FOR THE CONE ZONE", and white background for the orange cones. The color and type of font for the "SLOW FOR THE CONE ZONE" message shall be: "SLOW" white D; "FOR THE" white D; "CONE" orange Arial font; "ZONE" white Arial font.
5. Year of completion of project construction shown on the overlay is an example only. See the Special Provisions.
6. Use when the Project involves Federal Highway Trust Fund.

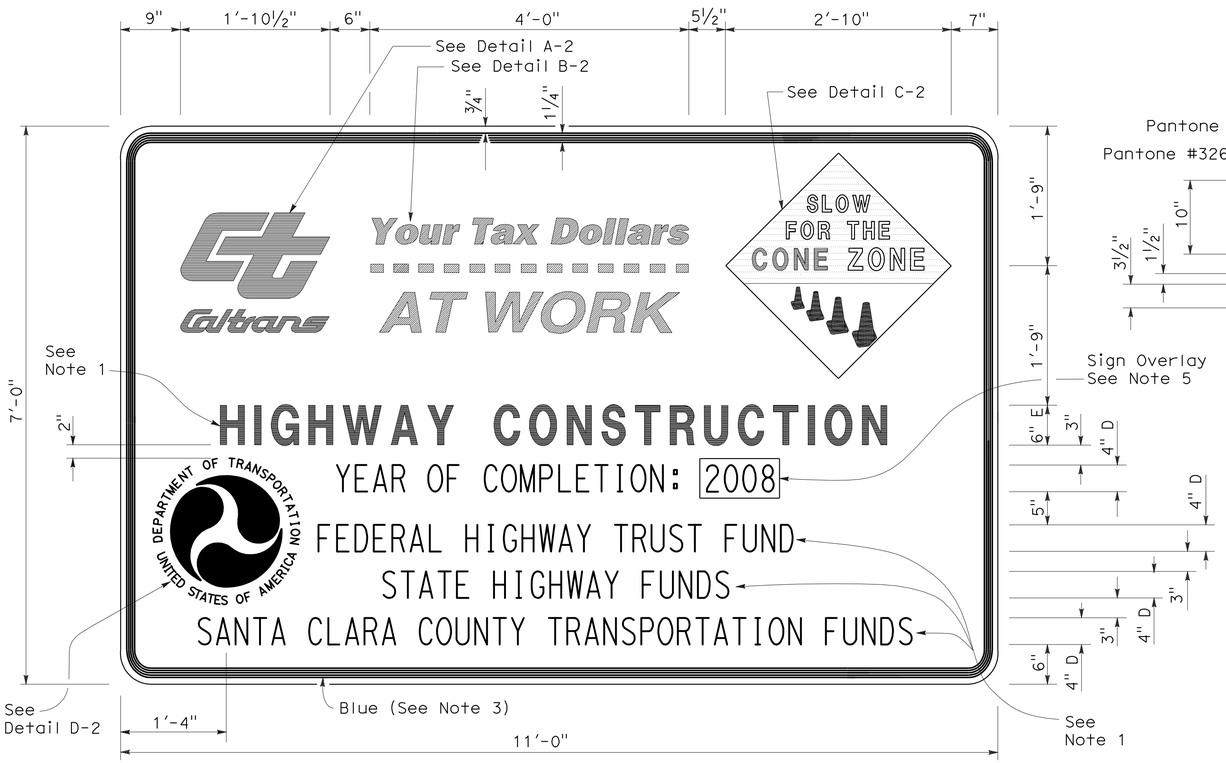

TYPE 2

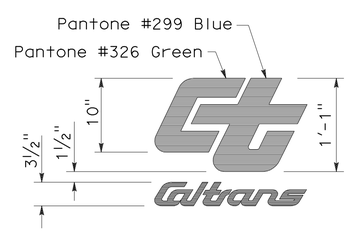

DETAIL A-2

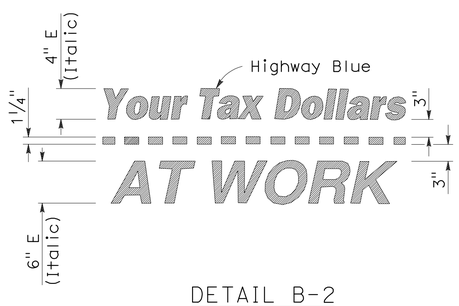

DETAIL B-2
(See Note 3)

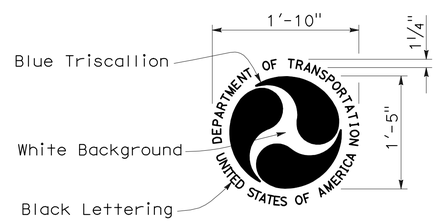

DETAIL D-2
(See Note 6)

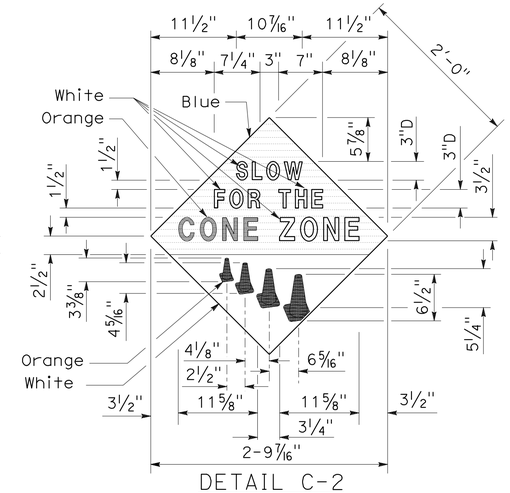

DETAIL C-2
(See Note 4)

STATE OF CALIFORNIA
DEPARTMENT OF TRANSPORTATION

CONSTRUCTION PROJECT FUNDING IDENTIFICATION SIGNS

NO SCALE

RSP T7 DATED NOVEMBER 17, 2006 SUPERSEDES STANDARD PLAN T7
DATED MAY 1, 2006 - PAGE 217 OF THE STANDARD PLANS BOOK DATED MAY 2006.

REVISED STANDARD PLAN RSP T7

2006 REVISED STANDARD PLAN RSP T7

9-7-06

DIST	COUNTY	ROUTE	POST MILES TOTAL PROJECT	SHEET NO.	TOTAL SHEETS
01	Men	162	20.0/21.2	34	39

Robert B Schott
LICENSED LANDSCAPE ARCHITECT

April 3, 2009
PLANS APPROVAL DATE

LICENSED LANDSCAPE ARCHITECT
Robert B. Schott 3695
Signature
11-30-10
Renewal Date
2-25-09
Date
STATE OF CALIFORNIA

The State of California or its officers or agents shall not be responsible for the accuracy or completeness of electronic copies of this plan sheet.

To accompany plans dated 10-12-09

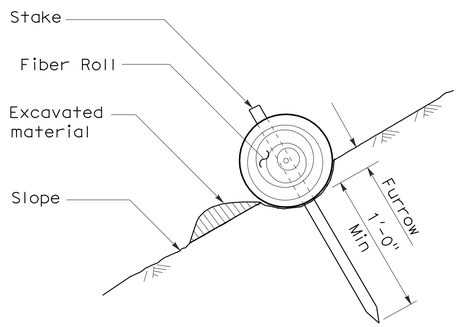

SECTION

TEMPORARY FIBER ROLL (TYPE 1)

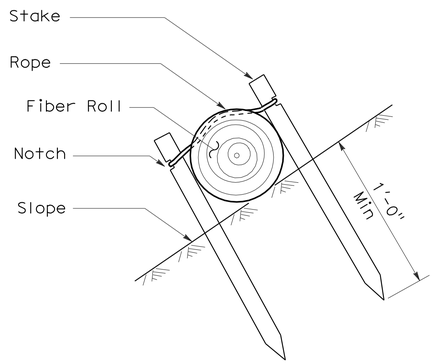

SECTION

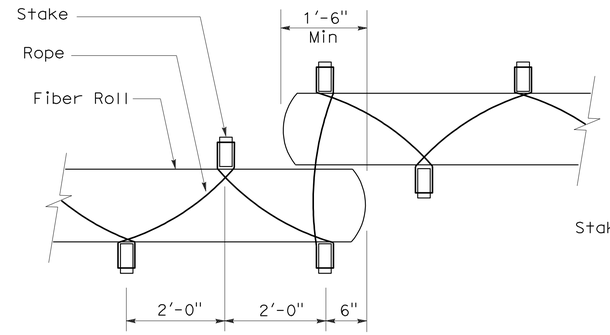

PLAN

TEMPORARY FIBER ROLL (TYPE 2)

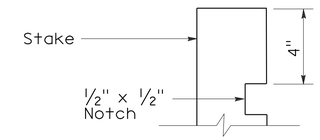

ELEVATION

STAKE NOTCH DETAIL

NOTES:

1. Temporary fiber roll spacing varies depending upon slope inclination.
2. Installations shown in the perspectives are for slope inclination of 10:1 and steeper.

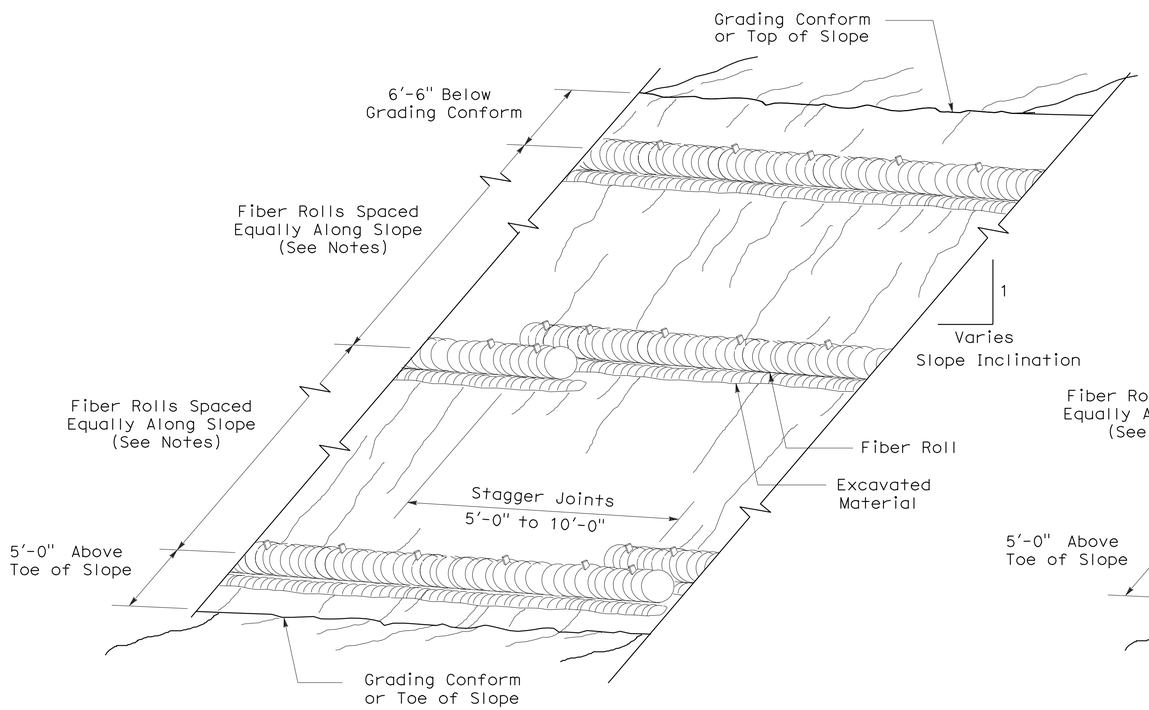

PERSPECTIVE

TEMPORARY FIBER ROLL (TYPE 1)

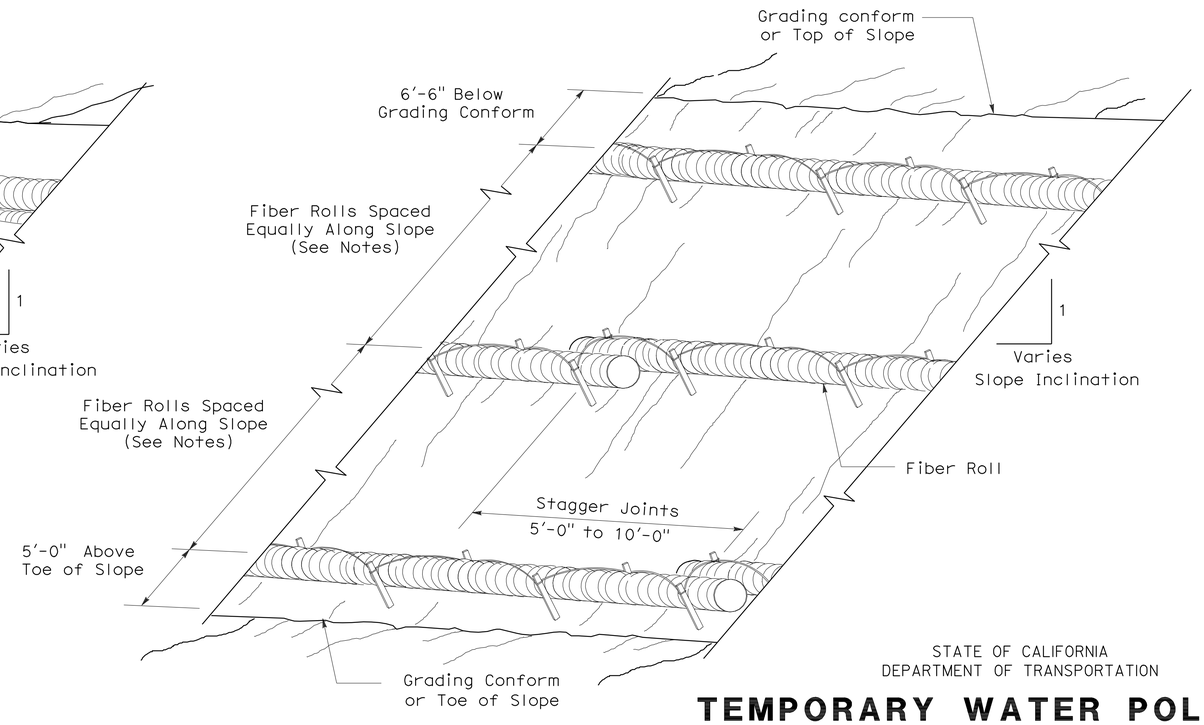

PERSPECTIVE

TEMPORARY FIBER ROLL (TYPE 2)

STATE OF CALIFORNIA
DEPARTMENT OF TRANSPORTATION

TEMPORARY WATER POLLUTION CONTROL DETAILS (TEMPORARY FIBER ROLL)

NO SCALE

RSP T56 DATED APRIL 3, 2009 SUPERSEDES STANDARD PLAN T56 DATED MAY 1, 2006 - PAGE 232 OF THE STANDARD PLANS BOOK DATED MAY 2006.

REVISED STANDARD PLAN RSP T56

2006 REVISED STANDARD PLAN RSP T56

2-23-09

DIST	COUNTY	ROUTE	POST MILES TOTAL PROJECT	SHEET NO.	TOTAL SHEETS
01	Men	162	20.0/21.2	35	39

Robert B Schott
LICENSED LANDSCAPE ARCHITECT

August 15, 2008
PLANS Approval DATE

LICENSED LANDSCAPE ARCHITECT
Robert B. Schott 3625
Robert B Schott
Signature
11-04-08
Renewal Date
08-11-08
Date
STATE OF CALIFORNIA

The State of California or its officers or agents shall not be responsible for the accuracy or completeness of electronic copies of this plan sheet.

To accompany plans dated 10-12-09

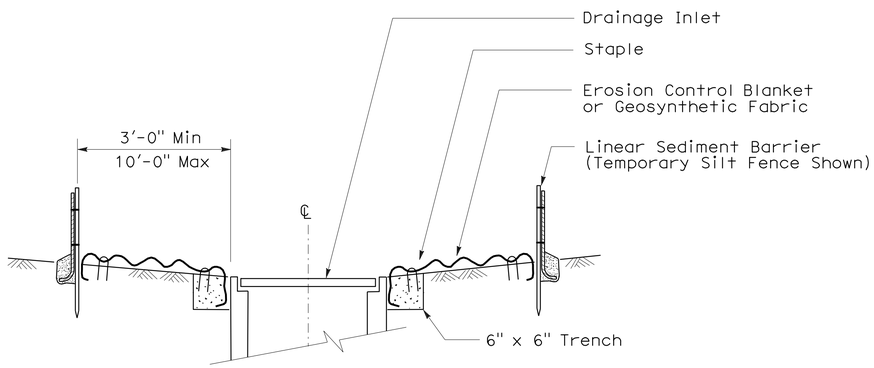

SECTION A-A

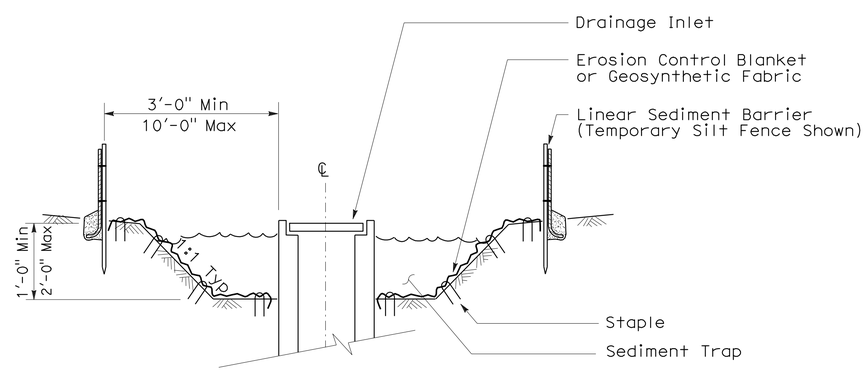

SECTION B-B

NOTES:

1. See Standard Plan T51 for Temporary Silt Fence.
2. Dimensions may vary to fit field conditions.

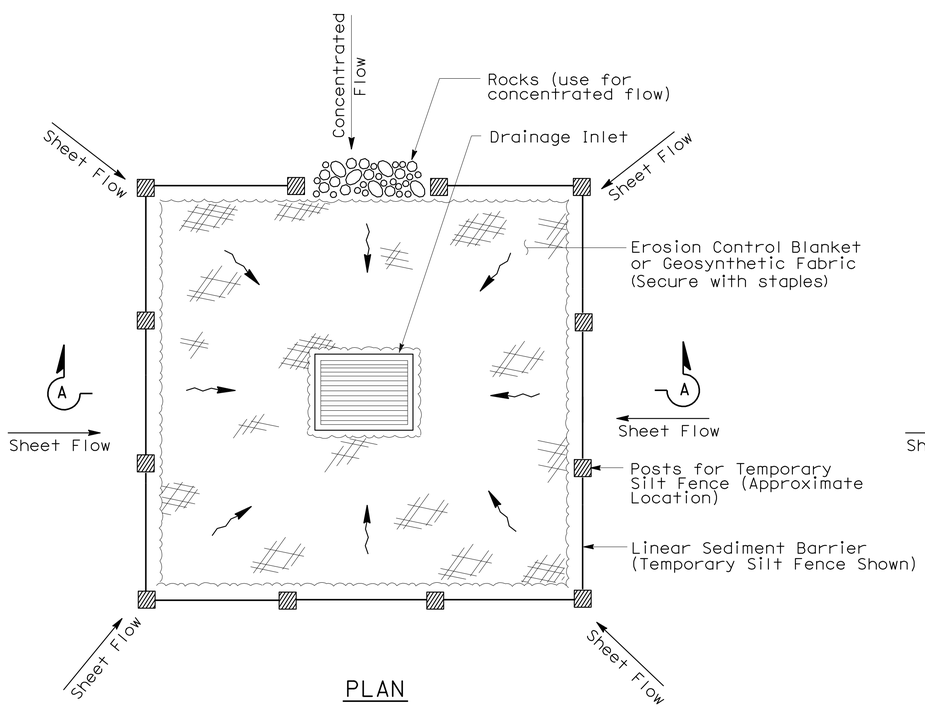

PLAN

TEMPORARY DRAINAGE INLET PROTECTION (TYPE 1)

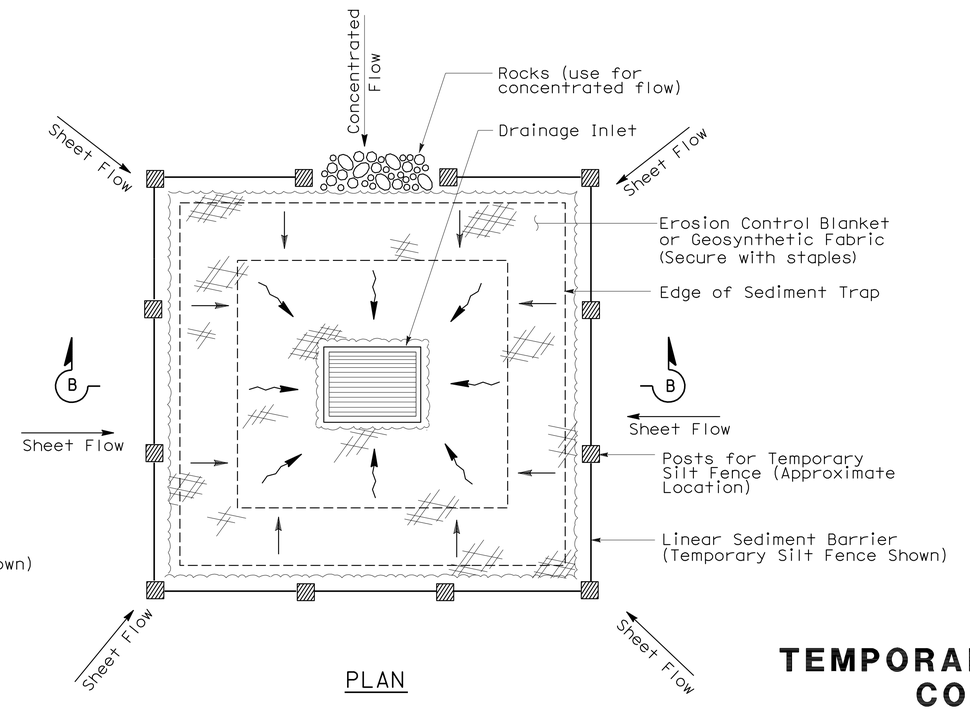

PLAN

TEMPORARY DRAINAGE INLET PROTECTION (TYPE 2) (EXCAVATED SEDIMENT TRAP)

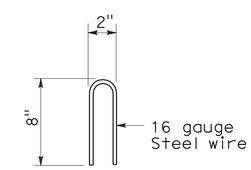

STAPLE DETAIL

STATE OF CALIFORNIA
DEPARTMENT OF TRANSPORTATION

TEMPORARY WATER POLLUTION CONTROL DETAILS (TEMPORARY DRAINAGE INLET PROTECTION)

NO SCALE

NSP T61 DATED AUGUST 15, 2008 SUPPLEMENTS THE STANDARD PLANS BOOK DATED MAY 2006.

NEW STANDARD PLAN NSP T61

2006 NEW STANDARD PLAN NSP T61

7-11-08

DIST	COUNTY	ROUTE	POST MILES TOTAL PROJECT	SHEET NO.	TOTAL SHEETS
01	Men	162	20.0/21.2	36	39

LICENSED LANDSCAPE ARCHITECT

August 15, 2008
PLANS APPROVAL DATE

LICENSED LANDSCAPE ARCHITECT Robert B. Schott 3625 Signature 11-04-08 Renewal Date 08-11-08 Date STATE OF CALIFORNIA

The State of California or its officers or agents shall not be responsible for the accuracy or completeness of electronic copies of this plan sheet.

To accompany plans dated 10-12-09

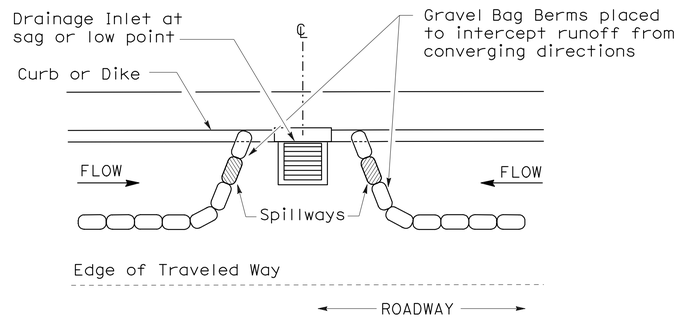

PLAN

CONFIGURATION FOR SAG POINT INLET (GRAVEL BAG BERM)

GRAVEL BAG BERM (TYPE 3A) SPACING TABLE

SLOPE OF ROADWAY (PERCENT)	1 to 3.9	4 to 5.9	6 to 7.9	8 to 10	10+
INTERVAL BETWEEN BERM	100′	75′	50′	25′	12′

For slope of less than 1%, install barriers only if erosion/sediment is prevalent

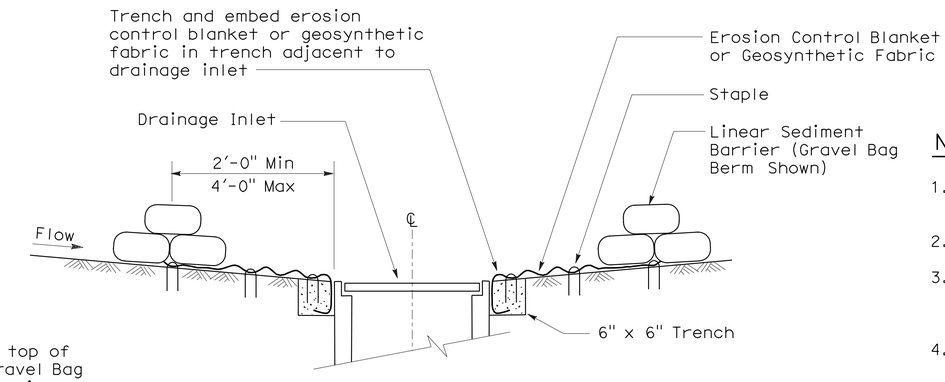

SECTION A-A

NOTES:

1. Place safety cones adjacent to drainage inlet protection.
2. Dimensions may vary to fit field conditions.
3. Install a minimum of 3 gravel bag berms upstream of each drainage inlet to be protected.
4. Position erosion control blanket or geosynthetic fabric at edge of concrete apron and secure in trench.
5. Erosion control blanket or geosynthetic fabric is not required if the area adjacent to the drainage inlet is vegetated or paved.

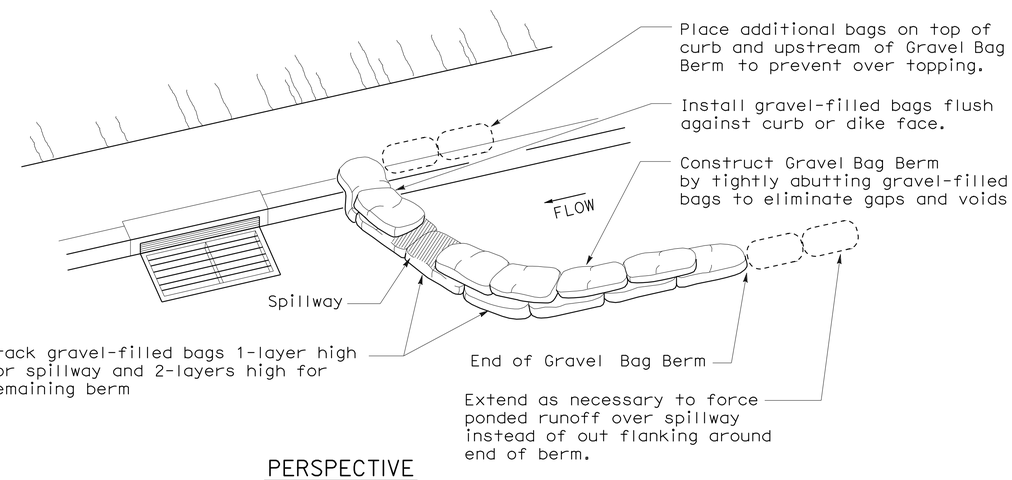

PERSPECTIVE

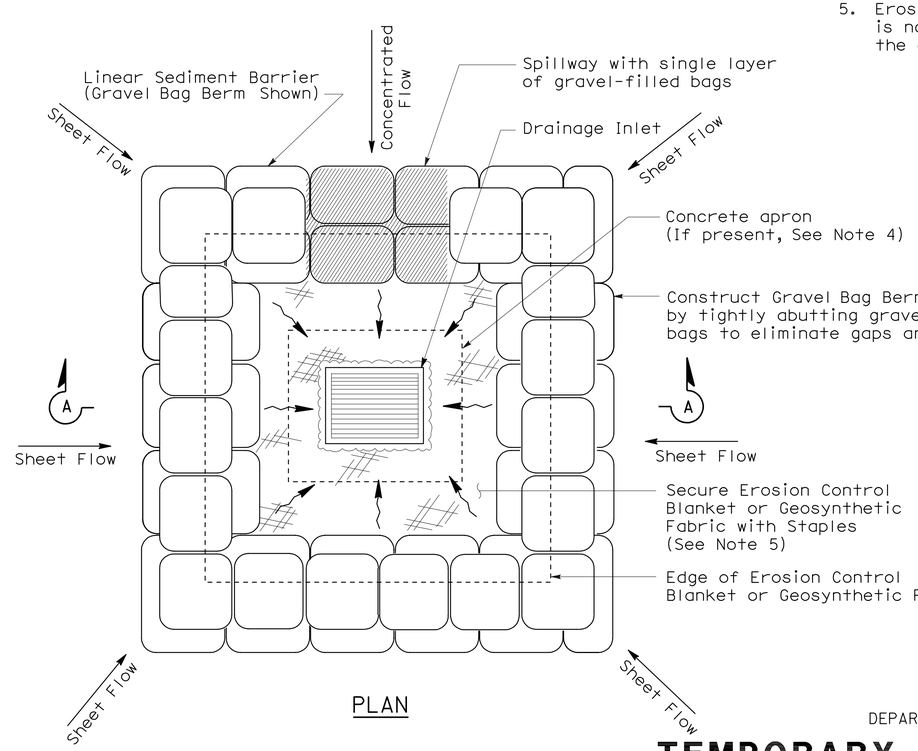

PLAN

TEMPORARY DRAINAGE INLET PROTECTION (TYPE 3B)

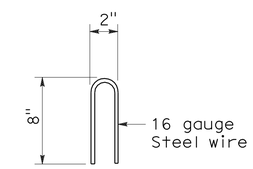

STAPLE DETAIL

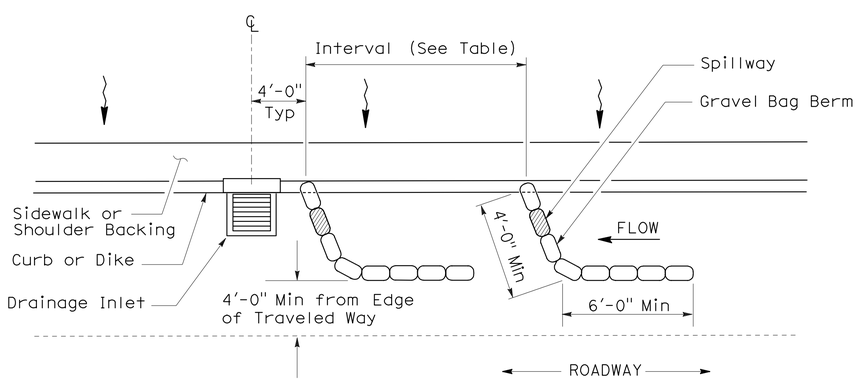

PLAN

TEMPORARY DRAINAGE INLET PROTECTION (TYPE 3A) (GRAVEL BAG BERM)

STATE OF CALIFORNIA
DEPARTMENT OF TRANSPORTATION

TEMPORARY WATER POLLUTION CONTROL DETAILS (TEMPORARY DRAINAGE INLET PROTECTION)

NO SCALE

NSP T62 DATED AUGUST 15, 2008 SUPPLEMENTS THE STANDARD PLANS BOOK DATED MAY 2006.

NEW STANDARD PLAN NSP T62

2006 NEW STANDARD PLAN NSP T62

7-11-08

DIST	COUNTY	ROUTE	POST MILES TOTAL PROJECT	SHEET NO.	TOTAL SHEETS
01	Men	162	20.0/21.2	37	39

Robert B Schott
LICENSED LANDSCAPE ARCHITECT

August 15, 2008
PLANS APPROVAL DATE

The State of California or its officers or agents shall not be responsible for the accuracy or completeness of electronic copies of this plan sheet.

LICENSED LANDSCAPE ARCHITECT — Robert B. Schott 3625 — Signature — 11-04-08 Renewal Date — 08-11-08 Date — STATE OF CALIFORNIA

To accompany plans dated 10-12-09

FLEXIBLE SEDIMENT BARRIER SPACING TABLE

SLOPE OF ROADWAY (PERCENT)	0 to 0.9	1 to 1.9	2 to 2.9	3 to 4	5+
INTERVAL BETWEEN BARRIERS	50′	35′	30′	25′	20′
ANGLE FROM FACE OF CURB	70°	70°	70°	45°	45°
SUGGESTED BARRIER LENGTH	6′	6′	6′	6′	6′

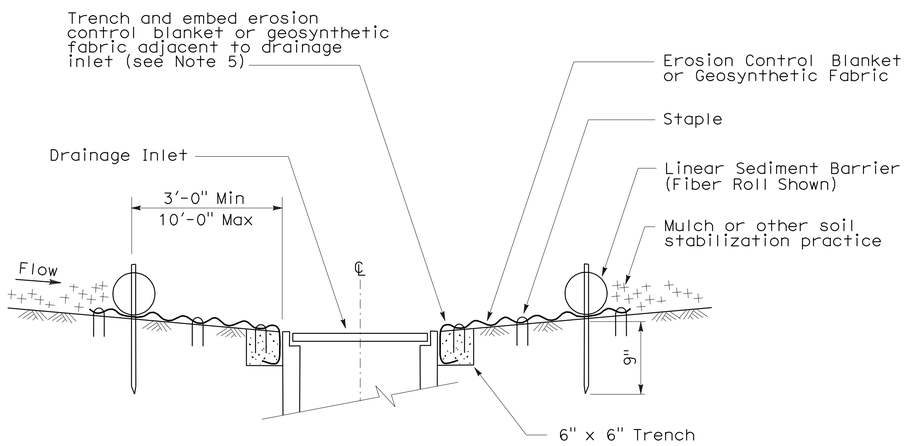

SECTION A-A

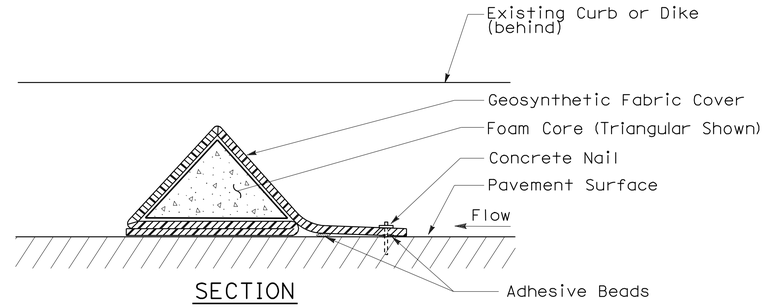

SECTION

FLEXIBLE SEDIMENT BARRIER DETAIL (FOAM BARRIER SHOWN)

NOTES:

1. See Standard Plan T51 for Temporary Silt Fence.
2. Dimensions may vary to fit field conditions.
3. Install a minimum of 3 flexible sediment barriers upstream of each drainage inlet to be protected.
4. Position erosion control blanket or geosynthetic fabric at edge of concrete apron and secure in trench.
5. Erosion control blanket or geosynthetic fabric is not required if the area adjacent to the drainage inlet is vegetated.

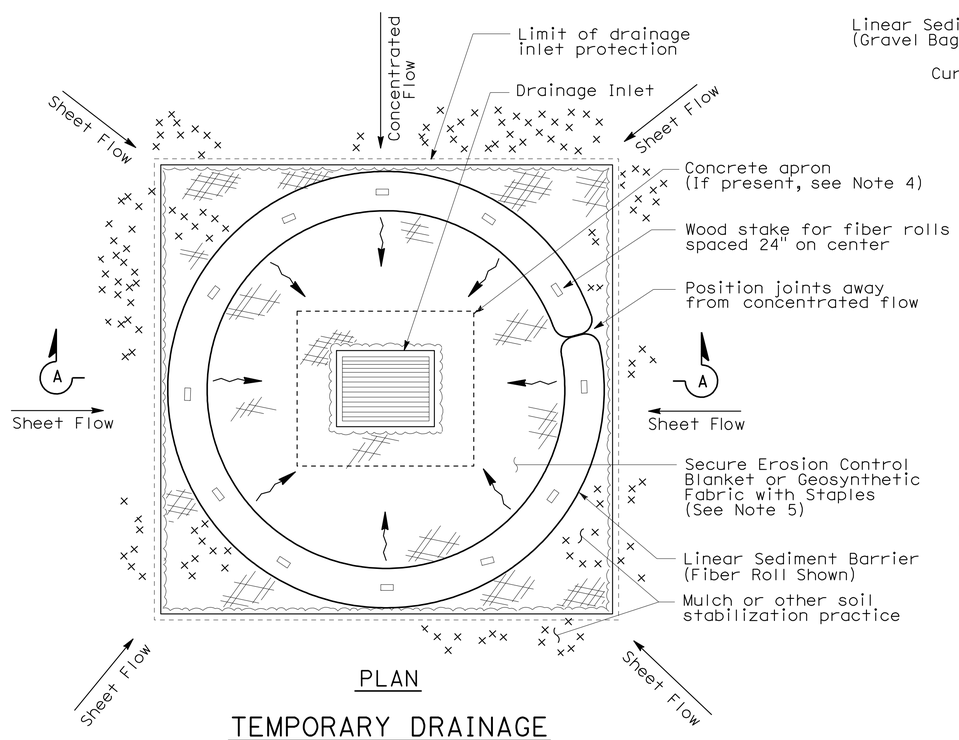

PLAN

TEMPORARY DRAINAGE INLET PROTECTION (TYPE 4A)

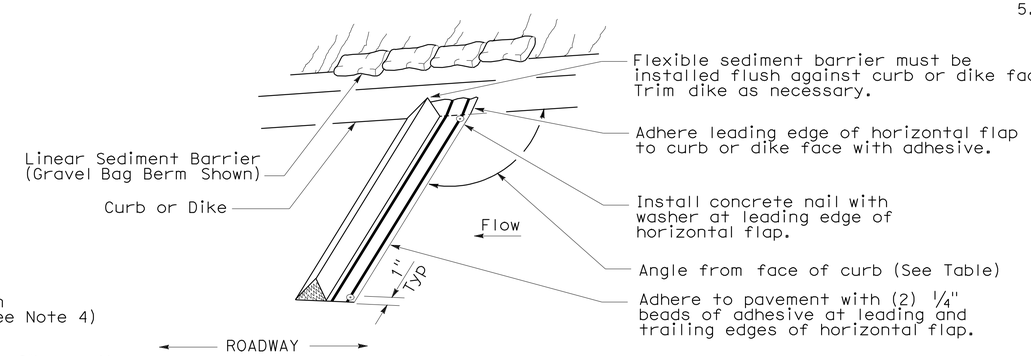

PERSPECTIVE

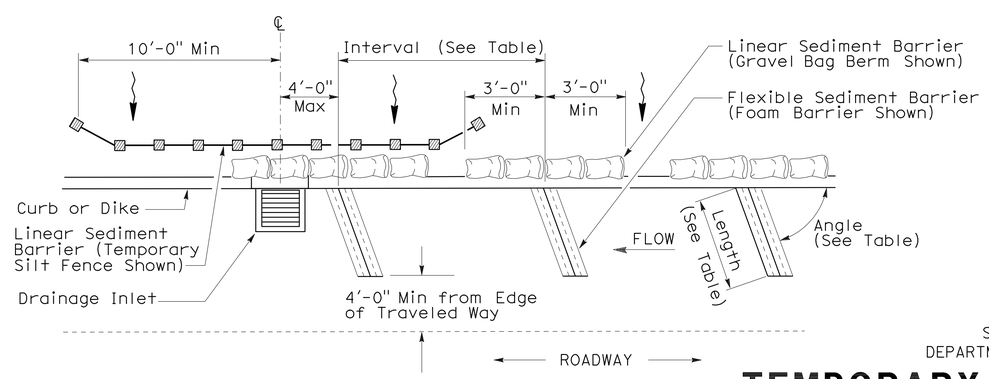

PLAN

TEMPORARY DRAINAGE INLET PROTECTION (TYPE 4B) FLEXIBLE SEDIMENT BARRIER

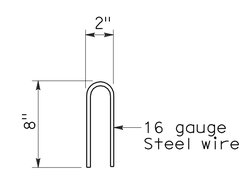

STAPLE DETAIL

STATE OF CALIFORNIA
DEPARTMENT OF TRANSPORTATION

TEMPORARY WATER POLLUTION CONTROL DETAILS (TEMPORARY DRAINAGE INLET PROTECTION)

NO SCALE

NSP T63 DATED AUGUST 15, 2008 SUPPLEMENTS THE STANDARD PLANS BOOK DATED MAY 2006.

NEW STANDARD PLAN NSP T63

2006 NEW STANDARD PLAN NSP T63

DIST	COUNTY	ROUTE	POST MILES TOTAL PROJECT	SHEET NO.	TOTAL SHEETS
01	Men	162	20.0/21.2	38	39

LICENSED LANDSCAPE ARCHITECT

August 15, 2008
PLANS APPROVAL DATE

LICENSED LANDSCAPE ARCHITECT
Robert B. Schott 3625
Signature
11-04-08
Renewal Date
08-11-08
Date
STATE OF CALIFORNIA

The State of California or its officers or agents shall not be responsible for the accuracy or completeness of electronic copies of this plan sheet.

To accompany plans dated 10-12-09

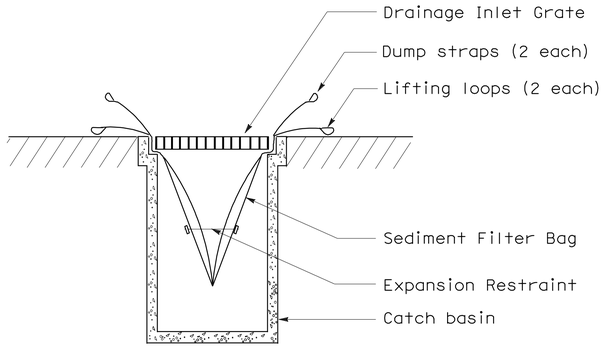

SECTION B-B

SEDIMENT FILTER BAG DETAIL

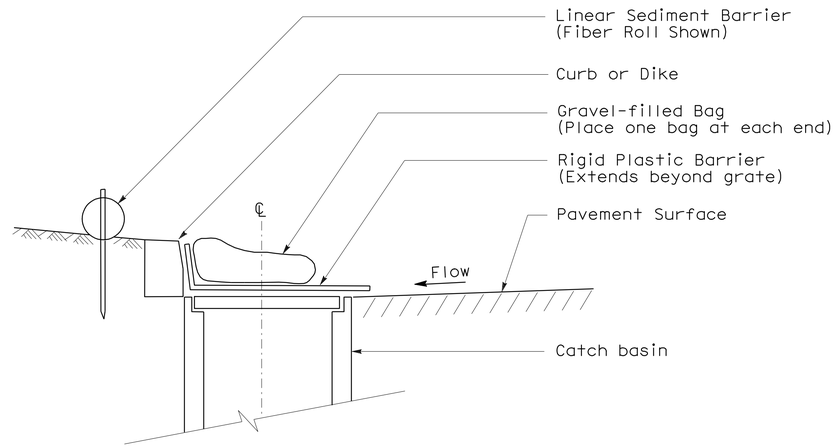

SECTION

TEMPORARY DRAINAGE INLET PROTECTION (TYPE 6A) (CATCH BASIN WITH GRATE)

NOTES:

1. See Standard Plan T51 for Temporary Silt Fence.
2. Dimensions may vary to fit field conditions.

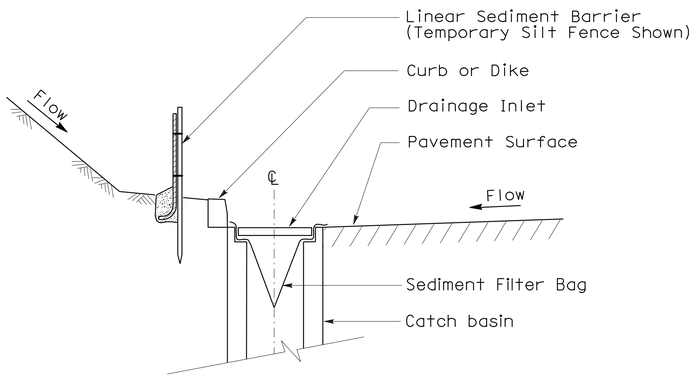

SECTION A-A

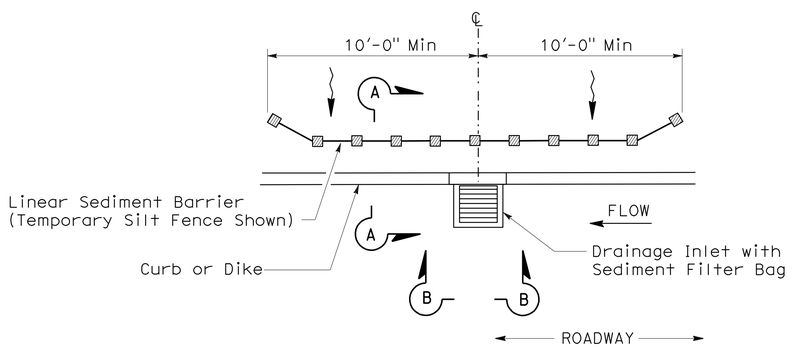

PLAN

TEMPORARY DRAINAGE INLET PROTECTION (TYPE 5) (SEDIMENT FILTER BAG)

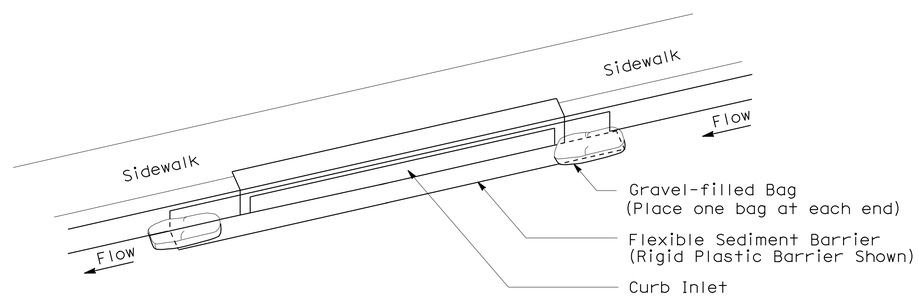

PERSPECTIVE

TEMPORARY DRAINAGE INLET PROTECTION (TYPE 6B) (CURB INLET WITHOUT GRATE)

STATE OF CALIFORNIA
DEPARTMENT OF TRANSPORTATION

TEMPORARY WATER POLLUTION CONTROL DETAILS (TEMPORARY DRAINAGE INLET PROTECTION)

NO SCALE

NSP T64 DATED AUGUST 15, 2008 SUPPLEMENTS
THE STANDARD PLANS BOOK DATED MAY 2006.

NEW STANDARD PLAN NSP T64

2006 NEW STANDARD PLAN NSP T64

7-11-08

DIST	COUNTY	ROUTE	POST MILES TOTAL PROJECT	SHEET NO.	TOTAL SHEETS
01	Men	162	20.0/21.2	39	39

LICENSED LANDSCAPE ARCHITECT

April 3, 2009
PLANS APPROVAL DATE

LICENSED LANDSCAPE ARCHITECT
Robert B. Schott 3625
Signature
11-30-10
Renewal Date
2-25-09
Date
STATE OF CALIFORNIA

The State of California or its officers or agents shall not be responsible for the accuracy or completeness of electronic copies of this plan sheet.

To accompany plans dated 10-12-09

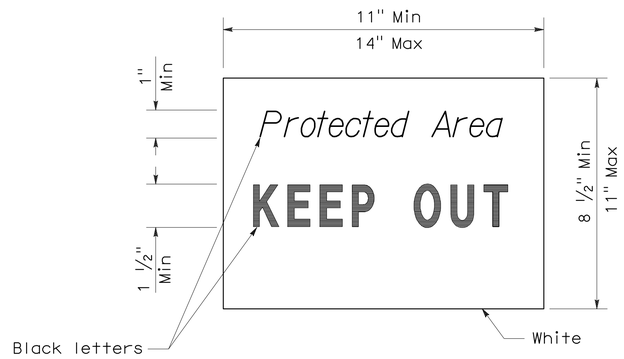

SIGN DETAIL

NOTE:

1. Temporary silt fence and temporary straw bale barrier shown for reference purposes only.

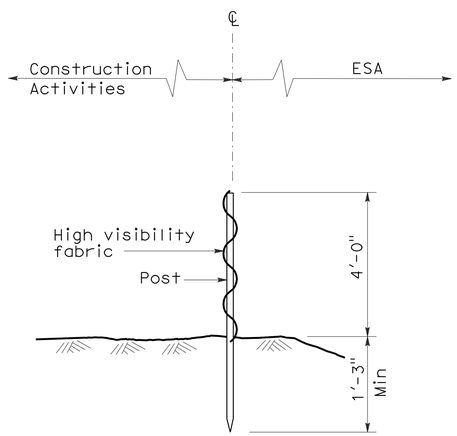

SECTION
TEMPORARY FENCE (TYPE ESA)

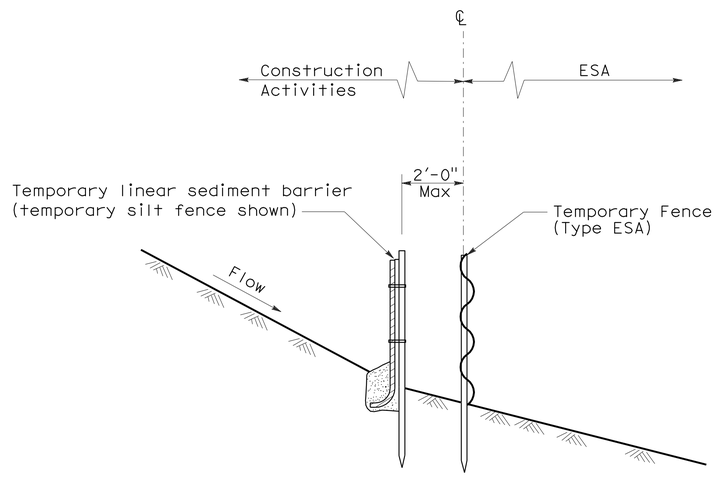

SECTION
PLACEMENT DETAIL
FOR TEMPORARY LINEAR SEDIMENT BARRIER
USED WITH TEMPORARY
FENCE (TYPE ESA)
(See Note 1)

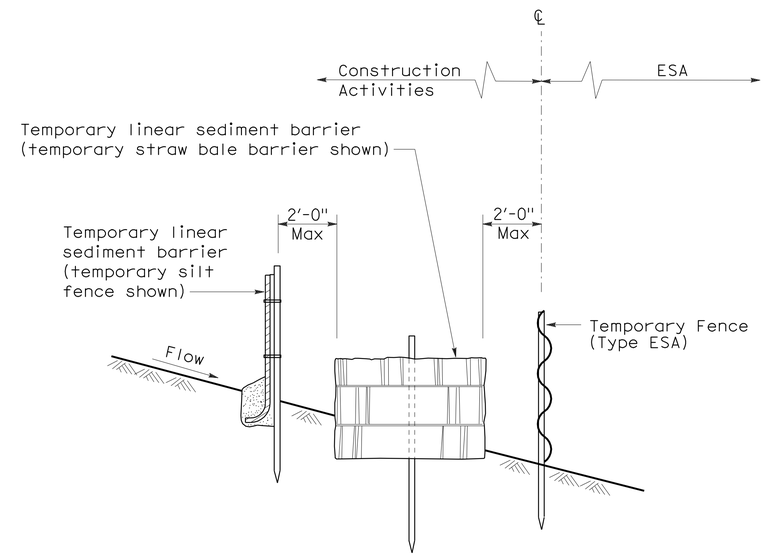

SECTION
PLACEMENT DETAIL
FOR TEMPORARY SILT FENCE
AND TEMPORARY STRAW BALE BARRIER
USED WITH TEMPORARY FENCE (TYPE ESA)
(See Note 1)

STATE OF CALIFORNIA
DEPARTMENT OF TRANSPORTATION

TEMPORARY WATER POLLUTION CONTROL DETAILS [TEMPORARY FENCE (TYPE ESA)]

NO SCALE

NSP T65 DATED APRIL 3, 2009 SUPPLEMENTS
THE STANDARD PLANS BOOK DATED MAY 2006.

NEW STANDARD PLAN NSP T65

2006 NEW STANDARD PLAN NSP T65