ER-43K4(004)E

Dist	COUNTY	ROUTE	POST MILES TOTAL PROJECT	SHEET No.	TOTAL SHEETS
01	Hum	96	26.9/R41.1	1	53

STATE OF CALIFORNIA

DEPARTMENT OF TRANSPORTATION

PROJECT PLANS FOR CONSTRUCTION ON STATE HIGHWAY

IN HUMBOLDT COUNTY AT VARIOUS LOCATIONS FROM 0.7 MILE WEST OF BLUFF CREEK ROAD TO 4.0 MILES WEST OF THE HUMBOLDT/SISKIYOU COUNTY LINE

TO BE SUPPLEMENTED BY STANDARD PLANS DATED MAY 2006

INDEX OF PLANS

SHEET No.	DESCRIPTION
1	TITLE AND LOCATION MAP
2-4	TYPICAL CROSS SECTIONS
5-14	LAYOUTS
15-19	PROFILES AND SUPERELEVATION DIAGRAMS
20	CONSTRUCTION DETAILS
21-33	DRAINAGE PLANS, PROFILES, DETAILS AND QUANTITIES
34	CONSTRUCTION AREA SIGNS
35-40	PAVEMENT DELINEATION PLANS AND QUANTITIES
41	SUMMARY OF QUANTITIES
42-53	REVISED AND NEW STANDARD PLANS

THE STANDARD PLANS LIST APPLICABLE TO THIS CONTRACT IS INCLUDED IN THE NOTICE TO BIDDERS AND SPECIAL PROVISIONS BOOK.

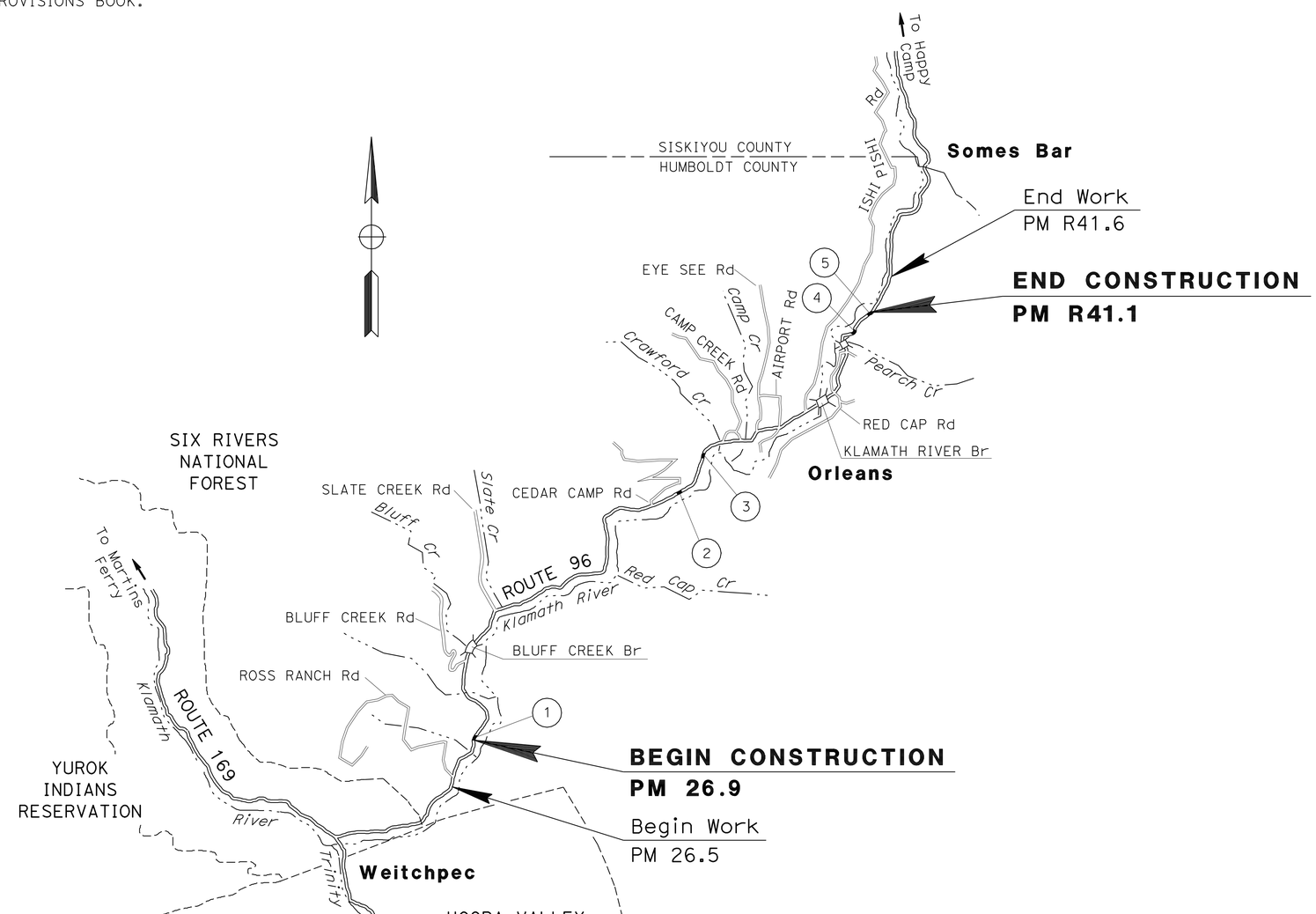

LOCATIONS OF CONSTRUCTION

Loc No.	COUNTY	ROUTE	POST MILE FROM	POST MILE TO
1	Hum	96	26.95	27.30
2	Hum	96	35.12	35.40
3	Hum	96	35.85	36.10
4	Hum	96	R40.76	R40.85
5	Hum	96	R40.97	R41.05

THE CONTRACTOR SHALL POSSESS THE CLASS (OR CLASSES) OF LICENSE AS SPECIFIED IN THE "NOTICE TO BIDDERS."

PROJECT MANAGER: FRANK DEMLING

DESIGN ENGINEER: L.R.ASHLEY

Talitha J. Stimson 03/18/09
PROJECT ENGINEER DATE
REGISTERED CIVIL ENGINEER

September 21, 2009
PLANS APPROVAL DATE

REGISTERED PROFESSIONAL ENGINEER — TALITHA STIMSON — No. C 59258 — Exp. 6-30-11 — CIVIL — STATE OF CALIFORNIA

THE STATE OF CALIFORNIA OR ITS OFFICERS OR AGENTS SHALL NOT BE RESPONSIBLE FOR THE ACCURACY OR COMPLETENESS OF SCANNED COPIES OF THIS PLAN SHEET.

LAST REVISION 03-18-09 DATE PLOTTED => 04-MAY-2010 TIME PLOTTED => 08:01

CONTRACT No. 01-472304

Dist	COUNTY	ROUTE	POST MILES TOTAL PROJECT	SHEET No.	TOTAL SHEETS
01	Hum	96	26.9/R41.1	2	53

REGISTERED CIVIL ENGINEER — 03/18/09 DATE

9-21-09
PLANS APPROVAL DATE

REGISTERED PROFESSIONAL ENGINEER — TALITHA STIMSON — No. C 59258 — Exp. 6-30-11 — CIVIL — STATE OF CALIFORNIA

THE STATE OF CALIFORNIA OR ITS OFFICERS OR AGENTS SHALL NOT BE RESPONSIBLE FOR THE ACCURACY OR COMPLETENESS OF SCANNED COPIES OF THIS PLAN SHEET.

NOTES:

1. DIMENSIONS OF THE PAVEMENT STRUCTURES (STRUCTURAL SECTIONS) ARE SUBJECT TO TOLERANCES SPECIFIED IN THE STANDARD SPECIFICATIONS.
2. SUPERELEVATIONS ARE SHOWN ON THE SUPERELEVATION DIAGRAMS.
3. SEE SHEET C-1 FOR STRUCTURAL SECTION REINFORCING DETAIL.

LEGEND

SR = SUPERELEVATION RATE

DESIGN DESIGNATION (ROUTE 96)

	PM 26.95/27.3	PM 35.16/36.1	PM R40.8/R44.09	
(2009) ADT	490	410	420	D = 60%
(2029) ADT	540	450	460	H = 8%
(2009) DHV	50	50	70	V = 40 mph
(2029) DHV	60	60	80	

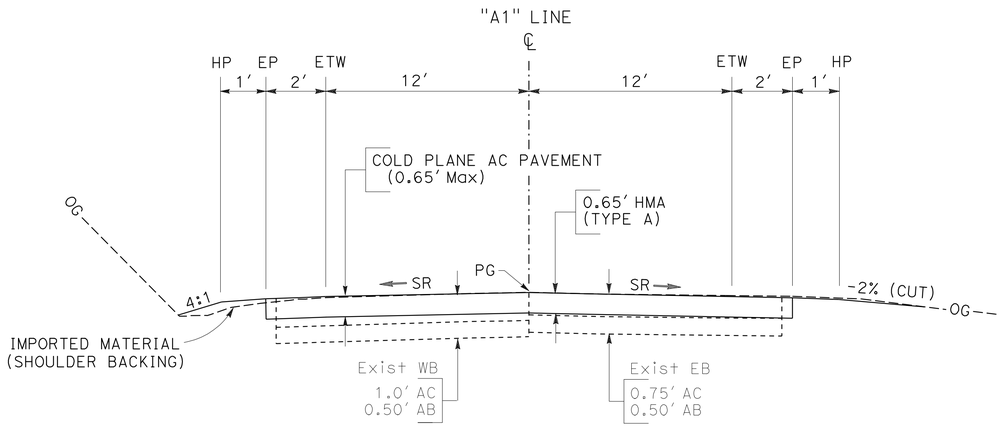

LOCATION 1

Sta "A1" 22+00 TO Sta "A1" 23+60

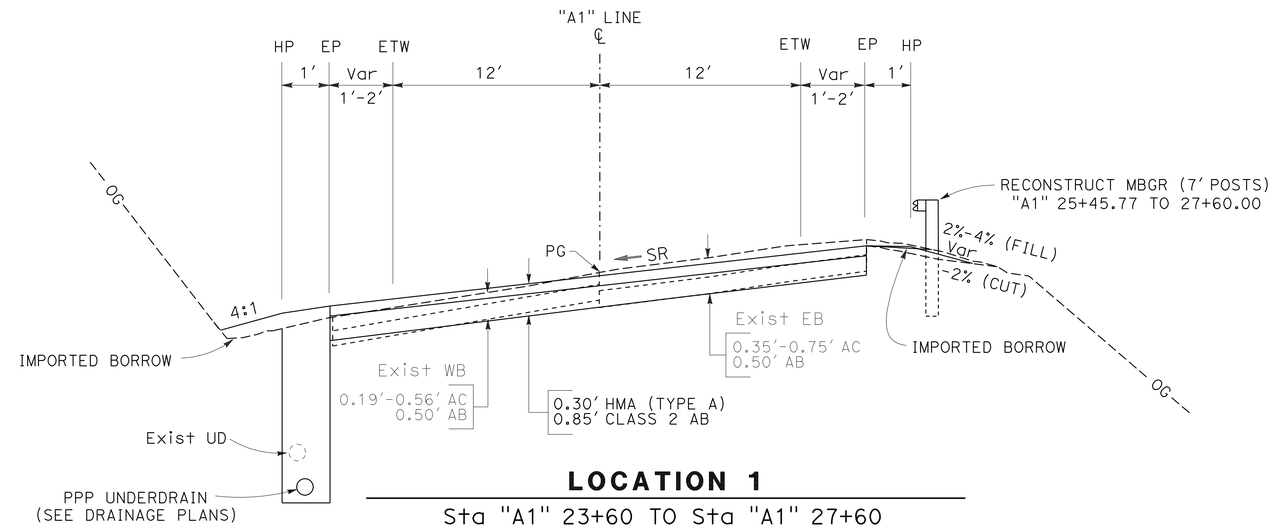

LOCATION 1

Sta "A1" 23+60 TO Sta "A1" 27+60

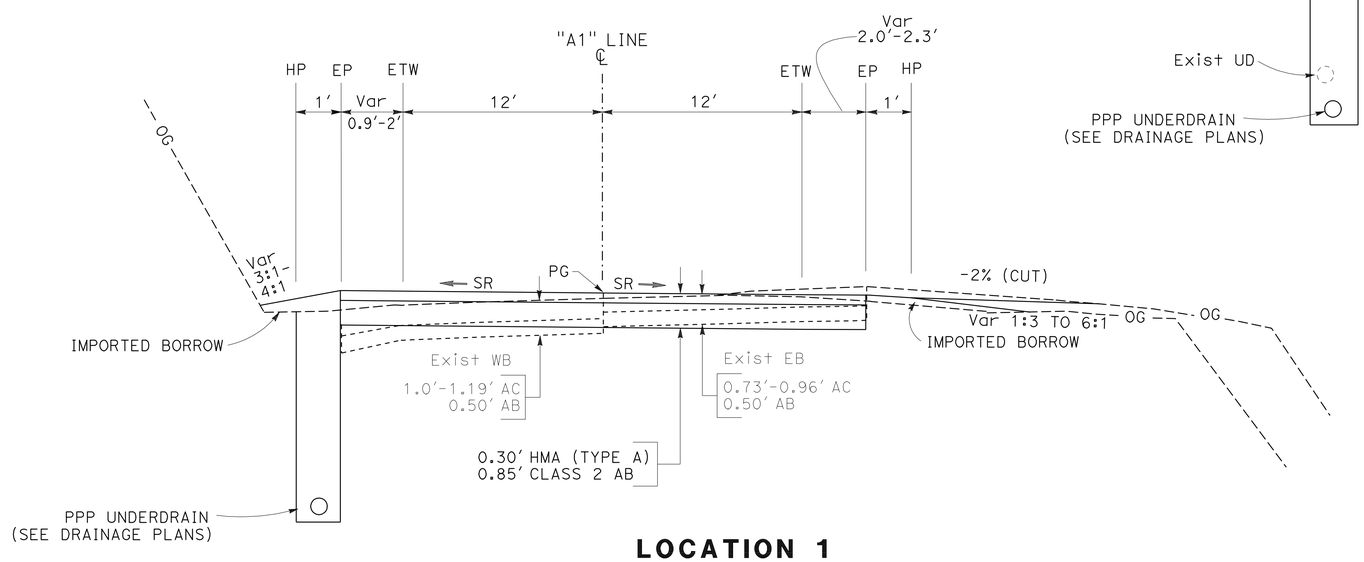

LOCATION 1

Sta "A1" 12+40 TO Sta "A1" 22+00

TYPICAL CROSS SECTIONS

NO SCALE

X-1

REVISED BY | DATE REVISED
BIJAN SAMRAD | TALITHA STIMSON
CALCULATED-DESIGNED BY | CHECKED BY
FUNCTIONAL SUPERVISOR | L.R.ASHLEY

STATE OF CALIFORNIA - DEPARTMENT OF TRANSPORTATION
Caltrans®
DESIGN

\\SV01S01\PSESUBMITX01_472301\147230ca001.dgn

LAST REVISION 03-18-09 | DATE PLOTTED => 25-SEP-2009 | TIME PLOTTED => 06:22

Dist	COUNTY	ROUTE	POST MILES TOTAL PROJECT	SHEET No.	TOTAL SHEETS
01	Hum	96	26.9/R41.1	3	53

REGISTERED CIVIL ENGINEER 03/18/09 DATE

9-21-09
PLANS APPROVAL DATE

REGISTERED PROFESSIONAL ENGINEER TALITHA STIMSON No. C 59258 Exp. 6-30-11 CIVIL STATE OF CALIFORNIA

THE STATE OF CALIFORNIA OR ITS OFFICERS OR AGENTS SHALL NOT BE RESPONSIBLE FOR THE ACCURACY OR COMPLETENESS OF SCANNED COPIES OF THIS PLAN SHEET.

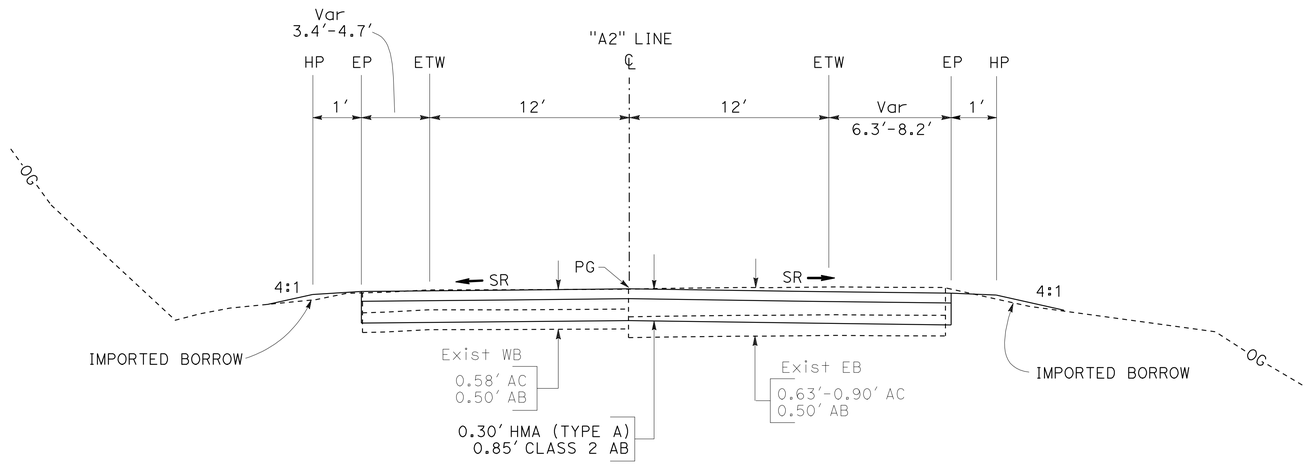

LOCATION 2

Sta "A2" 21+00 TO Sta "A2" 22+60

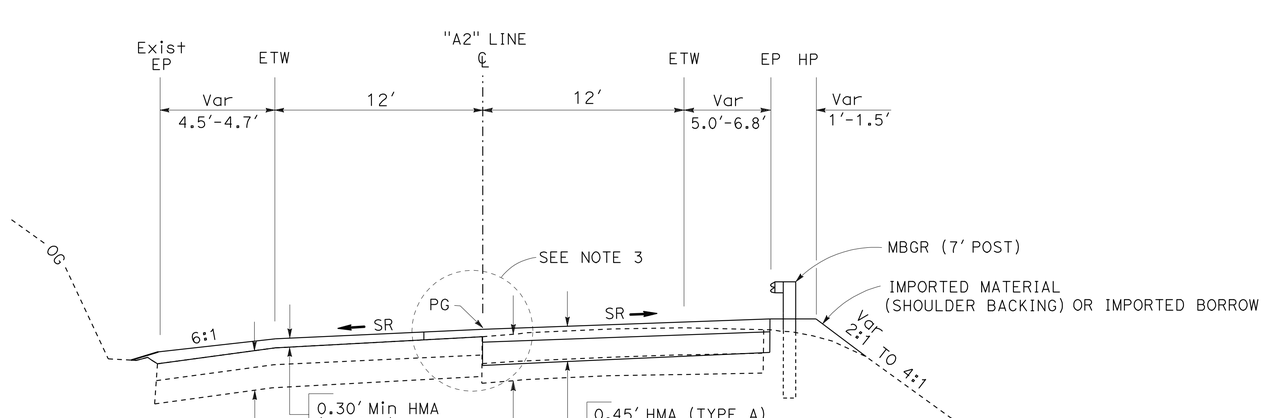

LOCATION 2

Sta "A2" 11+40 TO Sta "A2" 12+40

TYPICAL CROSS SECTIONS

NO SCALE

X-2

REVISED BY | DATE REVISED

BIJAN SAMRAD | TALITHA STIMSON

CALCULATED-DESIGNED BY | CHECKED BY

FUNCTIONAL SUPERVISOR: L.R.ASHLEY

STATE OF CALIFORNIA - DEPARTMENT OF TRANSPORTATION

Caltrans® DESIGN

\\SV01S01\PSESUBMIT\01_472301\147230ca002.dgn

LAST REVISION 03-18-09 | DATE PLOTTED => 25-SEP-2009 | TIME PLOTTED => 06:22

BORDER LAST REVISED 4/11/2008 | RELATIVE BORDER SCALE IS IN INCHES 0 1 2 3 | USERNAME => trmikesl | DGN FILE => 147230ca002.dgn | CU 03232 | EA 472301

Dist	COUNTY	ROUTE	POST MILES TOTAL PROJECT	SHEET No.	TOTAL SHEETS
01	Hum	96	26.9/R41.1	4	53

REGISTERED CIVIL ENGINEER 03/18/09 DATE

9-21-09
PLANS APPROVAL DATE

REGISTERED PROFESSIONAL ENGINEER TALITHA STIMSON No. C 59258 Exp. 6-30-11 CIVIL STATE OF CALIFORNIA

THE STATE OF CALIFORNIA OR ITS OFFICERS OR AGENTS SHALL NOT BE RESPONSIBLE FOR THE ACCURACY OR COMPLETENESS OF SCANNED COPIES OF THIS PLAN SHEET.

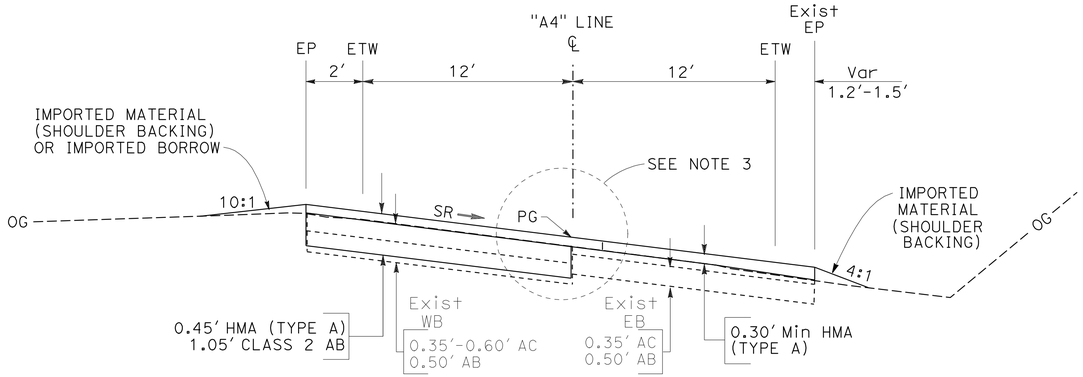

LOCATION 4

Sta "A4" 10+40 TO Sta "A4" 11+40

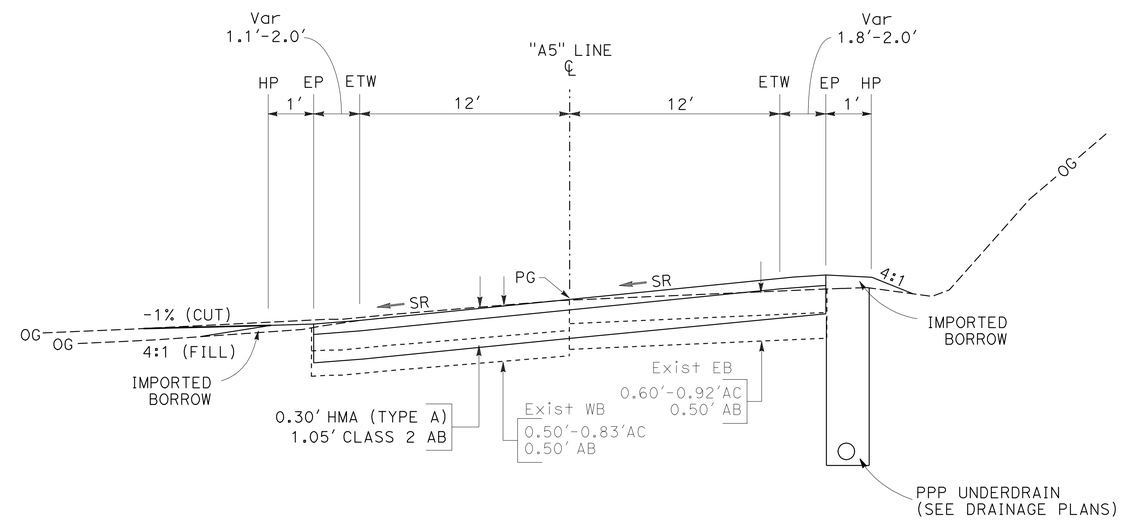

LOCATION 5

Sta "A5" 12+40 TO Sta "A5" 16+60

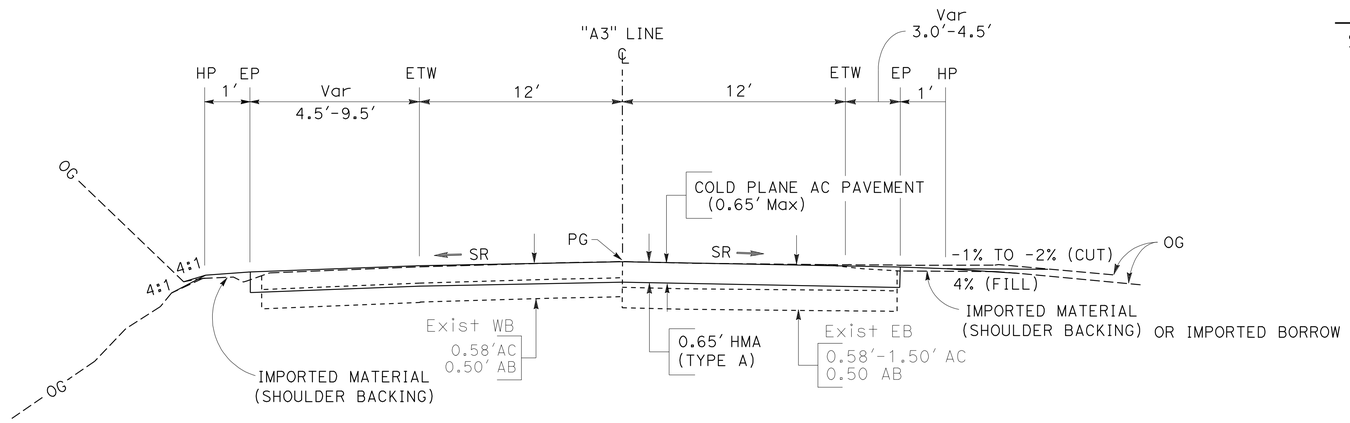

LOCATION 3

Sta "A3" 15+00 TO Sta "A3" 20+10

TYPICAL CROSS SECTIONS

NO SCALE

X-3

REVISED BY | DATE REVISED
BIJAN SAMRAD | TALITHA STIMSON
CALCULATED-DESIGNED BY | CHECKED BY
FUNCTIONAL SUPERVISOR
L.R.ASHLEY

STATE OF CALIFORNIA - DEPARTMENT OF TRANSPORTATION
Caltrans
DESIGN

\\SV01S01\PSESUBMIT\01_472301\147230ca003.dgn

LAST REVISION | DATE PLOTTED => 25-SEP-2009
03-18-09 | TIME PLOTTED => 06:22

Dist	COUNTY	ROUTE	POST MILES TOTAL PROJECT	SHEET No.	TOTAL SHEETS
01	Hum	96	26.9/R41.1	5	53

REGISTERED CIVIL ENGINEER 03/18/09 DATE

9-21-09
PLANS APPROVAL DATE

REGISTERED PROFESSIONAL ENGINEER TALITHA STIMSON No. C 59258 Exp. 6-30-11 CIVIL STATE OF CALIFORNIA

THE STATE OF CALIFORNIA OR ITS OFFICERS OR AGENTS SHALL NOT BE RESPONSIBLE FOR THE ACCURACY OR COMPLETENESS OF SCANNED COPIES OF THIS PLAN SHEET.

NOTES:

1. FOR COMPLETE RIGHT OF WAY DATA, SEE RIGHT OF WAY RECORD MAPS AT DISTRICT OFFICE.
2. UNLESS OTHERWISE SPECIFIED, R/W IS ASSUMED AS PRESCRIPTIVE ON USFS PROPERTY.
3. COORDINATE VALUES SHOWN ARE CCS 83, ZONE 1, NAVD 88.

CURVE DATA

No.	R	Δ	T	L	N	E
1	1200.13′	9°32′06"	100.09′	199.72′	2331651.2882	6105999.5419

LEGEND:

- TEMPORARY CONSTRUCTION EASEMENT (TCE)
- TFESA — TEMPORARY FENCE (TYPE ESA)
- ESA — ENVIRONMENTALLY SENSITIVE AREA
- TFR — TEMPORARY FIBER ROLL
- CD — TEMPORARY CHECK DAM
- TEMPORARY DRAINAGE INLET PROTECTION
- TSF — TEMPORARY SILT FENCE

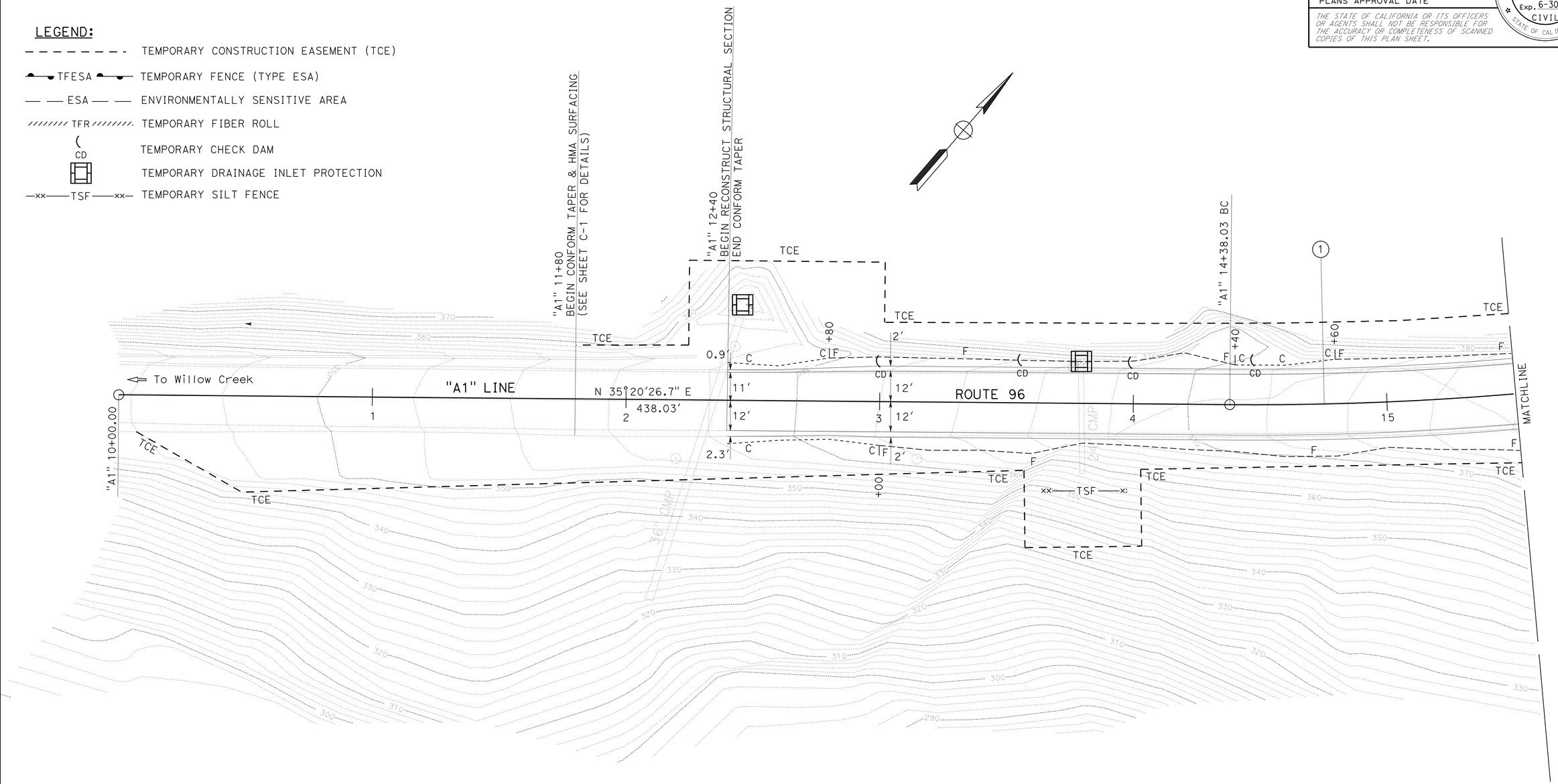

LOCATION 1

Klamath River

LAYOUT L-1

SCALE: 1′=20′

BIJAN SAMRAD | TALITHA STIMSON | L.R.ASHLEY | REVISED BY | DATE REVISED | CALCULATED-DESIGNED BY | CHECKED BY | FUNCTIONAL SUPERVISOR

STATE OF CALIFORNIA - DEPARTMENT OF TRANSPORTATION
Caltrans
DESIGN

\\SV01S01\PSESUBMITX01_472301\147230ea001.dgn

LAST REVISION 03-18-09 | DATE PLOTTED => 25-SEP-2009 | TIME PLOTTED => 06:22

BORDER LAST REVISED 4/11/2008 | RELATIVE BORDER SCALE IS IN INCHES 0 1 2 3 | USERNAME => trmikesl | DGN FILE => 147230ea001.dgn | CU 03232 | EA 472301

Dist	COUNTY	ROUTE	POST MILES TOTAL PROJECT	SHEET No.	TOTAL SHEETS
01	Hum	96	26.9/R41.1	6	53

REGISTERED CIVIL ENGINEER 03/18/09 DATE

9-21-09
PLANS APPROVAL DATE

REGISTERED PROFESSIONAL ENGINEER TALITHA STIMSON No. C 59258 Exp. 6-30-11 CIVIL STATE OF CALIFORNIA

THE STATE OF CALIFORNIA OR ITS OFFICERS OR AGENTS SHALL NOT BE RESPONSIBLE FOR THE ACCURACY OR COMPLETENESS OF SCANNED COPIES OF THIS PLAN SHEET.

NOTES:

1. FOR COMPLETE RIGHT OF WAY DATA, SEE RIGHT OF WAY RECORD MAPS AT DISTRICT OFFICE.
2. UNLESS OTHERWISE SPECIFIED, R/W IS ASSUMED AS PRESCRIPTIVE ON USFS PROPERTY.
3. COORDINATE VALUES SHOWN ARE CCS 83, ZONE 1, NAVD 88.

CURVE DATA

No.	R	Δ	T	L	N	E
1	1200.13′	9°32′06"	100.09′	199.72′	2331651.2882	6105999.5419
2	1600.10′	9°20′11"	130.66′	260.74′	2330563.9501	6108583.9251

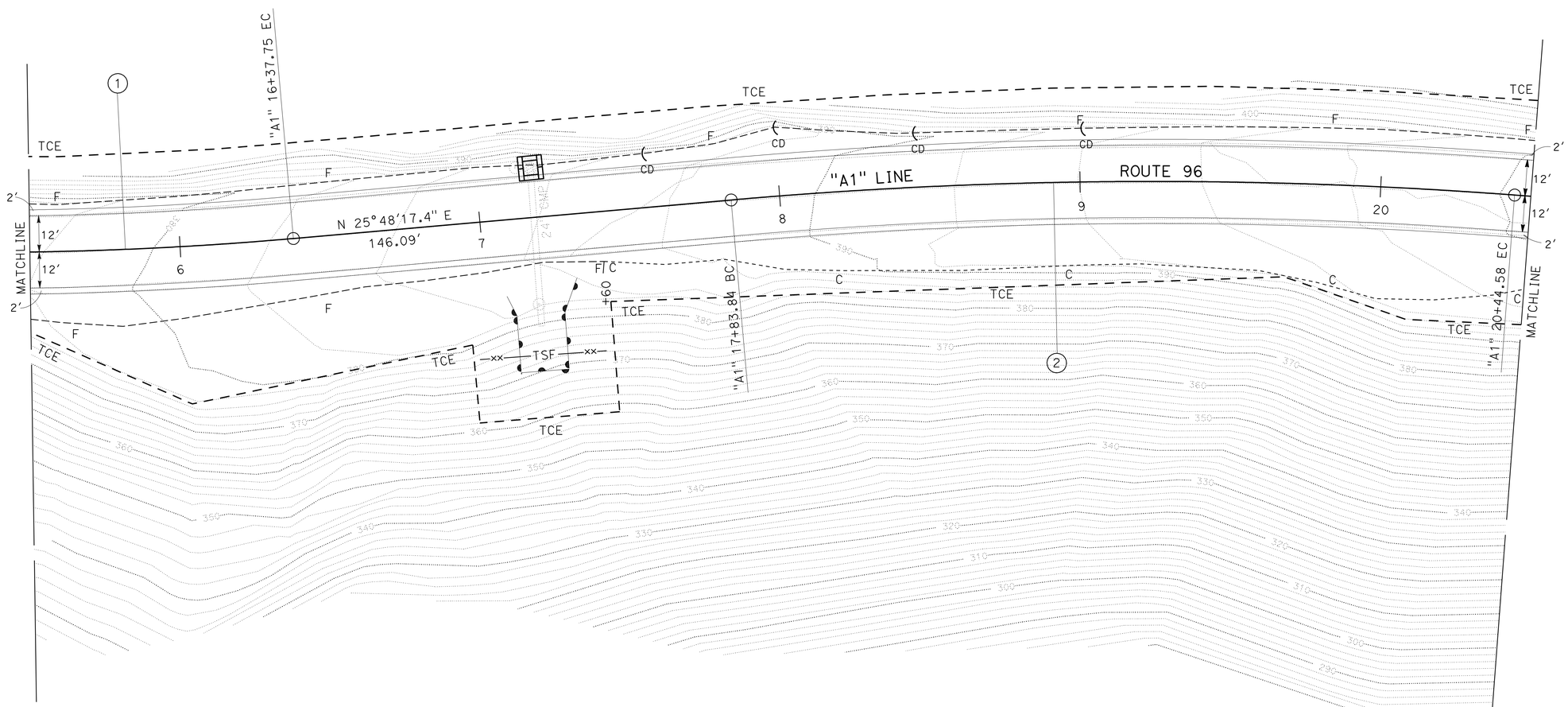

LOCATION 1

Klamath River

SCALE: 1′=20′

LAYOUT L-2

REVISED BY | DATE REVISED

BIJAN SAMRAD | TALITHA STIMSON

CALCULATED-DESIGNED BY | CHECKED BY

FUNCTIONAL SUPERVISOR: L.R.ASHLEY

STATE OF CALIFORNIA - DEPARTMENT OF TRANSPORTATION

Caltrans® DESIGN

\\SV01S01\PSESUBMIT\01_472301\147230ea002.dgn

LAST REVISION 03-18-09 | DATE PLOTTED => 25-SEP-2009 TIME PLOTTED => 06:23

Dist	COUNTY	ROUTE	POST MILES TOTAL PROJECT	SHEET No.	TOTAL SHEETS
01	Hum	96	26.9/R41.1	7	53

REGISTERED CIVIL ENGINEER — DATE 03/18/09

9-21-09
PLANS APPROVAL DATE

REGISTERED PROFESSIONAL ENGINEER TALITHA STIMSON No. C 59258 Exp. 6-30-11 CIVIL STATE OF CALIFORNIA

THE STATE OF CALIFORNIA OR ITS OFFICERS OR AGENTS SHALL NOT BE RESPONSIBLE FOR THE ACCURACY OR COMPLETENESS OF SCANNED COPIES OF THIS PLAN SHEET.

NOTES:

1. FOR COMPLETE RIGHT OF WAY DATA, SEE RIGHT OF WAY RECORD MAPS AT DISTRICT OFFICE.
2. UNLESS OTHERWISE SPECIFIED, R/W IS ASSUMED AS PRESCRIPTIVE ON USFS PROPERTY.
3. COORDINATE VALUES SHOWN ARE CCS 83, ZONE 1, NAVD 88.

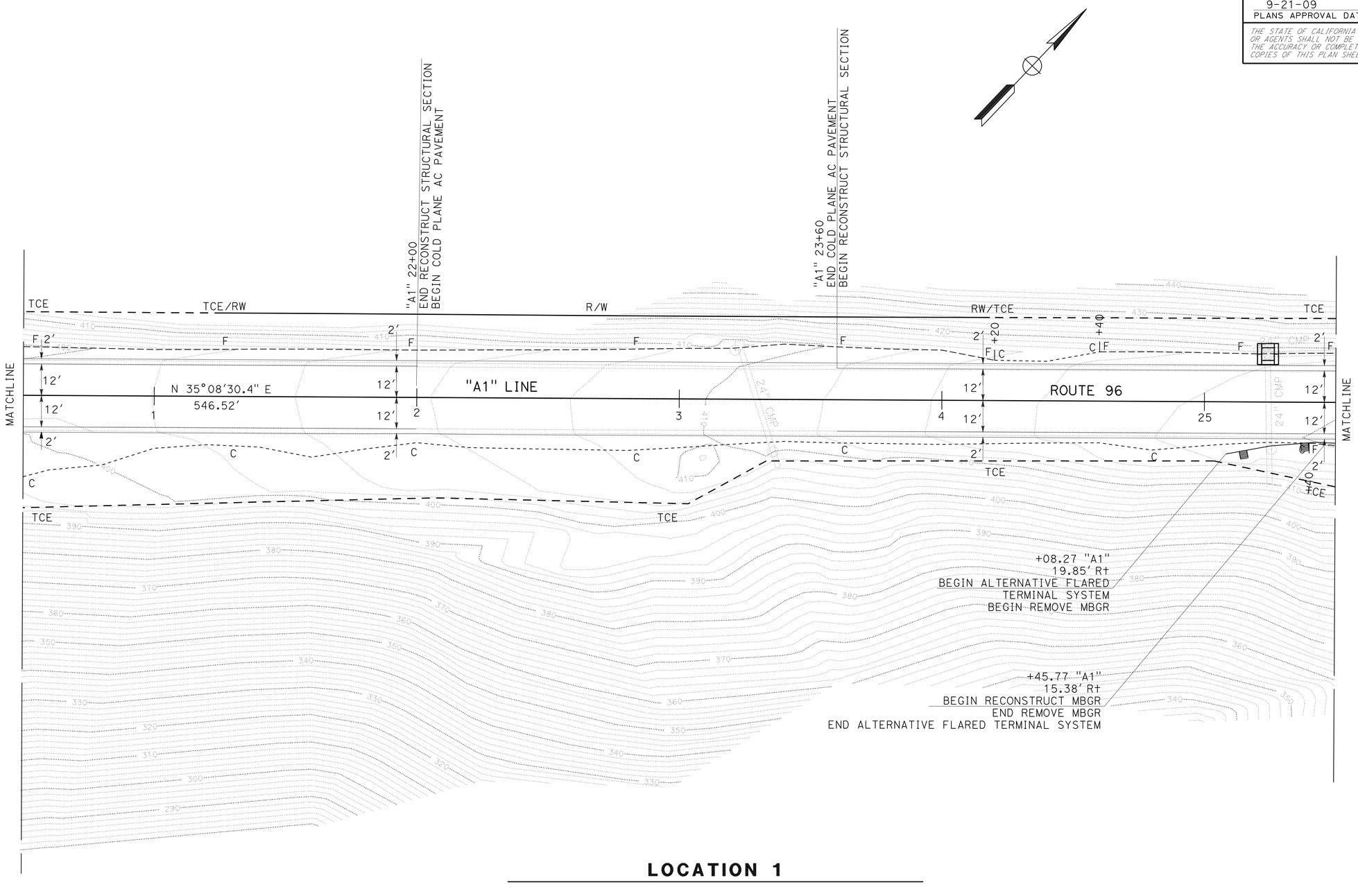

LOCATION 1

← Klamath River ←

SCALE: 1"=20'

LAYOUT L-3

REVISED BY | DATE REVISED

BIJAN SAMRAD | TALITHA STIMSON

CALCULATED-DESIGNED BY | CHECKED BY

FUNCTIONAL SUPERVISOR: L.R.ASHLEY

STATE OF CALIFORNIA - DEPARTMENT OF TRANSPORTATION

Caltrans

DESIGN

\\SV01S01\PSESUBMIT\01_472301\147230ea003.dgn

LAST REVISION 03-18-09 | DATE PLOTTED => 25-SEP-2009 | TIME PLOTTED => 06:23

BORDER LAST REVISED 4/11/2008 | RELATIVE BORDER SCALE IS IN INCHES 0 1 2 3 | USERNAME => trmikes1 | DGN FILE => 147230ea003.dgn | CU 03232 | EA 472301

Dist	COUNTY	ROUTE	POST MILES TOTAL PROJECT	SHEET No.	TOTAL SHEETS
01	Hum	96	26.9/R41.1	8	53

REGISTERED CIVIL ENGINEER 03/18/09 DATE

9-21-09
PLANS APPROVAL DATE

REGISTERED PROFESSIONAL ENGINEER TALITHA STIMSON No. C 59258 Exp. 6-30-11 CIVIL STATE OF CALIFORNIA

THE STATE OF CALIFORNIA OR ITS OFFICERS OR AGENTS SHALL NOT BE RESPONSIBLE FOR THE ACCURACY OR COMPLETENESS OF SCANNED COPIES OF THIS PLAN SHEET.

NOTES:

1. FOR COMPLETE RIGHT OF WAY DATA, SEE RIGHT OF WAY RECORD MAPS AT DISTRICT OFFICE.
2. UNLESS OTHERWISE SPECIFIED, R/W IS ASSUMED AS PRESCRIPTIVE ON USFS PROPERTY.
3. COORDINATE VALUES SHOWN ARE CCS 83, ZONE 1, NAVD 88.

CURVE DATA

No.	R	Δ	T	L	N	E
3	950′	9°40′30″	80.40′	160.42′	2332478.6358	6106813.2878
4	420′	30°26′57″	114.30′	223.20′	2332252.1063	6107292.4398

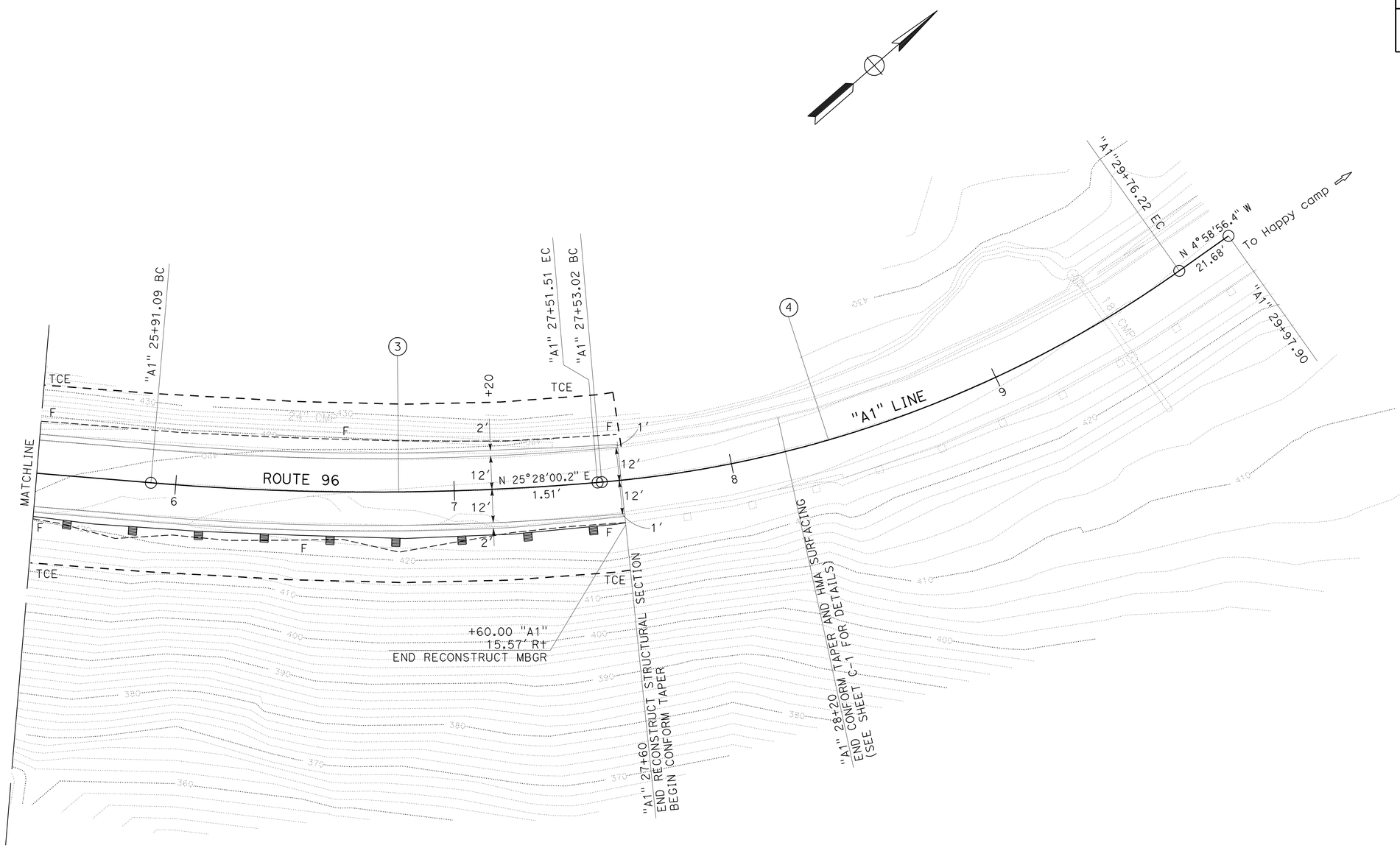

LOCATION 1

← Klamath River ←

SCALE: 1"=20′

LAYOUT L-4

REVISED BY | DATE REVISED
BIJAN SAMRAD | TALITHA STIMSON
CALCULATED-DESIGNED BY | CHECKED BY
FUNCTIONAL SUPERVISOR: L.R.ASHLEY

STATE OF CALIFORNIA - DEPARTMENT OF TRANSPORTATION
Caltrans®
DESIGN

\\SV01S01\PSESUBMIT\01_472301\147230ea004.dgn

LAST REVISION 03-18-09 | DATE PLOTTED => 25-SEP-2009 | TIME PLOTTED => 06:23

BORDER LAST REVISED 4/11/2008 | RELATIVE BORDER SCALE IS IN INCHES 0 1 2 3 | USERNAME => trmikesl | DGN FILE => 147230ea004.dgn | CU 03232 | EA 472301

Dist	COUNTY	ROUTE	POST MILES TOTAL PROJECT	SHEET No.	TOTAL SHEETS
01	Hum	96	26.9/R41.1	9	53

REGISTERED CIVIL ENGINEER 03/18/09 DATE

9-21-09
PLANS APPROVAL DATE

REGISTERED PROFESSIONAL ENGINEER TALITHA STIMSON No. C 59258 Exp. 6-30-11 CIVIL STATE OF CALIFORNIA

THE STATE OF CALIFORNIA OR ITS OFFICERS OR AGENTS SHALL NOT BE RESPONSIBLE FOR THE ACCURACY OR COMPLETENESS OF SCANNED COPIES OF THIS PLAN SHEET.

NOTES:

1. FOR COMPLETE RIGHT OF WAY DATA, SEE RIGHT OF WAY RECORD MAPS AT DISTRICT OFFICE.
2. UNLESS OTHERWISE SPECIFIED, R/W IS ASSUMED AS PRESCRIPTIVE ON USFS PROPERTY.
3. COORDINATE VALUES SHOWN ARE CCS 83, ZONE 1, NAVD 88.

CURVE DATA

No.	R	Δ	T	L	N	E
5	1250′	16°23′44"	180.10′	357.74′	2354447.0441	6124964.1930

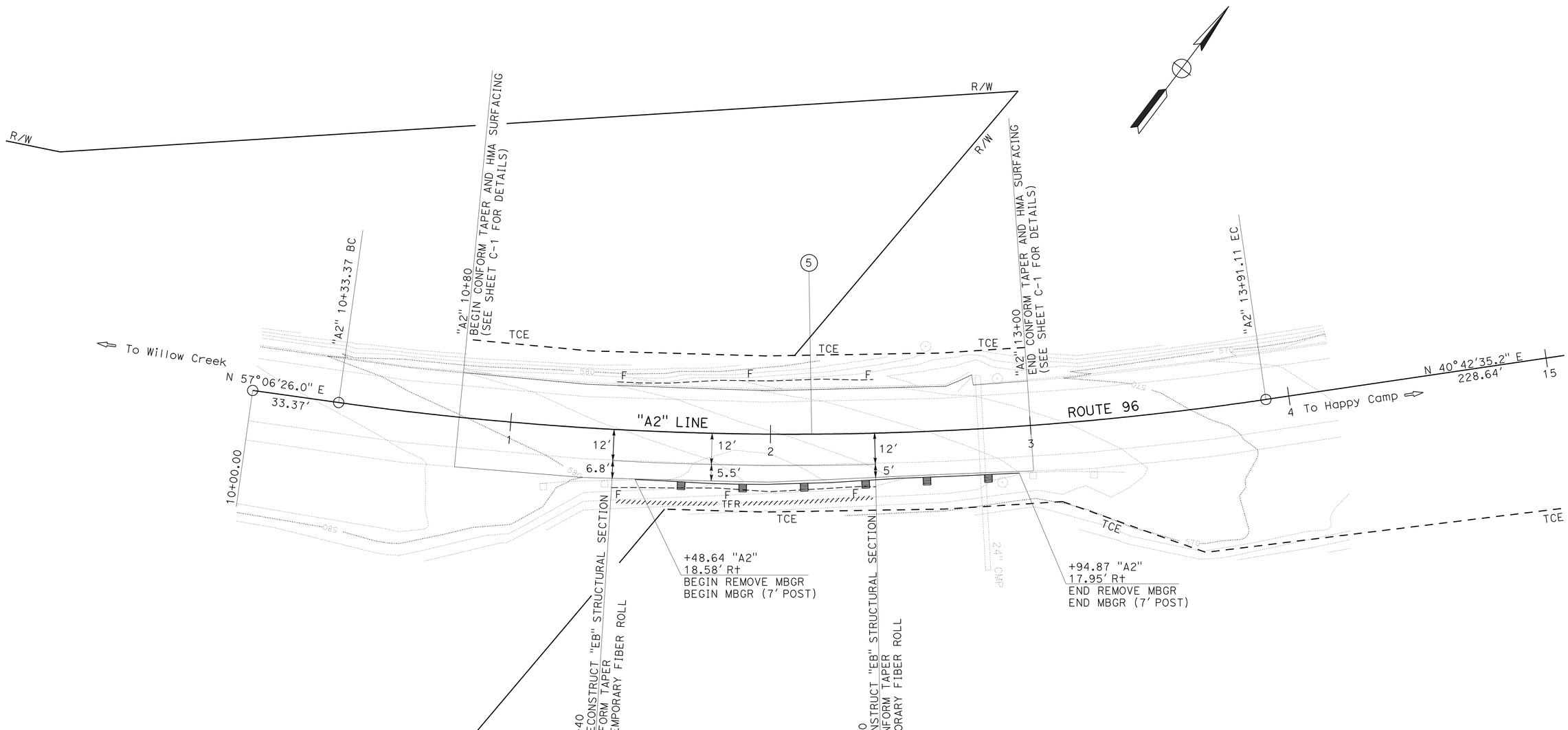

LOCATION 2

SCALE: 1"=20′

LAYOUT L-5

REVISED BY	DATE REVISED

CALCULATED-DESIGNED BY: BIJAN SAMRAD
CHECKED BY: TALITHA STIMSON
FUNCTIONAL SUPERVISOR: L.R.ASHLEY

STATE OF CALIFORNIA - DEPARTMENT OF TRANSPORTATION
Caltrans
DESIGN

\\SV01S01\PSESUBMITT\01_472301\147230ea005.dgn

LAST REVISION 03-18-09 | DATE PLOTTED => 25-SEP-2009 | TIME PLOTTED => 06:23

BORDER LAST REVISED 4/11/2008 | RELATIVE BORDER SCALE IS IN INCHES 0 1 2 3 | USERNAME => trmikesl | DGN FILE => 147230ea005.dgn | CU 03232 | EA 472301

Dist	COUNTY	ROUTE	POST MILES TOTAL PROJECT	SHEET No.	TOTAL SHEETS
01	Hum	96	26.9/R41.1	10	53

REGISTERED CIVIL ENGINEER 03/18/09 DATE

9-21-09
PLANS APPROVAL DATE

REGISTERED PROFESSIONAL ENGINEER TALITHA STIMSON No. C 59258 Exp. 6-30-11 CIVIL STATE OF CALIFORNIA

THE STATE OF CALIFORNIA OR ITS OFFICERS OR AGENTS SHALL NOT BE RESPONSIBLE FOR THE ACCURACY OR COMPLETENESS OF SCANNED COPIES OF THIS PLAN SHEET.

NOTES:

1. FOR COMPLETE RIGHT OF WAY DATA, SEE RIGHT OF WAY RECORD MAPS AT DISTRICT OFFICE.
2. UNLESS OTHERWISE SPECIFIED, R/W IS ASSUMED AS PRESCRIPTIVE ON USFS PROPERTY.
3. COORDINATE VALUES SHOWN ARE CCS 83, ZONE 1, NAVD 88.

CURVE DATA

No.	R	Δ	T	L	N	E
6	800.00′	30°37′46"	219.08′	427.67′	2353283.2927	6126667.2706
7	1100.03′	21°35′41"	209.79′	414.60′	2355160.0677	6126286.3291

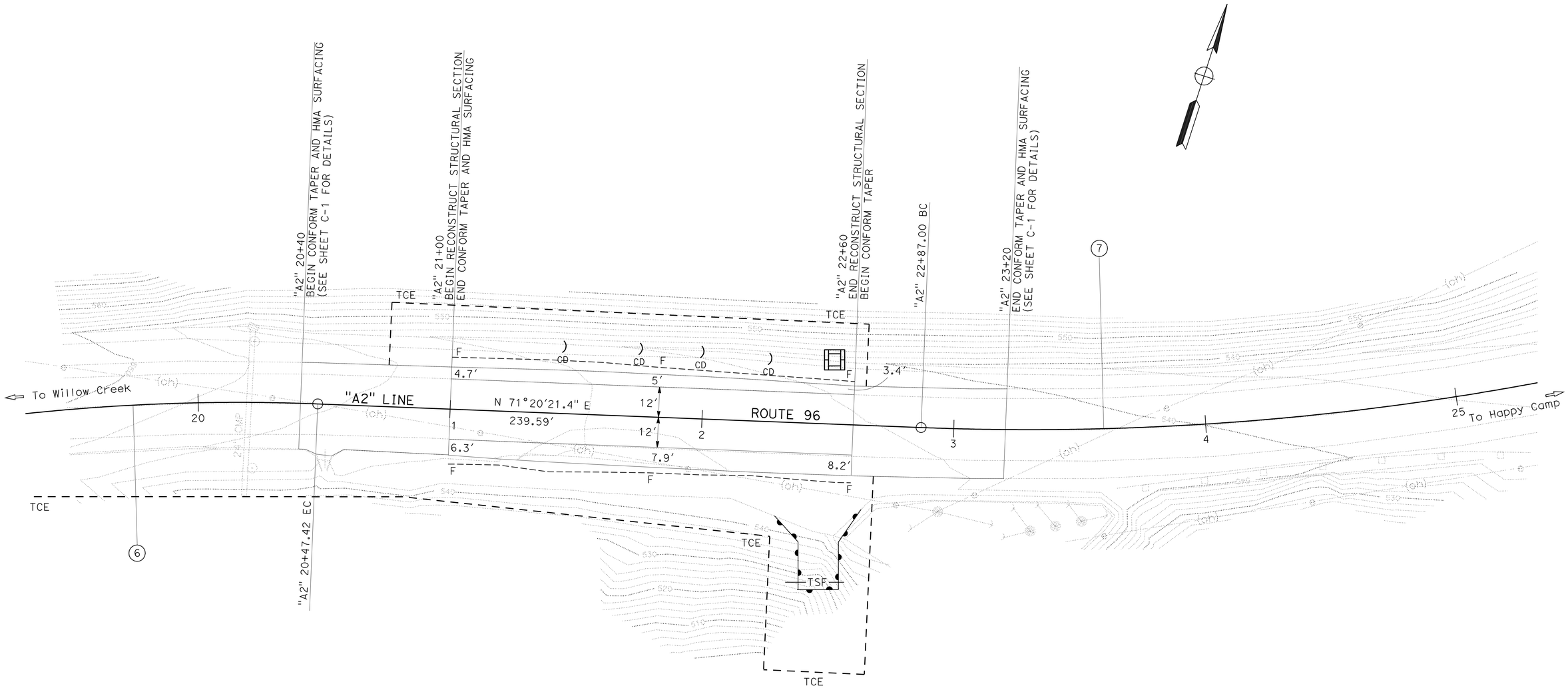

LOCATION 2

Klamath River

SCALE: 1"=20′

LAYOUT L-6

BIJAN SAMRAD
TALITHA STIMSON
L.R.ASHLEY
REVISED BY
DATE REVISED
CALCULATED-DESIGNED BY
CHECKED BY
FUNCTIONAL SUPERVISOR

STATE OF CALIFORNIA - DEPARTMENT OF TRANSPORTATION
DESIGN

\\SV01S01\PSESUBMIT\01_472301\147230ea006.dgn

LAST REVISION 03-18-09
DATE PLOTTED => 26-SEP-2009
TIME PLOTTED => 06:23

BORDER LAST REVISED 4/11/2008
RELATIVE BORDER SCALE IS IN INCHES 0 1 2 3
USERNAME => trmikesl
DGN FILE => 147230ea006.dgn
CU 03232
EA 472301

Dist	COUNTY	ROUTE	POST MILES TOTAL PROJECT	SHEET No.	TOTAL SHEETS
01	Hum	96	26.9/R41.1	11	53

REGISTERED CIVIL ENGINEER 03/18/09 DATE

9-21-09
PLANS APPROVAL DATE

REGISTERED PROFESSIONAL ENGINEER TALITHA STIMSON No. C 59258 Exp. 6-30-11 CIVIL STATE OF CALIFORNIA

THE STATE OF CALIFORNIA OR ITS OFFICERS OR AGENTS SHALL NOT BE RESPONSIBLE FOR THE ACCURACY OR COMPLETENESS OF SCANNED COPIES OF THIS PLAN SHEET.

NOTES:

1. FOR COMPLETE RIGHT OF WAY DATA, SEE RIGHT OF WAY RECORD MAPS AT DISTRICT OFFICE.
2. UNLESS OTHERWISE SPECIFIED, R/W IS ASSUMED AS PRESCRIPTIVE ON USFS PROPERTY.
3. COORDINATE VALUES SHOWN ARE CCS 83, ZONE 1, NAVD 88

CURVE DATA

No.	R	Δ	T	L	N	E
8	1100′	8°36′23"	82.77′	165.23′	2355980.2080	6128133.9367

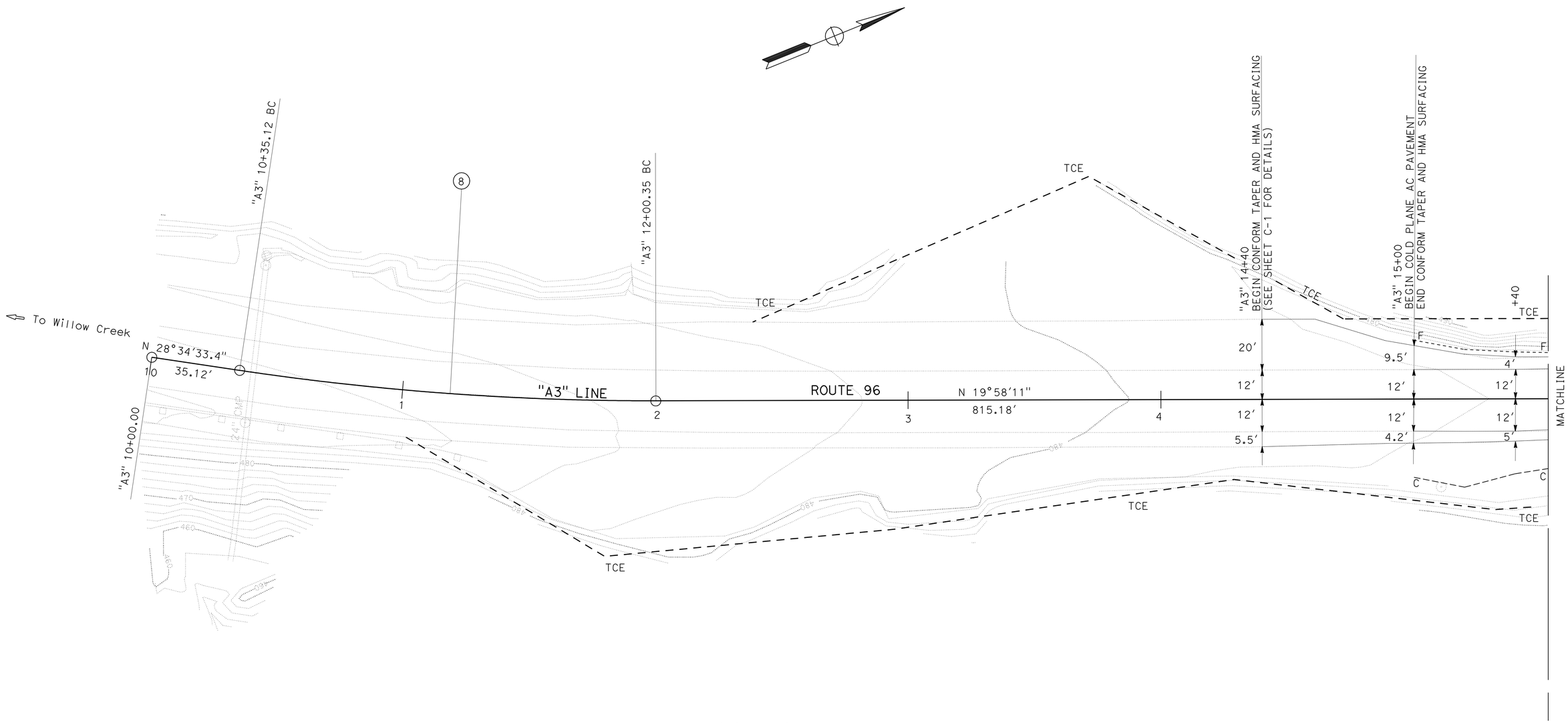

LOCATION 3

Klamath River

SCALE: 1"=20′

LAYOUT L-7

BIJAN SAMRAD | TALITHA STIMSON | L.R.ASHLEY | CALCULATED-DESIGNED BY | CHECKED BY | REVISED BY | DATE REVISED

STATE OF CALIFORNIA - DEPARTMENT OF TRANSPORTATION
Caltrans
DESIGN

\\SV01S01\PSESUBMIT\01_472301\147230ea007.dgn

LAST REVISION 03-18-09 | DATE PLOTTED => 25-SEP-2009 | TIME PLOTTED => 06:23

BORDER LAST REVISED 4/11/2008 | RELATIVE BORDER SCALE IS IN INCHES 0 1 2 3 | USERNAME => trmikesl | DGN FILE => 147230ea007.dgn | CU 03232 | EA 472301

Dist	COUNTY	ROUTE	POST MILES TOTAL PROJECT	SHEET No.	TOTAL SHEETS
01	Hum	96	26.9/R41.1	12	53

REGISTERED CIVIL ENGINEER 03/18/09 DATE

9-21-09
PLANS APPROVAL DATE

REGISTERED PROFESSIONAL ENGINEER TALITHA STIMSON No. C 59258 Exp. 6-30-11 CIVIL STATE OF CALIFORNIA

THE STATE OF CALIFORNIA OR ITS OFFICERS OR AGENTS SHALL NOT BE RESPONSIBLE FOR THE ACCURACY OR COMPLETENESS OF SCANNED COPIES OF THIS PLAN SHEET.

NOTES:

1. FOR COMPLETE RIGHT OF WAY DATA, SEE RIGHT OF WAY RECORD MAPS AT DISTRICT OFFICE.
2. UNLESS OTHERWISE SPECIFIED, R/W IS ASSUMED AS PRESCRIPTIVE ON USFS PROPERTY.
3. COORDINATE VALUES SHOWN ARE CCS 83, ZONE 1, NAVD 88

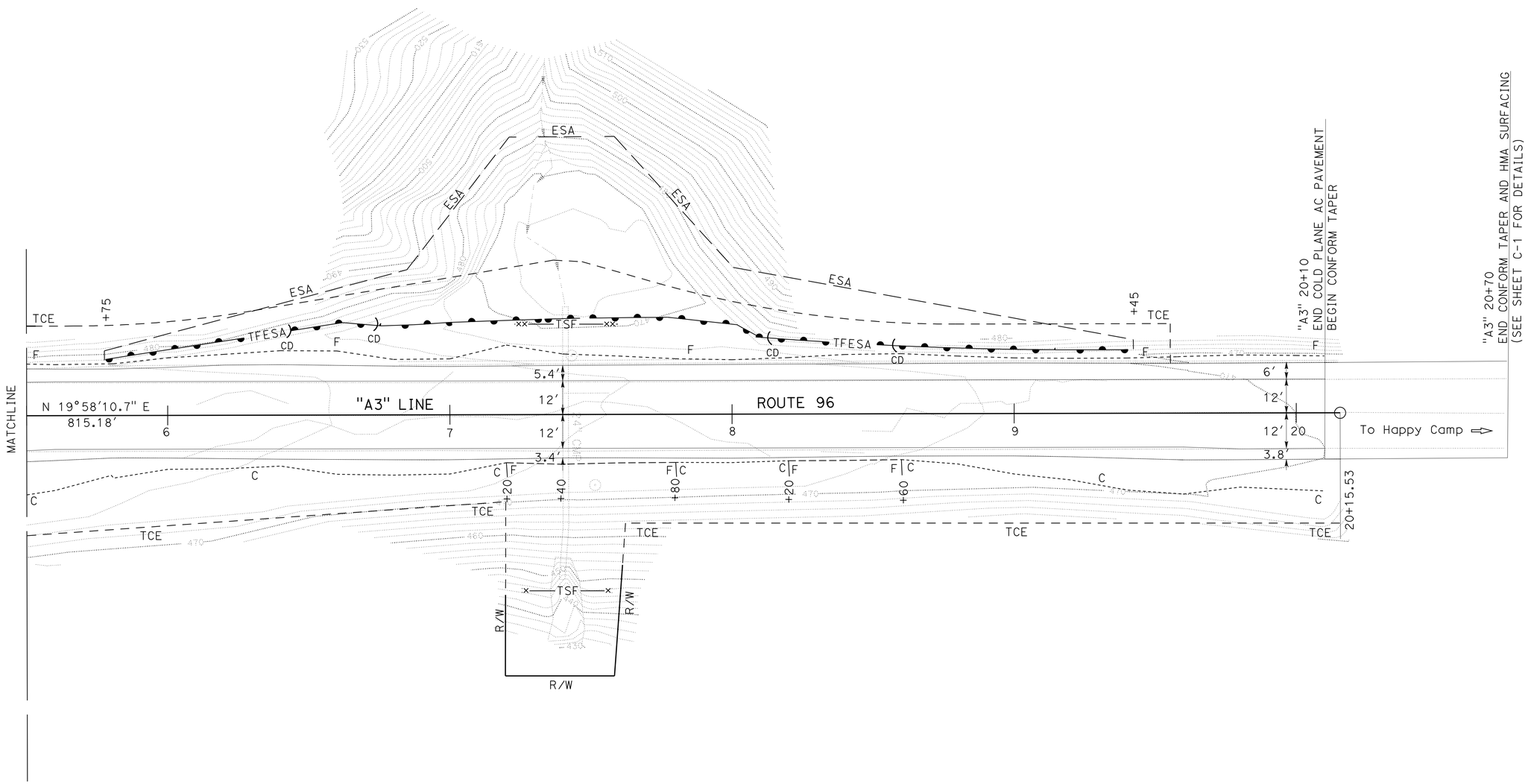

LOCATION 3

Klamath River

SCALE: 1"=20'

LAYOUT L-8

BIJAN SAMRAD
TALITHA STIMSON
L.R.ASHLEY
REVISED BY
DATE REVISED
CALCULATED-DESIGNED BY
CHECKED BY
FUNCTIONAL SUPERVISOR

STATE OF CALIFORNIA - DEPARTMENT OF TRANSPORTATION
DESIGN

LAST REVISION 03-18-09
DATE PLOTTED => 25-SEP-2009
TIME PLOTTED => 06:23

\\SV01S01\PSESUBMIT\01_472301\147230ea008.dgn

Dist	COUNTY	ROUTE	POST MILES TOTAL PROJECT	SHEET No.	TOTAL SHEETS
01	Hum	96	26.9/R41.1	13	53

REGISTERED CIVIL ENGINEER 03/18/09 DATE

9-21-09
PLANS APPROVAL DATE

REGISTERED PROFESSIONAL ENGINEER TALITHA STIMSON No. C 59258 Exp. 6-30-11 CIVIL STATE OF CALIFORNIA

THE STATE OF CALIFORNIA OR ITS OFFICERS OR AGENTS SHALL NOT BE RESPONSIBLE FOR THE ACCURACY OR COMPLETENESS OF SCANNED COPIES OF THIS PLAN SHEET.

NOTES:

1. FOR COMPLETE RIGHT OF WAY DATA, SEE RIGHT OF WAY RECORD MAPS AT DISTRICT OFFICE.
2. UNLESS OTHERWISE SPECIFIED, R/W IS ASSUMED AS PRESCRIPTIVE ON USFS PROPERTY.
3. COORDINATE VALUES SHOWN ARE CCS 83, ZONE 1, NAVD 88

CURVE DATA

No.	R	Δ	T	L	N	E
9	520′	26°19′33″	121.61′	238.92′	2369909.6238	6144738.9342

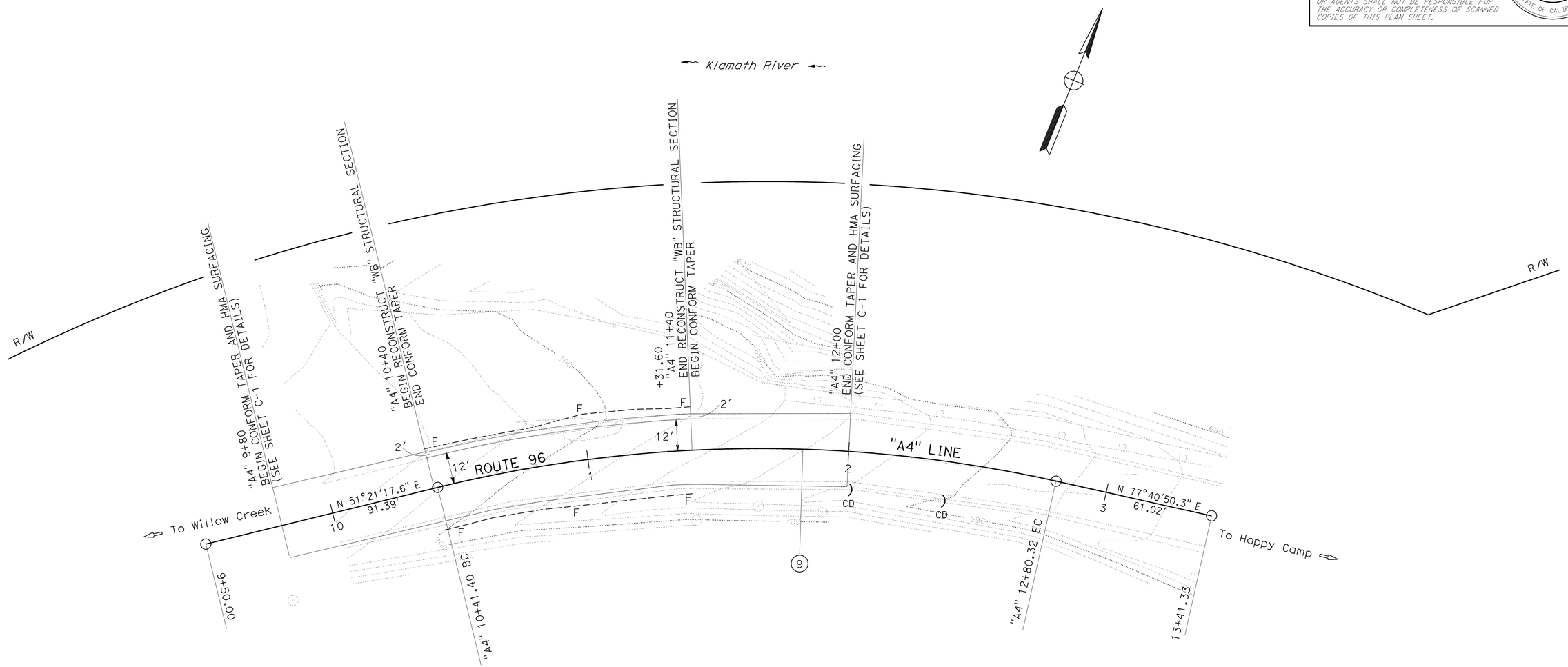

LOCATION 4

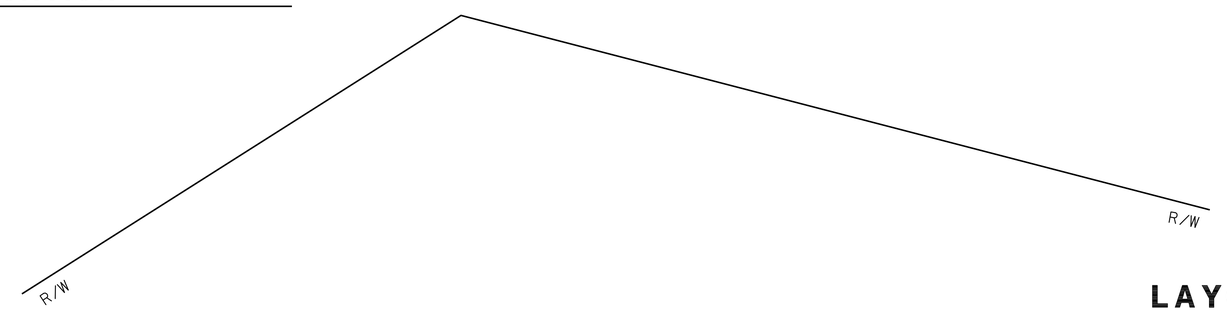

SCALE: 1"=20′

LAYOUT L-9

REVISED BY	DATE REVISED

CALCULATED-DESIGNED BY: BIJAN SAMRAD
CHECKED BY: TALITHA STIMSON
FUNCTIONAL SUPERVISOR: L.R.ASHLEY

STATE OF CALIFORNIA - DEPARTMENT OF TRANSPORTATION
Caltrans®
DESIGN

\\SV01S01\PSESUBMITX01_472301\147230ea009.dgn

LAST REVISION 03-18-09 DATE PLOTTED => 25-SEP-2009 TIME PLOTTED => 06:24

BORDER LAST REVISED 4/11/2008 | RELATIVE BORDER SCALE IS IN INCHES 0 1 2 3 | USERNAME => trmikesl DGN FILE => 147230ea009.dgn | CU 03232 | EA 472301

Dist	COUNTY	ROUTE	POST MILES TOTAL PROJECT	SHEET No.	TOTAL SHEETS
01	Hum	96	26.9/R41.1	14	53

REGISTERED CIVIL ENGINEER 03/18/09 DATE

9-21-09
PLANS APPROVAL DATE

REGISTERED PROFESSIONAL ENGINEER TALITHA STIMSON No. C 59258 Exp. 6-30-11 CIVIL STATE OF CALIFORNIA

THE STATE OF CALIFORNIA OR ITS OFFICERS OR AGENTS SHALL NOT BE RESPONSIBLE FOR THE ACCURACY OR COMPLETENESS OF SCANNED COPIES OF THIS PLAN SHEET.

NOTES:

1. FOR COMPLETE RIGHT OF WAY DATA, SEE RIGHT OF WAY RECORD MAPS AT DISTRICT OFFICE.
2. UNLESS OTHERWISE SPECIFIED, R/W IS ASSUMED AS PRESCRIPTIVE ON USFS PROPERTY.
3. COORDINATE VALUES SHOWN ARE CCS 83, ZONE 1, NAVD 88

CURVE DATA

No.	R	Δ	T	L	N	E
10	700′	22°56′17"	142.02′	280.24′	2371190.3927	6144865.3653
11	900′	8°35′00"	67.54′	134.83′	2371337.1949	6144724.4484

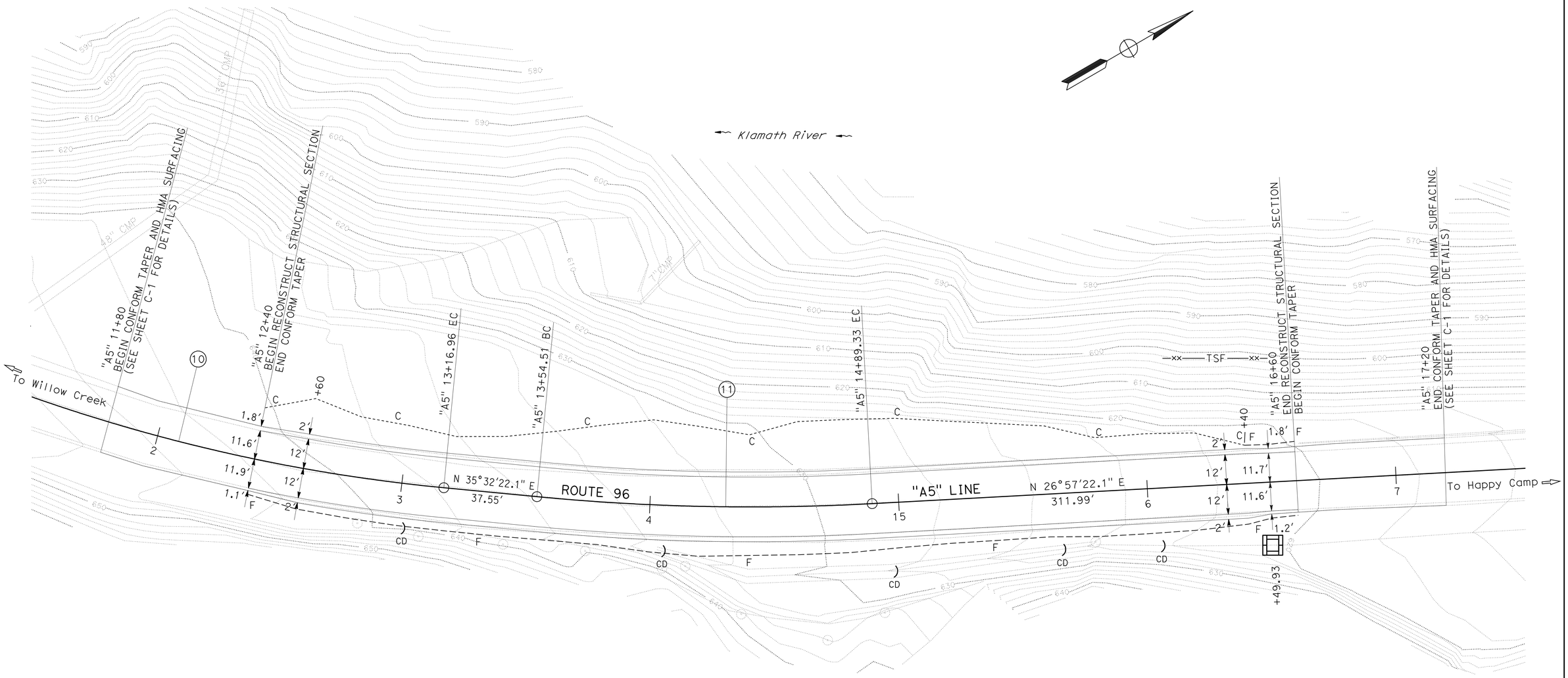

LOCATION 5

SCALE: 1"=20′

LAYOUT L-10

REVISED BY	DATE REVISED
BIJAN SAMRAD	TALITHA STIMSON
CALCULATED-DESIGNED BY	CHECKED BY
FUNCTIONAL SUPERVISOR	L.R.ASHLEY

STATE OF CALIFORNIA - DEPARTMENT OF TRANSPORTATION
Caltrans DESIGN

\\SV01S01\PSESUBMIT\01_472301\147230ea010.dgn

LAST REVISION 03-18-09 DATE PLOTTED => 25-SEP-2009 TIME PLOTTED => 06:24

BORDER LAST REVISED 4/11/2008 | RELATIVE BORDER SCALE IS IN INCHES 0 1 2 3 | USERNAME => trmikesl DGN FILE => 147230ea010.dgn | CU 03232 | EA 472301

Dist	COUNTY	ROUTE	POST MILES TOTAL PROJECT	SHEET No.	TOTAL SHEETS
01	Hum	96	26.9/R41.1	15	53

REGISTERED CIVIL ENGINEER 03/18/09 DATE

9-21-09
PLANS APPROVAL DATE

REGISTERED PROFESSIONAL ENGINEER TALITHA STIMSON No. C 59258 Exp. 6-30-11 CIVIL STATE OF CALIFORNIA

THE STATE OF CALIFORNIA OR ITS OFFICERS OR AGENTS SHALL NOT BE RESPONSIBLE FOR THE ACCURACY OR COMPLETENESS OF SCANNED COPIES OF THIS PLAN SHEET.

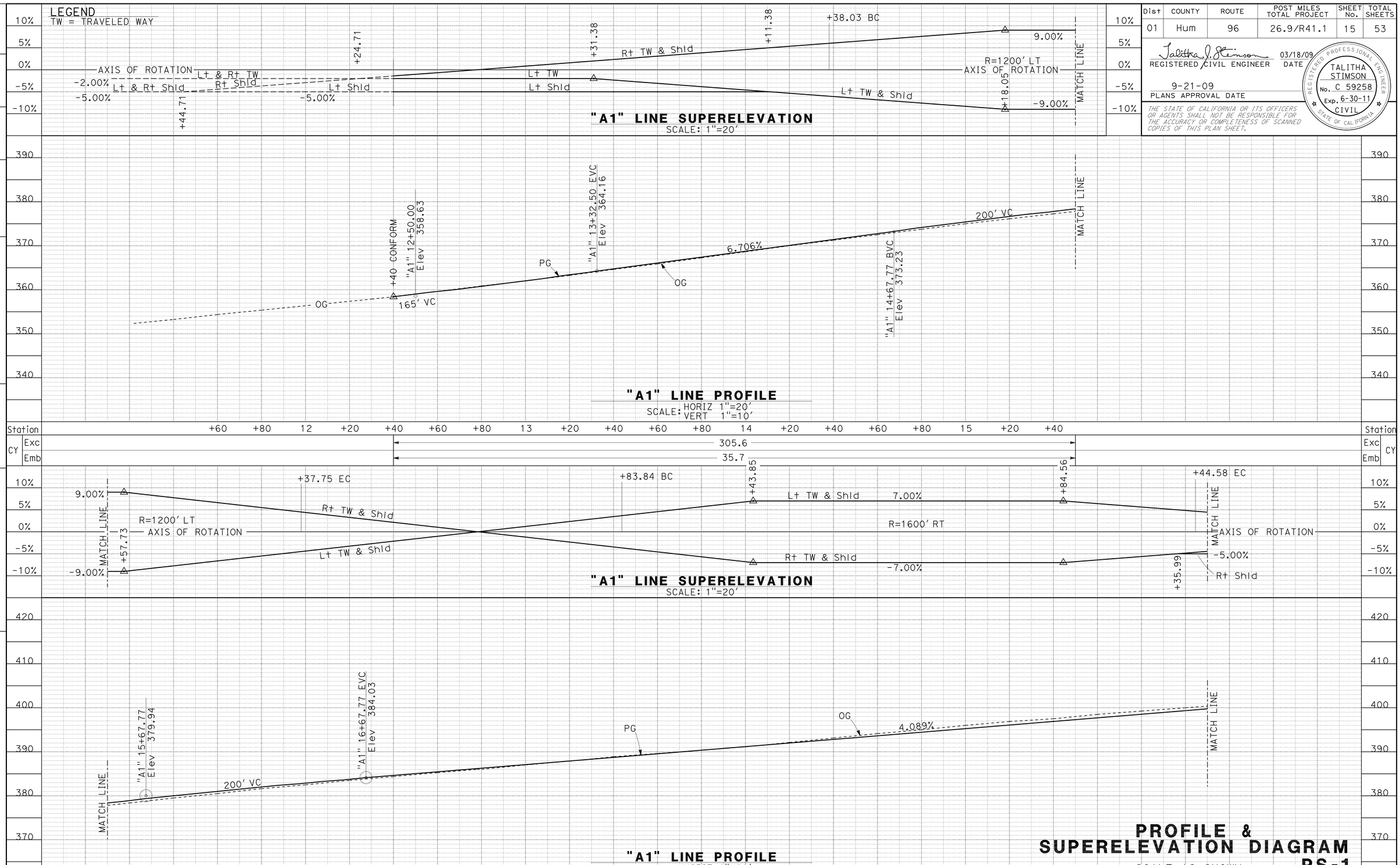

"A1" LINE SUPERELEVATION
SCALE: 1"=20'

"A1" LINE PROFILE
SCALE: HORIZ 1"=20' VERT 1"=10'

"A1" LINE SUPERELEVATION
SCALE: 1"=20'

"A1" LINE PROFILE
SCALE: HORIZ 1"=20' VERT 1"=10'

PROFILE & SUPERELEVATION DIAGRAM
SCALE AS SHOWN
PS-1

REVISED BY | DATE REVISED
BIJAN SAMRAD | TALITHA STIMSON
CALCULATED-DESIGNED BY | CHECKED BY
FUNCTIONAL SUPERVISOR | L.R.ASHLEY
STATE OF CALIFORNIA - DEPARTMENT OF TRANSPORTATION
DESIGN
Caltrans

\\SV01S01\PSESUBMIT\01_472301\147230fb001.dgn

DATE PLOTTED => 25-SEP-2009
TIME PLOTTED => 06:24
LAST REVISION 03-18-09

BORDER LAST REVISED 4/11/2008
RELATIVE BORDER SCALE IS IN INCHES 0 1 2 3
USERNAME => trmikesl
DGN FILE => 147230fb001.dgn
CU 03232
EA 472301

Dist	COUNTY	ROUTE	POST MILES TOTAL PROJECT	SHEET No.	TOTAL SHEETS
01	Hum	96	26.9/R41.1	16	53

REGISTERED CIVIL ENGINEER — DATE 03/18/09

9-21-09
PLANS APPROVAL DATE

REGISTERED PROFESSIONAL ENGINEER — TALITHA STIMSON — No. C 59258 — Exp. 6-30-11 — CIVIL — STATE OF CALIFORNIA

THE STATE OF CALIFORNIA OR ITS OFFICERS OR AGENTS SHALL NOT BE RESPONSIBLE FOR THE ACCURACY OR COMPLETENESS OF SCANNED COPIES OF THIS PLAN SHEET.

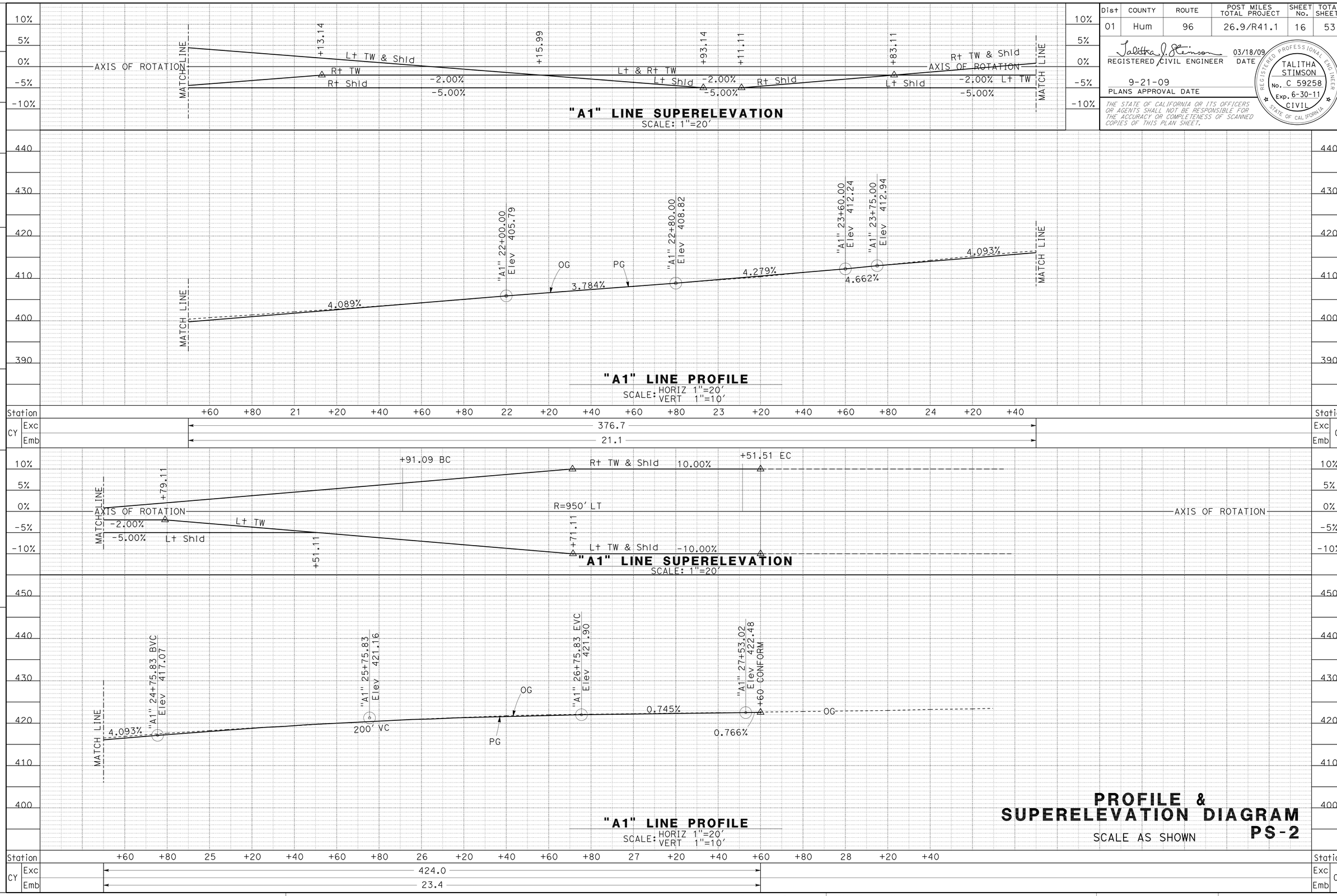

PROFILE & SUPERELEVATION DIAGRAM

SCALE AS SHOWN

PS-2

REVISED BY | DATE REVISED

BIJAN SAMRAD | TALITHA STIMSON

CALCULATED-DESIGNED BY | CHECKED BY

FUNCTIONAL SUPERVISOR: L.R.ASHLEY

STATE OF CALIFORNIA - DEPARTMENT OF TRANSPORTATION

DESIGN

Caltrans

\\SV01S01\PSESUBMIT\01_472301\147230fb002.dgn

LAST REVISION 03-18-09 | DATE PLOTTED => 25-SEP-2009 | TIME PLOTTED => 06:24

Dist	COUNTY	ROUTE	POST MILES TOTAL PROJECT	SHEET No.	TOTAL SHEETS
01	Hum	96	26.9/R41.1	17	53

REGISTERED CIVIL ENGINEER 03/18/09 DATE

9-21-09
PLANS APPROVAL DATE

REGISTERED PROFESSIONAL ENGINEER TALITHA STIMSON No. C 59258 Exp. 6-30-11 CIVIL STATE OF CALIFORNIA

THE STATE OF CALIFORNIA OR ITS OFFICERS OR AGENTS SHALL NOT BE RESPONSIBLE FOR THE ACCURACY OR COMPLETENESS OF SCANNED COPIES OF THIS PLAN SHEET.

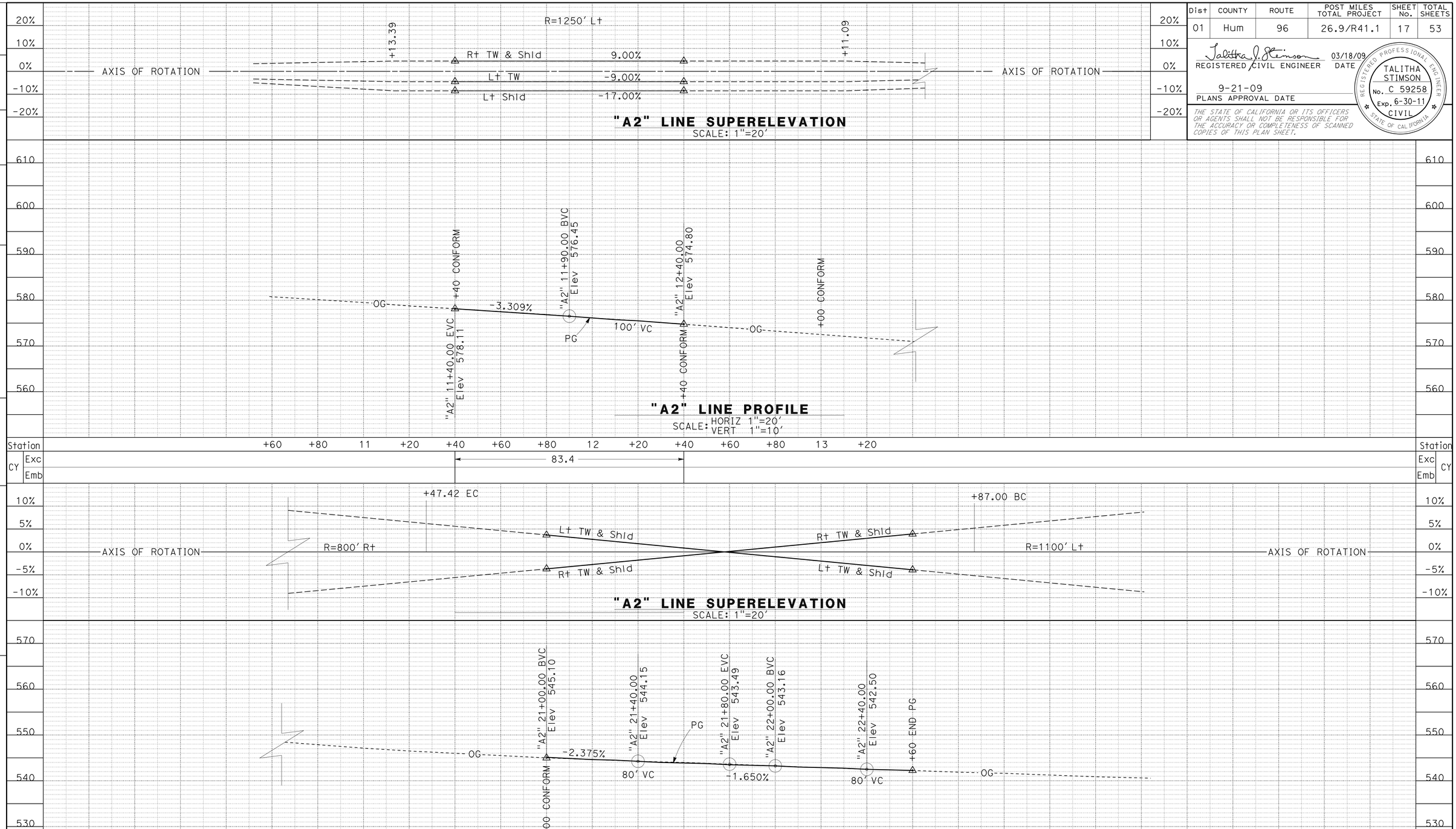

PROFILE & SUPERELEVATION DIAGRAM

SCALE AS SHOWN

PS-3

REVISED BY | DATE REVISED

BIJAN SAMRAD | TALITHA STIMSON

CALCULATED-DESIGNED BY | CHECKED BY

FUNCTIONAL SUPERVISOR: L.R.ASHLEY

STATE OF CALIFORNIA - DEPARTMENT OF TRANSPORTATION

Caltrans DESIGN

\\SV01S01\PSESUBMIT\01_472301\147230fb003.dgn

LAST REVISION 03-18-09 | DATE PLOTTED => 25-SEP-2009 | TIME PLOTTED => 06:24

BORDER LAST REVISED 4/11/2008 | RELATIVE BORDER SCALE IS IN INCHES 0 1 2 3 | USERNAME => trmikesl | DGN FILE => 147230fb003.dgn | CU 03232 | EA 472301

Dist	COUNTY	ROUTE	POST MILES TOTAL PROJECT	SHEET No.	TOTAL SHEETS
01	Hum	96	26.9/R41.1	18	53

REGISTERED CIVIL ENGINEER 03/18/09 DATE

9-21-09
PLANS APPROVAL DATE

REGISTERED PROFESSIONAL ENGINEER TALITHA STIMSON No. C 59258 Exp. 6-30-11 CIVIL STATE OF CALIFORNIA

THE STATE OF CALIFORNIA OR ITS OFFICERS OR AGENTS SHALL NOT BE RESPONSIBLE FOR THE ACCURACY OR COMPLETENESS OF SCANNED COPIES OF THIS PLAN SHEET.

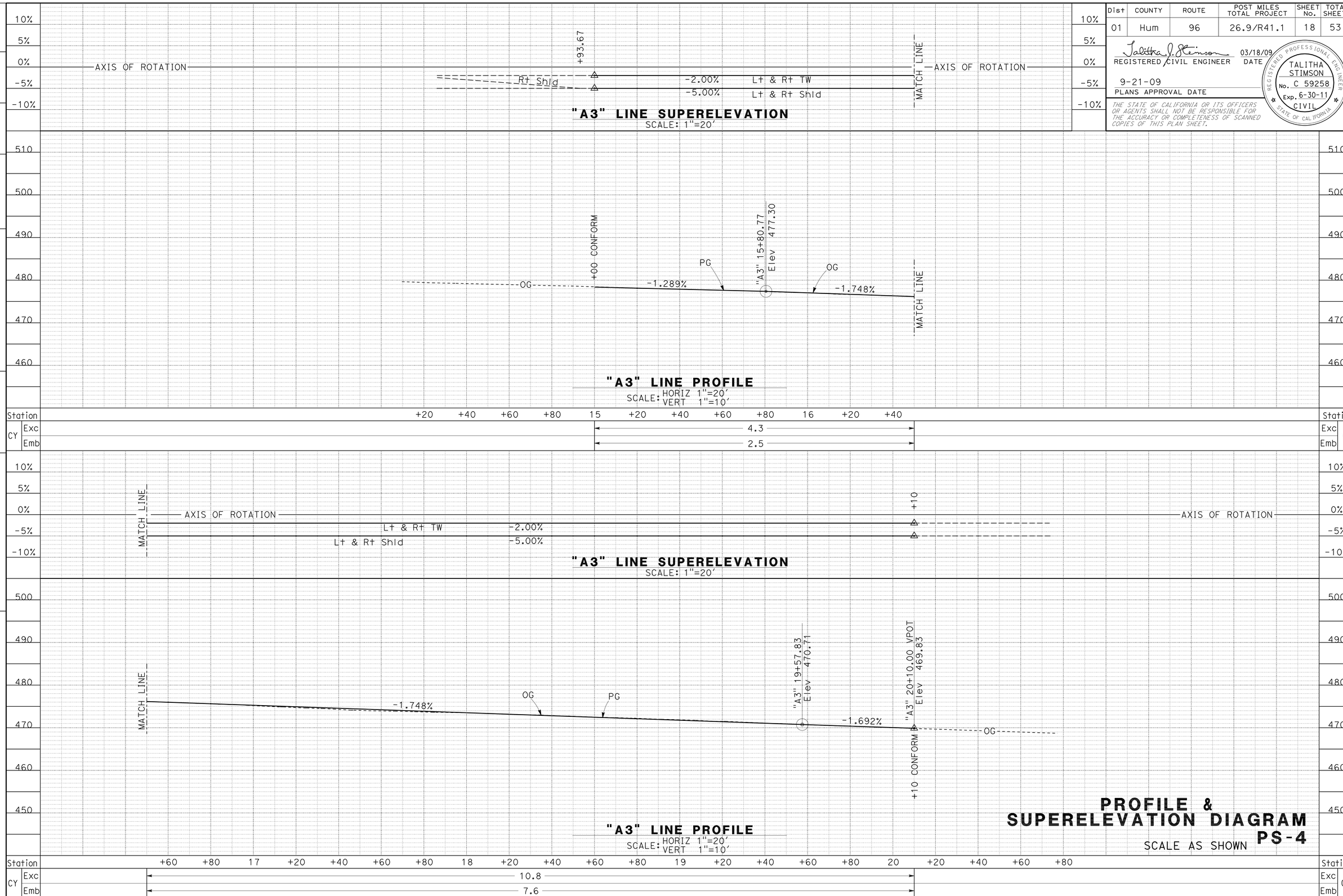

PROFILE & SUPERELEVATION DIAGRAM

SCALE AS SHOWN

PS-4

REVISED BY: BIJAN SAMRAD
DATE REVISED: TALITHA STIMSON
CALCULATED-DESIGNED BY:
CHECKED BY:
FUNCTIONAL SUPERVISOR: L.R.ASHLEY

STATE OF CALIFORNIA - DEPARTMENT OF TRANSPORTATION
Caltrans
DESIGN

\\SV01S01\PSESUBMIT\01_472301\147230fb004.dgn

LAST REVISION DATE PLOTTED => 25-SEP-2009
TIME PLOTTED => 06:24
03-18-09

BORDER LAST REVISED 4/11/2008

RELATIVE BORDER SCALE IS IN INCHES 0 1 2 3

USERNAME => trmikesl
DGN FILE => 147230fb004.dgn

CU 03232

EA 472301

Dist	COUNTY	ROUTE	POST MILES TOTAL PROJECT	SHEET No.	TOTAL SHEETS
01	Hum	96	26.9/R41.1	19	53

REGISTERED CIVIL ENGINEER 03/18/09 DATE

9-21-09
PLANS APPROVAL DATE

REGISTERED PROFESSIONAL ENGINEER TALITHA STIMSON No. C 59258 Exp. 6-30-11 CIVIL STATE OF CALIFORNIA

THE STATE OF CALIFORNIA OR ITS OFFICERS OR AGENTS SHALL NOT BE RESPONSIBLE FOR THE ACCURACY OR COMPLETENESS OF SCANNED COPIES OF THIS PLAN SHEET.

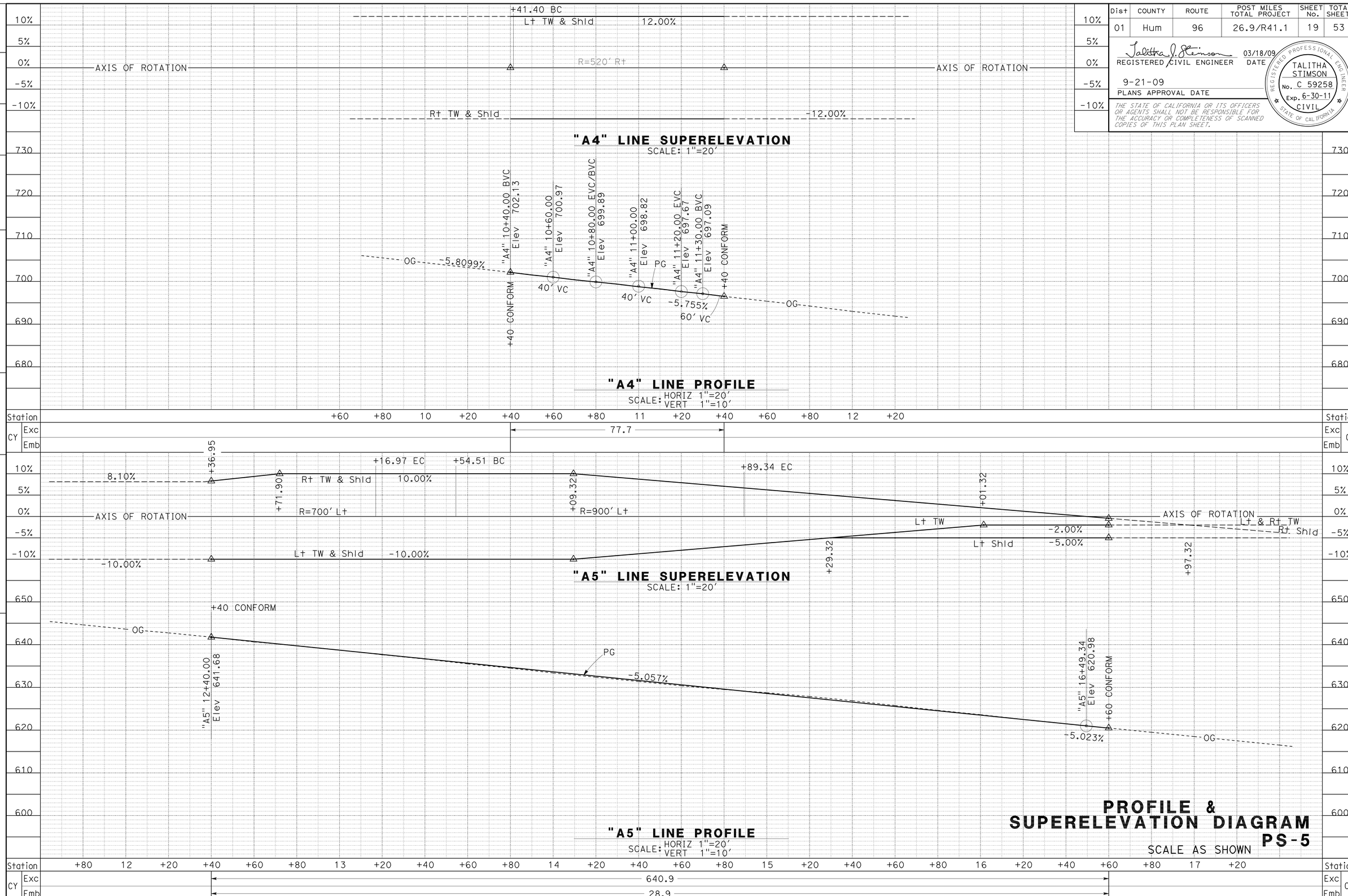

PROFILE & SUPERELEVATION DIAGRAM

PS-5

SCALE AS SHOWN

REVISED BY	DATE REVISED

BIJAN SAMRAD — TALITHA STIMSON

CALCULATED-DESIGNED BY — CHECKED BY

FUNCTIONAL SUPERVISOR: L.R.ASHLEY

STATE OF CALIFORNIA - DEPARTMENT OF TRANSPORTATION

Caltrans DESIGN

\\SV01S01\PSESUBMIT\01_472301\147230fb005.dgn

LAST REVISION 03-18-09

DATE PLOTTED => 25-SEP-2009
TIME PLOTTED => 06:24

BORDER LAST REVISED 4/11/2008

RELATIVE BORDER SCALE IS IN INCHES 0 1 2 3

USERNAME => trmikesl
DGN FILE => 147230fb005.dgn

CU 03232

EA 472301

Dist	COUNTY	ROUTE	POST MILES TOTAL PROJECT	SHEET No.	TOTAL SHEETS
01	Hum	96	26.9/R41.1	20	53

REGISTERED CIVIL ENGINEER 03/18/09 DATE

9-21-09
PLANS APPROVAL DATE

REGISTERED PROFESSIONAL ENGINEER TALITHA STIMSON No. C 59258 Exp. 6-30-11 CIVIL STATE OF CALIFORNIA

THE STATE OF CALIFORNIA OR ITS OFFICERS OR AGENTS SHALL NOT BE RESPONSIBLE FOR THE ACCURACY OR COMPLETENESS OF SCANNED COPIES OF THIS PLAN SHEET.

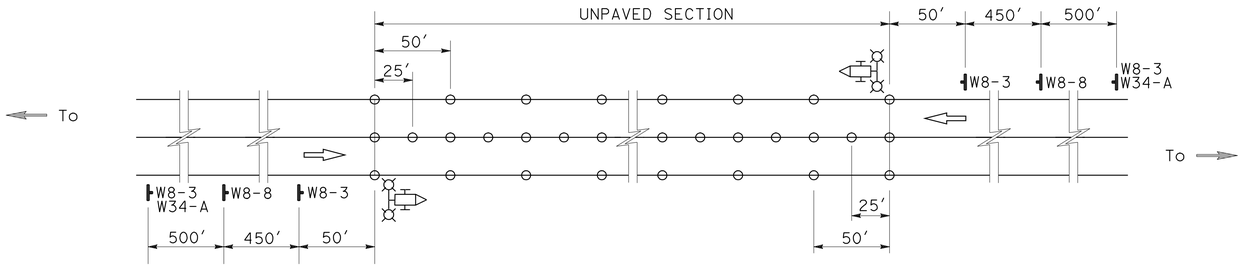

TYPICAL TRAVELED WAY CHANNELIZATION ON UNPAVED SURFACE

LEGEND:

- ○ PORTABLE DELINEATOR
- ⇨ DIRECTION OF TRAVEL
- PORTABLE LIGHT TOWER WITH GENERATOR

TYPE	PANEL SIZE	SIGN MESSAGE	NO. OF POSTS AND SIZE
W8-3	42"x42"	"PAVEMENT ENDS"	1-4"X6"
W34-A	20"x7"	"1000 FT"	
W8-8	30"x30"	"ROUGH ROAD"	1-4"X4"
W8-3	42"x42"	"PAVEMENT ENDS"	1-4"X6"

NOTES: 1. EXACT SIGN LOCATIONS TO BE DETERMINED BY THE ENGINEER.
2. SIGNS TO BE USED ONLY WHEN UNPAVED CONDITION EXISTS.
3. SIGNS SHALL BE BLACK ON ORANGE.

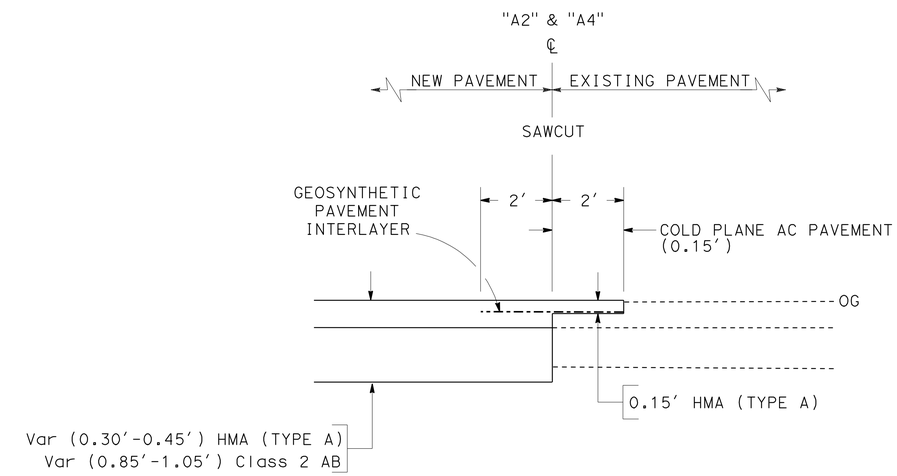

STRUCTURAL SECTION REINFORCING
LONGITUDINAL CONFORM

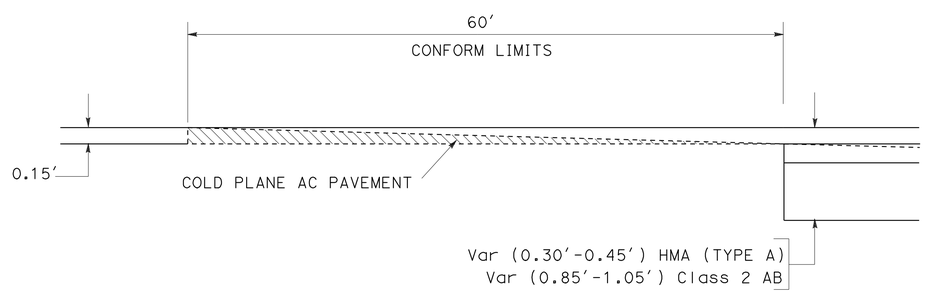

PAVING CONFORM

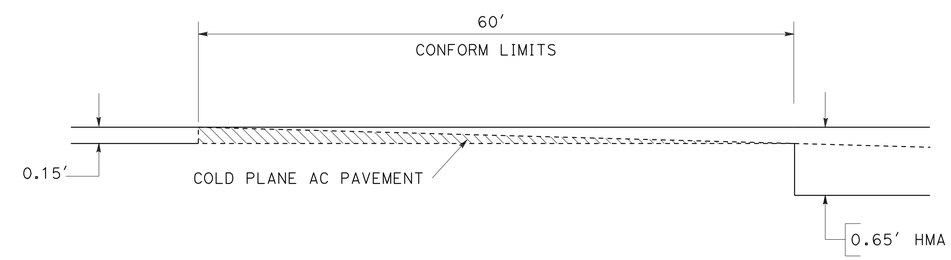

PAVING CONFORM
(LOCATION 3 ONLY)

CONSTRUCTION DETAILS
NO SCALE

C-1

REVISED BY | DATE REVISED

BIJAN SAMRAD | TALITHA STIMSON

CALCULATED-DESIGNED BY | CHECKED BY

FUNCTIONAL SUPERVISOR: L.R.ASHLEY

STATE OF CALIFORNIA - DEPARTMENT OF TRANSPORTATION
Caltrans® DESIGN

\\SV01S01\PSESUBMIT\01_472301(REPLACE)\147230ga001.dgn

LAST REVISION 05-04-09 | DATE PLOTTED => 25-SEP-2009 | TIME PLOTTED => 06:25

Dist	COUNTY	ROUTE	POST MILES TOTAL PROJECT	SHEET No.	TOTAL SHEETS
01	Hum	96	26.9/R41.1	21	53

REGISTERED CIVIL ENGINEER 03/18/09 DATE

9-21-09
PLANS APPROVAL DATE

REGISTERED PROFESSIONAL ENGINEER TALITHA STIMSON No. C 59258 Exp. 6-30-11 CIVIL STATE OF CALIFORNIA

THE STATE OF CALIFORNIA OR ITS OFFICERS OR AGENTS SHALL NOT BE RESPONSIBLE FOR THE ACCURACY OR COMPLETENESS OF SCANNED COPIES OF THIS PLAN SHEET.

NOTES:

1. FOR COMPLETE RIGHT OF WAY DATA, SEE RIGHT OF WAY RECORD MAPS AT DISTRICT OFFICE.
2. UNLESS OTHERWISE SPECIFIED, R/W IS ASSUMED AS PRESCRIPTIVE ON USFS PROPERTY.

UNDERDRAIN LOCATIONS

STATION "A1" LINE	OFFSET Lt OF ℄	ORIGINAL GROUND ELEVATION	UNDERDRAIN FLOWLINE ELEVATION	DEPTH*	SLOPE	NOTES
	FT				%	
12+60.1	31.5	354.61	354.61	0	2.8	BEGIN UD OUTLET INTO DITCH AT PM 26.98
12+88.6	19.3	359.94	355.54	4.4	2.8	
13+38.4	17.3	363.07	356.95	6.12	6.4	
13+79.6	-	-	-	6.65	6.4	UD CONTINUES UNDER DI AT PM 27.02
13+88.6	16.8	366.65	360.15	6.5	5.3	
14+38.1	21.6	369.05	362.55	6.5	7.0	
14+87.9	16.7	372.68	366.18	6.5	6.2	
15+38.0	16.2	375.61	369.11	6.5	-	END UNDERDRAIN TERMINAL RISER

*UNDERDRAIN DEPTHS MAY VARY +/- 0.5'.

LEGEND:

- (X) = DRAINAGE SYSTEM No.
- (x) = DRAINAGE UNIT
- = RSP
- RLD = ROCK LINED DITCH
- = MARKER (CULVERT)

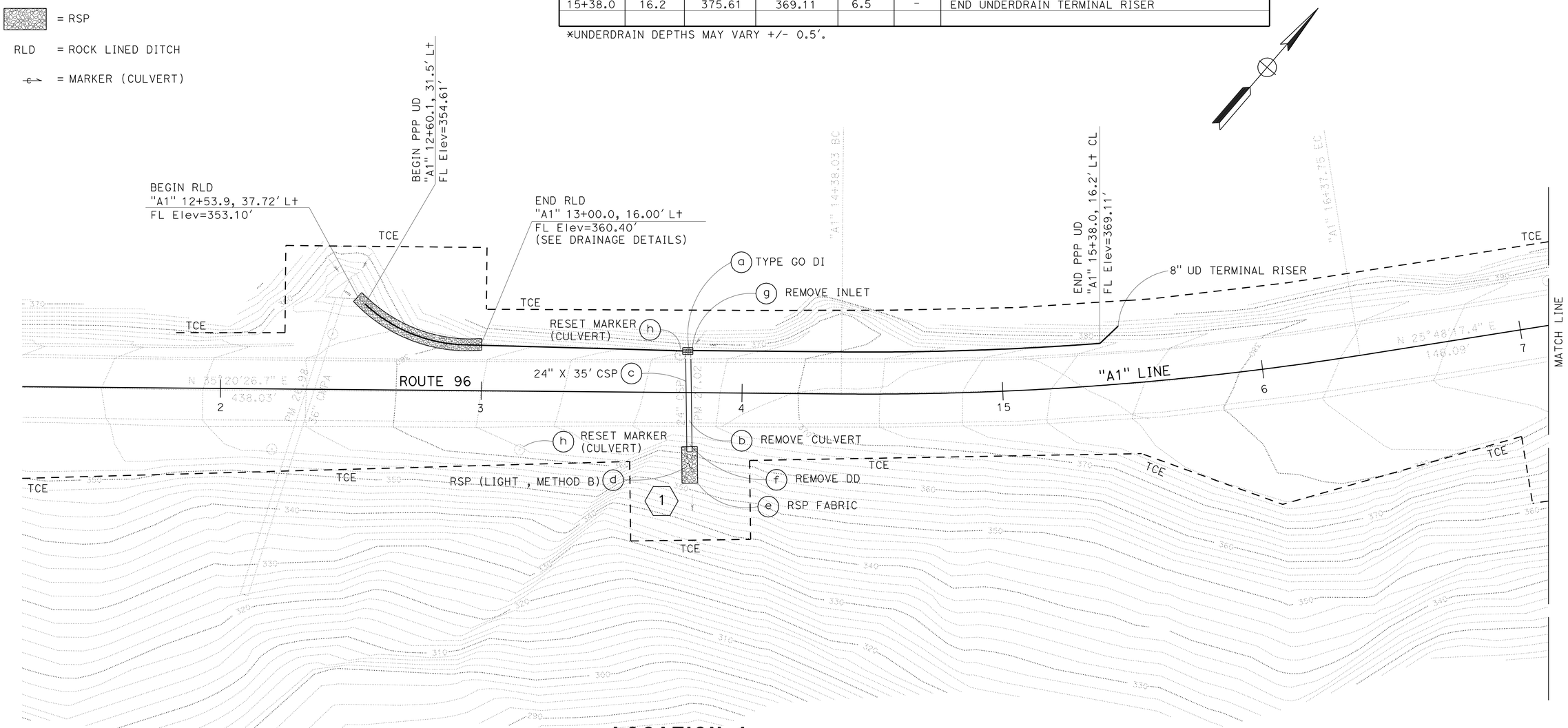

LOCATION 1

Klamath River

THIS PLAN ACCURATE FOR DRAINAGE WORK ONLY.

DRAINAGE PLAN

SCALE: 1"=20'

D-1

REVISED BY	DATE REVISED
KRISTINA WALKER	TALITHA STIMSON

CALCULATED-DESIGNED BY / CHECKED BY

FUNCTIONAL SUPERVISOR: L.R.ASHLEY

STATE OF CALIFORNIA - DEPARTMENT OF TRANSPORTATION

Caltrans® DESIGN

\\SV01S01\PSESUBMIT\01_472301\147230ia001.dgn

LAST REVISION 03-18-09 | DATE PLOTTED => 25-SEP-2009 | TIME PLOTTED => 06:25

BORDER LAST REVISED 4/11/2008 | RELATIVE BORDER SCALE IS IN INCHES 0 1 2 3 | USERNAME => trmikesl | DGN FILE => 147230ia001.dgn | CU 03232 | EA 472301

Dist	COUNTY	ROUTE	POST MILES TOTAL PROJECT	SHEET No.	TOTAL SHEETS
01	Hum	96	26.9/R41.1	22	53

REGISTERED CIVIL ENGINEER — DATE 03/18/09

9-21-09
PLANS APPROVAL DATE

REGISTERED PROFESSIONAL ENGINEER — TALITHA STIMSON — No. C 59258 — Exp. 6-30-11 — CIVIL — STATE OF CALIFORNIA

THE STATE OF CALIFORNIA OR ITS OFFICERS OR AGENTS SHALL NOT BE RESPONSIBLE FOR THE ACCURACY OR COMPLETENESS OF SCANNED COPIES OF THIS PLAN SHEET.

NOTES:

1. FOR COMPLETE RIGHT OF WAY DATA, SEE RIGHT OF WAY RECORD MAPS AT DISTRICT OFFICE.
2. UNLESS OTHERWISE SPECIFIED, R/W IS ASSUMED AS PRESCRIPTIVE ON USFS PROPERTY.

UNDERDRAIN LOCATIONS

STATION "A1" LINE	OFFSET Lt OF ℄	ORIGINAL GROUND ELEVATION	UNDERDRAIN FLOWLINE ELEVATION	DEPTH*	SLOPE	NOTES
	FT				%	
17+18.3	15.2	385.49	382.45	3.0	2.0	BEGIN UD OUTLET INTO DI AT PM 27.10
17+76.1	16.7	387.40	383.46	3.9	2.0	
18+03.0	17.3	388.25	383.88	4.4	2.0	
18+26.5	16.4	389.25	384.24	5.0	2.0	
18+75.0	14.7	391.78	385.28	6.5	3.8	
19+25.3	15.6	394.50	388.00	6.5	4.3	
19+74.6	16.0	396.62	390.12	6.5	4.0	CLEANOUT AT THIS LOCATION
20+23.8	16.2	398.49	391.99	6.5	3.2	
20+73.4	16.7	400.20	393.70	6.5	3.5	
21+23.5	16.6	402.00	395.50	6.5	3.3	
21+73.7	16.9	403.66	397.16	6.5	-	END UD TERMINAL RISER

*UNDERDRAIN DEPTHS MAY VARY +/- 0.5'.

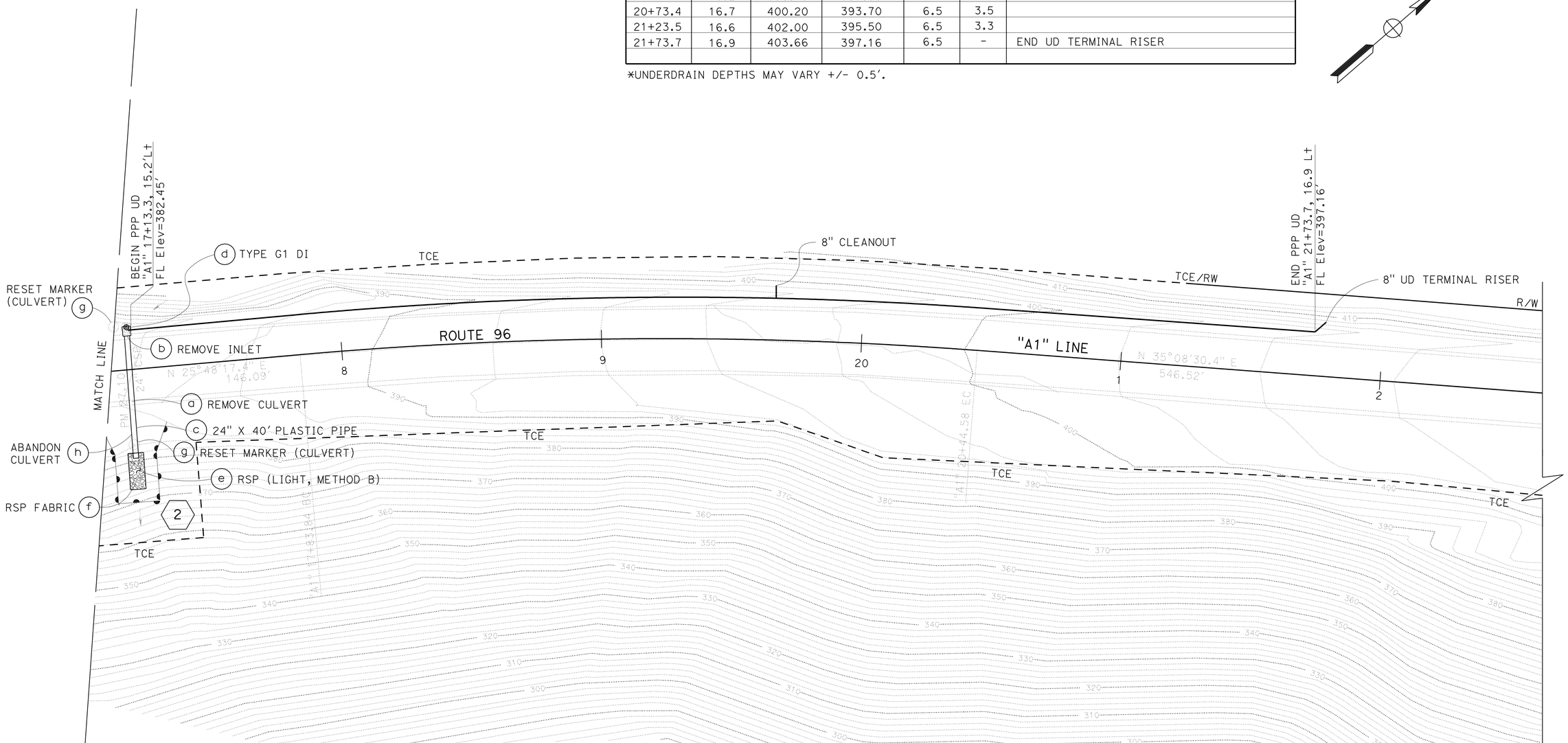

LOCATION 1

THIS PLAN ACCURATE FOR DRAINAGE WORK ONLY.

DRAINAGE PLAN D-2

SCALE: 1"=20'

STATE OF CALIFORNIA - DEPARTMENT OF TRANSPORTATION — DESIGN

FUNCTIONAL SUPERVISOR: L.R.ASHLEY

CALCULATED-DESIGNED BY: KRISTINA WALKER — CHECKED BY: TALITHA STIMSON

REVISED BY — DATE REVISED

LAST REVISION 03-18-09 — DATE PLOTTED => 25-SEP-2009 — TIME PLOTTED => 06:25

\\SV01S01\PSESUBMIT\01_472301\147230ia002.dgn

BORDER LAST REVISED 4/11/2008 — RELATIVE BORDER SCALE IS IN INCHES 0 1 2 3 — USERNAME => trmikesl — DGN FILE => 147230ia002.dgn — CU 03232 — EA 472301

Dist	COUNTY	ROUTE	POST MILES TOTAL PROJECT	SHEET No.	TOTAL SHEETS
01	Hum	96	26.9/R41.1	23	53

REGISTERED CIVIL ENGINEER 03/18/09 DATE

9-21-09
PLANS APPROVAL DATE

REGISTERED PROFESSIONAL ENGINEER TALITHA STIMSON No. C 59258 Exp. 6-30-11 CIVIL STATE OF CALIFORNIA

THE STATE OF CALIFORNIA OR ITS OFFICERS OR AGENTS SHALL NOT BE RESPONSIBLE FOR THE ACCURACY OR COMPLETENESS OF SCANNED COPIES OF THIS PLAN SHEET.

NOTES:

1. FOR COMPLETE RIGHT OF WAY DATA, SEE RIGHT OF WAY RECORD MAPS AT DISTRICT OFFICE.
2. UNLESS OTHERWISE SPECIFIED, R/W IS ASSUMED AS PRESCRIPTIVE ON USFS PROPERTY.

UNDERDRAIN LOCATIONS

STATION "A1" LINE	OFFSET Lt OF ℄	ORIGINAL GROUND ELEVATION	UNDERDRAIN FLOWLINE ELEVATION	DEPTH*	SLOPE	NOTES
	FT				%	
25+23.9	18.1	414.63	413.97	0.7	–	BEGIN UD OUTLET INTO DI AT PM 27.20
25+83.7	18.2	418.11	414.50	3.6	1.1	
26+83.7	18.2	419.41	414.75	4.7	0.5	
27+33.7	16.5	418.86	415.00	3.9	0.5	
27+35.7	14.7	420.58	416.00	4.6	2.0	END UD TERMINAL RISER

*UNDERDRAIN DEPTHS MAY VARY +/- 0.5'.

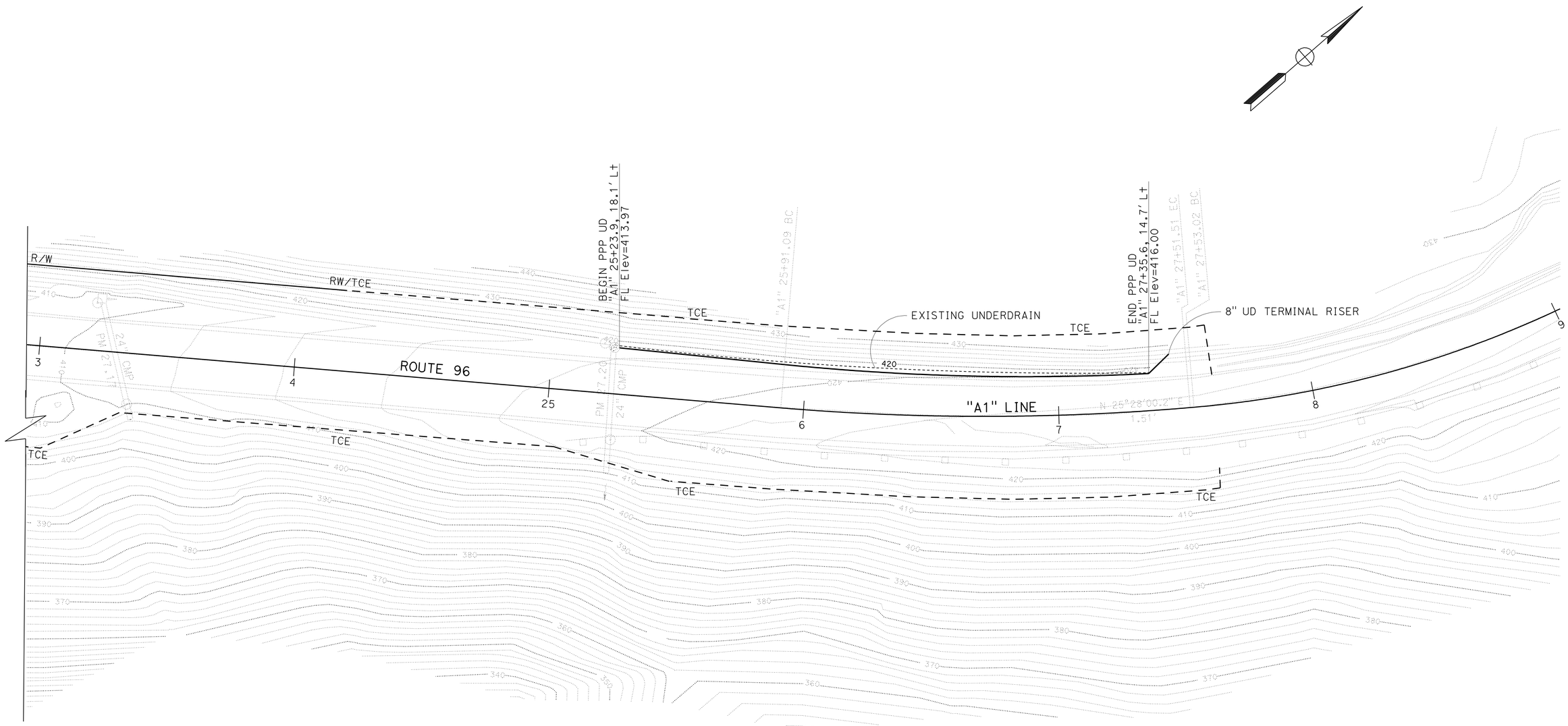

LOCATION 1

← Klamath River ←

THIS PLAN ACCURATE FOR DRAINAGE WORK ONLY.

DRAINAGE PLAN D-3

SCALE: 1"=20'

REVISED BY	DATE REVISED

KRISTINA WALKER — CALCULATED-DESIGNED BY
TALITHA STIMSON — CHECKED BY
L.R.ASHLEY — FUNCTIONAL SUPERVISOR

STATE OF CALIFORNIA - DEPARTMENT OF TRANSPORTATION
Caltrans
DESIGN

\\SV01S01\PSESUBMIT\01_472301\147230ia003.dgn

LAST REVISION 03-18-09 | DATE PLOTTED => 25-SEP-2009 | TIME PLOTTED => 06:25

Dist	COUNTY	ROUTE	POST MILES TOTAL PROJECT	SHEET No.	TOTAL SHEETS
01	Hum	96	26.9/R41.1	24	53

Talitha J. Stimson 03/18/09
REGISTERED CIVIL ENGINEER DATE

9-21-09
PLANS APPROVAL DATE

REGISTERED PROFESSIONAL ENGINEER TALITHA STIMSON No. C 59258 Exp. 6-30-11 CIVIL STATE OF CALIFORNIA

THE STATE OF CALIFORNIA OR ITS OFFICERS OR AGENTS SHALL NOT BE RESPONSIBLE FOR THE ACCURACY OR COMPLETENESS OF SCANNED COPIES OF THIS PLAN SHEET.

NOTES:

1. FOR COMPLETE RIGHT OF WAY DATA, SEE RIGHT OF WAY RECORD MAPS AT DISTRICT OFFICE.
2. UNLESS OTHERWISE SPECIFIED, R/W IS ASSUMED AS PRESCRIPTIVE ON USFS PROPERTY.

UNDERDRAIN LOCATIONS

STATION "A2" LINE	OFFSET Lt OF ℄	ORIGINAL GROUND ELEVATION	UNDERDRAIN FLOWLINE ELEVATION	DEPTH*	SLOPE	NOTES
	FT				%	
20+97.2	28.3	543.79	539.69	4.1	-	BEGIN UD TERMINAL RISER
21+67.4	27.2	541.98	544.28	4.1	-2.3	
22+30.1	26.4	540.77	543.07	4.1	-2.3	
22+45.1	25.6	540.44	536.34	4.1	-2.3	END UD OUTLET INTO DI AT PM 35.34

*UNDERDRAIN DEPTHS MAY VARY +/- 0.5'.

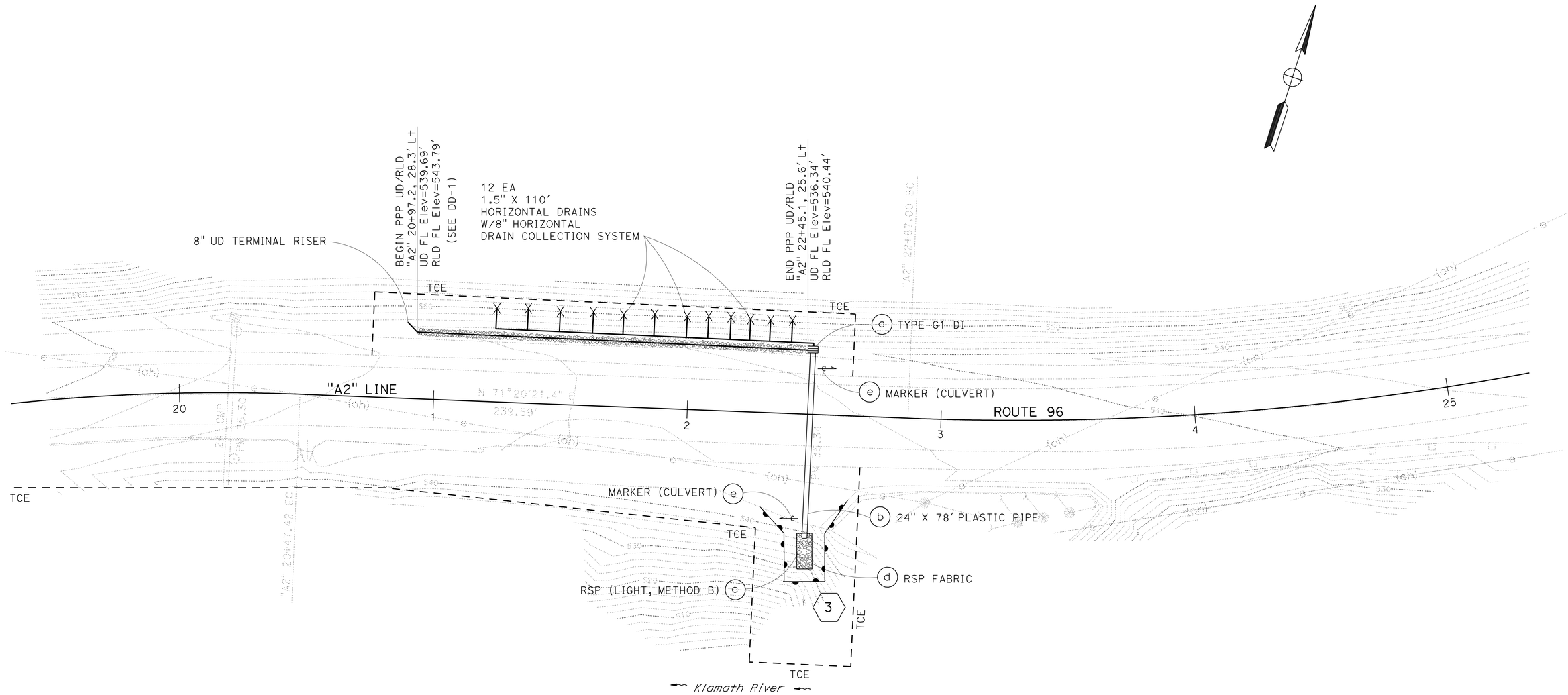

LOCATION 2

THIS PLAN ACCURATE FOR DRAINAGE WORK ONLY.

DRAINAGE PLAN
SCALE: 1"=20'
D-4

STATE OF CALIFORNIA - DEPARTMENT OF TRANSPORTATION
Caltrans
DESIGN

FUNCTIONAL SUPERVISOR: L.R.ASHLEY
CALCULATED-DESIGNED BY: KRISTINA WALKER
CHECKED BY: TALITHA STIMSON
REVISED BY
DATE REVISED

\\SV01S01\PSESUBMIT\01_472301\1472301a004.dgn

LAST REVISION 03-18-09
DATE PLOTTED => 25-SEP-2009
TIME PLOTTED => 06:25

NOTES:

1. FOR COMPLETE RIGHT OF WAY DATA, SEE RIGHT OF WAY RECORD MAPS AT DISTRICT OFFICE.
2. UNLESS OTHERWISE SPECIFIED, R/W IS ASSUMED AS PRESCRIPTIVE ON USFS PROPERTY.

UNDERDRAIN LOCATIONS

STATION "A3" LINE	OFFSET L+ OF ℄	ORIGINAL GROUND ELEVATION	UNDERDRAIN FLOWLINE ELEVATION	DEPTH*	SLOPE	NOTES
	FT				%	
16+00.0	19.9	475.64	469.64	6.0	-	BEGIN UD TERMINAL RISER
16+48.1	27.2	474.34	468.34	6.0	-2.7	
16+63.1	29.6	473.71	467.71	6.0	-4.2	
16+75.0	28.9	473.37	467.37	6.0	-2.8	
16+86.8	29.5	470.27	467.26	5.5	-0.9	
17+38.9	31.3	470.27	464.92	5.3	-4.5	END UD OUTLET INTO DI AT PM 36.05
17+42.9	31.3	470.27	464.92	5.3	-	BEGIN UD, TIE INTO DI AT PM 36.05
17+75.6	31.6	470.26	465.16	5.1	0.7	
18+01.7	28.8	471.08	465.88	5.2	2.8	
18+09.5	24.5	471.69	466.19	5.5	3.9	
18+53.1	21.5	471.24	466.74	4.5	1.3	
19+33.9	20.5	470.27	467.27	3.0	0.7	END UD TERMINAL RISER

*UNDERDRAIN DEPTHS MAY VARY +/- 0.5'.

Dist	COUNTY	ROUTE	POST MILES TOTAL PROJECT	SHEET No.	TOTAL SHEETS
01	Hum	96	26.9/R41.1	25	53

REGISTERED CIVIL ENGINEER 03/18/09 DATE

9-21-09
PLANS APPROVAL DATE

REGISTERED PROFESSIONAL ENGINEER TALITHA STIMSON No. C 59258 Exp. 6-30-11 CIVIL STATE OF CALIFORNIA

THE STATE OF CALIFORNIA OR ITS OFFICERS OR AGENTS SHALL NOT BE RESPONSIBLE FOR THE ACCURACY OR COMPLETENESS OF SCANNED COPIES OF THIS PLAN SHEET.

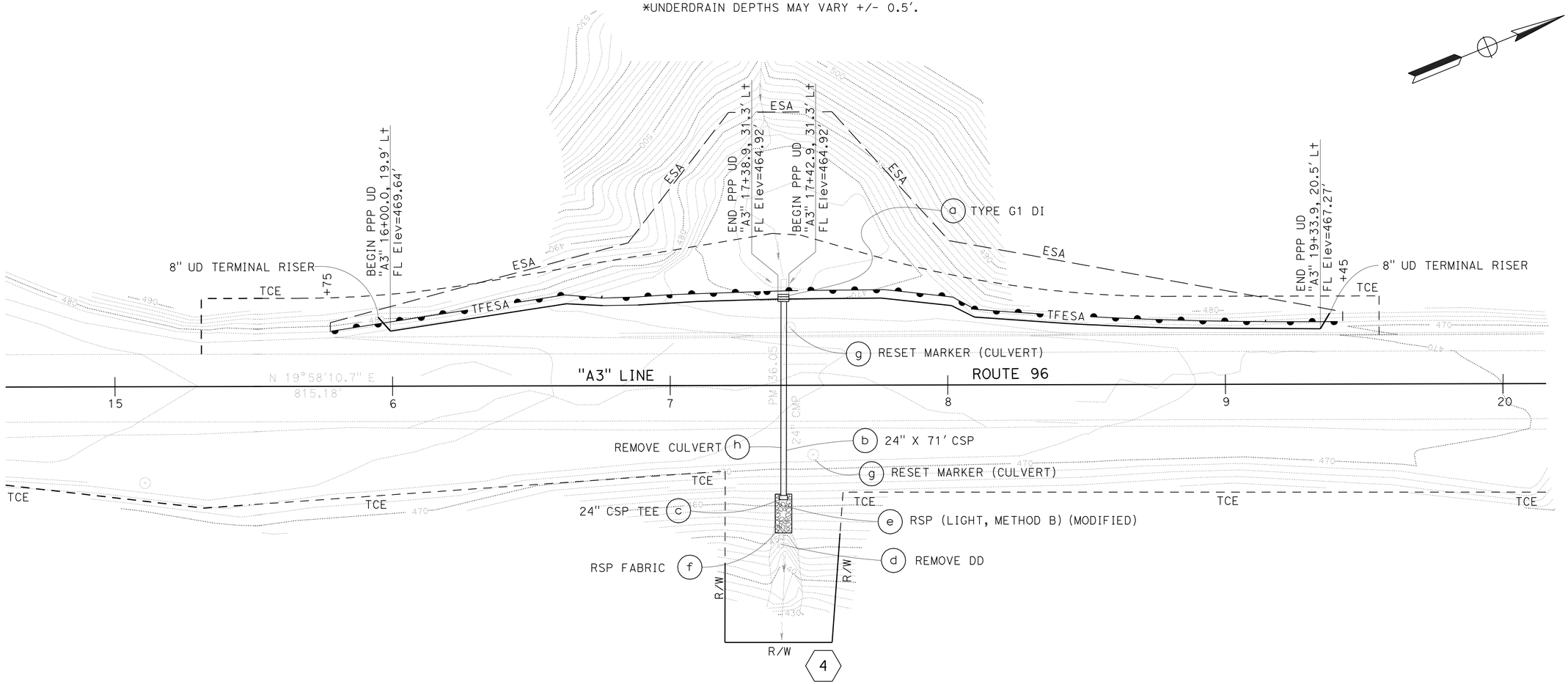

LOCATION 3

← Klamath River ←

THIS PLAN ACCURATE FOR DRAINAGE WORK ONLY.

DRAINAGE PLAN D-5

SCALE: 1"=20'

REVISED BY	DATE REVISED
KRISTINA WALKER	
TALITHA STIMSON	

CALCULATED-DESIGNED BY
CHECKED BY

FUNCTIONAL SUPERVISOR
L.R.ASHLEY

STATE OF CALIFORNIA - DEPARTMENT OF TRANSPORTATION
Caltrans
DESIGN

\\SV01S01\PSESUBMIT\01_472301\147230ia005.dgn

LAST REVISION 03-18-09
DATE PLOTTED => 25-SEP-2009
TIME PLOTTED => 06:25

Dist	COUNTY	ROUTE	POST MILES TOTAL PROJECT	SHEET No.	TOTAL SHEETS
01	Hum	96	26.9/R41.1	26	53

REGISTERED CIVIL ENGINEER 03/18/09 DATE

9-21-09
PLANS APPROVAL DATE

REGISTERED PROFESSIONAL ENGINEER TALITHA STIMSON No. C 59258 Exp. 6-30-11 CIVIL STATE OF CALIFORNIA

THE STATE OF CALIFORNIA OR ITS OFFICERS OR AGENTS SHALL NOT BE RESPONSIBLE FOR THE ACCURACY OR COMPLETENESS OF SCANNED COPIES OF THIS PLAN SHEET.

NOTES:

1. FOR COMPLETE RIGHT OF WAY DATA, SEE RIGHT OF WAY RECORD MAPS AT DISTRICT OFFICE.
2. UNLESS OTHERWISE SPECIFIED, R/W IS ASSUMED AS PRESCRIPTIVE ON USFS PROPERTY.

UNDERDRAIN LOCATIONS

STATION "A5" LINE	OFFSET L+ OF ℄	ORIGINAL GROUND ELEVATION	UNDERDRAIN FLOWLINE ELEVATION	DEPTH*	SLOPE	NOTES
	FT				%	
12+00.0	23.8	644.70	639.10	5.6	-	BEGIN UD TERMINAL RISER
12+56.4	21.7	641.44	635.84	5.6	1.2	
12+97.0	17	639.89	634.29	5.6	1.2	
13+16.5	15.7	639.17	633.57	5.6	1.2	
13+63.9	15.5	636.79	631.19	5.6	1.2	
14+02.4	16.3	634.76	629.16	5.6	1.2	CLEANOUT AT THIS LOCATION
14+74.3	23.3	629.79	624.19	5.6	1.2	
15+63.7	20.6	624.93	619.33	5.6	1.2	
15+85.6	21.8	623.41	617.81	5.6	1.2	
16+52.0	25.5	620.06	614.43	5.6	1.2	END UD OUTLET INTO DI AT PM R41.04

*UNDERDRAIN DEPTHS MAY VARY +/- 0.5'.

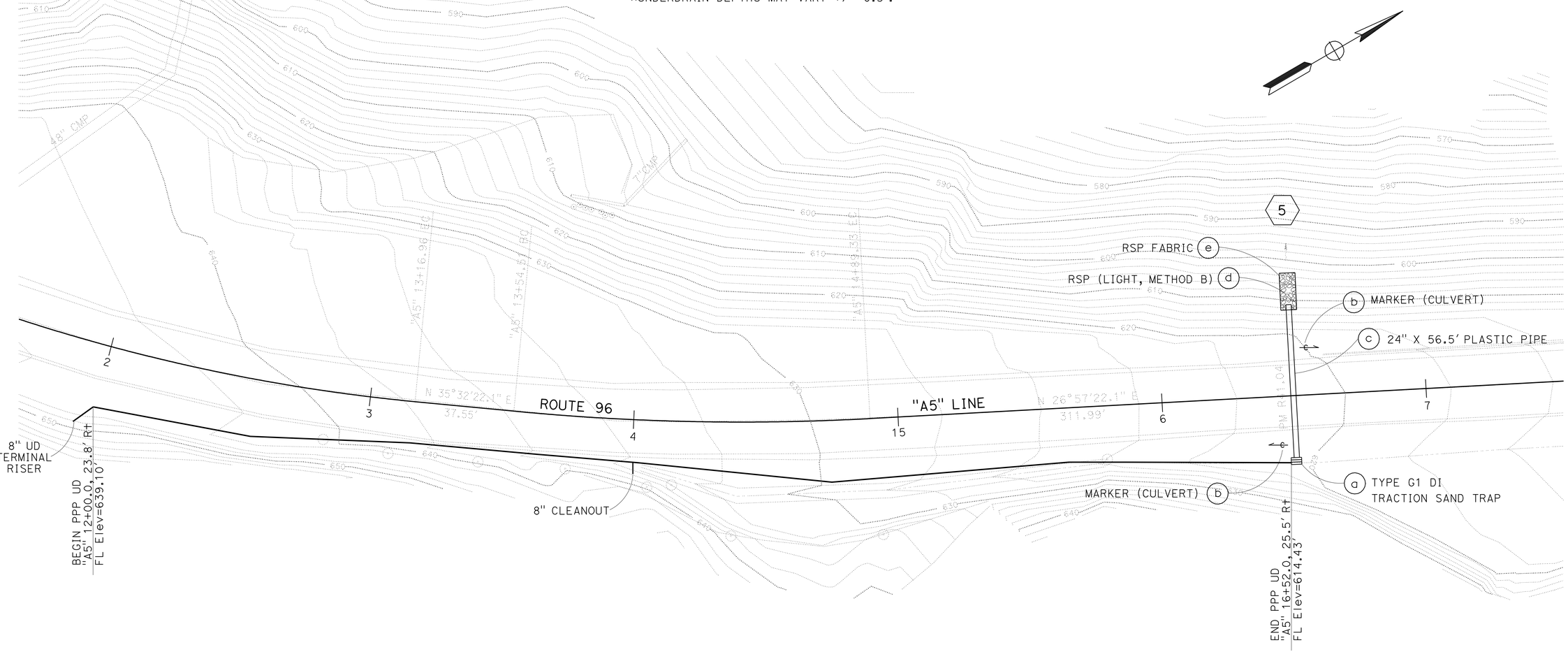

LOCATION 5

THIS PLAN ACCURATE FOR DRAINAGE WORK ONLY.

DRAINAGE PLAN D-6

SCALE: 1"=20'

REVISED BY	DATE REVISED

CALCULATED-DESIGNED BY	KRISTINA WALKER
CHECKED BY	TALITHA STIMSON
FUNCTIONAL SUPERVISOR	L.R.ASHLEY

STATE OF CALIFORNIA - DEPARTMENT OF TRANSPORTATION
Caltrans
DESIGN

\\SV01S01\PSESUBMIT\01_472301(REPLACE)\147230ia006.dgn

LAST REVISION 05-04-09 | DATE PLOTTED => 25-SEP-2009 | TIME PLOTTED => 06:26

Dist	COUNTY	ROUTE	POST MILES TOTAL PROJECT	SHEET No.	TOTAL SHEETS
01	Hum	96	26.9/R41.1	27	53

REGISTERED CIVIL ENGINEER 03/18/09 DATE

9-21-09
PLANS APPROVAL DATE

REGISTERED PROFESSIONAL ENGINEER TALITHA STIMSON No. C 59258 Exp. 6-30-11 CIVIL STATE OF CALIFORNIA

THE STATE OF CALIFORNIA OR ITS OFFICERS OR AGENTS SHALL NOT BE RESPONSIBLE FOR THE ACCURACY OR COMPLETENESS OF SCANNED COPIES OF THIS PLAN SHEET.

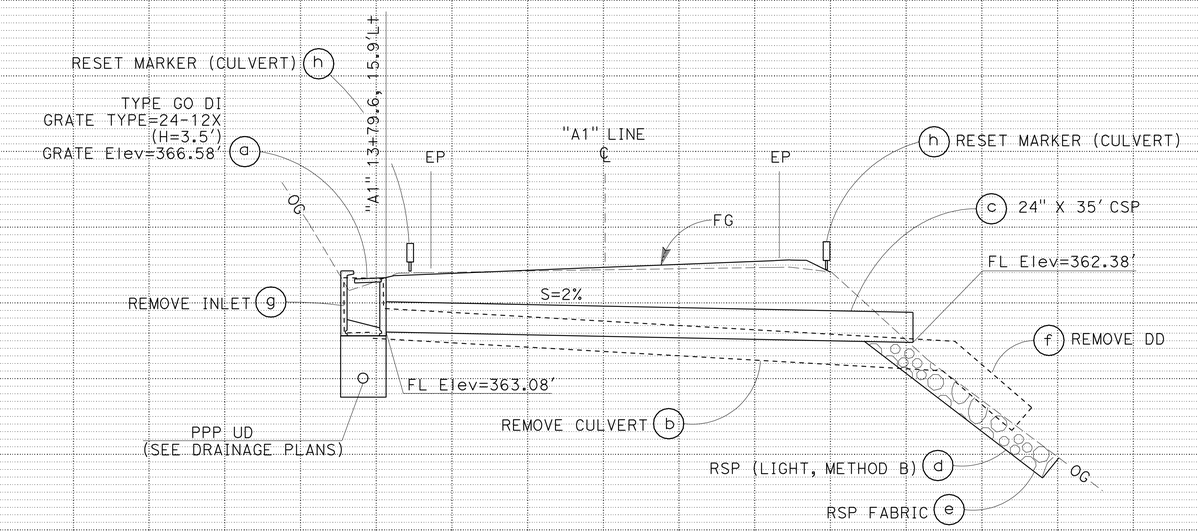

DRAINAGE SYSTEM No. 1

Sta "A1" 13+79.6 PM 27.02
NO SKEW

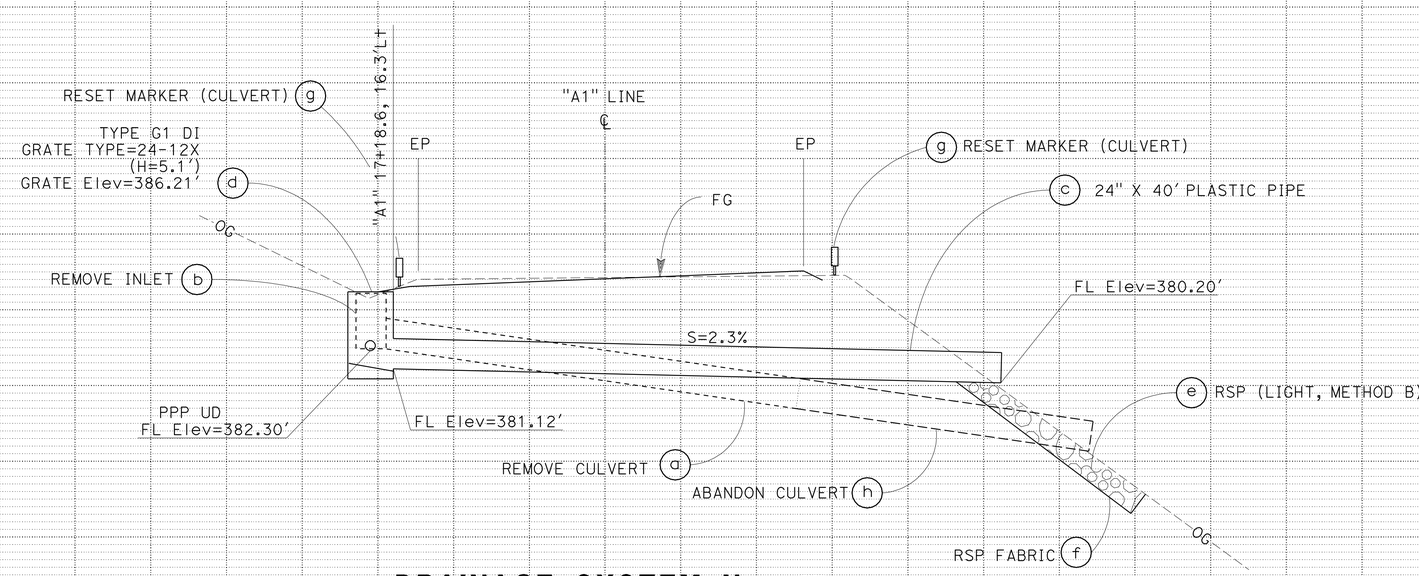

DRAINAGE SYSTEM No. 2

Sta "A1" 17+17.99 PM 27.10
SKEW=2.3° Lt

DRAINAGE PROFILES

SCALE: 1"=5'

DP-1

REVISED BY | DATE REVISED
KRISTINA WALKER | TALITHA STIMSON
CALCULATED-DESIGNED BY | CHECKED BY
FUNCTIONAL SUPERVISOR
L.R.ASHLEY

STATE OF CALIFORNIA - DEPARTMENT OF TRANSPORTATION
DESIGN
Caltrans

LAST REVISION 03-18-09 | DATE PLOTTED => 25-SEP-2009 | TIME PLOTTED => 06:26

\\SV01S01\PSESUBMIT\01_472301\147230ib001.dgn

BORDER LAST REVISED 4/11/2008 | RELATIVE BORDER SCALE IS IN INCHES 0 1 2 3 | USERNAME => trmikesl | DGN FILE => 147230ib001.dgn | CU 03232 | EA 472301

Dist	COUNTY	ROUTE	POST MILES TOTAL PROJECT	SHEET No.	TOTAL SHEETS
01	Hum	96	26.9/R41.1	28	53

REGISTERED CIVIL ENGINEER 03/18/09 DATE

9-21-09
PLANS APPROVAL DATE

REGISTERED PROFESSIONAL ENGINEER TALITHA STIMSON No. C 59258 Exp. 6-30-11 CIVIL STATE OF CALIFORNIA

THE STATE OF CALIFORNIA OR ITS OFFICERS OR AGENTS SHALL NOT BE RESPONSIBLE FOR THE ACCURACY OR COMPLETENESS OF SCANNED COPIES OF THIS PLAN SHEET.

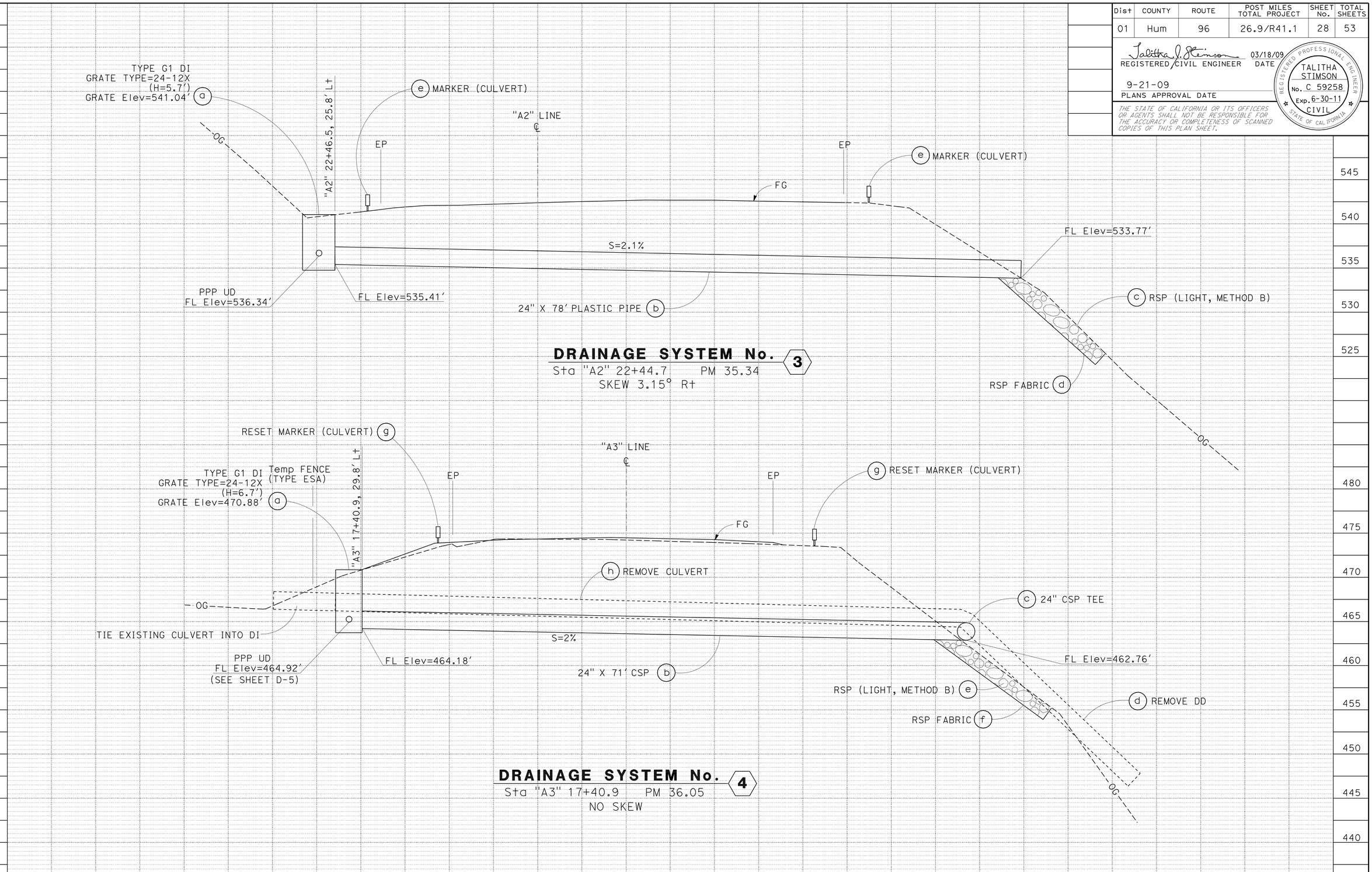

DRAINAGE PROFILES
SCALE: 1"=5'

DP-2

REVISED BY | DATE REVISED
KRISTINA WALKER | TALITHA STIMSON
CALCULATED-DESIGNED BY | CHECKED BY
FUNCTIONAL SUPERVISOR
L.R.ASHLEY

STATE OF CALIFORNIA - DEPARTMENT OF TRANSPORTATION
DESIGN
Caltrans

\\SV01S01\PSESUBMIT\01_472301\1472301b002.dgn

LAST REVISION DATE PLOTTED => 25-SEP-2009
03-18-09 TIME PLOTTED => 06:26

BORDER LAST REVISED 4/11/2008
RELATIVE BORDER SCALE IS IN INCHES 0 1 2 3
USERNAME => trmikesl
DGN FILE => 1472301b002.dgn
CU 03232
EA 472301

Dist	COUNTY	ROUTE	POST MILES TOTAL PROJECT	SHEET No.	TOTAL SHEETS
01	Hum	96	26.9/R41.1	29	53

REGISTERED CIVIL ENGINEER 03/18/09 DATE

9-21-09
PLANS APPROVAL DATE

REGISTERED PROFESSIONAL ENGINEER TALITHA STIMSON No. C 59258 Exp. 6-30-11 CIVIL STATE OF CALIFORNIA

THE STATE OF CALIFORNIA OR ITS OFFICERS OR AGENTS SHALL NOT BE RESPONSIBLE FOR THE ACCURACY OR COMPLETENESS OF SCANNED COPIES OF THIS PLAN SHEET.

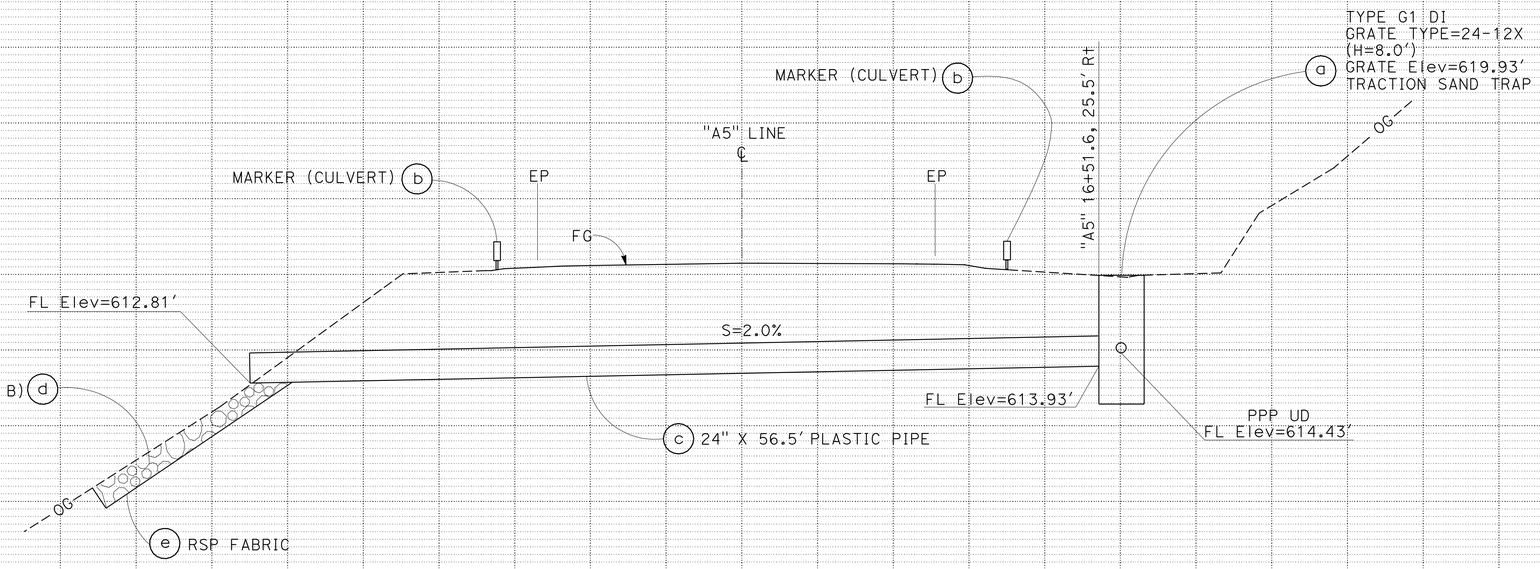

DRAINAGE SYSTEM No. 5

Sta "A5" 16+49.3 PM R41.04
SKEW 6.3° Lt

DRAINAGE PROFILES

SCALE: 1"=5'

DP-3

STATE OF CALIFORNIA - DEPARTMENT OF TRANSPORTATION
Caltrans
DESIGN

CALCULATED-DESIGNED BY KRISTINA WALKER
CHECKED BY TALITHA STIMSON
FUNCTIONAL SUPERVISOR L.R.ASHLEY
REVISED BY
DATE REVISED

\\SV01S01\PSESUBMIT\01_472301(REPLACE)\147230ib003.dgn

LAST REVISION 05-04-09
DATE PLOTTED => 25-SEP-2009
TIME PLOTTED => 06:26

Dist	COUNTY	ROUTE	POST MILES TOTAL PROJECT	SHEET No.	TOTAL SHEETS
01	Hum	96	26.9/R41.1	30	53

REGISTERED CIVIL ENGINEER 03/18/09 DATE

9-21-09
PLANS APPROVAL DATE

REGISTERED PROFESSIONAL ENGINEER TALITHA STIMSON No. C 59258 Exp. 6-30-11 CIVIL STATE OF CALIFORNIA

THE STATE OF CALIFORNIA OR ITS OFFICERS OR AGENTS SHALL NOT BE RESPONSIBLE FOR THE ACCURACY OR COMPLETENESS OF SCANNED COPIES OF THIS PLAN SHEET.

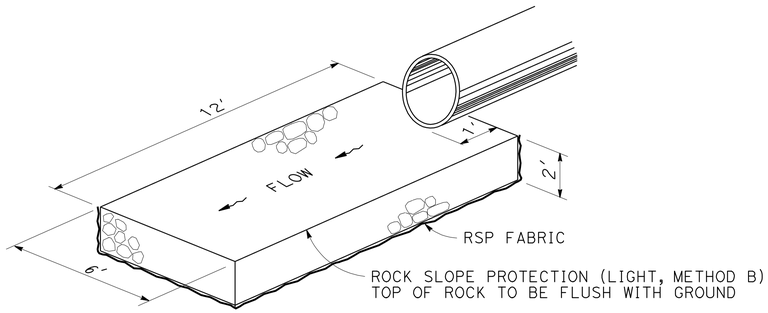

ROCK ENERGY DISSIPATOR AT DRAINAGE OUTLET

DRAINAGE SYSTEM No. 1 2 3 5

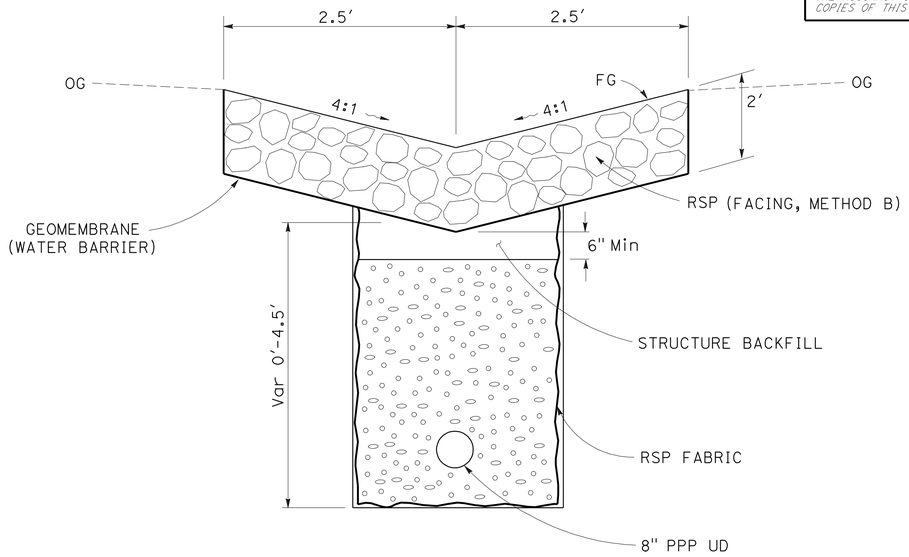

ROCK LINED DITCH

"A1" 12+53.9 TO 13+00.0 ("A1" 12+53.9 TO 12+60.1 WITHOUT UD)
"A2" 20+97.2 TO 22+45.1

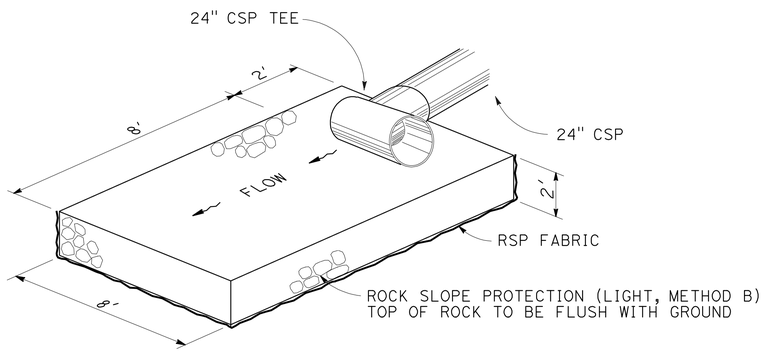

ROCK ENERGY DISSIPATOR (MODIFIED)

DRAINAGE SYSTEM No. 4

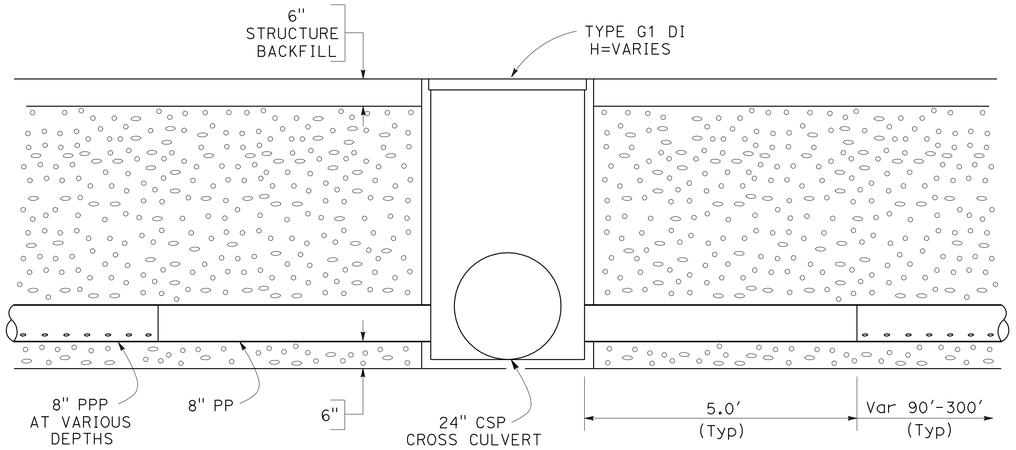

UNDERDRAIN CONNECTION DETAIL

DRAINAGE DETAILS

NO SCALE **DD-1**

REVISED BY | DATE REVISED
KRISTINA WALKER | TALITHA STIMSON
CALCULATED-DESIGNED BY | CHECKED BY
FUNCTIONAL SUPERVISOR
L.R.ASHLEY

STATE OF CALIFORNIA - DEPARTMENT OF TRANSPORTATION
Caltrans®
DESIGN

\\SV01S01\PSESUBMIT\01_472301\147230ic001.dgn

LAST REVISION 03-18-09 | DATE PLOTTED => 25-SEP-2009 | TIME PLOTTED => 06:26

Dist	COUNTY	ROUTE	POST MILES TOTAL PROJECT	SHEET No.	TOTAL SHEETS
01	Hum	96	26.9/R41.1	31	53

REGISTERED CIVIL ENGINEER 03/18/09 DATE

9-21-09
PLANS APPROVAL DATE

REGISTERED PROFESSIONAL ENGINEER TALITHA STIMSON No. C 59258 Exp. 6-30-11 CIVIL STATE OF CALIFORNIA

THE STATE OF CALIFORNIA OR ITS OFFICERS OR AGENTS SHALL NOT BE RESPONSIBLE FOR THE ACCURACY OR COMPLETENESS OF SCANNED COPIES OF THIS PLAN SHEET.

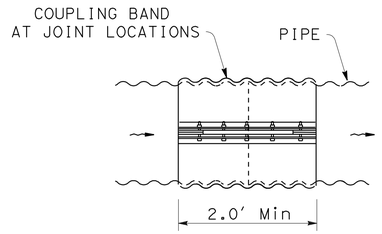

COUPLING BAND

NOTES:

1. USE ON ALL CSP CULVERTS, DOWNDRAINS AND CROSS DRAIN LOCATIONS.
2. USE STANDARD DETAIL D-97A, ALTERNATIVE B.
3. USE MINIMUM OF 24" COUPLER BANDS.

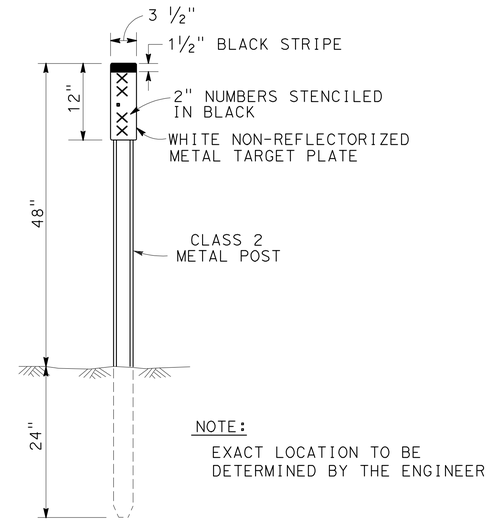

MARKER (CULVERT)

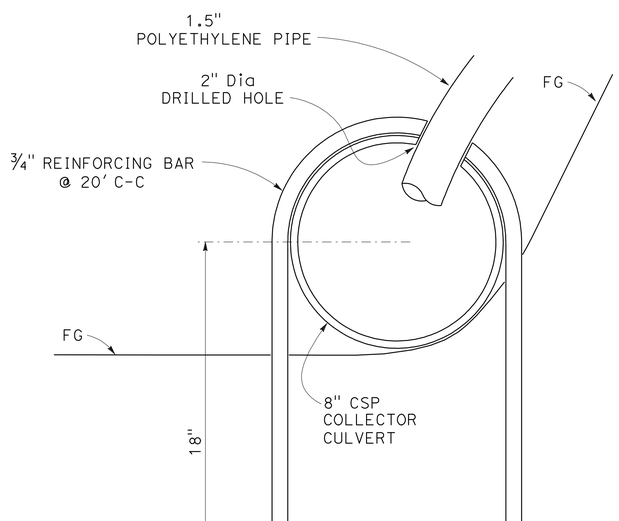

8" COLLECTOR SYSTEM (HORIZONTAL DRAIN)

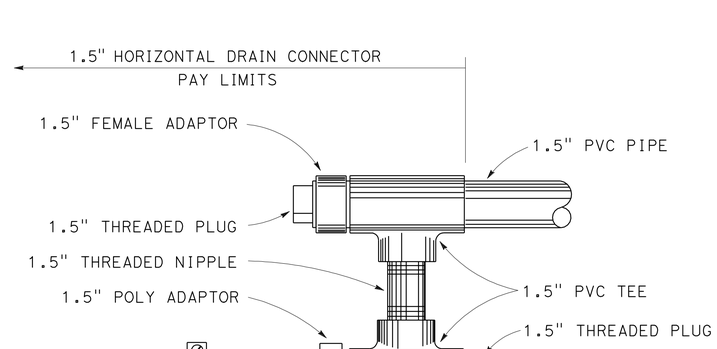

HORIZONTAL DRAIN CONNECTOR UNIT

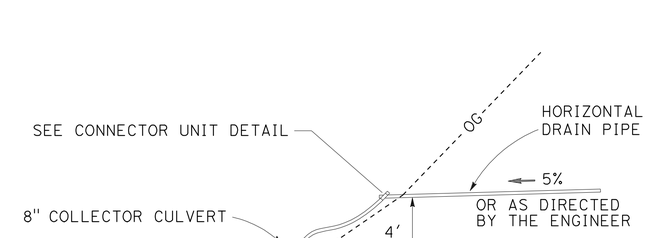

HORIZONTAL DRAIN INSTALLATION

DRAINAGE DETAILS

NO SCALE **DD-2**

STATE OF CALIFORNIA - DEPARTMENT OF TRANSPORTATION
Caltrans® DESIGN

FUNCTIONAL SUPERVISOR: L.R.ASHLEY
CALCULATED-DESIGNED BY: KRISTINA WALKER
CHECKED BY: TALITHA STIMSON
REVISED BY / DATE REVISED

\\SV01S01\PSESUBMIT\01_472301\147230ic002.dgn

LAST REVISION 03-18-09 | DATE PLOTTED => 25-SEP-2009 | TIME PLOTTED => 06:26

Dist	COUNTY	ROUTE	POST MILES TOTAL PROJECT	SHEET No.	TOTAL SHEETS
01	Hum	96	26.9/R41.1	32	53

REGISTERED CIVIL ENGINEER 03/18/09 DATE

9-21-09
PLANS APPROVAL DATE

REGISTERED PROFESSIONAL ENGINEER TALITHA STIMSON No. C 59258 Exp. 6-30-11 CIVIL STATE OF CALIFORNIA

THE STATE OF CALIFORNIA OR ITS OFFICERS OR AGENTS SHALL NOT BE RESPONSIBLE FOR THE ACCURACY OR COMPLETENESS OF SCANNED COPIES OF THIS PLAN SHEET.

NOTES:
1. ALL CULVERT JOINTS SHALL BE POSITIVE.
2. LENGTHS OF PIPES, DOWNDRAINS AND ANGLES OF ELBOWS SHALL BE VERIFIED IN THE FIELD BY THE CONTRACTOR.
3. PLASTIC PIPE SHALL BE SMOOTH INTERIOR WALL TYPE WITH WATER TIGHT JOINTS.

DRAINAGE SUMMARY TABLE

POSTMILE	SYSTEM NUMBER	DRAINAGE UNIT	REMOVE CULVERT	REMOVE INLET	REMOVE DOWNDRAIN	ABANDON CULVERT	RESET MARKER	MARKER (CULVERT)	MINOR CONCRETE (MINOR STRUCTURE)	24" PLASTIC PIPE	24" CORRUGATED STEEL PIPE (0.138" THICK)	24" CSP TEE	Misc IRON AND STEEL	RSP (LIGHT, METHOD B)	RSP FABRIC	INLET HEIGHT "H" (N)	REMARKS	SYSTEM NUMBER	DRAINAGE UNIT
			EA	EA	EA	EA	EA	EA	CY	LF	LF	EA	LB	CY	SQFT	LF			
(PM 27.02)	1	a							1.36				239			3.5	TYPE GO DI, GRATE=24-12X	1	a
		b	1														24" X 38' CSP		b
		c									35								c
		d												5.3			ROCK ENERGY DISSIPATOR (SHEET DD-1)		d
		e													120				e
		f			1												24" X 10' CSP		f
		g		1															g
		h					2												h
(PM 27.10)	2	a	1														24" X 29' CSP	2	a
		b		1															b
		c								40.0									c
		d							1.41				239			5.1	TYPE G1 DI, GRATE=24-12X		d
		e												5.3			ROCK ENERGY DISSIPATOR (SHEET DD-1)		e
		f													120				f
		g					2												g
		h				1											24" X 19' CSP		h
(PM 35.34)	3	a							1.54				239			5.7	TYPE G1 DI, GRATE=24-12X	3	a
		b								78.0									b
		c												5.3			ROCK ENERGY DISSIPATOR (SHEET DD-1)		c
		d													120				d
		e						2									STENCIL "PM 35.34"		e
(PM 36.05)	4	a							1.96				239			6.7	TYPE G1 DI GRATE=24-12X	4	a
		b									71								b
		c										1							c
		d			1												24" X 30' DD		d
		e												5.9			ROCK ENERGY DISSIPATOR (MODIFIED) (SHEET DD-1)		e
		f													120				f
		g					2												g
		h	1														24" X 78' CSP		h
(PM R41.04)	5	a							2.05				239			8.0	TYPE G1 DI, GRATE=24-12X - TRACTION SAND TRAP	5	a
		b						2									STENCIL "PM R41.04"		b
		c								56.5									c
		d												5.3			ROCK ENERGY DISSIPATOR (SHEET DD-1)		d
		e													120				e
	TOTAL		3	2	2	1	6	4	8.32	174.5	106	1	1195	27.1	600				

(N) - NOT A SEPARATE PAY ITEM, FOR INFORMATION ONLY.

DRAINAGE QUANTITIES
DQ-1

REVISED BY | DATE REVISED
KRISTINA WALKER | TALITHA STIMSON
CALCULATED-DESIGNED BY | CHECKED BY
FUNCTIONAL SUPERVISOR
L.R.ASHLEY

STATE OF CALIFORNIA - DEPARTMENT OF TRANSPORTATION
Caltrans
DESIGN

\\SV01S01\PSESUBMIT\01_472301(REPLACE)\147230id001.dgn

LAST REVISION 05-04-09 | DATE PLOTTED => 25-SEP-2009 | TIME PLOTTED => 06:27

Dist	COUNTY	ROUTE	POST MILES TOTAL PROJECT	SHEET No.	TOTAL SHEETS
01	Hum	96	26.9/R41.1	33	53

REGISTERED CIVIL ENGINEER 03/18/09 DATE

9-21-09
PLANS APPROVAL DATE

REGISTERED PROFESSIONAL ENGINEER TALITHA STIMSON No. C 59258 Exp. 6-30-11 CIVIL STATE OF CALIFORNIA

THE STATE OF CALIFORNIA OR ITS OFFICERS OR AGENTS SHALL NOT BE RESPONSIBLE FOR THE ACCURACY OR COMPLETENESS OF SCANNED COPIES OF THIS PLAN SHEET.

UNDERDRAIN SUMMARY

LOCATION	(STATION) FROM	(STATION) TO	L†/R†	8" PP TERMINAL RISER	8" PPP	8" PP CLEANOUT	REMARKS
				LF	LF	LF	
1	"A1" 12+60.1	"A1" 15+38.0	L†	8.5	283	-	OUTLET INTO DITCH (FLOWS UNDER DI AT PM 27.02)
1	"A1" 17+18.3	"A1" 21+73.7	L†	8.5	458	8.5	TIES INTO DI AT PM 27.10
1	"A1" 25+23.9	"A1" 27+35.7	L†	6.6	209	-	TIES INTO DI AT PM 27.20, EXISTING UD
2	"A2" 21+97.2	"A2" 22+45.1	L†	6.1	148	-	TIES INTO DI AT PM 35.34
3	"A3" 16+00.0	"A3" 17+38.9	L†	8	145	-	TIES INTO DI AT PM 36.05
3	"A3" 17+42.9	"A3" 19+33.9	L†	5	116	-	TIES INTO DI AT PM 36.05
5	"A5" 12+00.0	"A5" 16+52.0	R†	7.6	459	7.6	TIES INTO DI AT PM R41.04, EXISTING UD
			SUB TOTAL	50.3	1818	16.1	
			TOTAL		1884.4		

HORIZONTAL DRAIN SUMMARY

LOCATION (STATION)	FURNISH AND INSTALL DRAIN PIPE (HORIZONTAL DRAIN)	DRILL HOLE (HORIZONTAL DRAIN)	8" COLLECTOR SYSTEM (HORIZONTAL DRAIN)	HORIZONTAL DRAIN COLLECTOR UNIT
	LF	LF	LF	EA
"A2" 21+20 TO "A2" 22+45	1320	1260	130	12
TOTAL	1320	1260	130	12

ROCK LINED DITCHES

LOCATION	SIDE OF ROADWAY	START STATION	START FLOWLINE ELEVATION	END STATION	END FLOWLINE ELEVATION	(N) LENGTH	RSP (FACING, METHOD B)	GEOMEMBRANE (WATER BARRIER)
						LF	CY	SQFT
1	L†	"A1" 12+53.9	353.10	"A1" 13+00.0		53.3	24.5	384
2	L†	"A2" 20+97.2	543.79	"A2" 22+45.1	540.44	148.0	68.0	1065
						TOTAL	92.5	1449

(N) - NOT A SEPARATE PAY ITEM, FOR INFORMATION ONLY.

DRAINAGE QUANTITIES
DQ-2

REVISED BY | DATE REVISED
KRISTINA WALKER | TALITHA STIMSON
CALCULATED-DESIGNED BY | CHECKED BY
FUNCTIONAL SUPERVISOR
L.R.ASHLEY

STATE OF CALIFORNIA - DEPARTMENT OF TRANSPORTATION
Caltrans
DESIGN

\\SV01S01\PSESUBMIT\01_472301\147230id002.dgn

LAST REVISION 03-18-09 | DATE PLOTTED => 25-SEP-2009 | TIME PLOTTED => 06:27

Dist	COUNTY	ROUTE	POST MILES TOTAL PROJECT	SHEET No.	TOTAL SHEETS
01	Hum	96	26.9/R41.1	34	53

REGISTERED CIVIL ENGINEER 03/18/09 DATE

9-21-09
PLANS APPROVAL DATE

REGISTERED PROFESSIONAL ENGINEER TALITHA STIMSON No. C 59258 Exp. 6-30-11 CIVIL STATE OF CALIFORNIA

THE STATE OF CALIFORNIA OR ITS OFFICERS OR AGENTS SHALL NOT BE RESPONSIBLE FOR THE ACCURACY OR COMPLETENESS OF SCANNED COPIES OF THIS PLAN SHEET.

STATIONARY MOUNTED CONSTRUCTION AREA SIGNS

SIGN NO.	SIGN CODE	PANEL SIZE (inches)	SIGN MESSAGE	NO. OF POSTS & SIZE (inches)	NO. OF SIGNS
A	W20-1	48 x 48	ROAD WORK AHEAD	1- 6 x 6	6
B	W16-1	36 x 24	SHARE THE ROAD	1- 4 x 4	6
	W11-1	24 x 24	BICYCLE SYMBOL		
C	G20-2	36 x 18	END ROAD WORK	1- 4 x 4	6
D	W20-1	36 x 36	ROAD WORK AHEAD	1- 4 x 4	2

NOTE: EXACT SIGN LOCATIONS TO BE DETERMINED BY THE ENGINEER.

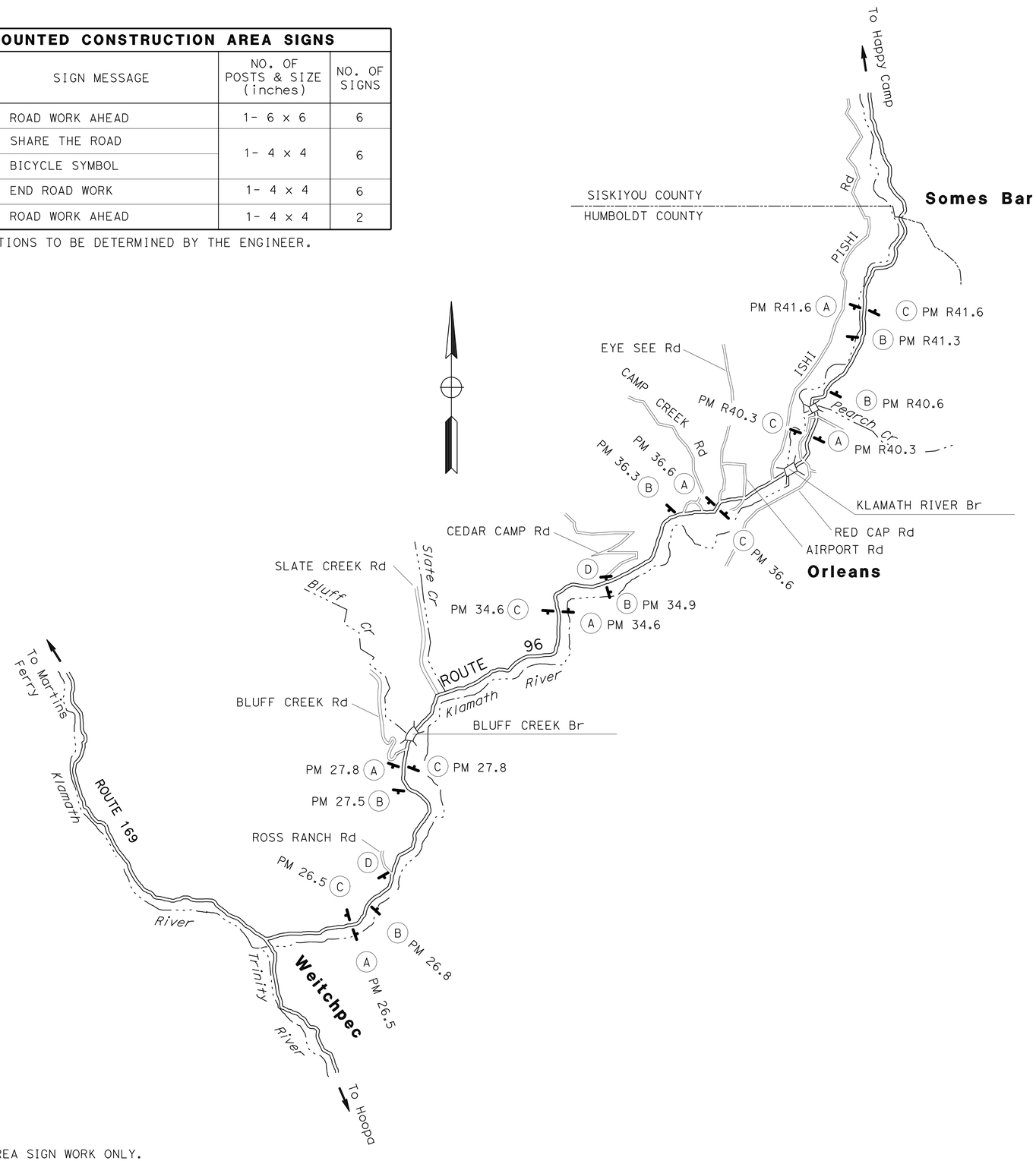

THIS PLAN ACCURATE FOR CONSTRUCTION AREA SIGN WORK ONLY.

CONSTRUCTION AREA SIGNS
CS-1

NO SCALE

REVISED BY | DATE REVISED

BIJAN SAMRAD | TALITHA STIMSON

CALCULATED-DESIGNED BY | CHECKED BY

FUNCTIONAL SUPERVISOR: L.R.ASHLEY

STATE OF CALIFORNIA - DEPARTMENT OF TRANSPORTATION

Caltrans® DESIGN

\\SV01S01\PSESUBMIT\01_472301\1472301a001.dgn

LAST REVISION 03-18-09 | DATE PLOTTED => 25-SEP-2009 | TIME PLOTTED => 06:27

Dist	COUNTY	ROUTE	POST MILES TOTAL PROJECT	SHEET No.	TOTAL SHEETS
01	Hum	96	26.9/R41.1	35	53

REGISTERED CIVIL ENGINEER 03/18/09 DATE

9-21-09
PLANS APPROVAL DATE

REGISTERED PROFESSIONAL ENGINEER TALITHA STIMSON No. C 59258 Exp. 6-30-11 CIVIL STATE OF CALIFORNIA

THE STATE OF CALIFORNIA OR ITS OFFICERS OR AGENTS SHALL NOT BE RESPONSIBLE FOR THE ACCURACY OR COMPLETENESS OF SCANNED COPIES OF THIS PLAN SHEET.

LEGEND:

STRIPING DETAIL

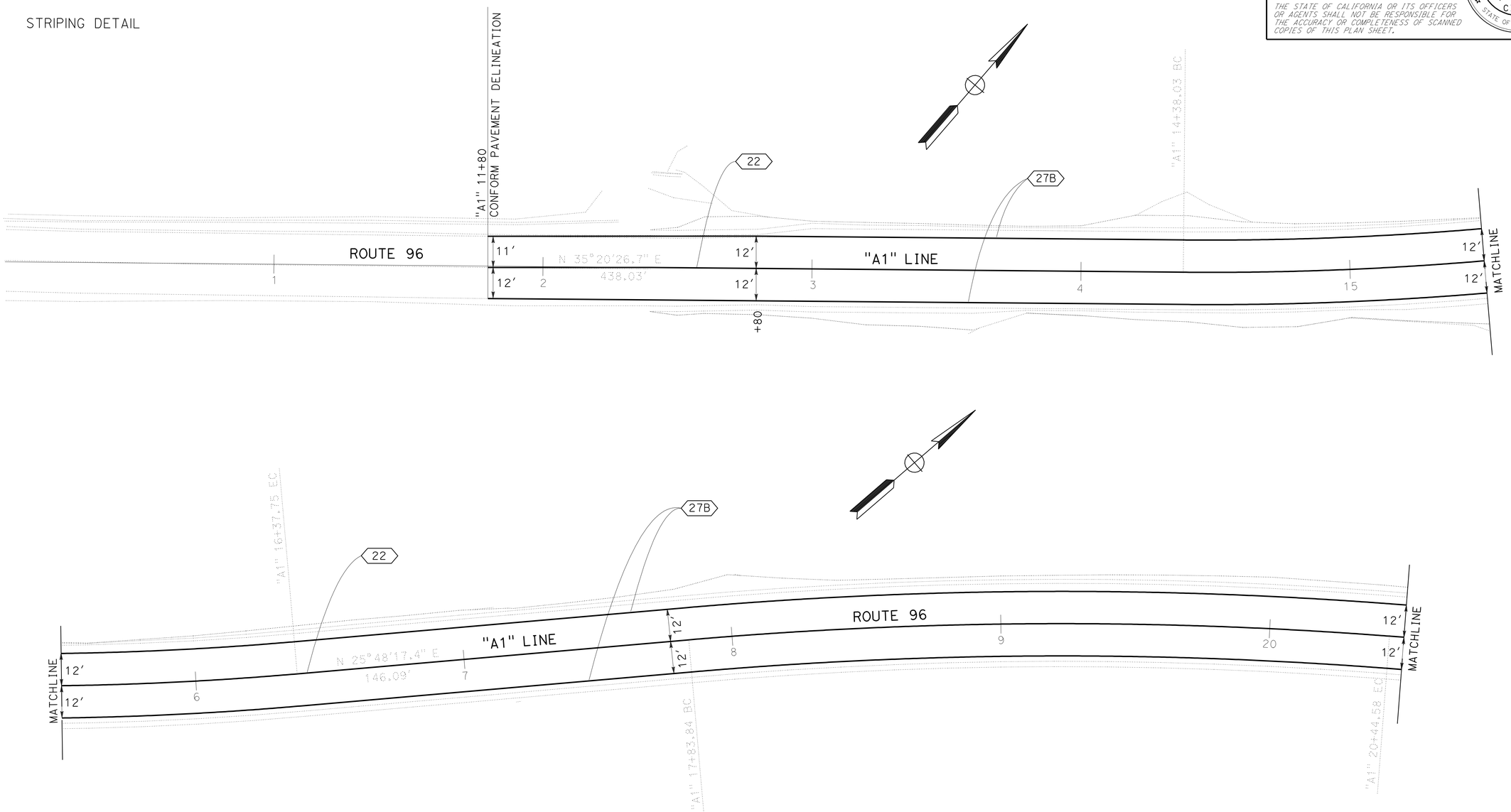

LOCATION 1

THIS PLAN ACCURATE FOR PAVEMENT DELINEATION WORK ONLY.

PAVEMENT DELINEATION
PD-1

SCALE: 1'=20'

REVISED BY	DATE REVISED

CALCULATED-DESIGNED BY	BIJAN SAMRAD
CHECKED BY	TALITHA STIMSON

FUNCTIONAL SUPERVISOR: L.R.ASHLEY

STATE OF CALIFORNIA - DEPARTMENT OF TRANSPORTATION
Caltrans
DESIGN

\\SV01S01\PSESUBMIT\01_472301\147230na001.dgn

LAST REVISION 03-18-09 | DATE PLOTTED => 25-SEP-2009 | TIME PLOTTED => 06:27

Dist	COUNTY	ROUTE	POST MILES TOTAL PROJECT	SHEET No.	TOTAL SHEETS
01	Hum	96	26.9/R41.1	36	53

REGISTERED CIVIL ENGINEER 03/18/09 DATE

9-21-09
PLANS APPROVAL DATE

REGISTERED PROFESSIONAL ENGINEER TALITHA STIMSON No. C 59258 Exp. 6-30-11 CIVIL STATE OF CALIFORNIA

THE STATE OF CALIFORNIA OR ITS OFFICERS OR AGENTS SHALL NOT BE RESPONSIBLE FOR THE ACCURACY OR COMPLETENESS OF SCANNED COPIES OF THIS PLAN SHEET.

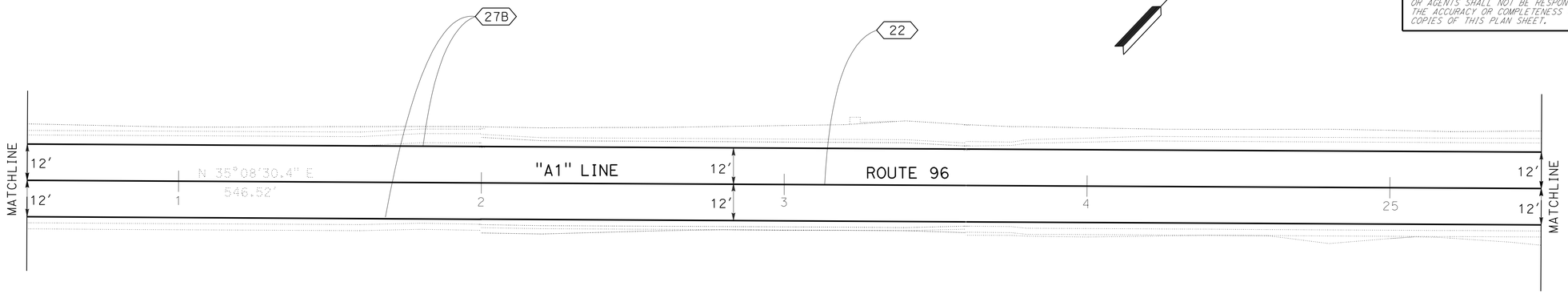

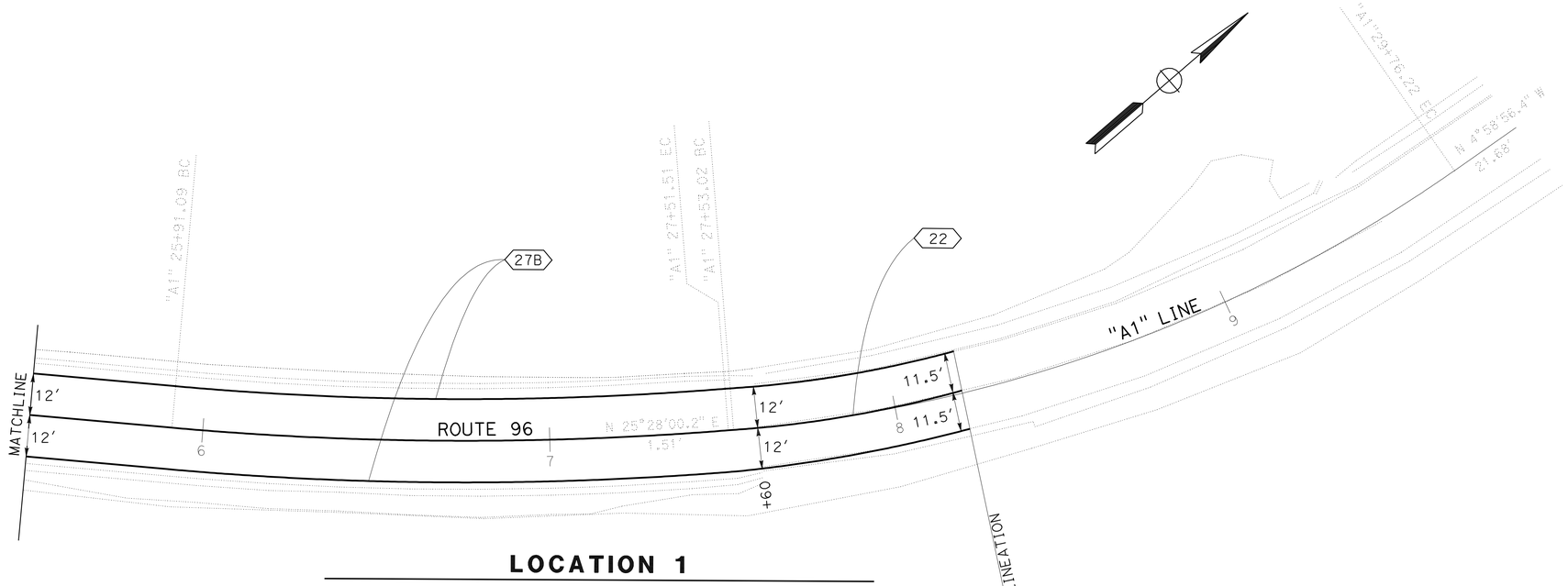

LOCATION 1

THIS PLAN ACCURATE FOR PAVEMENT DELINEATION WORK ONLY.

PAVEMENT DELINEATION
PD-2

SCALE: 1′=20′

REVISED BY	DATE REVISED

CALCULATED-DESIGNED BY	BIJAN SAMRAD
CHECKED BY	TALITHA STIMSON
FUNCTIONAL SUPERVISOR	L.R.ASHLEY

STATE OF CALIFORNIA - DEPARTMENT OF TRANSPORTATION
Caltrans
DESIGN

\\SV01S01\PSESUBMIT\01_472301\147230na002.dgn

LAST REVISION 03-18-09 | DATE PLOTTED => 25-SEP-2009 | TIME PLOTTED => 06:27

Dist	COUNTY	ROUTE	POST MILES TOTAL PROJECT	SHEET No.	TOTAL SHEETS
01	Hum	96	26.9/R41.1	37	53

REGISTERED CIVIL ENGINEER 03/18/09 DATE

9-21-09
PLANS APPROVAL DATE

REGISTERED PROFESSIONAL ENGINEER TALITHA STIMSON No. C 59258 Exp. 6-30-11 CIVIL STATE OF CALIFORNIA

THE STATE OF CALIFORNIA OR ITS OFFICERS OR AGENTS SHALL NOT BE RESPONSIBLE FOR THE ACCURACY OR COMPLETENESS OF SCANNED COPIES OF THIS PLAN SHEET.

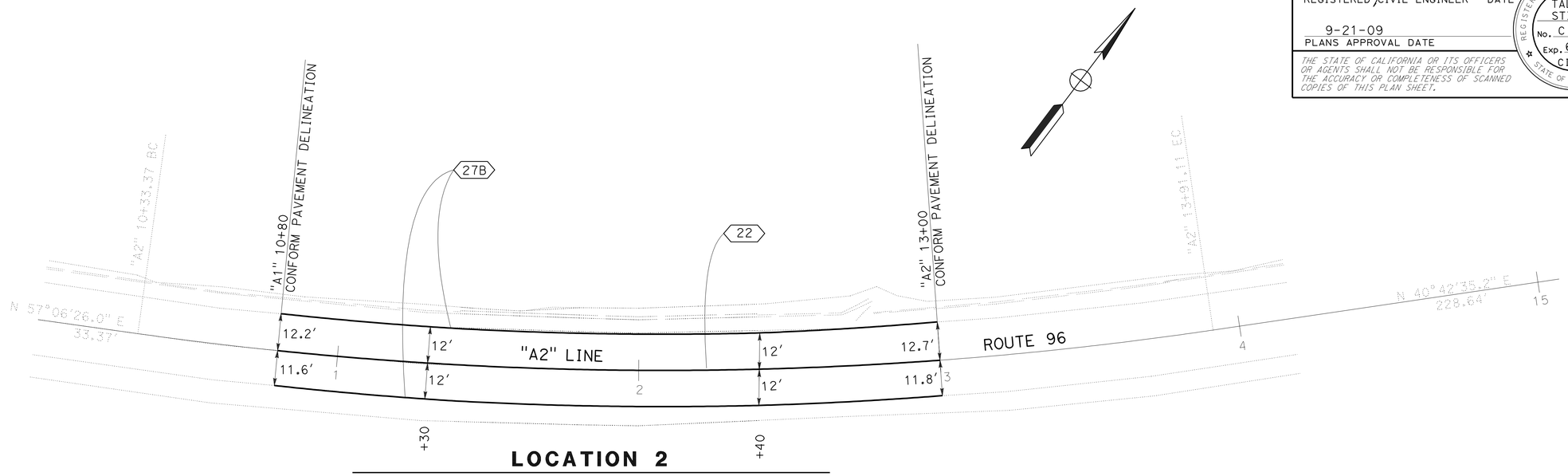

LOCATION 2

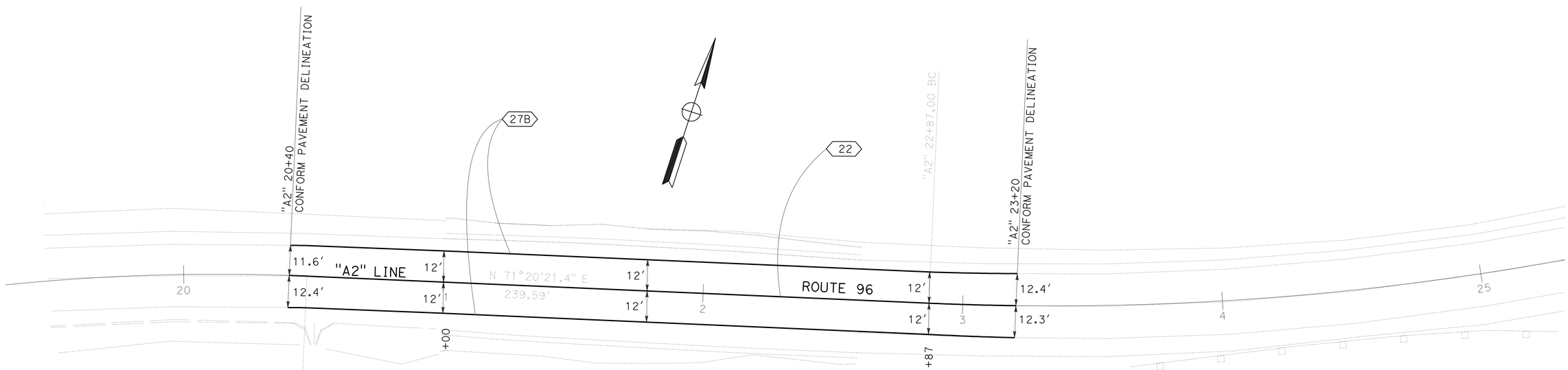

LOCATION 2

THIS PLAN ACCURATE FOR PAVEMENT DELINEATION WORK ONLY.

PAVEMENT DELINEATION
PD-3

SCALE: 1'=20'

REVISED BY	DATE REVISED

CALCULATED-DESIGNED BY: BIJAN SAMRAD
CHECKED BY: TALITHA STIMSON
FUNCTIONAL SUPERVISOR: L.R.ASHLEY

STATE OF CALIFORNIA - DEPARTMENT OF TRANSPORTATION
Caltrans
DESIGN

\\SV01S01\PSESUBMIT\01_472301\147230na003.dgn

LAST REVISION 03-18-09 | DATE PLOTTED => 26-SEP-2009 | TIME PLOTTED => 06:27

BORDER LAST REVISED 4/11/2008 | RELATIVE BORDER SCALE IS IN INCHES 0 1 2 3 | USERNAME => trmikesl | DGN FILE => 147230na003.dgn | CU 03232 | EA 472301

Dist	COUNTY	ROUTE	POST MILES TOTAL PROJECT	SHEET No.	TOTAL SHEETS
01	Hum	96	26.9/R41.1	38	53

REGISTERED CIVIL ENGINEER 03/18/09 DATE

9-21-09
PLANS APPROVAL DATE

REGISTERED PROFESSIONAL ENGINEER TALITHA STIMSON No. C 59258 Exp. 6-30-11 CIVIL STATE OF CALIFORNIA

THE STATE OF CALIFORNIA OR ITS OFFICERS OR AGENTS SHALL NOT BE RESPONSIBLE FOR THE ACCURACY OR COMPLETENESS OF SCANNED COPIES OF THIS PLAN SHEET.

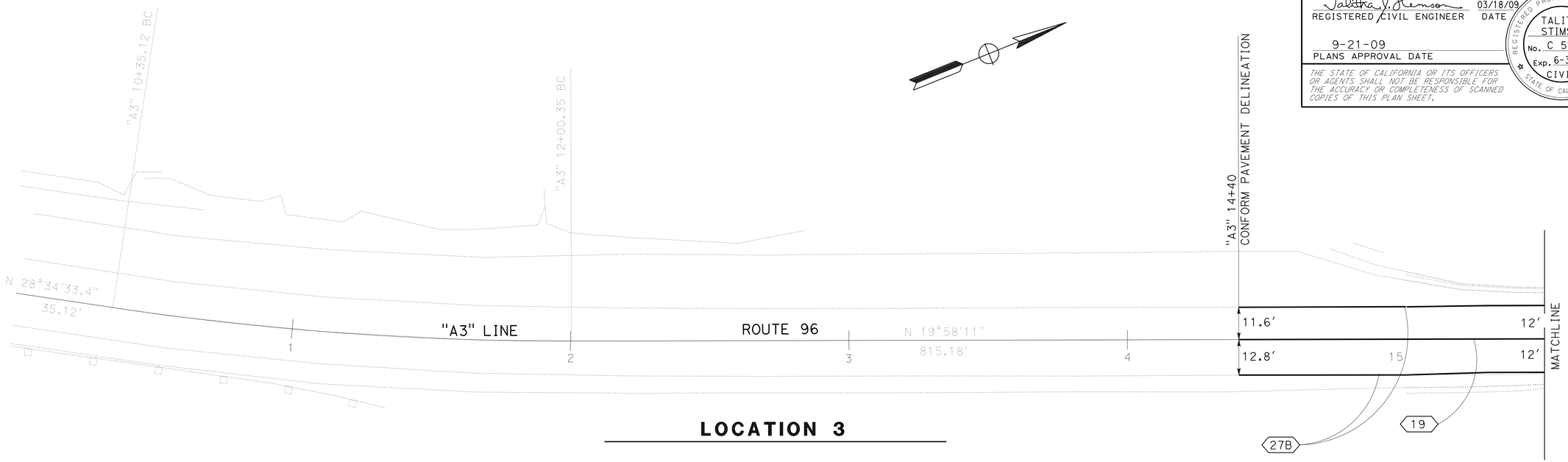

LOCATION 3

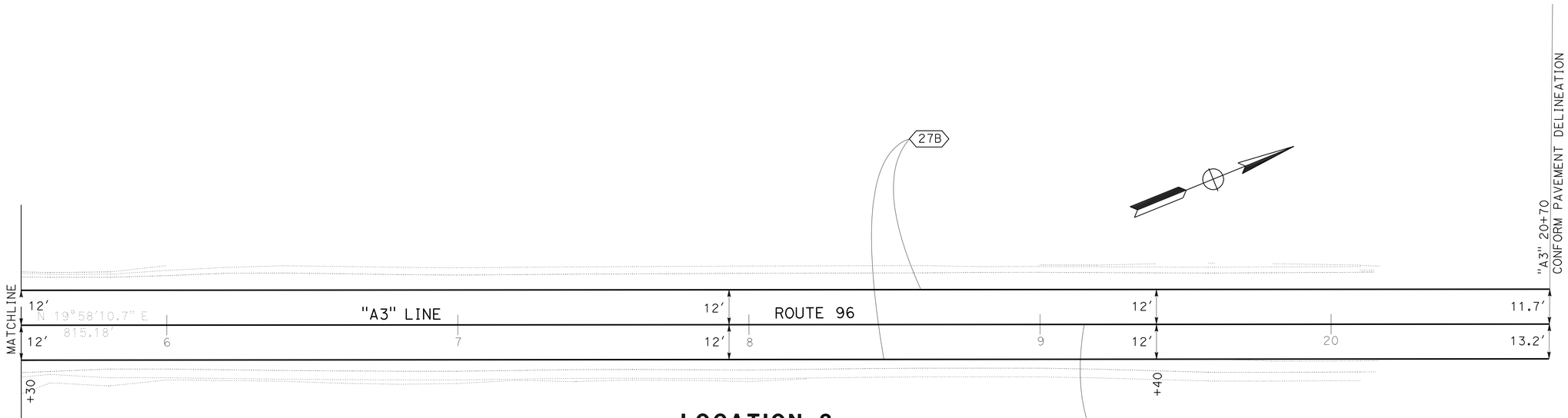

LOCATION 3

THIS PLAN ACCURATE FOR PAVEMENT DELINEATION WORK ONLY.

PAVEMENT DELINEATION
PD-4

SCALE: 1'=20'

REVISED BY	DATE REVISED

BIJAN SAMRAD
TALITHA STIMSON
CALCULATED-DESIGNED BY
CHECKED BY
FUNCTIONAL SUPERVISOR
L.R.ASHLEY

STATE OF CALIFORNIA - DEPARTMENT OF TRANSPORTATION
Caltrans
DESIGN

\\SV01S01\PSESUBMITT\01_472301\147230na004.dgn

LAST REVISION 03-18-09
DATE PLOTTED => 25-SEP-2009
TIME PLOTTED => 06:27

Dist	COUNTY	ROUTE	POST MILES TOTAL PROJECT	SHEET No.	TOTAL SHEETS
01	Hum	96	26.9/R41.1	39	53

Talitha J. Stimson 03/18/09
REGISTERED CIVIL ENGINEER DATE

9-21-09
PLANS APPROVAL DATE

REGISTERED PROFESSIONAL ENGINEER
TALITHA STIMSON
No. C 59258
Exp. 6-30-11
CIVIL
STATE OF CALIFORNIA

THE STATE OF CALIFORNIA OR ITS OFFICERS OR AGENTS SHALL NOT BE RESPONSIBLE FOR THE ACCURACY OR COMPLETENESS OF SCANNED COPIES OF THIS PLAN SHEET.

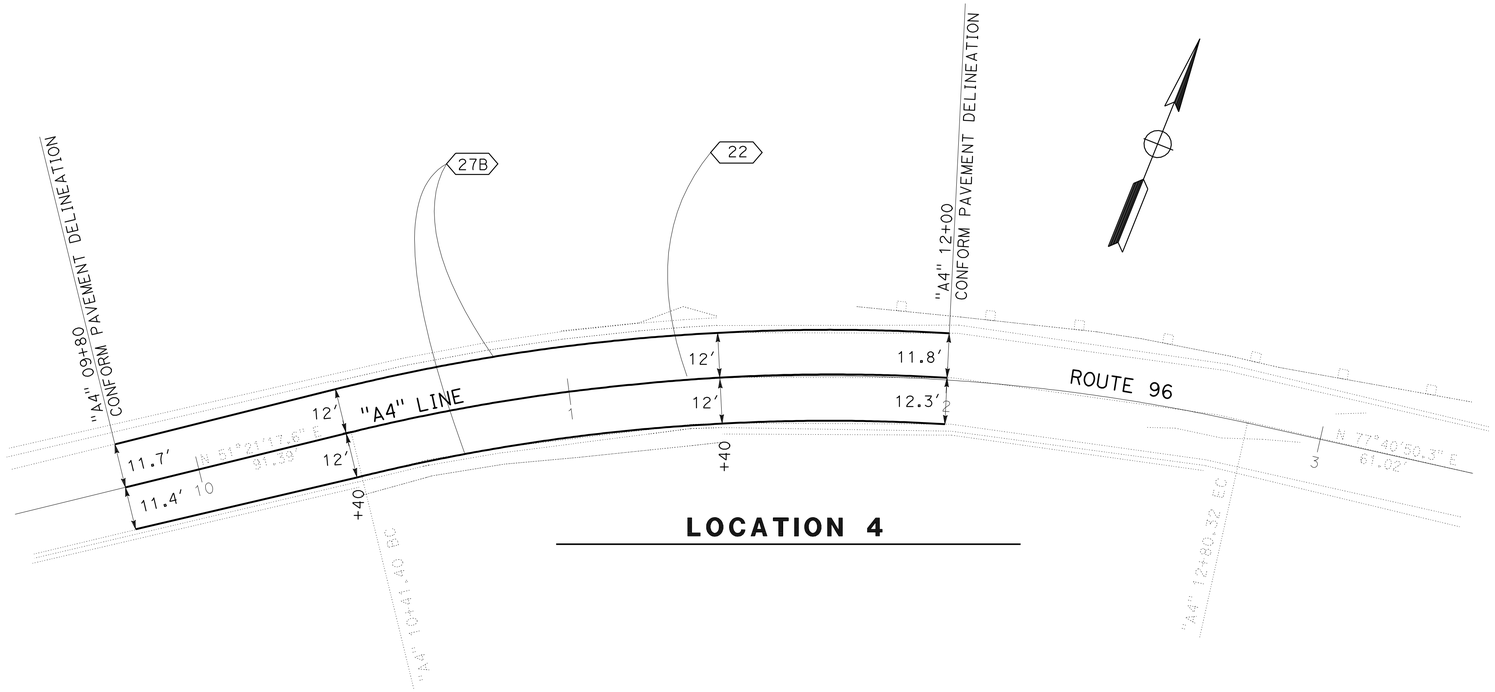

LOCATION 4

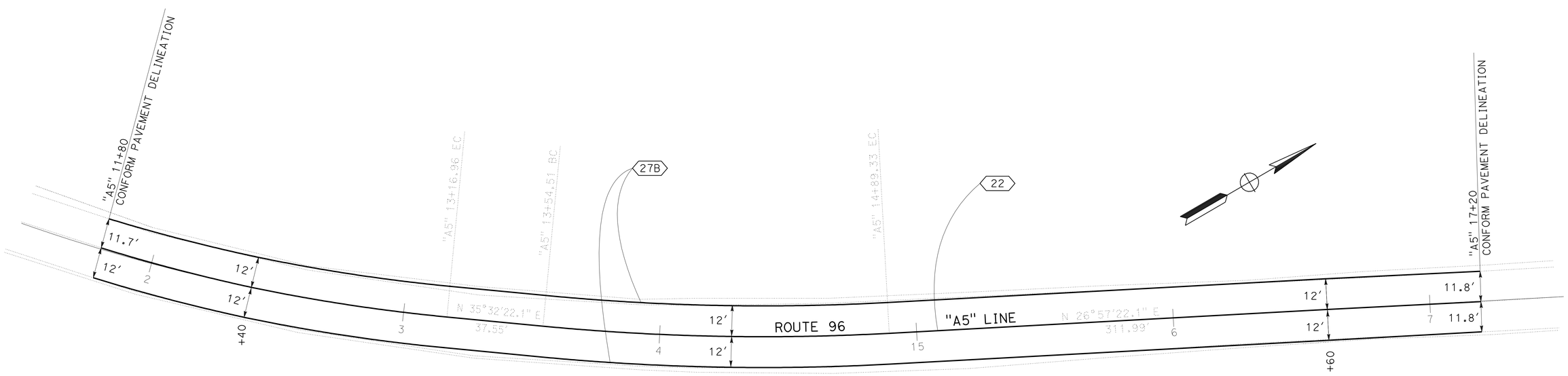

LOCATION 5

THIS PLAN ACCURATE FOR PAVEMENT DELINEATION WORK ONLY.

PAVEMENT DELINEATION
PD-5

SCALE: 1'=20'

REVISED BY	DATE REVISED

CALCULATED-DESIGNED BY	BIJAN SAMRAD
CHECKED BY	TALITHA STIMSON
FUNCTIONAL SUPERVISOR	L.R.ASHLEY

STATE OF CALIFORNIA - DEPARTMENT OF TRANSPORTATION
Caltrans®
DESIGN

\\SV01S01\PSESUBMIT\01_472301\147230na005.dgn

LAST REVISION 03-18-09 | DATE PLOTTED => 25-SEP-2009 | TIME PLOTTED => 06:28

BORDER LAST REVISED 4/11/2008 | RELATIVE BORDER SCALE IS IN INCHES 0 1 2 3 | USERNAME => trmikesl | DGN FILE => 147230na005.dgn | CU 03232 | EA 472301

Dist	COUNTY	ROUTE	POST MILES TOTAL PROJECT	SHEET No.	TOTAL SHEETS
01	Hum	96	26.9/R41.1	40	53

REGISTERED CIVIL ENGINEER 03/18/09 DATE

9-21-09
PLANS APPROVAL DATE

REGISTERED PROFESSIONAL ENGINEER TALITHA STIMSON No. C 59258 Exp. 6-30-11 CIVIL STATE OF CALIFORNIA

THE STATE OF CALIFORNIA OR ITS OFFICERS OR AGENTS SHALL NOT BE RESPONSIBLE FOR THE ACCURACY OR COMPLETENESS OF SCANNED COPIES OF THIS PLAN SHEET.

TRAFFIC STRIPE AND PAVEMENT MARKER QUANTITIES

LOCATION	STATION FROM	STATION TO	DETAIL NUMBER	THERMOPLASTIC TRAFFIC STRIPE: DETAIL LENGTH	4" WHITE (SOLID)	4" YELLOW (SOLID)	4" YELLOW (BROKEN 36-12)	PAVEMENT MARKER (RETROREFLECTIVE-RECESSED): TYPE D YELLOW (TWO-WAY)	TYPE H YELLOW (ONE-WAY)
				LF				EA	
1	"A1" 11+80	"A1" 28+20	27B	1640	3280				
1	"A1" 11+80	"A1" 28+20	22	1640		3280		140	
2	"A2" 10+80	"A2" 13+00	27B	220	440				
2	"A2" 10+80	"A2" 13+00	22	220		440		22	
2	"A2" 20+40	"A2" 23+20	27B	280	560				
2	"A2" 20+40	"A2" 23+20	22	280		560		27	
3	"A3" 14+40	"A3" 20+70	27B	630	1260				
3	"A3" 14+40	"A3" 20+70	19 R	630		630	630	28	15
4	"A4" 09+80	"A4" 12+00	27B	220	440				
4	"A4" 09+80	"A4" 12+00	22	220		440		22	
5	"A5" 11+80	"A5" 17+20	27B	540	1080				
5	"A5" 11+80	"A5" 17+20	22	540		1080		50	
			SUB TOTAL		7060	6430		289	15
			TOTAL		13,490		630	304	

NOTE: WHEN DETAIL 19 IS SHOWN, THE SOLID BARRIER SHALL BE PLACED ON THE SIDE DESIGNATED (R=RIGHT, L=LEFT) AS PM'S INCREASE.

PAVEMENT DELINEATION QUANTITIES
PDQ-1

REVISED BY | DATE REVISED
BIJAN SAMRAD | TALITHA STIMSON
CALCULATED-DESIGNED BY | CHECKED BY
FUNCTIONAL SUPERVISOR: L.R.ASHLEY

STATE OF CALIFORNIA - DEPARTMENT OF TRANSPORTATION
Caltrans
DESIGN

\\SV01S01\PSESUBMIT\01_472301\147230nc001.dgn

LAST REVISION 03-18-09 | DATE PLOTTED => 25-SEP-2009 | TIME PLOTTED => 06:28

Dist	COUNTY	ROUTE	POST MILES TOTAL PROJECT	SHEET No.	TOTAL SHEETS
01	Hum	96	26.9/R41.1	41	53

REGISTERED CIVIL ENGINEER 03/18/09 DATE

9-21-09
PLANS APPROVAL DATE

REGISTERED PROFESSIONAL ENGINEER TALITHA STIMSON No. C 59258 Exp. 6-30-11 CIVIL STATE OF CALIFORNIA

THE STATE OF CALIFORNIA OR ITS OFFICERS OR AGENTS SHALL NOT BE RESPONSIBLE FOR THE ACCURACY OR COMPLETENESS OF SCANNED COPIES OF THIS PLAN SHEET.

ROADWAY ITEMS

LOCATION	STATION FROM	STATION TO	ROADWAY EXCAVATION	IMPORTED BORROW	CLASS 2 AGGREGATE BASE	IMPORTED MATERIAL (SHOULDER BACKING)	HOT MIX ASPHALT (TYPE A)	PAVING ASPHALT (BINDER-GEOSYNTHETIC PAVEMENT INTERLAYER)	TACK COAT	GEOSYNTHETIC PAVEMENT INTERLAYER
			CY			TON				SQYD
1	"A1" 12+40	"A1" 22+00	1328.7	134.0	860.6		672.4		0.50	
	"A1" 22+00	"A1" 23+60	4.6	8.8		32.0	224.8		0.35	
	"A1" 23+60	"A1" 27+60	544.6	25.5	368.3		283.6		0.21	
2	"A2" 11+40	"A2" 12+40	83.4		68.2	25.0	161.9	0.06	0.07	44.4
	"A2" 21+00	"A2" 22+60	272.8	6.4	206.0		162.5		0.11	
3	"A3" 15+00	"A3" 20+10	15.1	10.1		28.0	934.9		1.42	
4	"A4" 10+40	"A4" 11+40	77.7		65.3	15.0	100.7	0.06	0.03	44.4
5	"A5" 12+40	"A5" 16+60	640.9	28.9	476.2		304.2		0.22	
		TOTAL	2967.8	213.7	2044.6	100.0	2845.0	0.12	2.91	88.8

COLD PLANE AC PAVEMENT

LOCATION	LOCATION (STATION) FROM	LOCATION (STATION) TO	AREA
			SQYD
1	"A1" 11+80	"A1" 12+40	173.3
	"A1" 22+00	"A1" 23+60	497.7
	"A1" 27+60	"A1" 28+20	186.6
2	"A2" 10+80	"A2" 11+40	240.0
	"A2" 11+40	"A2" 12+40	22.2
	"A2" 12+40	"A2" 13+00	226.6
	"A2" 20+40	"A2" 21+00	226.6
	"A2" 22+60	"A2" 23+20	236.6
3	"A3" 14+40	"A3" 15+00	290.0
	"A3" 15+00	"A3" 20+10	1983.1
	"A3" 20+10	"A3" 20+70	233.3
4	"A4" 09+80	"A4" 10+40	186.6
	"A4" 10+40	"A4" 11+40	22.2
	"A4" 11+40	"A4" 12+00	186.6
5	"A5" 11+80	"A5" 12+40	180.0
	"A5" 16+60	"A5" 17+20	180.0
		TOTAL	5071.4

ESA FENCE

LOCATION	STATION FROM	STATION TO	R†/L†	TEMPORARY FENCE (TYPE ESA)
				LF
1	"A1" 17+30	"A1" 17+40	R†	74
2	"A2" 22+27	"A2" 22+63	R†	84
3	"A3" 15+75	"A3" 19+45		362
			TOTAL	520

TEMPORARY WATER POLLUTION CONTROL

LOCATION	STATION FROM	STATION TO	TEMPORARY FIBER ROLLS	TEMPORARY CHECK DAM	TEMPORARY SILT FENCE	TEMPORARY DRAINAGE INLET PROTECTION
			LF			EA
1	"A1" 12+40	"A1" 27+60	50	32	20	4
2	"A2" 11+40	"A2" 12+40	150			
	"A2" 21+00	"A2" 22+60	50	16	10	1
3	"A3" 15+00	"A3" 20+10	50	16	30	
4	"A4" 10+40	"A4" 11+40		8		
5	"A5" 12+40	"A5" 16+60	50	20	10	1
		TOTAL	350	92	70	6

EROSION CONTROL

LOCATION	LOCATION (STATION) FROM	LOCATION (STATION) TO	R†/L†	EROSION CONTROL (TYPE D)	(N) PURE LIVE SEED	(N) FIBER	(N) STABILIZING EMULSION
				SQYD	LB	LB	LB
1	"A1" 12+40	"A1" 27+60	L†	816	32.0	370.8	25.3
	"A1" 12+40	"A1" 27+60	R†	1170	45.9	531.6	36.2
2	"A2" 11+43	"A2" 12+40	L†	30	1.2	13.6	0.9
	"A2" 21+60	"A2" 22+60	L†	153	6.0	69.5	4.7
	"A2" 21+60	"A2" 22+60	R†	333	13.1	151.3	10.3
3	"A3" 15+00	"A3" 20+10	L†	456	17.9	207.2	14.1
	"A3" 15+00	"A3" 20+10	R†	488	19.1	221.7	15.1
4	"A4" 10+40	"A4" 11+40	L†	86	3.4	39.1	2.7
	"A4" 10+40	"A4" 11+40	R†	51	2.0	23.2	1.6
5	"A5" 12+40	"A5" 16+60	L†	641	25.2	291.2	19.9
	"A5" 12+40	"A5" 16+60	R†	654	25.7	297.1	20.3
			TOTAL	4878			

(N) - NOT A SEPARATE PAY ITEM, FOR INFORMATION ONLY.

METAL BEAM GUARD RAIL

LOCATION	STATION FROM	STATION TO	RECONSTRUCT METAL BEAM GUARD RAILING	REMOVE METAL BEAM GUARD RAILING	METAL BEAM GUARD RAILING	ALTERNATIVE FLARED TERMINAL SYSTEM	COMMENTS
			LF			EA	
1	"A1" 25+08.27	"A1" 25+45.77		37.5		1	19.85'R†, 15.38'R†
	"A1" 25+45.77	"A1" 27+60.00	214.2				15.38'R†, 15.57'R†
2	"A2" 11+48.64	"A2" 12+94.87		146.2	146.2		18.58'R†, 17.95'R†
		TOTAL	214.2	183.7	146.2	1	

SUMMARY OF QUANTITIES
Q-1

REVISED BY | DATE REVISED
BIJAN SAMRAD | TALITHA STIMSON
CALCULATED-DESIGNED BY | CHECKED BY
FUNCTIONAL SUPERVISOR: L.R.ASHLEY

STATE OF CALIFORNIA - DEPARTMENT OF TRANSPORTATION
Caltrans
DESIGN

\\SV01S01\PSESUBMIT\01_472301(REPLACE)\147230pq001.dgn

LAST REVISION 05-04-09 | DATE PLOTTED => 25-SEP-2009 | TIME PLOTTED => 06:28

DIST	COUNTY	ROUTE	POST MILES TOTAL PROJECT	SHEET NO.	TOTAL SHEETS
01	Hum	96	26.9/R41.1	42	53

REGISTERED CIVIL ENGINEER

June 15, 2007
PLANS APPROVAL DATE

REGISTERED PROFESSIONAL ENGINEER Glenn DeCou No. C34547 Exp. 9-30-07 CIVIL STATE OF CALIFORNIA

The State of California or its officers or agents shall not be responsible for the accuracy or completeness of electronic copies of this plan sheet.

To accompany plans dated 9-21-09

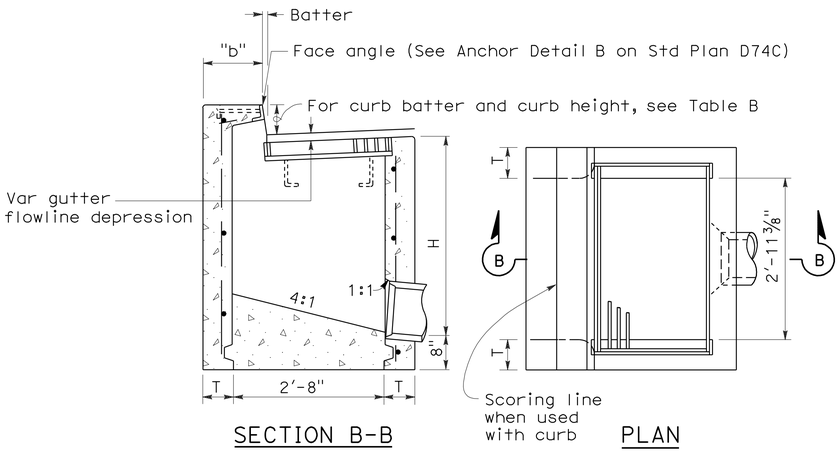

SECTION B-B PLAN

TYPE GO

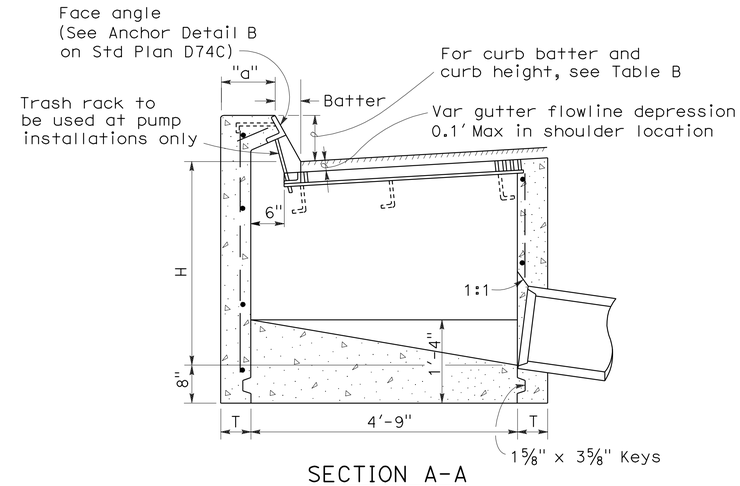

SECTION A-A

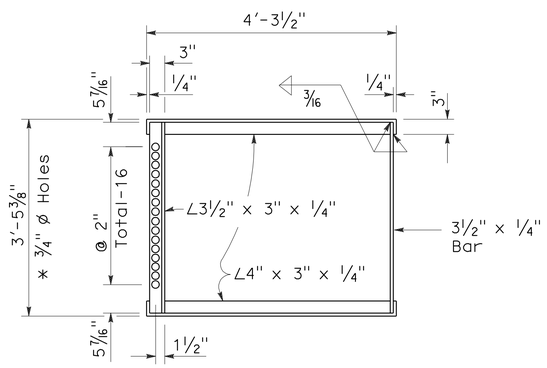

* 3/4" ø Holes required only with trash rack

GRATE FRAME FOR TYPE GDO INLET

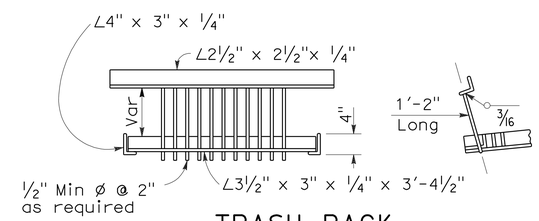

TRASH RACK

(For use with pump installation)

TABLE A

CONCRETE QUANTITIES				
	H=3'-0" TO 8'-0" (T=6")		H=8'-1" TO 20'-0" (T=8")	
TYPE	H=3'-0" (CY)	ADDITIONAL PCC PER FOOT (CY)	H=8'-1" (CY)	ADDITIONAL PCC PER FOOT (CY)
GO	1.24	0.245	3.39	0.346
GDO	1.62	0.322	4.36	0.446

Table based on 8" floor slab, no deduction for pipe openings, and curb type giving highest quantity of concrete. No deductions or adjustments are to be made to these quantities because of pipe openings, different floor alternatives or different curb type.

TABLE B

CURB TYPE	NORMAL CURB HEIGHT	CURB BATTER	"a" DIMENSION	"b" DIMENSION
A1-6	6"	1 1/2"	T+7 1/2"	T+6 1/2"
A1-8	8"	2"	T+7"	T+6"
B1-6	6"	4"	T+5"	T+4"
Type A Dike	6"	3"	T+6"	T+5"

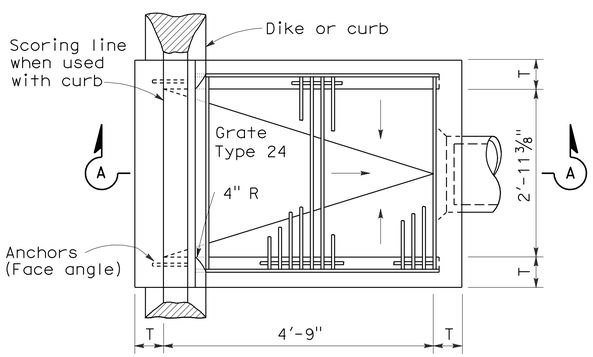

PLAN

TYPE GDO

NOTES:

1. "H" is the difference in elevation between the outlet pipe flow line and the normal gutter grade line undepressed.
2. For "T" wall thickness, see Table A below.
3. Wall reinforcing not required when "H" is 8'-0" or less and the unsupported width or length is 7'-0" or less. Walls exceeding these limits shall be reinforced with #4 @ 18"± centers placed 1 1/2" clear to inside of box unless otherwise shown.
4. Inlet bottom reinforcing not required. See Standard Plan D74C for alternative reinforced bottom.
5. Steps - None required where "H" is less than 2'-6" Where "H" is 2'-6" or more, install steps with lowest rung 1'-0" above the floor and highest rung not more than 6" below top of inlet. The distance between steps shall not exceed 1'-0" and shall be uniform throughout the length of the wall. Place steps in the wall without an opening. Step inserts may be substituted for the bar steps. Step Inserts shall comply with State Industrial Safety requirements. See Standard Plan D74C for step details.
6. When shown on the project plans, place a 3/4" plain round protection bar horizontally across the length of the opening and bend back 4" into the inlet wall on each side.
7. Pipe(s) can be placed in any wall.
8. Curb section shall match adjacent curb.
9. Basin floors shall have wood trowel finish and shall slope toward the outlet pipe as shown.
10. Galvanizing - See Standard Specifications or Special Provisions.
11. See Standard Plan D77A and D77B for grate and frame details and weights of miscellaneous iron and Steel.
12. See Standard Plan D78A for gutter depression details.
13. Full penetration butt welds may be substituted for the fillet welds on all anchors.
14. Standard square, hexagon, round or equivalent headed anchors may be substituted for the right angle hooks on the anchors shown on this plan.
15. Cast-in-place or precast alternative is optional with contractor. See Standard Specifications.
16. Cast-in-place inlets to be formed around all pipes/stubs intersecing the inlet and concrete poured in one continuous operation. Precast inlets shall have mortared pipe connections conforming to details for Type GCP inlets on Standard Plan D75B. See Standard Specifications for mortar composition.

STATE OF CALIFORNIA
DEPARTMENT OF TRANSPORTATION

DRAINAGE INLETS

NO SCALE

RSP D74B DATED JUNE 15, 2007 SUPERSEDES STANDARD PLAN D74B DATED MAY 1, 2006 - PAGE 150 OF THE STANDARD PLANS BOOK DATED MAY 2006.

REVISED STANDARD PLAN RSP D74B

2006 REVISED STANDARD PLAN RSP D74B

4-16-07

DIST	COUNTY	ROUTE	POST MILES TOTAL PROJECT	SHEET NO.	TOTAL SHEETS
01	Hum	96	26.9/R41.1	43	53

Raymond Don Tsztoo
REGISTERED CIVIL ENGINEER

June 6, 2008
PLANS APPROVAL DATE

REGISTERED PROFESSIONAL ENGINEER Raymond Don Tsztoo No. C37332 Exp. 6-30-08 CIVIL STATE OF CALIFORNIA

The State of California or its officers or agents shall not be responsible for the accuracy or completeness of electronic copies of this plan sheet.

To accompany plans dated 9-21-09

2006 REVISED STANDARD PLAN RSP D97F

ANNULAR AND HELICAL PROFILE

COUPLING TYPE	PIPE CORRUGATION	PIPE SIZE	W OR A	PIPE WALL THICKNESS CSP	PIPE WALL THICKNESS CAP	BAND THICKNESS CSP	BAND THICKNESS CAP	BAR AND STRAP (CSP ONLY) STRAP THICKNESS	BOLTS Dia	BAR Dia	BAR YIELD STRENGTH	ANGLE DIMENSIONS CSP	ANGLE DIMENSIONS CAP	BOLTS (No. - Dia) CSP	BOLTS (No. - Dia) CAP	RIVETS ANGLE TO BAND CSP	RIVETS ANGLE TO BAND CAP	SPOT WELDS ANGLE TO BAND CSP
TWO PIECE INTEGRAL FLANGE	1½" × ¼"	6"-10"	7"	0.064"-0.079"	0.060"	0.064"	0.060"							2-⅜"	2-⅜"			
	2⅔" × ½"	12"-24"	12"		0.060"-0.105"		0.060"								3-½"			
UNIVERSAL	2⅔" × ½"	THROUGH 36"	12"	0.064"-0.138"	0.060"-0.135"	0.064"	0.060"	0.079"	½"	⅞"	32 ksi	2" × 2" × 3/16"	2" × 2" × 3/16"	3-½"	3-½"	3-⅜"	3-⅜"	5-½"
		42"-60"	16¼"	0.064"-0.168"	0.060"-0.164"	0.064"	0.060"	DOUBLE 0.079"	½"	⅞"	32 ksi	2" × 2" × ¼"	2" × 2" × ¼"	4-½"	4-½"	5-⅜"	5-⅜"	
ANNULAR	2⅔" × ½"	THROUGH 36"	12"	0.064"-0.138"	0.060"-0.135"	0.064"	0.060"					2" × 2" × 3/16"	2" × 2" × 3/16"	3-½"	3-½"	3-⅜"	3-⅜"	5-½"
		42"-60"	12"	0.064"-0.079"		0.064"						2" × 2" × 3/16"		3-½"		3-⅜"		5-½"
		42"-60"	12"	0.109"-0.168"	0.135"-0.164"	0.064"	0.075"					2" × 2" × ¼"	2" × 2" × ¼"	3-½"	3-½"	5-⅜"	5-⅜"	
		66"-72"	24"		0.164"		0.105"						2" × 2" × ¼"		5-½"		5-½"	
		66"-84"	24"	0.109"-0.168"		0.064"						2" × 2" × ¼"		5-½"		7-⅜"		
		42"-54"	12"		0.060"-0.105"		0.060"						2" × 2" × 3/16"		3-½"		3-⅜"	
	3" × 1"	48"-60"	14"	0.064"-0.079"		0.064"						2" × 2" × 3/16"		3-½"		3-⅜"		5-½"
		48"-60"	14"	0.109"		0.064"						2" × 2" × 3/16"		3-½"		5-⅜"		
		66"-120"	25"	0.064"-0.109"		0.064"						2" × 2" × 3/16"		5-½"		9-⅜"		
		42"-60"	14"		0.060"-0.105"		0.060"						2" × 2" × 3/16"		3-½"		5-⅜"	
		42"-60"	14"		0.135"		0.075"						2" × 2" × ¼"		3-½"		5-⅜"	
		66"-96"	25"		0.060"-0.135"		0.060"						2" × 2" × ¼"		5-½"		7-⅜"	
		96"-108"	25"		0.135"		0.075"						2" × 2" × ¼"		5-½"		7-⅜"	
HELICAL	2⅔" × ½"	THROUGH 36"	12"	0.064"-0.138"	0.060"-0.135"	0.064"	0.060"					2" × 2" × 3/16"	2" × 2" × 3/16"	3-½"	3-½"	3-⅜"	3-⅜"	5-½"
		42"-54"	12"		0.060"-0.105"		0.060"						2" × 2" × 3/16"		3-½"		3-⅜"	
		42"-60"	12"	0.064"-0.079"		0.064"						2" × 2" × 3/16"		3-½"		3-⅜"		5-½"
		42"-60"	12"	0.109"-0.168"	0.135"-0.164"	0.064"	0.075"					2" × 2" × ¼"	2" × 2" × ¼"	3-½"	3-½"	5-⅜"	5-⅜"	
		66'-84"	24"	0.109"-0.168"		0.064"						2" × 2" × ¼"		5-½"		7-⅜"		
		66"-72"	24"		0.164"		0.105"						2" × 2" × ¼"		5-½"		5-⅜"	
	3" × 1"	48"-60"	14"	0.064"-0.079"		0.064"						2" × 2" × 3/16"		3-½"		3-⅜"		5-½"
		48"-60"	14"	0.109"		0.064"						2" × 2" × 3/16"		3-½"		5-⅜"		
		66"-120"	25"	0.064"-0.109"		0.064"						2" × 2" × 3/16"		5-½"		9-⅜"		
		42"-60"	14"		0.060"-0.105"		0.060"						2" × 2" × 3/16"		3-½"		5-⅜"	
		42"-60"	14"		0.135"		0.075"						2" × 2" × ¼"		3-½"		5-⅜"	
		66"-96"	25"		0.060"-0.135"		0.060"						2" × 2" × ¼"		5-½"		7-⅜"	
		96"-108"	25"		0.135"		0.075"						2" × 2" × ¼"		5-½"		7-⅜"	
HUGGER	2⅔" × ½" REROLLED END	THROUGH 48"	10½"	0.109"		0.064"		0.079"	½"	⅞"	32 ksi							
		54"- 66"	10½"	0.109"		0.064"		DOUBLE 0.079"	½"	⅞"	32 ksi							
		THROUGH 54"	10½"	0.064"-0.079"		0.064"		0.079"	½"	⅞"	32 ksi							
		THROUGH 60"	10½"	0.138"		0.079"		DOUBLE 0.079"	½"	⅞"	32 ksi							
		66"-72"	10½"	0.138"		0.109"		DOUBLE 0.079"	½"	⅞"	32 ksi							
		THROUGH 72"	10½"	0.168"		0.109"		DOUBLE 0.109"	½"	⅞"	45 ksi							
	3" × 1" REROLLED END	48"-84"	10½"	0.109"		0.079"		DOUBLE 0.079"	½"	⅞"	32 ksi							
		48"-90"	10½"	0.064"-0.079"		0.064"		DOUBLE 0.079"	½"	⅞"	32 ksi							
		96"-102"	10½"	0.079"		0.079"		DOUBLE 0.079"	½"	⅞"	32 ksi							
		90"-120"	10½"	0.109"		0.109"		DOUBLE 0.109"	½"	⅞"	45 ksi							

SPIRAL RIB PROFILE

COUPLING TYPE	PIPE CORRUGATION	PIPE SIZE	W	PIPE WALL THICKNESS SSRP	PIPE WALL THICKNESS ASRP	BAND THICKNESS SSRP	BAND THICKNESS ASRP	BAR AND STRAP (SSRP ONLY) STRAP THICKNESS	BOLTS Dia	BAR Dia	BAR YIELD STRENGTH	ANGLE DIMENSIONS SSRP	ANGLE DIMENSIONS ASRP	BOLTS (No.- Dia) SSRP	BOLTS (No.- Dia) ASRP	RIVETS ANGLE TO BAND SSRP	RIVETS ANGLE TO BAND ASRP	SPOT WELDS ANGLE TO BAND SSRP
ANNULAR	2⅔" × ½" * REROLLED END	24"-36"	12"	0.064"-0.109"	0.060"-0.105"	0.064"	0.060"	0.079"	½"	⅞"	32 ksi	2" × 2" × 3/16"	2" × 2" × 3/16"	3-½"	3-½"	3-⅜"	3-⅜"	5-½"
		42"-60"	12"	0.064"-0.079"	0.075"-0.105"	0.064"	0.075"	0.079"	½"	⅞"	32 ksi	2" × 2" × 3/16"	2" × 2" × 3/16"	3-½"	3-½"	3-⅜"	3-⅜"	5-½"
		42"-60"	12"	0.109"		0.064"		0.079"	½"	⅞"	32 ksi	2" × 2" × ¼"		3-½"		5-⅜"		
		66"-84"	24"	0.109"		0.064"		0.079"	½"	⅞"	32 ksi	2" × 2" × ¼"		5-½"		7-⅜"		
HUGGER	2⅔" × ½" * REROLLED END	24"-54"	10½"	0.064"-0.079"		0.064"		0.079"	½"	⅞"	32 ksi							
		24"-48"	10½"	0.109"		0.064"		0.079"	½"	⅞"	32 ksi							
		54"-66"	10½"	0.109"		0.064"		Double 0.079"	½"	⅞"	32 ksi							

* See Note 13.

NOTES:

1. All ferrous metal coupling band connection hardware shall be galvanized or electro-plated in accordance with the Standard Specifications.
2. For helically corrugated coupling bands, the connection angles may be oriented parallel to the pipe axis, provided connecting holes are slotted lengthwise sufficiently to allow adjustment for the helix angle.
3. Tension strap may be connected to band with either spot welds or fillet welds that develop minimum required strength of strap.
4. Use 1¼" gage line dimension on attached angle leg for rivets and spot welds.
5. Band thickness shall not be less than:
   a. 3 standard thicknesses lighter than the thickness of the pipe for Corrugated Steel Pipe.
   b. 2 standard thicknesses lighter than the thickness of the pipe and in no case lighter than 0.060" for Corrugated Aluminum Pipe.
6. Dimensions, thicknesses and strengths shown are minimum.
7. For pipe arches use same width band as for round pipe of equal periphery.
8. Fillet welds of equivalent strength may be substituted for spot welds or rivets.
9. Spot welds shall develop minimum required strength of strap.
10. Pipe with rerolled ends having at least two 2⅔" × ½" annular corrugations at each end with or without an upturned flange may be connected with any of the annular coupling bands shown for pipe of the same diameter and wall thickness and having 2⅔" × ½" corrugations.
11. In the case of H-12 huggerbands, two piece bands are required for diameters through 96" and three piece bands are required for diameters 102" through 120".
12. Two piece bands are required for pipes greater than 42" diameter.
13. All profiles of Spiral Rib Pipe (¾" × ¾" ribs at 7½" pitch and ¾" × 1" ribs at 11½" pitch in both steel and aluminum and ¾" × 1" ribs at 8½" pitch in steel only) shall be manufactured with rerolled ends. Corrugation profile of the rerolled ends shall be 2⅔" × ½" annual corrugations with a minimum of two full corrugations at each end.

STATE OF CALIFORNIA
DEPARTMENT OF TRANSPORTATION

CORRUGATED METAL PIPE COUPLING DETAILS No. 6 POSITIVE JOINT

NO SCALE

RSP D97F DATED JUNE 6, 2008 SUPERSEDES STANDARD PLAN D97F
DATED MAY 1, 2006 - PAGE 188 OF THE STANDARD PLANS BOOK DATED MAY 2006.

REVISED STANDARD PLAN RSP D97F

4-2-08

DIST	COUNTY	ROUTE	POST MILES TOTAL PROJECT	SHEET NO.	TOTAL SHEETS
01	Hum	96	26.9/R41.1	44	53

Randell D. Hiatt
REGISTERED CIVIL ENGINEER

June 6, 2008
PLANS APPROVAL DATE

REGISTERED PROFESSIONAL ENGINEER
Randell D. Hiatt
No. C50200
Exp. 6-30-09
CIVIL
STATE OF CALIFORNIA

The State of California or its officers or agents shall not be responsible for the accuracy or completeness of electronic copies of this plan sheet.

To accompany plans dated 9-21-09

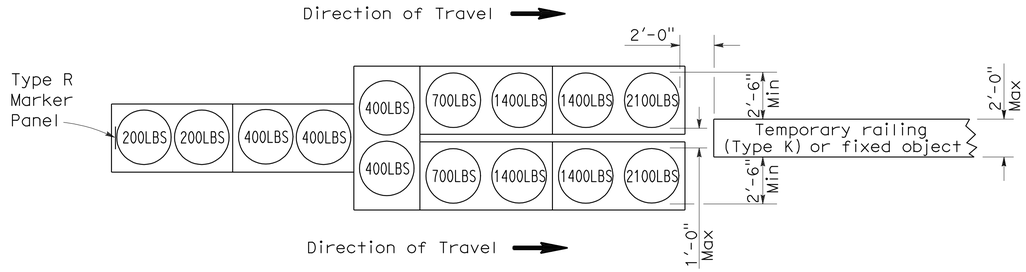

ARRAY 'TU14'

Approach speed 45 mph or more

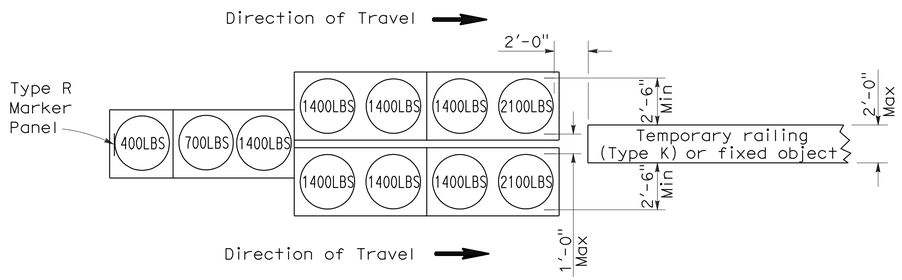

ARRAY 'TU11'

Approach speed less than 45 mph

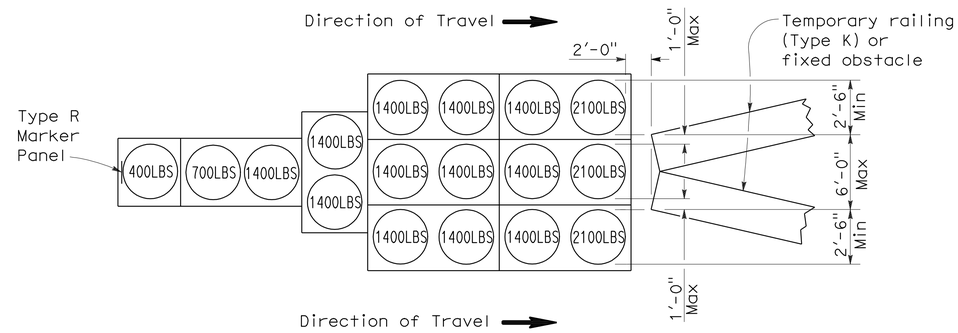

ARRAY 'TU17'

Approach speed less than 45 mph

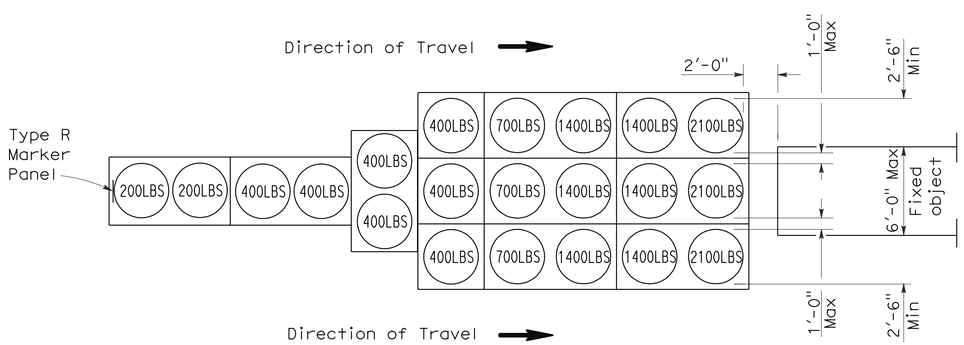

ARRAY 'TU21'

Approach speed 45 mph or more

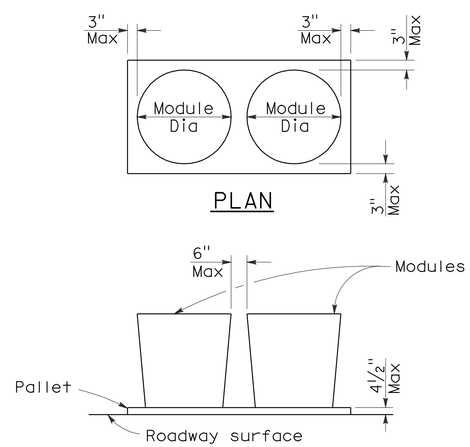

CRASH CUSHION PALLET DETAIL

See Note 7

NOTES:

1. (XXX) Indicates sand filled module location and weight of sand in pounds for each module. Module spacing is based on the greater diameter of the module.
2. All sand weights are nominal.
3. Temporary crash cushion arrays shall not encroach on the traveled way.
4. Place the top of Type R marker panel 1" below the module lid.
5. Refer to Standard Plan A73B for marker details.
6. Approach speeds indicated conform to NCHRP 350 Report criteria.
7. Use of pallets is optional.

STATE OF CALIFORNIA
DEPARTMENT OF TRANSPORTATION

TEMPORARY CRASH CUSHION, SAND FILLED (UNIDIRECTIONAL)

NO SCALE

RSP T1A DATED JUNE 6, 2008 SUPERSEDES STANDARD PLAN T1A
DATED MAY 1, 2006 - PAGE 211 OF THE STANDARD PLANS BOOK DATED MAY 2006.

REVISED STANDARD PLAN RSP T1A

2006 REVISED STANDARD PLAN RSP T1A

5-15-08

DIST	COUNTY	ROUTE	POST MILES TOTAL PROJECT	SHEET NO.	TOTAL SHEETS
01	Hum	96	26.9/R41.1	45	53

Randell D. Hiatt
REGISTERED CIVIL ENGINEER

June 6, 2008
PLANS APPROVAL DATE

REGISTERED PROFESSIONAL ENGINEER
Randell D. Hiatt
No. C50200
Exp. 6-30-09
CIVIL
STATE OF CALIFORNIA

The State of California or its officers or agents shall not be responsible for the accuracy or completeness of electronic copies of this plan sheet.

To accompany plans dated 9-21-09

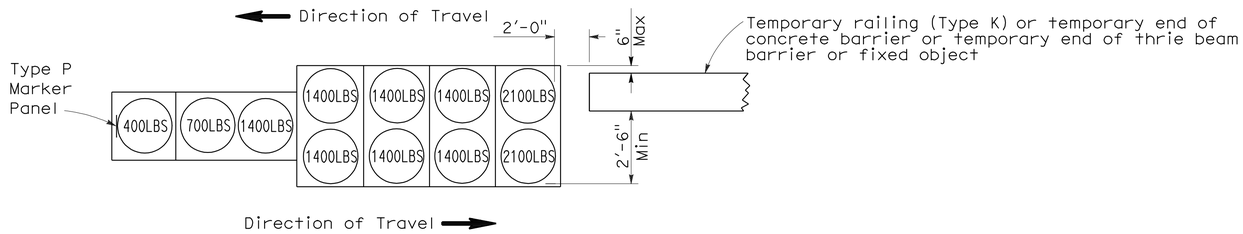

ARRAY 'TB11'

Approach speed less than 45 mph

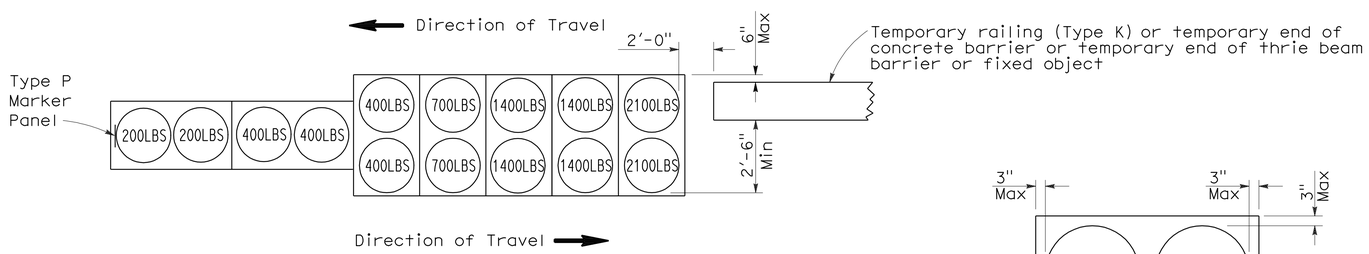

ARRAY 'TB14'

Approach speed 45 mph or more

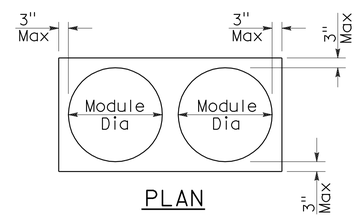

PLAN

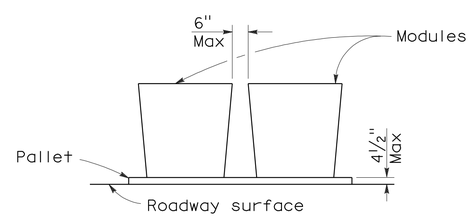

ELEVATION

CRASH CUSHION PALLET DETAIL

See Note 7

NOTES:

1. (XXX) Indicates sand filled module location and weight of sand in pounds for each module. Module spacing is based on the greater diameter of the module.
2. All sand weights are nominal.
3. Temporary crash cushion arrays shall not encroach on the traveled way.
4. Place the Type P marker panel so that the bottom of the panel rests upon the pallet.
5. Refer to Standard Plan A73B for marker details.
6. Approach speeds indicated conform to NCHRP 350 Report criteria.
7. Use of pallets is optional.

STATE OF CALIFORNIA
DEPARTMENT OF TRANSPORTATION

TEMPORARY CRASH CUSHION, SAND FILLED (BIDIRECTIONAL)

NO SCALE

RSP T1B DATED JUNE 6, 2008 SUPERSEDES STANDARD PLAN T1B
DATED MAY 1, 2006 - PAGE 212 OF THE STANDARD PLANS BOOK DATED MAY 2006.

REVISED STANDARD PLAN RSP T1B

2006 REVISED STANDARD PLAN RSP T1B

5-15-08

DIST	COUNTY	ROUTE	POST MILES TOTAL PROJECT	SHEET NO.	TOTAL SHEETS
01	Hum	96	26.9/R41.1	46	53

Randell D. Hiatt
REGISTERED CIVIL ENGINEER

June 6, 2008
PLANS APPROVAL DATE

REGISTERED PROFESSIONAL ENGINEER
Randell D. Hiatt
No. C50200
Exp. 6-30-09
CIVIL
STATE OF CALIFORNIA

The State of California or its officers or agents shall not be responsible for the accuracy or completeness of electronic copies of this plan sheet.

To accompany plans dated 9-21-09

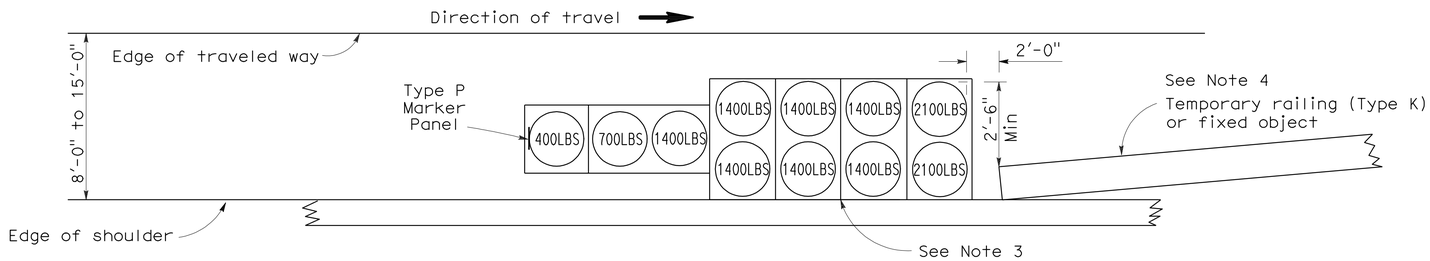

ARRAY 'TS11'

Approach speed less than 45 mph
See Note 9

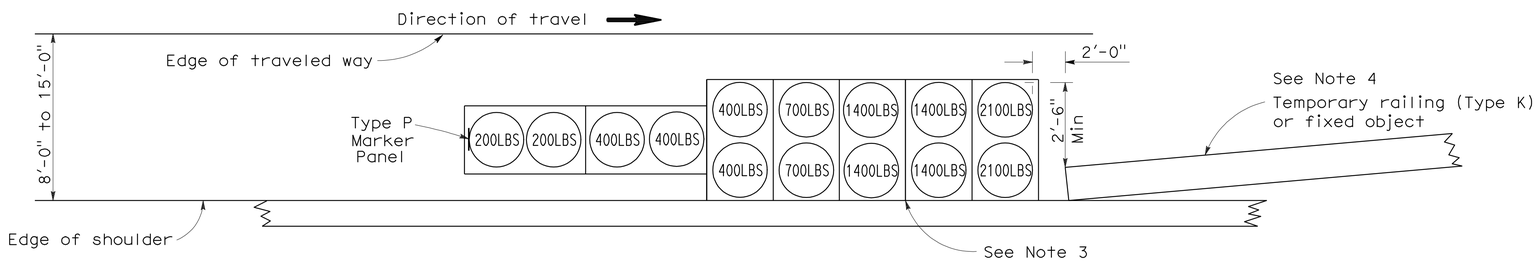

ARRAY 'TS14'

Approach speed 45 mph or more
See Note 9

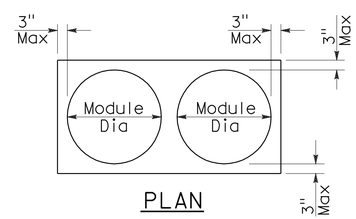

PLAN

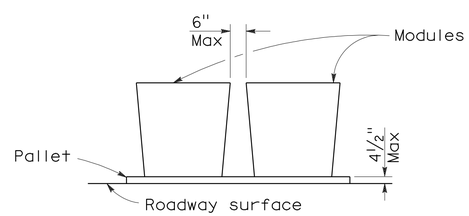

ELEVATION

CRASH CUSHION PALLET DETAIL

See Note 11

NOTES:

1. (XXX) Indicates sand filled module location and weight of sand in pounds for each module. Module spacing is based on the greater diameter of the module.
2. All sand weights are nominal.
3. The temporary crash cushion arrays shown on this plan shall be used only in locations where there will be traffic on one side of the temporary crash cushion array.
4. If the fixed object or approach end of the temporary railing is less than 15'-0" from the edge of traveled way, a temporary crash cushion is required in a construction or work zone.
5. Temporary crash cushion arrays shall not encroach on the traveled way.
6. Arrays for median shoulders shall conform to details shown on this plan for outside shoulders.
7. Place the Type P marker panel so that the bottom of the panel rests upon the pallet and faces traffic.
8. Refer to Standard Plan A73B for marker details.
9. For shoulder widths less than 8'-0", appropriate approved crash cushion protection, other than sand filled modules, shall be provided at fixed objects and at approach ends of temporary railing. The specific type of crash cushion shall be as shown on the project plans or as specified in the Special Provisions, or if not shown on the project plans or specified in the Special Provisions, shall be as approved by the Engineer.
10. Approach speeds indicated conform to NCHRP 350 Report criteria.
11. Use of pallets is optional.

STATE OF CALIFORNIA
DEPARTMENT OF TRANSPORTATION

TEMPORARY CRASH CUSHION, SAND FILLED (SHOULDER INSTALLATIONS)

NO SCALE

RSP T2 DATED JUNE 6, 2008 SUPERSEDES STANDARD PLAN T2
DATED MAY 1, 2006 - PAGE 213 OF THE STANDARD PLANS BOOK DATED MAY 2006.

REVISED STANDARD PLAN RSP T2

2006 REVISED STANDARD PLAN RSP T2

5-15-08

DIST	COUNTY	ROUTE	POST MILES TOTAL PROJECT	SHEET NO.	TOTAL SHEETS
01	Hum	96	26.9/R41.1	47	53

Greg W. Edwards
REGISTERED CIVIL ENGINEER

November 17, 2006
PLANS APPROVAL DATE

REGISTERED PROFESSIONAL ENGINEER
Greg W. Edwards
No. C36386
Exp. 6-30-08
CIVIL
STATE OF CALIFORNIA

The State of California or its officers or agents shall not be responsible for the accuracy or completeness of electronic copies of this plan sheet.

To accompany plans dated 9-21-09

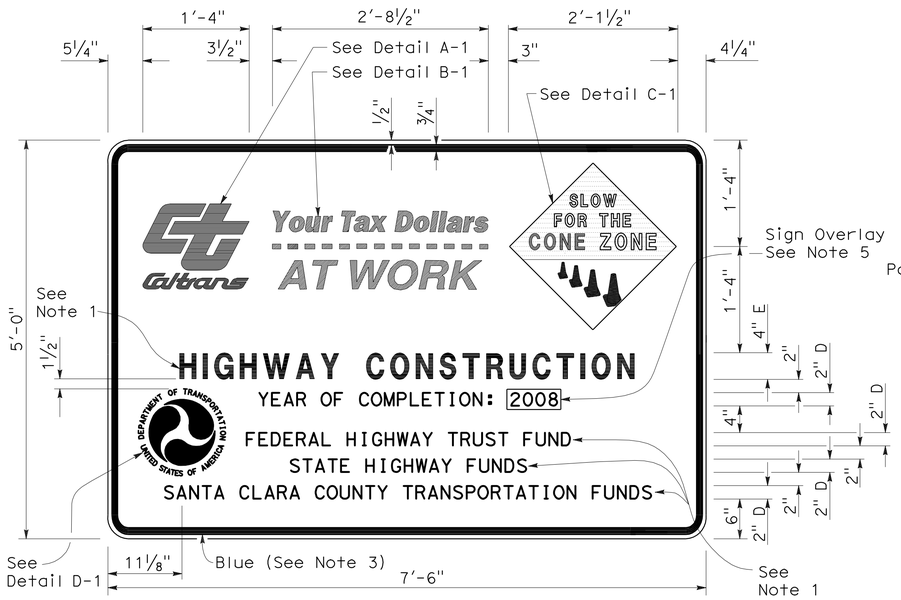

TYPE 1

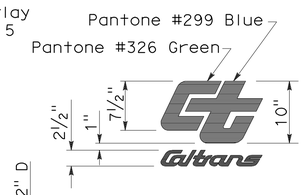

DETAIL A-1

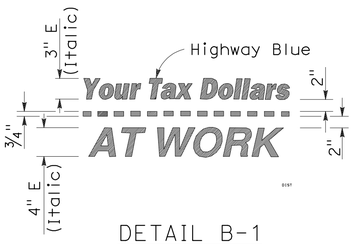

DETAIL B-1
(See Note 3)

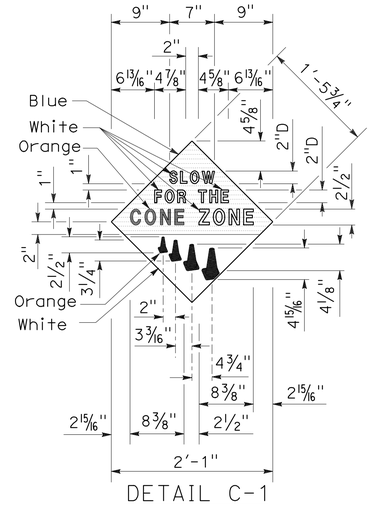

DETAIL C-1
(See Note 4)

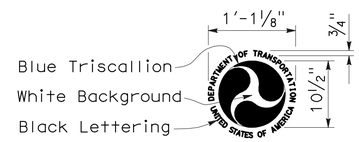

DETAIL D-1
(See Note 6)

NOTES:

1. The sign messages shown for type of project and fund types are examples only. See the Special Provisions for the applicable type of project and fund type messages to be used.
2. Except as otherwise shown, the legend of sign shall be black on a white background (non-reflective).
3. The border of the signs and details "B-1" and "B-2" shall be blue (non-reflective).
4. The diamond in details "C-1" and "C-2" shall be blue for the background of message, " SLOW FOR THE CONE ZONE", and white background for the orange cones. The color and type of font for the "SLOW FOR THE CONE ZONE" message shall be: "SLOW" white D; "FOR THE" white D; "CONE" orange Arial font; "ZONE" white Arial font.
5. Year of completion of project construction shown on the overlay is an example only. See the Special Provisions.
6. Use when the Project involves Federal Highway Trust Fund.

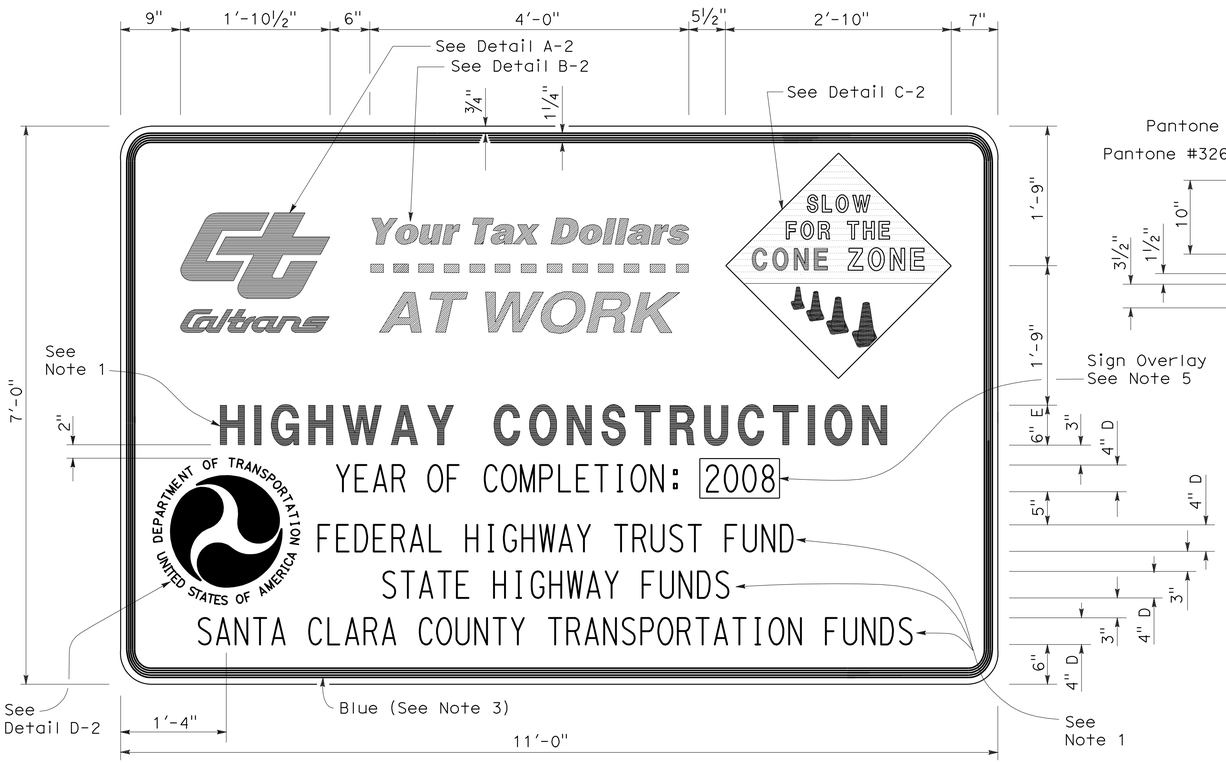

TYPE 2

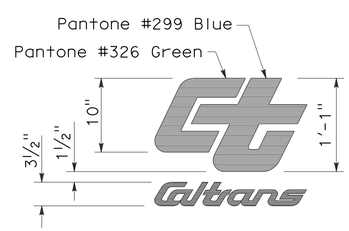

DETAIL A-2

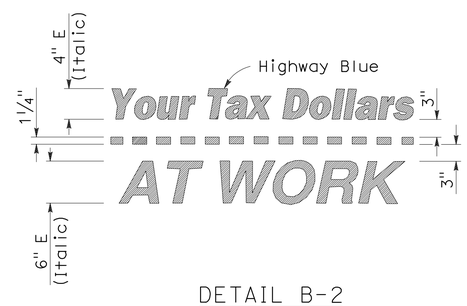

DETAIL B-2
(See Note 3)

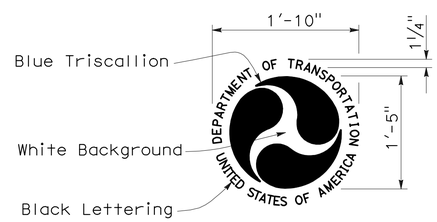

DETAIL D-2
(See Note 6)

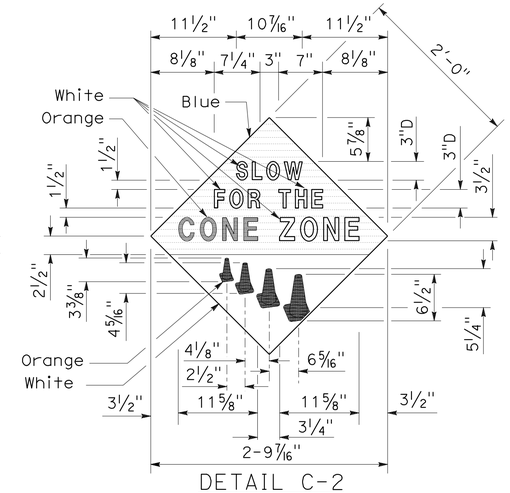

DETAIL C-2
(See Note 4)

STATE OF CALIFORNIA
DEPARTMENT OF TRANSPORTATION

CONSTRUCTION PROJECT FUNDING IDENTIFICATION SIGNS

NO SCALE

RSP T7 DATED NOVEMBER 17, 2006 SUPERSEDES STANDARD PLAN T7
DATED MAY 1, 2006 - PAGE 217 OF THE STANDARD PLANS BOOK DATED MAY 2006.

REVISED STANDARD PLAN RSP T7

2006 REVISED STANDARD PLAN RSP T7

9-7-06

DIST	COUNTY	ROUTE	POST MILES TOTAL PROJECT	SHEET NO.	TOTAL SHEETS
01	Hum	96	26.9/R41.1	48	53

Robert B Schott
LICENSED LANDSCAPE ARCHITECT

April 3, 2009
PLANS APPROVAL DATE

LICENSED LANDSCAPE ARCHITECT
Robert B. Schott 3695
Signature
11-30-10
Renewal Date
2-25-09
Date
STATE OF CALIFORNIA

The State of California or its officers or agents shall not be responsible for the accuracy or completeness of electronic copies of this plan sheet.

To accompany plans dated 9-21-09

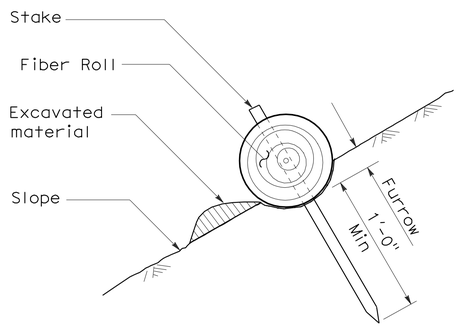

SECTION

TEMPORARY FIBER ROLL (TYPE 1)

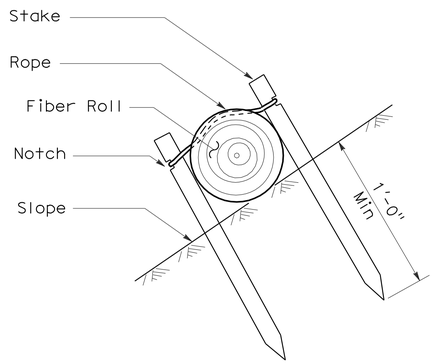

SECTION

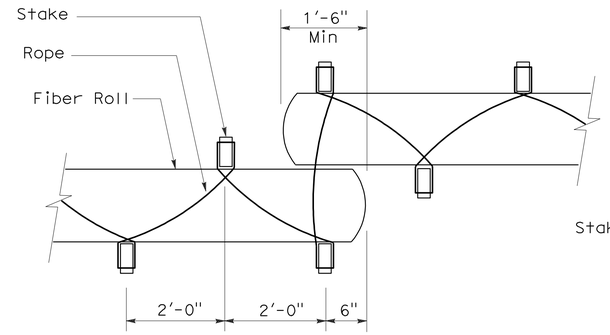

PLAN

TEMPORARY FIBER ROLL (TYPE 2)

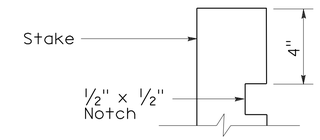

ELEVATION

STAKE NOTCH DETAIL

NOTES:

1. Temporary fiber roll spacing varies depending upon slope inclination.
2. Installations shown in the perspectives are for slope inclination of 10:1 and steeper.

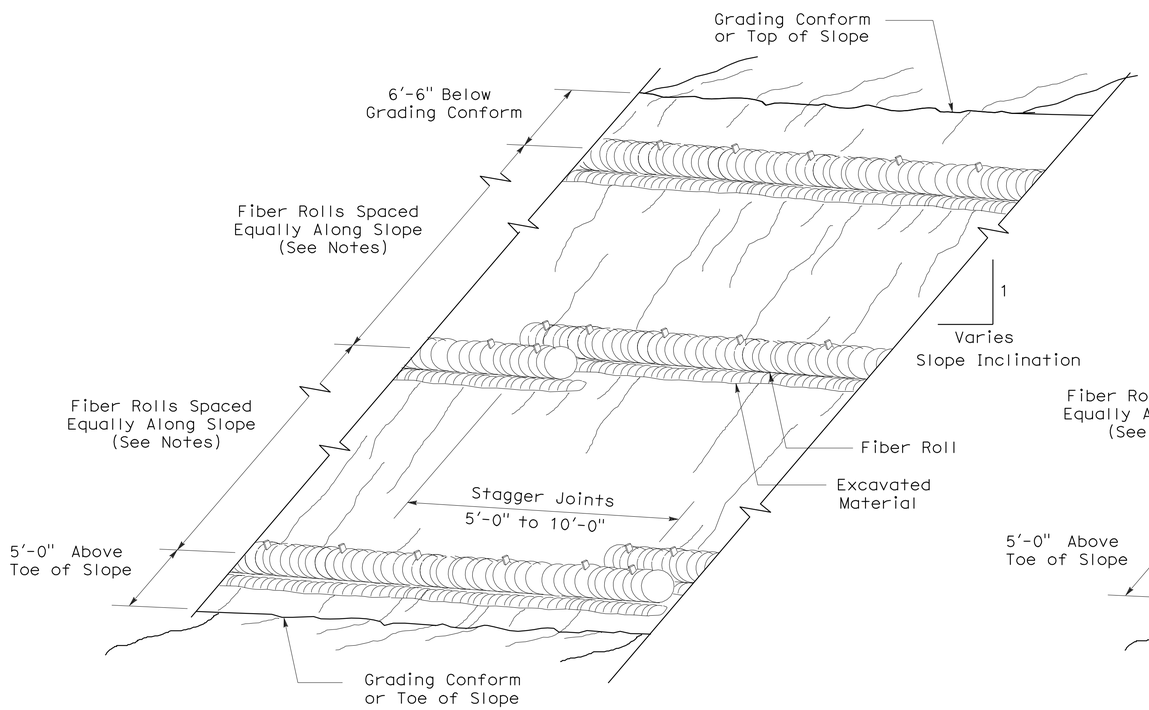

PERSPECTIVE

TEMPORARY FIBER ROLL (TYPE 1)

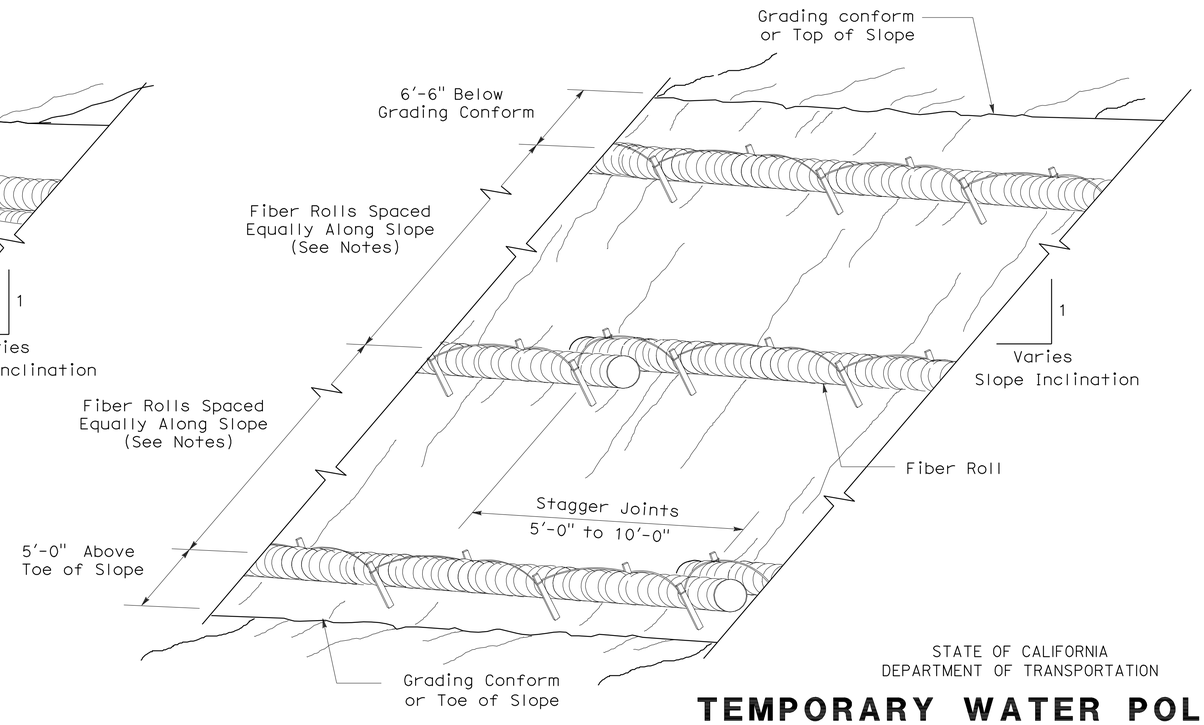

PERSPECTIVE

TEMPORARY FIBER ROLL (TYPE 2)

STATE OF CALIFORNIA
DEPARTMENT OF TRANSPORTATION

TEMPORARY WATER POLLUTION CONTROL DETAILS (TEMPORARY FIBER ROLL)

NO SCALE

RSP T56 DATED APRIL 3, 2009 SUPERSEDES STANDARD PLAN T56 DATED MAY 1, 2006 - PAGE 232 OF THE STANDARD PLANS BOOK DATED MAY 2006.

REVISED STANDARD PLAN RSP T56

2006 REVISED STANDARD PLAN RSP T56

2-23-09

DIST	COUNTY	ROUTE	POST MILES TOTAL PROJECT	SHEET NO.	TOTAL SHEETS
01	Hum	96	26.9/R41.1	49	53

Robert B Schott
LICENSED LANDSCAPE ARCHITECT

August 15, 2008
PLANS Approval DATE

LICENSED LANDSCAPE ARCHITECT
Robert B. Schott 3625
Robert B Schott
Signature
11-04-08
Renewal Date
08-11-08
Date
STATE OF CALIFORNIA

The State of California or its officers or agents shall not be responsible for the accuracy or completeness of electronic copies of this plan sheet.

To accompany plans dated 9-21-09

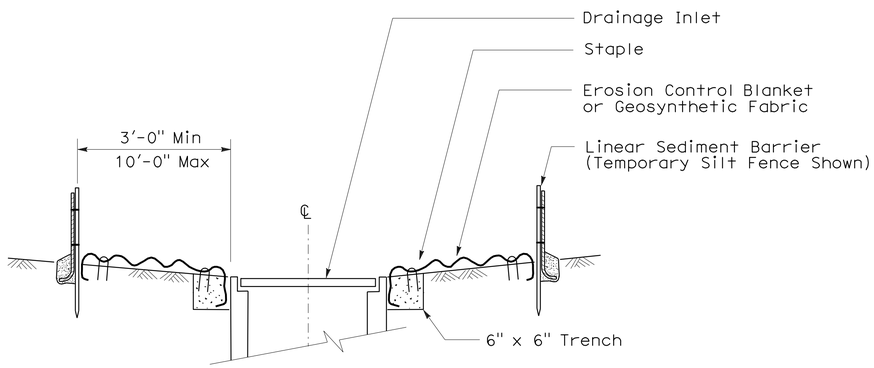

SECTION A-A

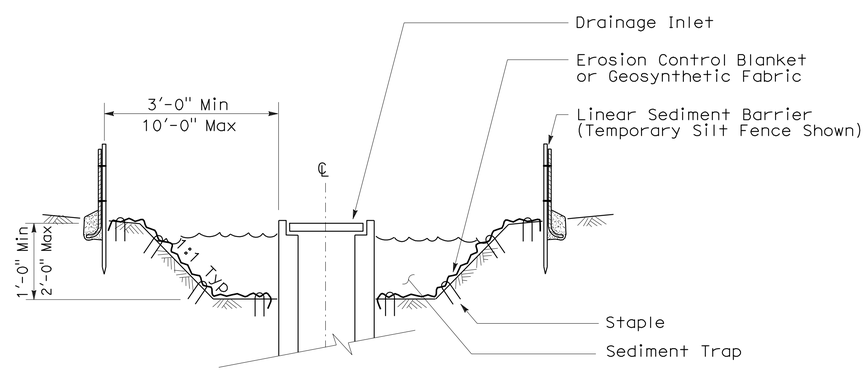

SECTION B-B

NOTES:

1. See Standard Plan T51 for Temporary Silt Fence.
2. Dimensions may vary to fit field conditions.

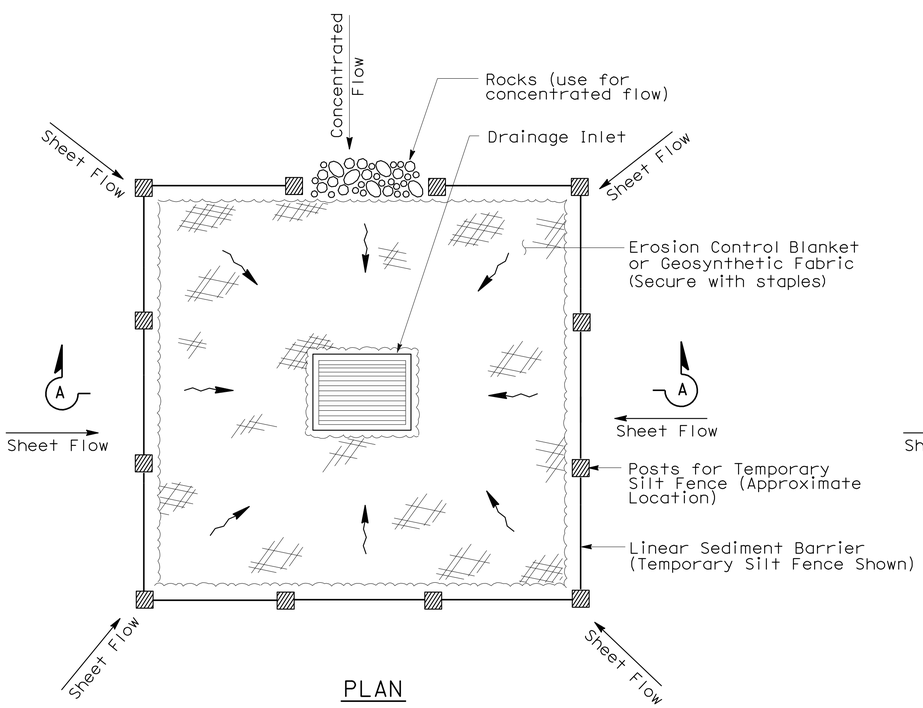

PLAN

TEMPORARY DRAINAGE
INLET PROTECTION (TYPE 1)

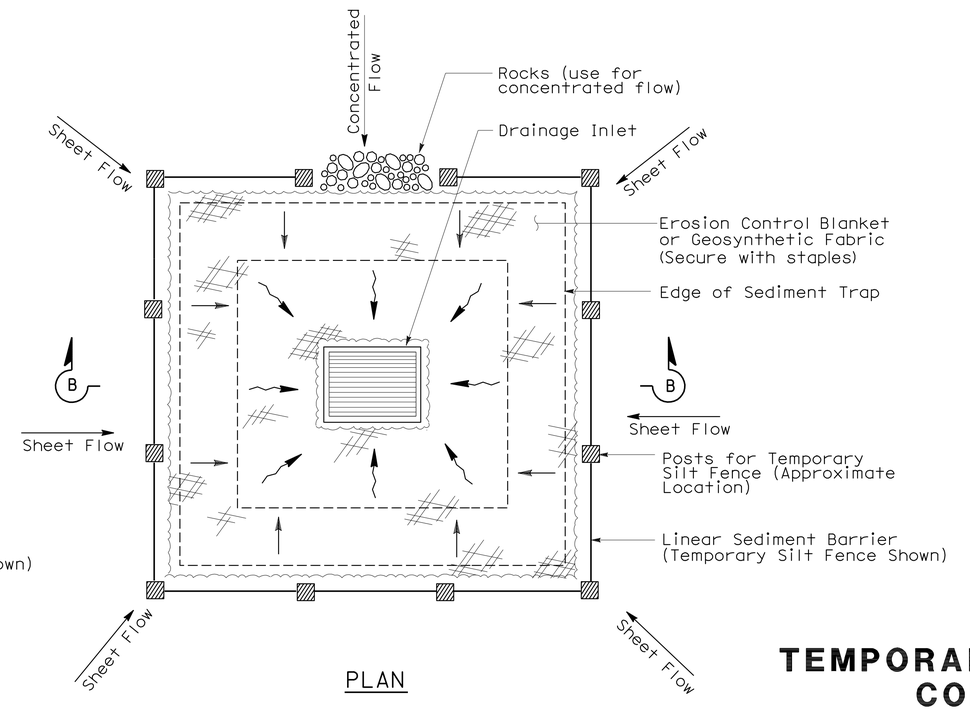

PLAN

TEMPORARY DRAINAGE
INLET PROTECTION (TYPE 2)
(EXCAVATED SEDIMENT TRAP)

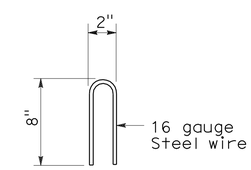

STAPLE DETAIL

STATE OF CALIFORNIA
DEPARTMENT OF TRANSPORTATION

TEMPORARY WATER POLLUTION CONTROL DETAILS (TEMPORARY DRAINAGE INLET PROTECTION)

NO SCALE

NSP T61 DATED AUGUST 15, 2008 SUPPLEMENTS
THE STANDARD PLANS BOOK DATED MAY 2006.

NEW STANDARD PLAN NSP T61

2006 NEW STANDARD PLAN NSP T61

7-11-08

DIST	COUNTY	ROUTE	POST MILES TOTAL PROJECT	SHEET NO.	TOTAL SHEETS
01	Hum	96	26.9/R41.1	50	53

Robert B Schott
LICENSED LANDSCAPE ARCHITECT

August 15, 2008
PLANS APPROVAL DATE

LICENSED LANDSCAPE ARCHITECT Robert B. Schott 3625 Signature 11-04-08 Renewal Date 08-11-08 Date STATE OF CALIFORNIA

The State of California or its officers or agents shall not be responsible for the accuracy or completeness of electronic copies of this plan sheet.

To accompany plans dated 9-21-09

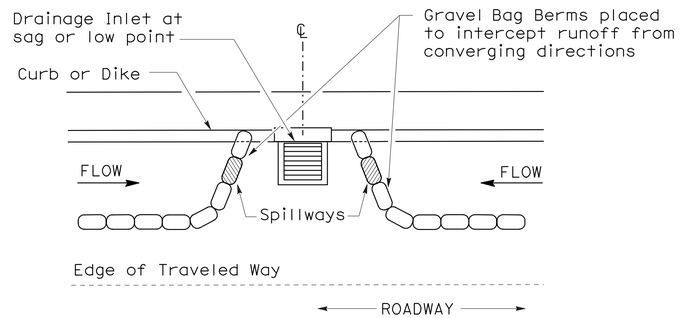

PLAN

CONFIGURATION FOR SAG POINT INLET (GRAVEL BAG BERM)

GRAVEL BAG BERM (TYPE 3A) SPACING TABLE

SLOPE OF ROADWAY (PERCENT)	1 to 3.9	4 to 5.9	6 to 7.9	8 to 10	10+
INTERVAL BETWEEN BERM	100′	75′	50′	25′	12′

For slope of less than 1%, install barriers only if erosion/sediment is prevalent

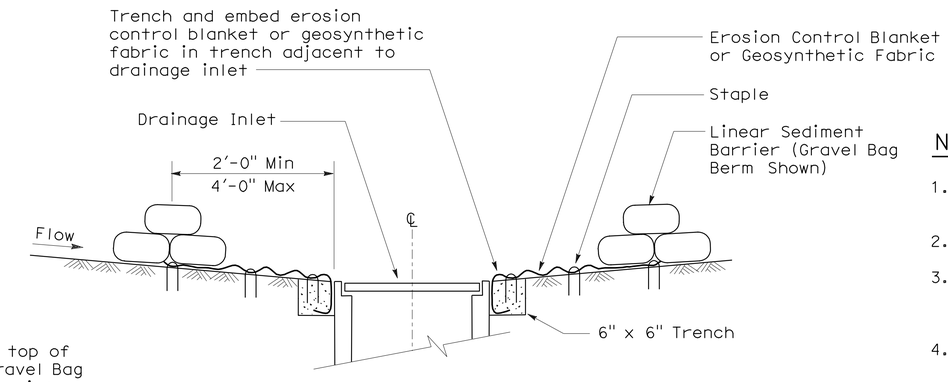

SECTION A-A

NOTES:

1. Place safety cones adjacent to drainage inlet protection.
2. Dimensions may vary to fit field conditions.
3. Install a minimum of 3 gravel bag berms upstream of each drainage inlet to be protected.
4. Position erosion control blanket or geosynthetic fabric at edge of concrete apron and secure in trench.
5. Erosion control blanket or geosynthetic fabric is not required if the area adjacent to the drainage inlet is vegetated or paved.

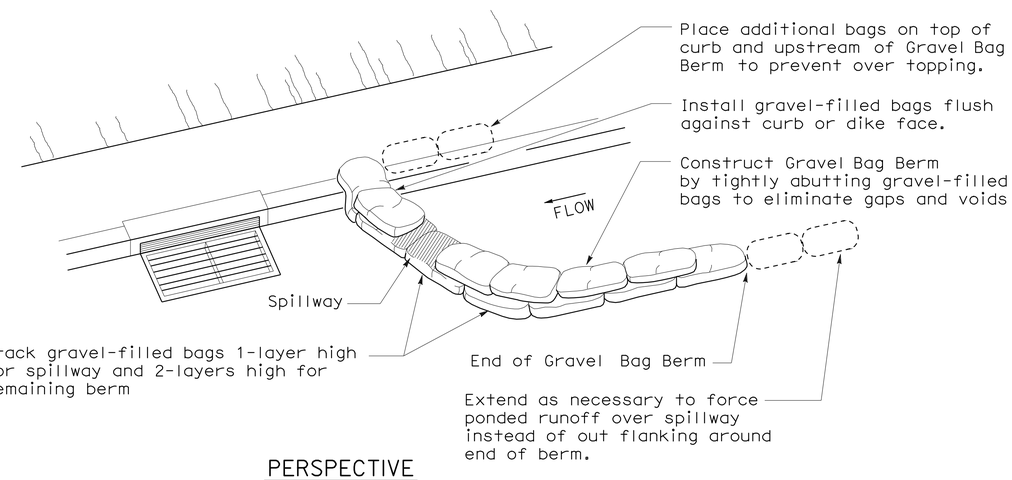

PERSPECTIVE

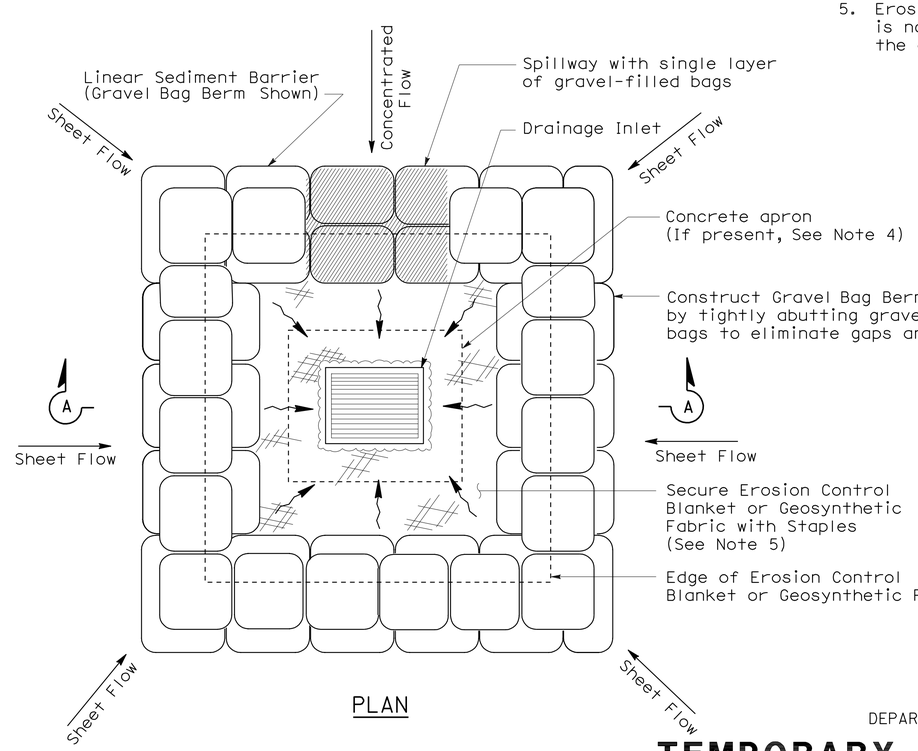

PLAN

TEMPORARY DRAINAGE INLET PROTECTION (TYPE 3B)

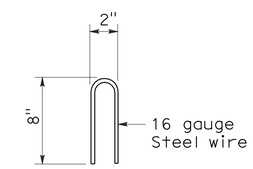

STAPLE DETAIL

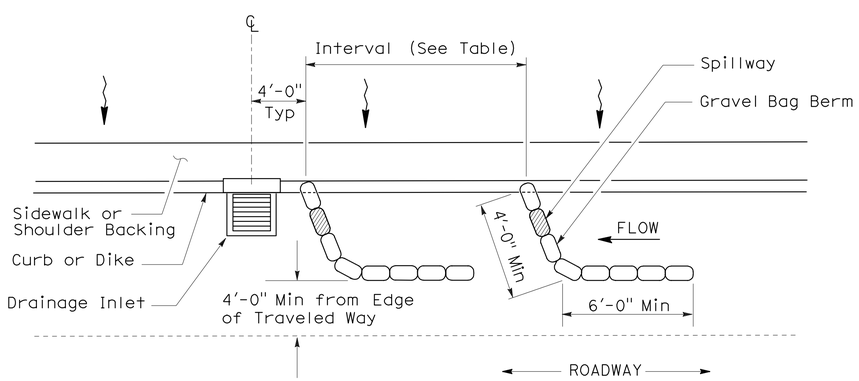

PLAN

TEMPORARY DRAINAGE INLET PROTECTION (TYPE 3A) (GRAVEL BAG BERM)

STATE OF CALIFORNIA
DEPARTMENT OF TRANSPORTATION

TEMPORARY WATER POLLUTION CONTROL DETAILS (TEMPORARY DRAINAGE INLET PROTECTION)

NO SCALE

NSP T62 DATED AUGUST 15, 2008 SUPPLEMENTS THE STANDARD PLANS BOOK DATED MAY 2006.

NEW STANDARD PLAN NSP T62

2006 NEW STANDARD PLAN NSP T62

7-11-08

DIST	COUNTY	ROUTE	POST MILES TOTAL PROJECT	SHEET NO.	TOTAL SHEETS
01	Hum	96	26.9/R41.1	51	53

Robert B Schott
LICENSED LANDSCAPE ARCHITECT

August 15, 2008
PLANS APPROVAL DATE

The State of California or its officers or agents shall not be responsible for the accuracy or completeness of electronic copies of this plan sheet.

LICENSED LANDSCAPE ARCHITECT — Robert B. Schott 3625 — Signature — 11-04-08 Renewal Date — 08-11-08 Date — STATE OF CALIFORNIA

To accompany plans dated 9-21-09

FLEXIBLE SEDIMENT BARRIER SPACING TABLE

SLOPE OF ROADWAY (PERCENT)	0 to 0.9	1 to 1.9	2 to 2.9	3 to 4	5+
INTERVAL BETWEEN BARRIERS	50′	35′	30′	25′	20′
ANGLE FROM FACE OF CURB	70°	70°	70°	45°	45°
SUGGESTED BARRIER LENGTH	6′	6′	6′	6′	6′

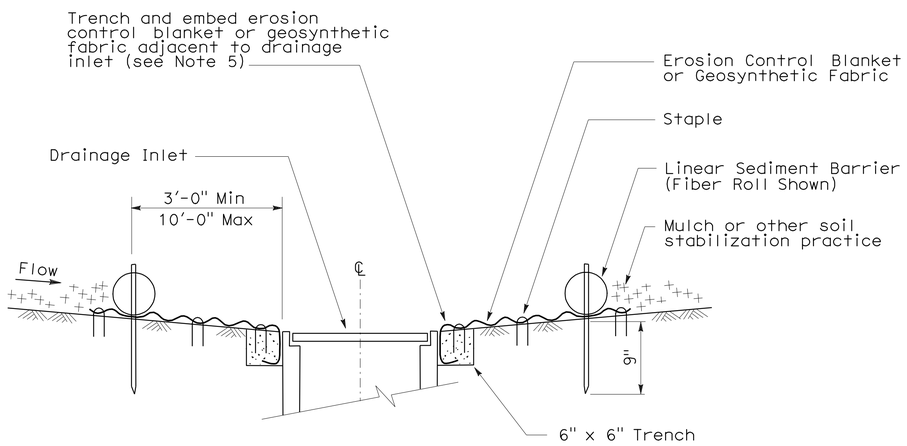

SECTION A-A

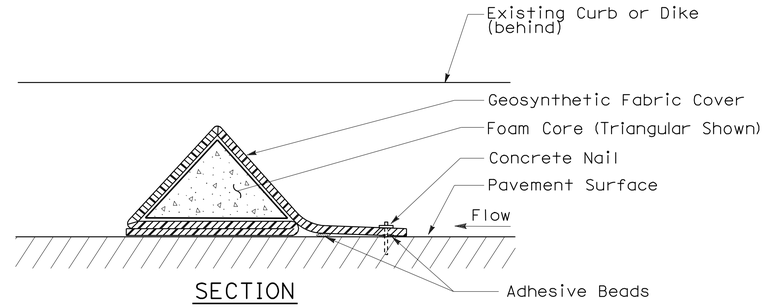

SECTION

FLEXIBLE SEDIMENT BARRIER DETAIL (FOAM BARRIER SHOWN)

NOTES:

1. See Standard Plan T51 for Temporary Silt Fence.
2. Dimensions may vary to fit field conditions.
3. Install a minimum of 3 flexible sediment barriers upstream of each drainage inlet to be protected.
4. Position erosion control blanket or geosynthetic fabric at edge of concrete apron and secure in trench.
5. Erosion control blanket or geosynthetic fabric is not required if the area adjacent to the drainage inlet is vegetated.

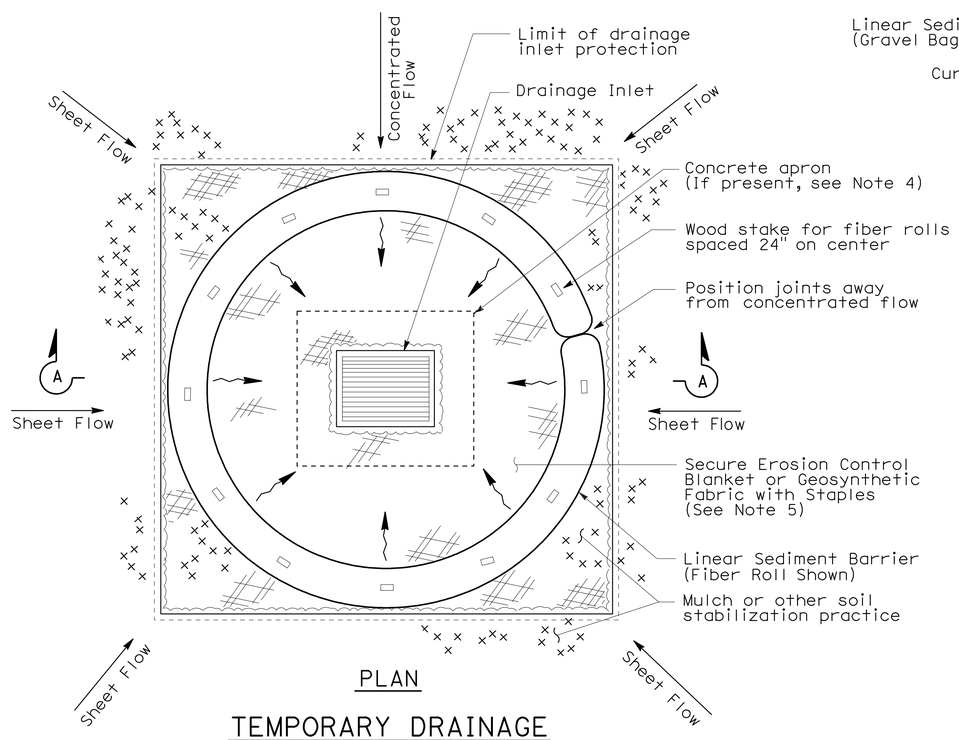

PLAN

TEMPORARY DRAINAGE INLET PROTECTION (TYPE 4A)

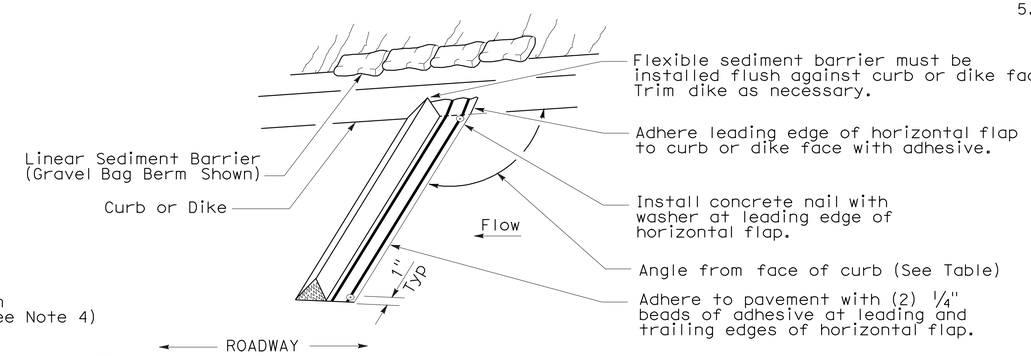

PERSPECTIVE

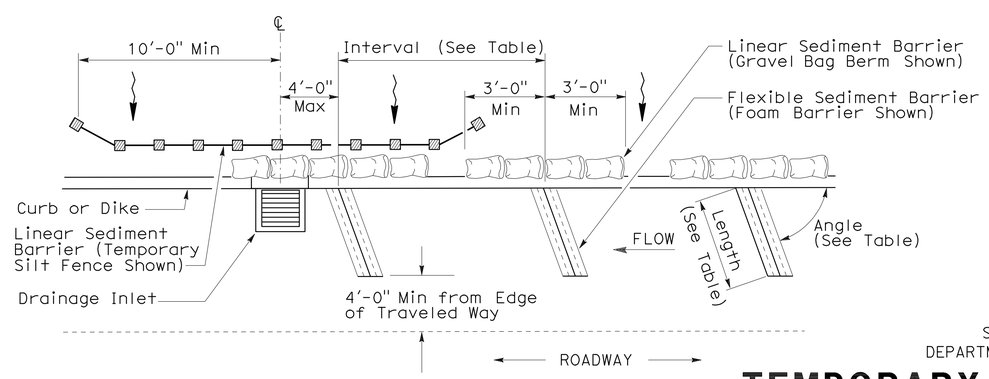

PLAN

TEMPORARY DRAINAGE INLET PROTECTION (TYPE 4B) FLEXIBLE SEDIMENT BARRIER

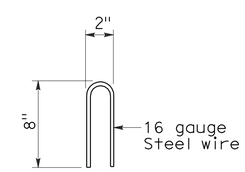

STAPLE DETAIL

STATE OF CALIFORNIA
DEPARTMENT OF TRANSPORTATION

TEMPORARY WATER POLLUTION CONTROL DETAILS (TEMPORARY DRAINAGE INLET PROTECTION)

NO SCALE

NSP T63 DATED AUGUST 15, 2008 SUPPLEMENTS THE STANDARD PLANS BOOK DATED MAY 2006.

NEW STANDARD PLAN NSP T63

2006 NEW STANDARD PLAN NSP T63

DIST	COUNTY	ROUTE	POST MILES TOTAL PROJECT	SHEET NO.	TOTAL SHEETS
01	Hum	96	26.9/R41.1	52	53

Robert B Schott
LICENSED LANDSCAPE ARCHITECT

August 15, 2008
PLANS APPROVAL DATE

LICENSED LANDSCAPE ARCHITECT
Robert B. Schott 3625
Robert B Schott
Signature
11-04-08
Renewal Date
08-11-08
Date
STATE OF CALIFORNIA

The State of California or its officers or agents shall not be responsible for the accuracy or completeness of electronic copies of this plan sheet.

To accompany plans dated 9-21-09

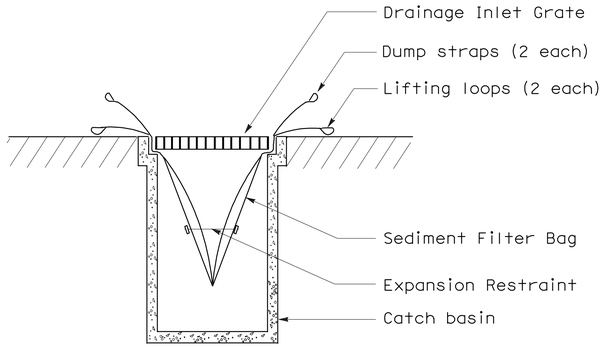

SECTION B-B

SEDIMENT FILTER BAG DETAIL

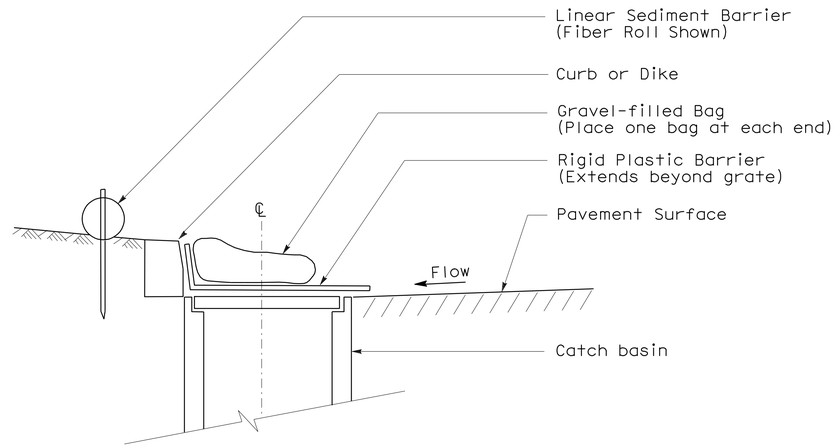

SECTION

TEMPORARY DRAINAGE INLET PROTECTION (TYPE 6A) (CATCH BASIN WITH GRATE)

NOTES:

1. See Standard Plan T51 for Temporary Silt Fence.
2. Dimensions may vary to fit field conditions.

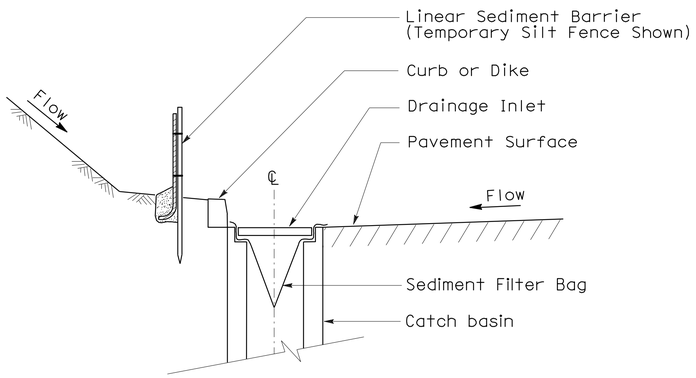

SECTION A-A

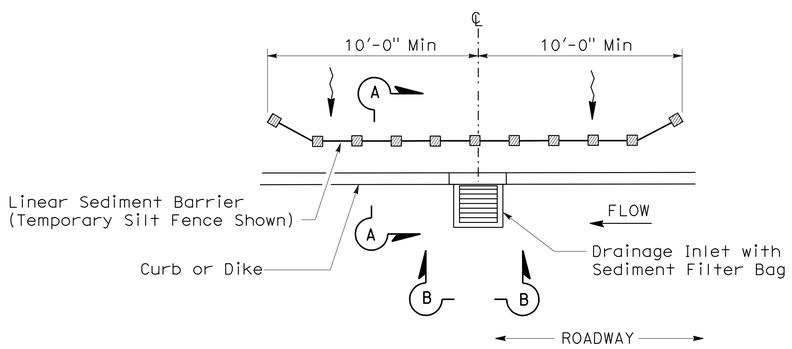

PLAN

TEMPORARY DRAINAGE INLET PROTECTION (TYPE 5) (SEDIMENT FILTER BAG)

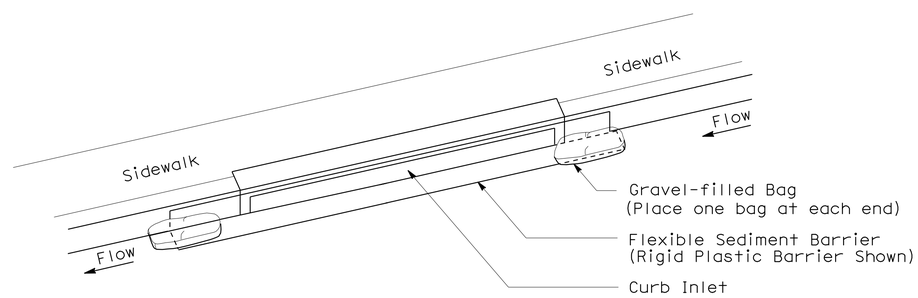

PERSPECTIVE

TEMPORARY DRAINAGE INLET PROTECTION (TYPE 6B) (CURB INLET WITHOUT GRATE)

STATE OF CALIFORNIA
DEPARTMENT OF TRANSPORTATION

TEMPORARY WATER POLLUTION CONTROL DETAILS (TEMPORARY DRAINAGE INLET PROTECTION)

NO SCALE

NSP T64 DATED AUGUST 15, 2008 SUPPLEMENTS
THE STANDARD PLANS BOOK DATED MAY 2006.

NEW STANDARD PLAN NSP T64

2006 NEW STANDARD PLAN NSP T64

7-11-08

DIST	COUNTY	ROUTE	POST MILES TOTAL PROJECT	SHEET NO.	TOTAL SHEETS
01	Hum	96	26.9/R41.1	53	53

LICENSED LANDSCAPE ARCHITECT

April 3, 2009
PLANS APPROVAL DATE

The State of California or its officers or agents shall not be responsible for the accuracy or completeness of electronic copies of this plan sheet.

LICENSED LANDSCAPE ARCHITECT — Robert B. Schott — 3625 — Signature — 11-30-10 Renewal Date — 2-25-09 Date — STATE OF CALIFORNIA

To accompany plans dated 9-21-09

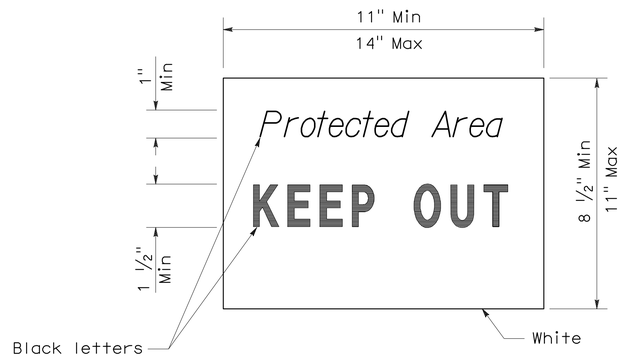

SIGN DETAIL

NOTE:

1. Temporary silt fence and temporary straw bale barrier shown for reference purposes only.

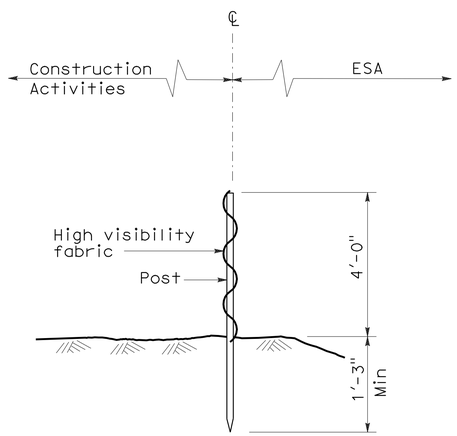

SECTION
TEMPORARY FENCE (TYPE ESA)

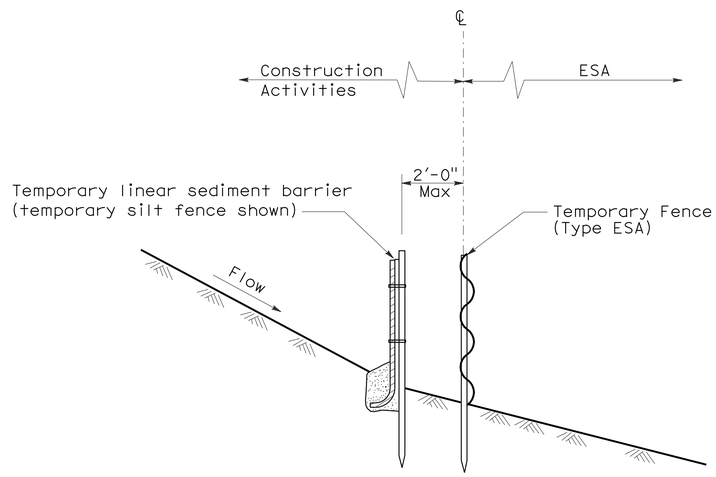

SECTION
PLACEMENT DETAIL
FOR TEMPORARY LINEAR SEDIMENT BARRIER
USED WITH TEMPORARY
FENCE (TYPE ESA)
(See Note 1)

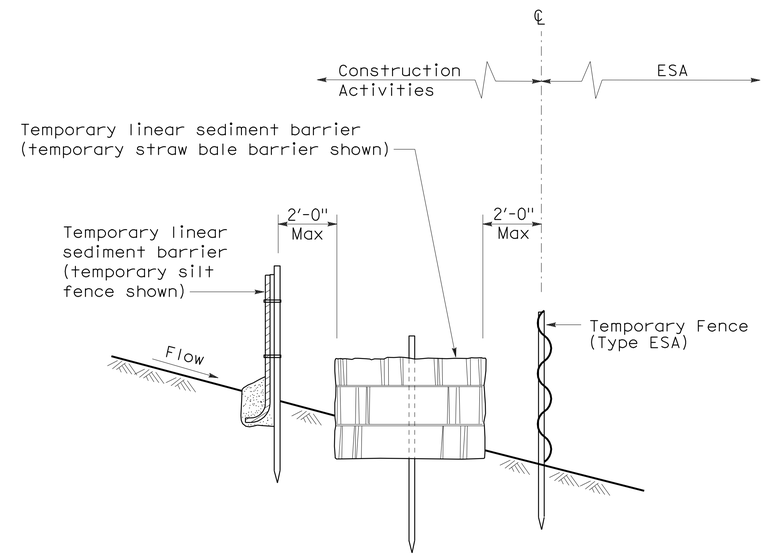

SECTION
PLACEMENT DETAIL
FOR TEMPORARY SILT FENCE
AND TEMPORARY STRAW BALE BARRIER
USED WITH TEMPORARY FENCE (TYPE ESA)
(See Note 1)

STATE OF CALIFORNIA
DEPARTMENT OF TRANSPORTATION

TEMPORARY WATER POLLUTION CONTROL DETAILS [TEMPORARY FENCE (TYPE ESA)]

NO SCALE

NSP T65 DATED APRIL 3, 2009 SUPPLEMENTS
THE STANDARD PLANS BOOK DATED MAY 2006.

NEW STANDARD PLAN NSP T65

2006 NEW STANDARD PLAN NSP T65