HSNH-Q101(162)E

| Dist | COUNTY | ROUTE | POST MILES TOTAL PROJECT | SHEET No. | TOTAL SHEETS |
|---|---|---|---|---|---|
| 01 | Hum | 101 | T0.2/R126.0 | 1 | 72 |

STATE OF CALIFORNIA
# DEPARTMENT OF TRANSPORTATION

## PROJECT PLANS FOR CONSTRUCTION ON
# STATE HIGHWAY
## IN HUMBOLDT COUNTY AT VARIOUS LOCATIONS FROM 0.2 MILE NORTH OF THE MENDOCINO COUNTY LINE TO 0.1 MILE SOUTH OF SOUTH PRAIRIE CREEK PARK UNDERCROSSING

TO BE SUPPLEMENTED BY STANDARD PLANS DATED MAY 2006

INDEX OF PLANS


| SHEET No. | DESCRIPTION |
|---|---|
| 1 | TITLE AND LOCATION MAP |
| 2 | LOCATIONS OF CONSTRUCTION |
| 3 | TYPICAL CROSS SECTIONS |
| 4-6 | CONSTRUCTION DETAILS |
| 7-9 | DRAINAGE DETAILS AND QUANTITIES |
| 10-13 | UTILITY PLANS |
| 14-16 | TRAFFIC HANDLING PLANS AND DETAILS |
| 17-37 | SUMMARY OF QUANTITIES |
| 38-62 | REVISED AND NEW STANDARD PLANS |

STRUCTURE PLANS

| | |
|---|---|
| 63-72 | TRANSITION ANCHOR BLOCK DETAILS |


THE STANDARD PLANS LIST APPLICABLE TO THIS CONTRACT IS INCLUDED IN THE NOTICE TO BIDDERS AND SPECIAL PROVISIONS BOOK.

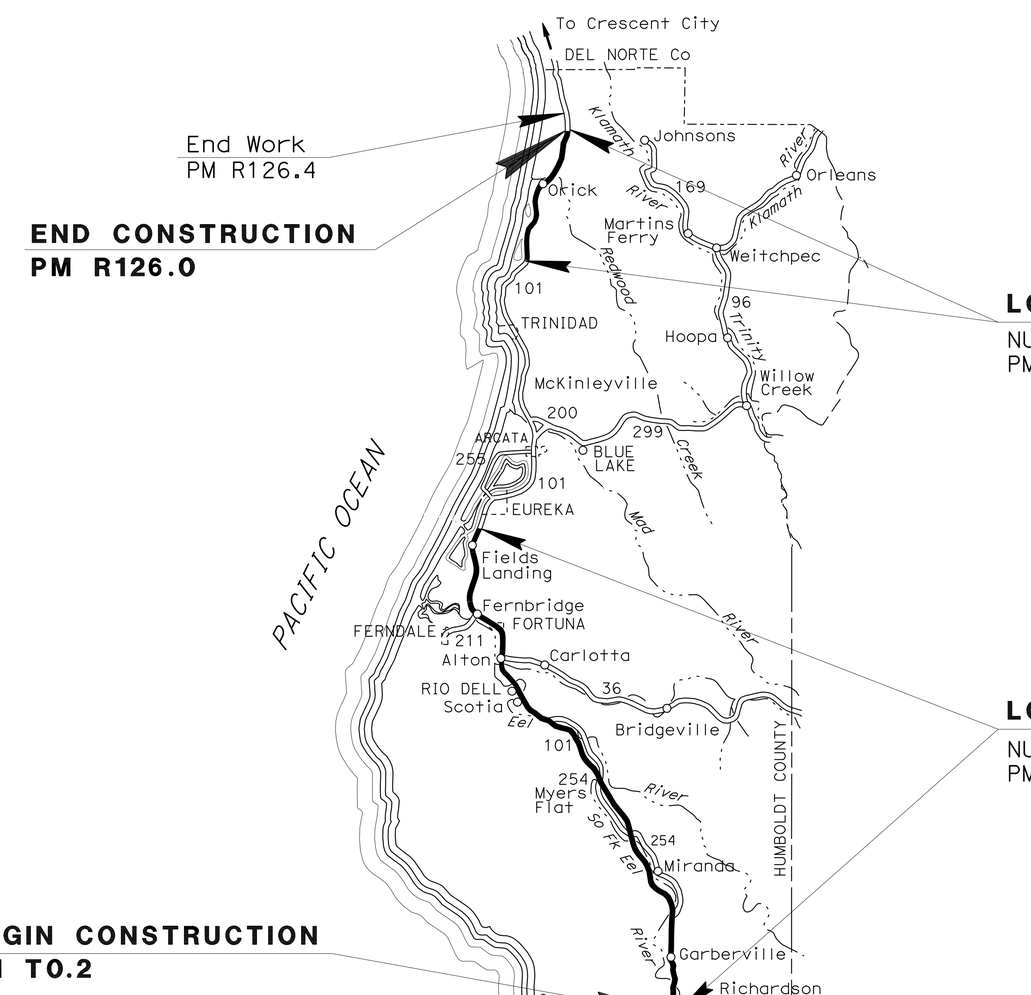


**LOCATIONS OF CONSTRUCTION**
NUMBERS 189 THROUGH 210
PM 113.50 TO PM 125.98

**LOCATIONS OF CONSTRUCTION**
NUMBERS 1 THROUGH 188
PM 0.18 TO PM 73.84

**BEGIN CONSTRUCTION**
**PM T0.2**

NO SCALE

THE CONTRACTOR SHALL POSSESS THE CLASS (OR CLASSES) OF LICENSE AS SPECIFIED IN THE "NOTICE TO BIDDERS."

PROJECT MANAGER: KIM FLOYD
DESIGN ENGINEER: L.R. ASHLEY

PROJECT ENGINEER REGISTERED CIVIL ENGINEER — DATE 6-26-09

REGISTERED PROFESSIONAL ENGINEER — BRENDA HARWELL No. 64471 Exp. 6/30/11 CIVIL — STATE OF CALIFORNIA

September 21, 2009
PLANS APPROVAL DATE

*THE STATE OF CALIFORNIA OR ITS OFFICERS OR AGENTS SHALL NOT BE RESPONSIBLE FOR THE ACCURACY OR COMPLETENESS OF SCANNED COPIES OF THIS PLAN SHEET.*

CONTRACT No. **01-464004**

LAST REVISION 06-25-09 | DATE PLOTTED => 23-FEB-2010 | TIME PLOTTED => 11:09

\\sv01s01\PSESUBMIT\01_464001\146400ab001.dgn

| Dist | COUNTY | ROUTE | POST MILES TOTAL PROJECT | SHEET No. | TOTAL SHEETS |
|---|---|---|---|---|---|
| 01 | Hum | 101 | T0.2/R126.0 | 2 | 72 |

REGISTERED CIVIL ENGINEER 6-26-09 DATE

9-21-09
PLANS APPROVAL DATE

REGISTERED PROFESSIONAL ENGINEER
BRENDA HARWELL
No. 64471
Exp. 6/30/11
CIVIL
STATE OF CALIFORNIA

*THE STATE OF CALIFORNIA OR ITS OFFICERS OR AGENTS SHALL NOT BE RESPONSIBLE FOR THE ACCURACY OR COMPLETENESS OF SCANNED COPIES OF THIS PLAN SHEET.*

## LOCATIONS OF CONSTRUCTION

| Loc | COUNTY | ROUTE | PM | Loc | COUNTY | ROUTE | PM | Loc | COUNTY | ROUTE | PM | Loc | COUNTY | ROUTE | PM |
|---|---|---|---|---|---|---|---|---|---|---|---|---|---|---|---|
| 1 | Hum | 101 | 0.18 | 54 | Hum | 101 | 13.68 | 107 | Hum | 101 | 27.35 | 160 | Hum | 101 | 60.48 |
| 2 | Hum | 101 | 0.31 | 55 | Hum | 101 | 13.71 | 108 | Hum | 101 | 27.69 | 161 | Hum | 101 | 60.48 |
| 3 | Hum | 101 | 5.18 | 56 | Hum | 101 | 13.80 | 109 | Hum | 101 | 27.70 | 162 | Hum | 101 | 60.65 |
| 4 | Hum | 101 | 5.47 | 57 | Hum | 101 | 13.88 | 110 | Hum | 101 | 27.87 | 163 | Hum | 101 | 60.68 |
| 5 | Hum | 101 | 5.61 | 58 | Hum | 101 | 14.06 | 111 | Hum | 101 | 27.87 | 164 | Hum | 101 | 61.35 |
| 6 | Hum | 101 | 5.61 | 59 | Hum | 101 | 14.08 | 112 | Hum | 101 | 27.94 | 165 | Hum | 101 | 61.50 |
| 7 | Hum | 101 | 5.90 | 60 | Hum | 101 | 14.09 | 113 | Hum | 101 | 27.95 | 166 | Hum | 101 | 61.62 |
| 8 | Hum | 101 | 5.90 | 61 | Hum | 101 | 14.30 | 114 | Hum | 101 | 40.61 | 167 | Hum | 101 | 61.62 |
| 9 | Hum | 101 | 6.92 | 62 | Hum | 101 | 14.38 | 115 | Hum | 101 | 40.61 | 168 | Hum | 101 | 62.21 |
| 10 | Hum | 101 | 7.75 | 63 | Hum | 101 | 14.38 | 116 | Hum | 101 | 41.20 | 169 | Hum | 101 | 62.25 |
| 11 | Hum | 101 | 7.75 | 64 | Hum | 101 | 14.38 | 117 | Hum | 101 | 41.40 | 170 | Hum | 101 | 63.07 |
| 12 | Hum | 101 | 7.80 | 65 | Hum | 101 | 15.14 | 118 | Hum | 101 | 41.70 | 171 | Hum | 101 | 63.11 |
| 13 | Hum | 101 | 7.80 | 66 | Hum | 101 | 15.73 | 119 | Hum | 101 | 41.75 | 172 | Hum | 101 | 65.89 |
| 14 | Hum | 101 | 8.00 | 67 | Hum | 101 | 16.49 | 120 | Hum | 101 | 41.98 | 173 | Hum | 101 | 65.90 |
| 15 | Hum | 101 | 8.12 | 68 | Hum | 101 | 16.50 | 121 | Hum | 101 | 42.33 | 174 | Hum | 101 | 65.96 |
| 16 | Hum | 101 | 8.42 | 69 | Hum | 101 | 16.93 | 122 | Hum | 101 | 42.73 | 175 | Hum | 101 | 65.98 |
| 17 | Hum | 101 | 8.42 | 70 | Hum | 101 | 17.20 | 123 | Hum | 101 | 42.98 | 176 | Hum | 101 | 70.02 |
| 18 | Hum | 101 | 8.59 | 71 | Hum | 101 | 17.88 | 124 | Hum | 101 | 43.03 | 177 | Hum | 101 | 70.35 |
| 19 | Hum | 101 | 8.60 | 72 | Hum | 101 | 18.05 | 125 | Hum | 101 | 43.03 | 178 | Hum | 101 | 70.79 |
| 20 | Hum | 101 | 8.60 | 73 | Hum | 101 | 18.06 | 126 | Hum | 101 | 43.28 | 179 | Hum | 101 | 71.25 |
| 21 | Hum | 101 | 8.79 | 74 | Hum | 101 | 18.24 | 127 | Hum | 101 | 43.28 | 180 | Hum | 101 | 72.01 |
| 22 | Hum | 101 | 10.15 | 75 | Hum | 101 | 18.33 | 128 | Hum | 101 | 43.30 | 181 | Hum | 101 | 72.04 |
| 23 | Hum | 101 | 10.15 | 76 | Hum | 101 | 18.55 | 129 | Hum | 101 | 43.34 | 182 | Hum | 101 | 72.39 |
| 24 | Hum | 101 | 10.52 | 77 | Hum | 101 | 18.65 | 130 | Hum | 101 | 43.34 | 183 | Hum | 101 | 72.87 |
| 25 | Hum | 101 | 10.54 | 78 | Hum | 101 | 19.63 | 131 | Hum | 101 | 43.35 | 184 | Hum | 101 | 72.87 |
| 26 | Hum | 101 | 10.77 | 79 | Hum | 101 | 19.68 | 132 | Hum | 101 | 43.41 | 185 | Hum | 101 | 72.90 |
| 27 | Hum | 101 | 10.86 | 80 | Hum | 101 | 19.72 | 133 | Hum | 101 | 44.15 | 186 | Hum | 101 | 72.90 |
| 28 | Hum | 101 | 11.11 | 81 | Hum | 101 | 19.72 | 134 | Hum | 101 | 44.20 | 187 | Hum | 101 | 73.72 |
| 29 | Hum | 101 | 11.11 | 82 | Hum | 101 | 20.10 | 135 | Hum | 101 | 44.77 | 188 | Hum | 101 | 73.72 |
| 30 | Hum | 101 | 11.25 | 83 | Hum | 101 | 21.81 | 136 | Hum | 101 | 45.05 | 189 | Hum | 101 | 113.50 |
| 31 | Hum | 101 | 11.29 | 84 | Hum | 101 | 22.39 | 137 | Hum | 101 | 45.41 | 190 | Hum | 101 | 114.09 |
| 32 | Hum | 101 | 11.35 | 85 | Hum | 101 | 22.40 | 138 | Hum | 101 | 45.56 | 191 | Hum | 101 | 115.51 |
| 33 | Hum | 101 | 11.40 | 86 | Hum | 101 | 22.45 | 139 | Hum | 101 | 45.59 | 192 | Hum | 101 | 116.35 |
| 34 | Hum | 101 | 11.49 | 87 | Hum | 101 | 22.45 | 140 | Hum | 101 | 45.89 | 193 | Hum | 101 | 120.01 |
| 35 | Hum | 101 | 11.49 | 88 | Hum | 101 | 22.45 | 141 | Hum | 101 | 45.92 | 194 | Hum | 101 | 120.01 |
| 36 | Hum | 101 | 11.52 | 89 | Hum | 101 | 22.76 | 142 | Hum | 101 | 45.92 | 195 | Hum | 101 | 120.03 |
| 37 | Hum | 101 | 11.60 | 90 | Hum | 101 | 23.00 | 143 | Hum | 101 | 45.94 | 196 | Hum | 101 | 120.03 |
| 38 | Hum | 101 | 11.62 | 91 | Hum | 101 | 23.00 | 144 | Hum | 101 | 45.97 | 197 | Hum | 101 | 121.08 |
| 39 | Hum | 101 | 11.79 | 92 | Hum | 101 | 23.03 | 145 | Hum | 101 | 46.15 | 198 | Hum | 101 | 121.08 |
| 40 | Hum | 101 | 11.86 | 93 | Hum | 101 | 23.04 | 146 | Hum | 101 | 46.14 | 199 | Hum | 101 | 121.21 |
| 41 | Hum | 101 | 12.03 | 94 | Hum | 101 | 23.49 | 147 | Hum | 101 | 46.23 | 200 | Hum | 101 | 121.21 |
| 42 | Hum | 101 | 12.06 | 95 | Hum | 101 | 23.53 | 148 | Hum | 101 | 46.23 | 201 | Hum | 101 | 122.85 |
| 43 | Hum | 101 | 12.26 | 96 | Hum | 101 | 23.87 | 149 | Hum | 101 | 46.27 | 202 | Hum | 101 | 122.85 |
| 44 | Hum | 101 | 12.26 | 97 | Hum | 101 | 23.94 | 150 | Hum | 101 | 46.27 | 203 | Hum | 101 | 122.86 |
| 45 | Hum | 101 | 12.48 | 98 | Hum | 101 | 23.94 | 151 | Hum | 101 | 46.39 | 204 | Hum | 101 | 122.88 |
| 46 | Hum | 101 | 12.49 | 99 | Hum | 101 | 24.34 | 152 | Hum | 101 | 46.42 | 205 | Hum | 101 | 124.69 |
| 47 | Hum | 101 | 12.90 | 100 | Hum | 101 | 25.00 | 153 | Hum | 101 | 46.82 | 206 | Hum | 101 | 124.69 |
| 48 | Hum | 101 | 12.90 | 101 | Hum | 101 | 25.00 | 154 | Hum | 101 | 46.97 | 207 | Hum | 101 | 124.71 |
| 49 | Hum | 101 | 12.99 | 102 | Hum | 101 | 25.19 | 155 | Hum | 101 | 47.23 | 208 | Hum | 101 | 124.71 |
| 50 | Hum | 101 | 13.31 | 103 | Hum | 101 | 25.79 | 156 | Hum | 101 | 47.90 | 209 | Hum | 101 | 124.83 |
| 51 | Hum | 101 | 13.48 | 104 | Hum | 101 | 27.06 | 157 | Hum | 101 | 47.97 | 210 | Hum | 101 | 125.78 |
| 52 | Hum | 101 | 13.61 | 105 | Hum | 101 | 27.08 | 158 | Hum | 101 | 48.00 | | | | |
| 53 | Hum | 101 | 13.62 | 106 | Hum | 101 | 27.32 | 159 | Hum | 101 | 48.01 | | | | |

# LOCATIONS OF CONSTRUCTION
# LC-1

REVISED BY | DATE REVISED
BRENDA C. HARWELL | TOM CARY
CALCULATED-DESIGNED BY | CHECKED BY
FUNCTIONAL SUPERVISOR: L.R. ASHLEY

STATE OF CALIFORNIA - DEPARTMENT OF TRANSPORTATION
Caltrans
DESIGN

S:\01_464001_add\146400ba001.dgn

LAST REVISION 06-25-09 | DATE PLOTTED => 23-SEP-2009 | TIME PLOTTED => 06:46

| Dist | COUNTY | ROUTE | POST MILES TOTAL PROJECT | SHEET No. | TOTAL SHEETS |
|---|---|---|---|---|---|
| 01 | Hum | 101 | T0.2/R126.0 | 3 | 72 |

REGISTERED CIVIL ENGINEER 6-26-09 DATE

9-21-09
PLANS APPROVAL DATE

REGISTERED PROFESSIONAL ENGINEER BRENDA HARWELL No. 64471 Exp. 6/30/11 CIVIL STATE OF CALIFORNIA

*THE STATE OF CALIFORNIA OR ITS OFFICERS OR AGENTS SHALL NOT BE RESPONSIBLE FOR THE ACCURACY OR COMPLETENESS OF SCANNED COPIES OF THIS PLAN SHEET.*

## DESIGN DESIGNATION (ROUTE 101)

| POSTMILE: | T0.08/R14.31 | R14.31/R17.91 | R17.91/R43.32 | R43.32/R50.78 | 59.11/61.53 | 61.53/64.29 | 64.29/70.61 | 70.61/73.74 | 108.25/R126.0 |
|---|---|---|---|---|---|---|---|---|---|
| 2011 ADT = | 6120 | 7650 | 6630 | 7750 | 13700 | 23900 | 22800 | 26500 | 5100 |
| 2031 ADT = | 6720 | 8400 | 7280 | 8510 | 17500 | 30600 | 29200 | 34000 | 6080 |
| DHV (2011) = | 950 | 1120 | 950 | 1070 | 1530 | 2610 | 2440 | 3020 | 720 |
| D = | 60% | 60% | 60% | 60% | 60% | 60% | 60% | 60% | 60% |
| T = | 12% | 13% | 13% | 13% | 8% | 6% | 6% | 6% | 9% |

**NOTE:** FOR LOCATIONS OF MBGR, GUARD RAILING DELINEATORS, AND HMA DIKE, SEE SUMMARY OF QUANTITIES SHEETS.

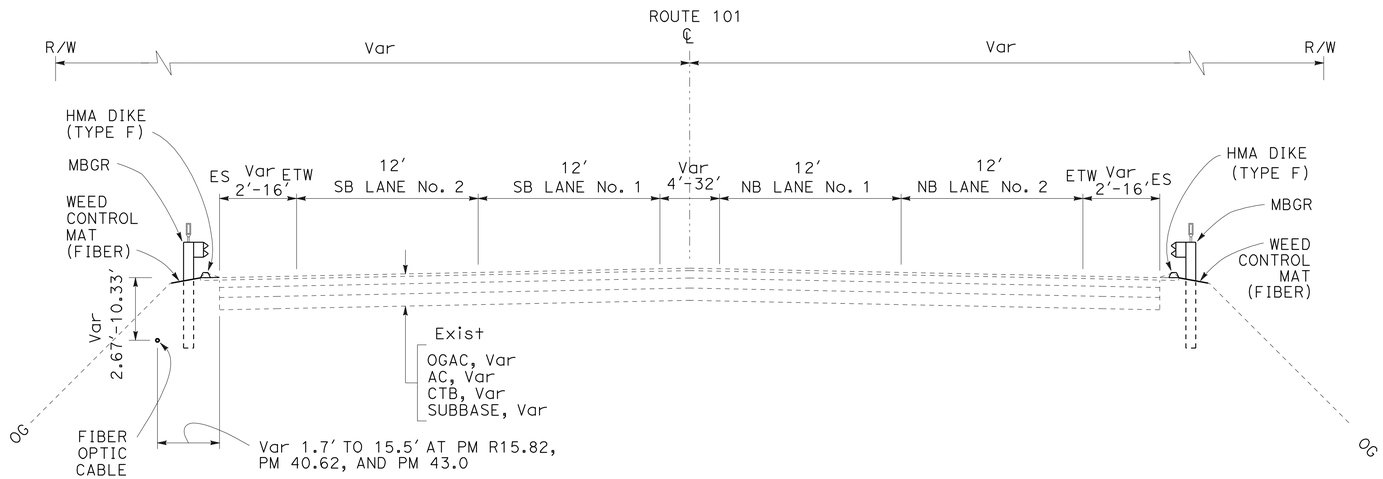


VARIOUS LOCATIONS BETWEEN
PM R5.60 TO PM 73.74

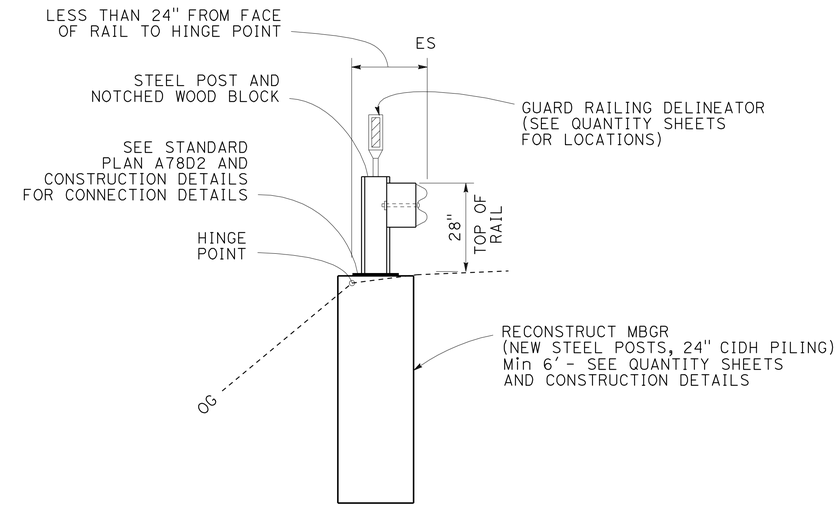


MBGR (24" Dia CIDH PILING)

PM 15.70, SB PM 40.78, NB
PM 40.62, SB PM 46.18, NB

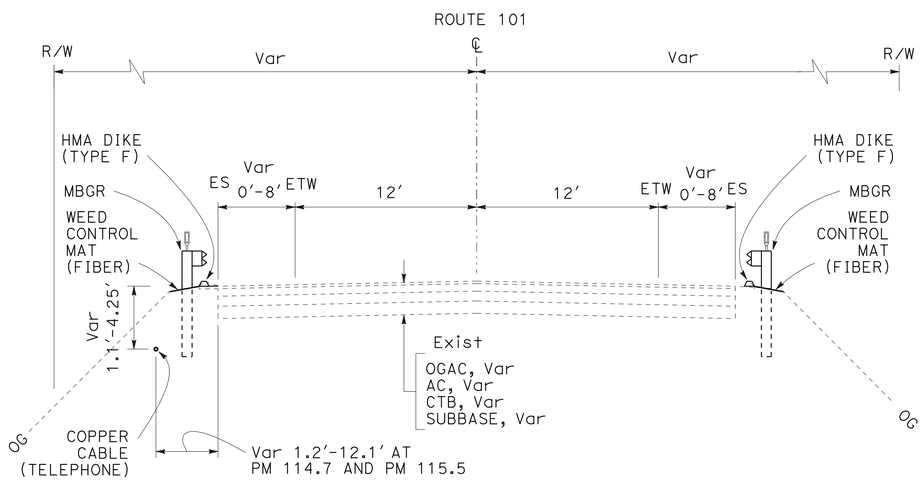


VARIOUS LOCATIONS BETWEEN
PM T0.18 TO PM 5.60
PM 113.50 TO PM R125.98

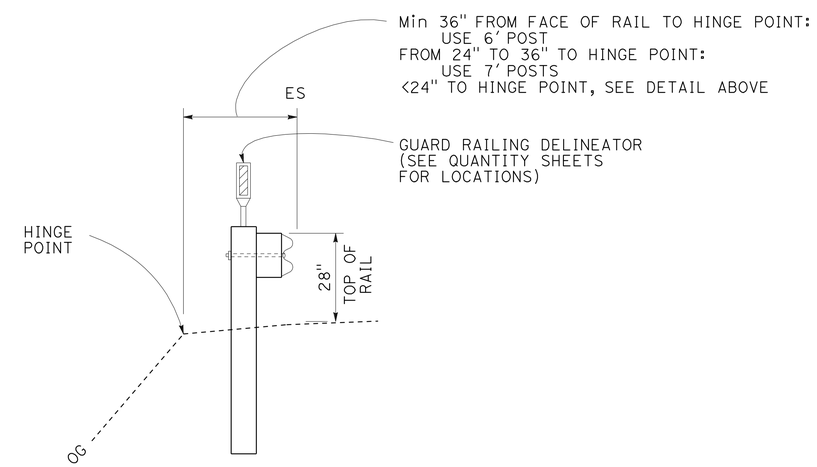


TYPICAL SECTION FROM FACE OF RAIL ELEMENT TO HINGE POINT

# TYPICAL CROSS SECTIONS

NO SCALE

**X-1**

REVISED BY | DATE REVISED
BRENDA C. HARWELL | TOM CARY
CALCULATED-DESIGNED BY | CHECKED BY
FUNCTIONAL SUPERVISOR
L.R. ASHLEY

STATE OF CALIFORNIA - DEPARTMENT OF TRANSPORTATION
Caltrans®
DESIGN

\\sv01s01\PSESUBMIT\01_464001\146400ca001.dgn

LAST REVISION 06-25-09
DATE PLOTTED => 23-SEP-2009
TIME PLOTTED => 06:46

| Dist | COUNTY | ROUTE | POST MILES TOTAL PROJECT | SHEET No. | TOTAL SHEETS |
|---|---|---|---|---|---|
| 01 | Hum | 101 | T0.2/R126.0 | 4 | 72 |

REGISTERED CIVIL ENGINEER 6-26-09 DATE

9-21-09
PLANS APPROVAL DATE

REGISTERED PROFESSIONAL ENGINEER BRENDA HARWELL No. 64471 Exp. 6/30/11 CIVIL STATE OF CALIFORNIA

*THE STATE OF CALIFORNIA OR ITS OFFICERS OR AGENTS SHALL NOT BE RESPONSIBLE FOR THE ACCURACY OR COMPLETENESS OF SCANNED COPIES OF THIS PLAN SHEET.*

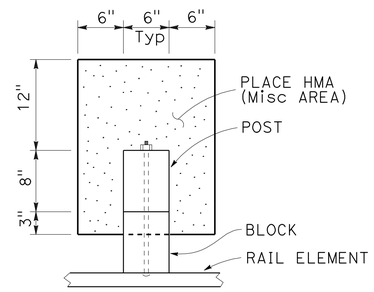


PLAN

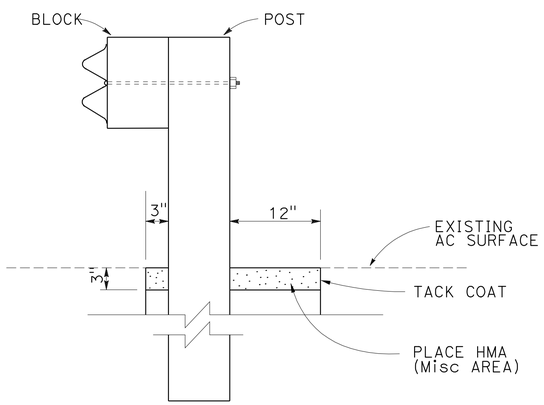


## MBGR IN EXISTING AC

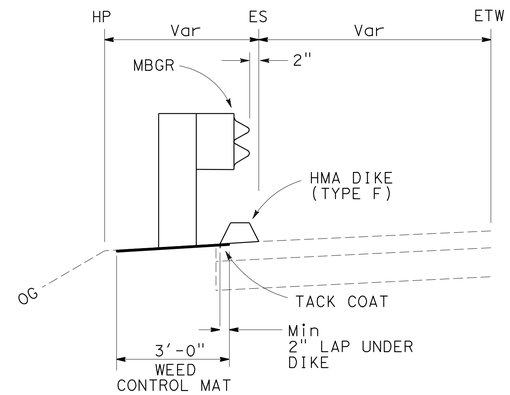


## WEED CONTROL MAT (FIBER) WITH NEW HMA DIKE (TYPE F)

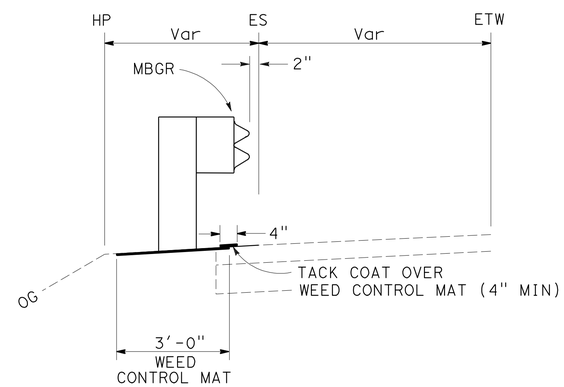


## WEED CONTROL MAT (FIBER) WITHOUT HMA DIKE

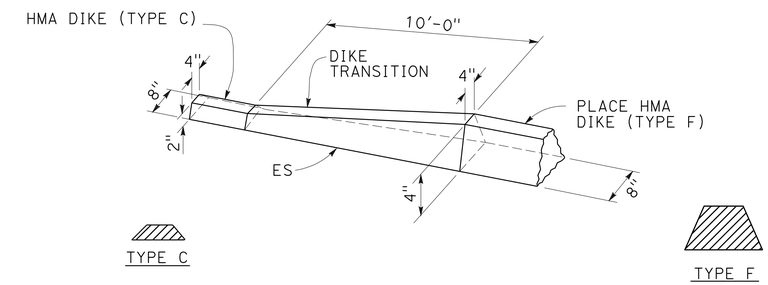


## HMA DIKE (TYPE C) TO HMA DIKE (TYPE F)

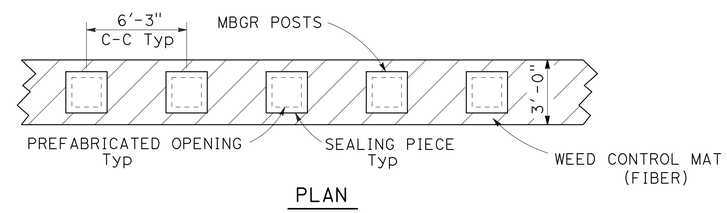


PLAN

## WEED CONTROL MAT (FIBER) UNDER MBGR

NOTE:

POST SPACING & OTHER DIMENSIONS TO BE VERIFIED IN THE FIELD BY THE CONTRACTOR.

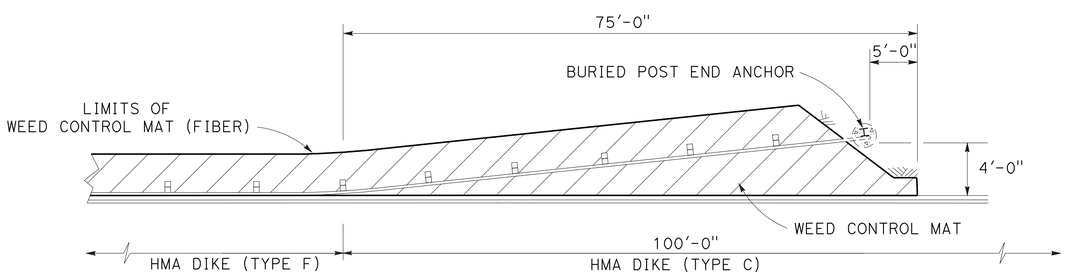


PLAN

## WEED CONTROL MAT (FIBER) AT BURIED POST END ANCHOR

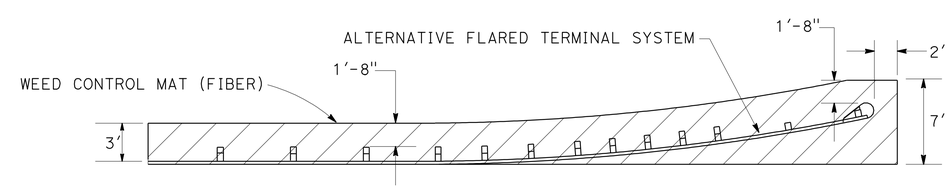


PLAN

## WEED CONTROL MAT (FIBER) UNDER ALTERNATIVE FLARED TERMINAL SYSTEM

# CONSTRUCTION DETAILS

NO SCALE

C-1

STATE OF CALIFORNIA - DEPARTMENT OF TRANSPORTATION
Caltrans®
DESIGN
FUNCTIONAL SUPERVISOR L.R. ASHLEY
CALCULATED-DESIGNED BY BRENDA C. HARWELL
CHECKED BY TOM CARY
REVISED BY
DATE REVISED

\\sv01s01\PSESUBMIT\01_464001\146400ga001.dgn

LAST REVISION 06-25-09
DATE PLOTTED => 23-SEP-2009
TIME PLOTTED => 06:46

| Dist | COUNTY | ROUTE | POST MILES TOTAL PROJECT | SHEET No. | TOTAL SHEETS |
|---|---|---|---|---|---|
| 01 | Hum | 101 | T0.2/R126.0 | 5 | 72 |

REGISTERED CIVIL ENGINEER 6-26-09 DATE

9-21-09
PLANS APPROVAL DATE

REGISTERED PROFESSIONAL ENGINEER BRENDA HARWELL No. 64471 Exp. 6/30/11 CIVIL STATE OF CALIFORNIA

*THE STATE OF CALIFORNIA OR ITS OFFICERS OR AGENTS SHALL NOT BE RESPONSIBLE FOR THE ACCURACY OR COMPLETENESS OF SCANNED COPIES OF THIS PLAN SHEET.*

NOTES:

1. FOR DETAILS NOT SHOWN SEE STANDARD PLAN A77A1.
2. NUMBER OF POSTS OMITTED TO BE DETERMINED BY THE ENGINEER.
3. LOCATIONS OF NESTING AS DIRECTED BY THE ENGINEER.

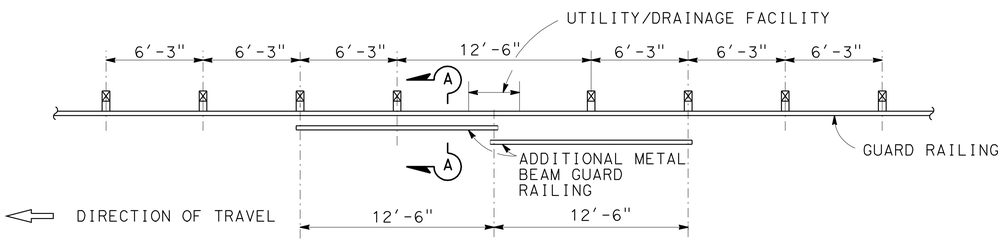


**CASE 1**
**ONE POST OMITTED (SPLICE IN CENTER)**

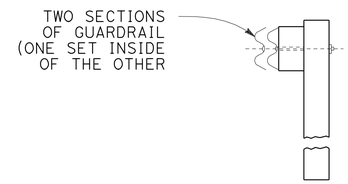


SECTION A-A

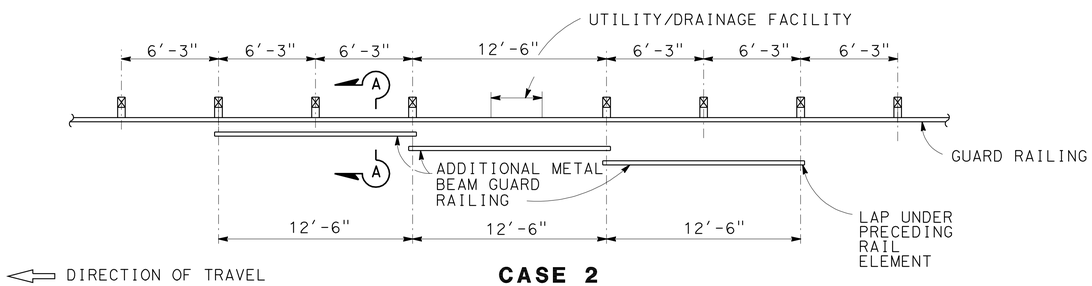


**CASE 2**
**ONE POST OMITTED (SPLICE AT POSTS)**

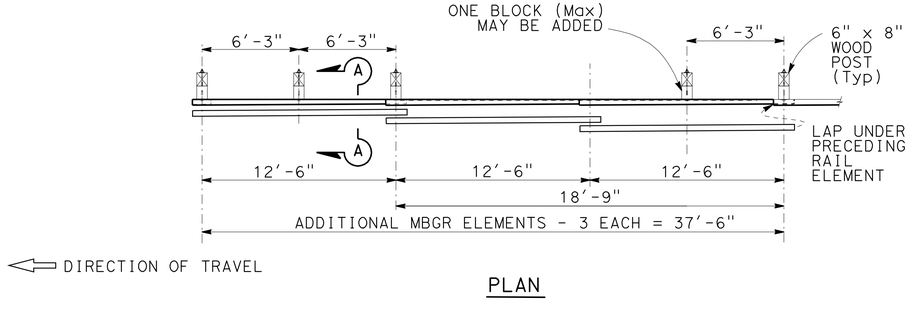


PLAN

ELEVATION

**TWO POSTS OMITTED**

**NESTED RAIL ELEMENT**

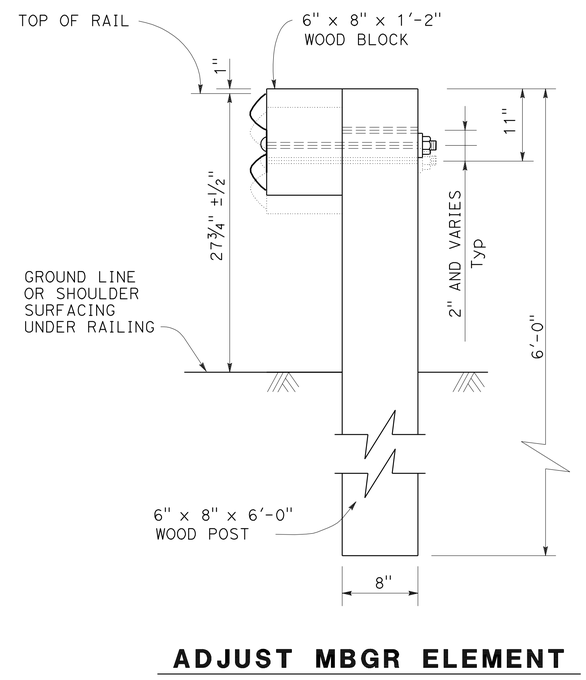


**ADJUST MBGR ELEMENT**

# CONSTRUCTION DETAILS

NO SCALE

**C-2**

REVISED BY | DATE REVISED
BRENDA C. HARWELL | TOM CARY
CALCULATED-DESIGNED BY | CHECKED BY
FUNCTIONAL SUPERVISOR | L.R. ASHLEY
STATE OF CALIFORNIA - DEPARTMENT OF TRANSPORTATION
DESIGN
Caltrans®
\\sv01s01\PSESUBMIT\01_464001\146400ga002.dgn

LAST REVISION 06-25-09 | DATE PLOTTED => 23-SEP-2009 | TIME PLOTTED => 06:47

| Dist | COUNTY | ROUTE | POST MILES TOTAL PROJECT | SHEET No. | TOTAL SHEETS |
|---|---|---|---|---|---|
| 01 | Hum | 101 | T0.2/R126.0 | 6 | 72 |

REGISTERED CIVIL ENGINEER 6-26-09 DATE

9-21-09
PLANS APPROVAL DATE

REGISTERED PROFESSIONAL ENGINEER
BRENDA HARWELL
No. 64471
Exp. 6/30/11
CIVIL
STATE OF CALIFORNIA

*THE STATE OF CALIFORNIA OR ITS OFFICERS OR AGENTS SHALL NOT BE RESPONSIBLE FOR THE ACCURACY OR COMPLETENESS OF SCANNED COPIES OF THIS PLAN SHEET.*

## NOTES:

1. SEE STANDARD PLAN A77C2 FOR STEEL POST WITH NOTCHED WOOD BLOCK CONSTRUCTION DETAILS.
2. FOR CIDH PILE DETAIL SEE STANDARD PLAN B2-3.
3. SEE STANDARD PLAN A77A2 FOR DETAILS NOT SHOWN.

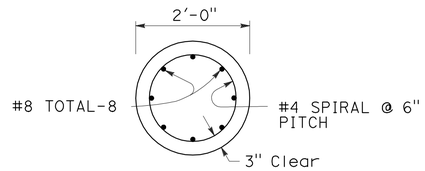


SECTION A-A

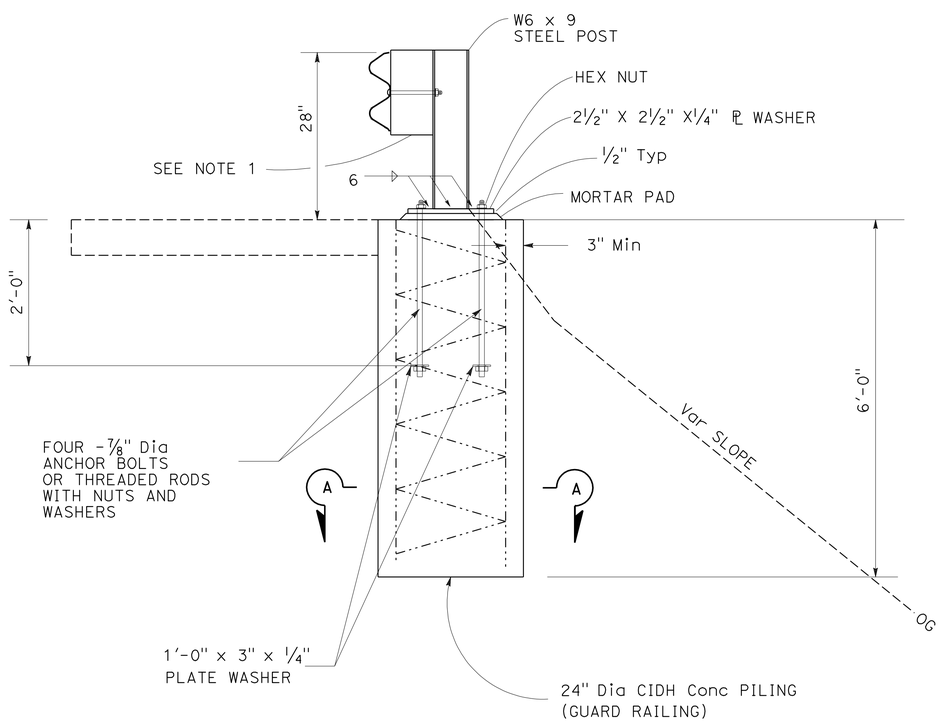


ELEVATION

## PILE DATA

| LOCATION (PM) | DIRECTION | (N) NUMBER OF PILES |
|---|---|---|
| 15.70 | SB | 4 |
| 40.62 | SB | 4 |
| 40.78 | NB | 4 |
| 46.18 | NB | 8 |

(N) NOT A SEPARATE PAY ITEM, FOR INFORMATION ONLY.

**NOTE:**
FOR MBGR (24" Dia CIDH PILING) QUANTITIES, SEE SHEET Q-10.

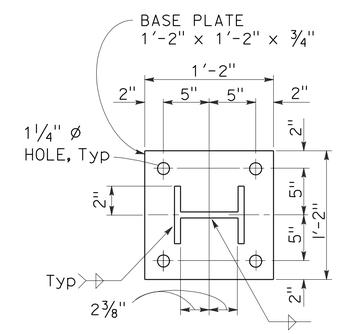


BASE PLATE PLAN

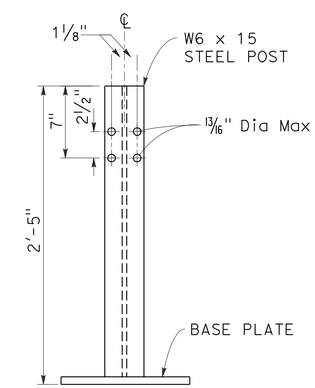


POST DETAILS

## RECONSTRUCT MBGR
## (NEW STEEL POSTS, 24" CIDH PILING)

# CONSTRUCTION DETAILS
NO SCALE **C-3**

STATE OF CALIFORNIA - DEPARTMENT OF TRANSPORTATION
Caltrans® DESIGN
FUNCTIONAL SUPERVISOR: L.R. ASHLEY
CALCULATED-DESIGNED BY: BRENDA C. HARWELL
CHECKED BY: TOM CARY
REVISED BY / DATE REVISED

\\sv01s01\PSESUBMIT\01_464001\146400ga003.dgn

LAST REVISION 06-25-09 | DATE PLOTTED => 23-SEP-2009 | TIME PLOTTED => 06:47

| Dist | COUNTY | ROUTE | POST MILES TOTAL PROJECT | SHEET No. | TOTAL SHEETS |
|---|---|---|---|---|---|
| 01 | Hum | 101 | T0.2/R126.0 | 7 | 72 |

REGISTERED CIVIL ENGINEER 6-26-09 DATE

9-21-09
PLANS APPROVAL DATE

REGISTERED PROFESSIONAL ENGINEER BRENDA HARWELL No. 64471 Exp. 6/30/11 CIVIL STATE OF CALIFORNIA

*THE STATE OF CALIFORNIA OR ITS OFFICERS OR AGENTS SHALL NOT BE RESPONSIBLE FOR THE ACCURACY OR COMPLETENESS OF SCANNED COPIES OF THIS PLAN SHEET.*

## NOTES:

1. FOR DETAILS NOT SHOWN SEE STANDARD PLAN A77A1 AND A77J4.
2. NUMBER OF POSTS OMITTED TO BE DETERMINED BY THE ENGINEER.
3. FOR DRAINAGE QUANTITIES (OVERSIDE DRAIN SUMMARY), SEE SHEET DQ-1.

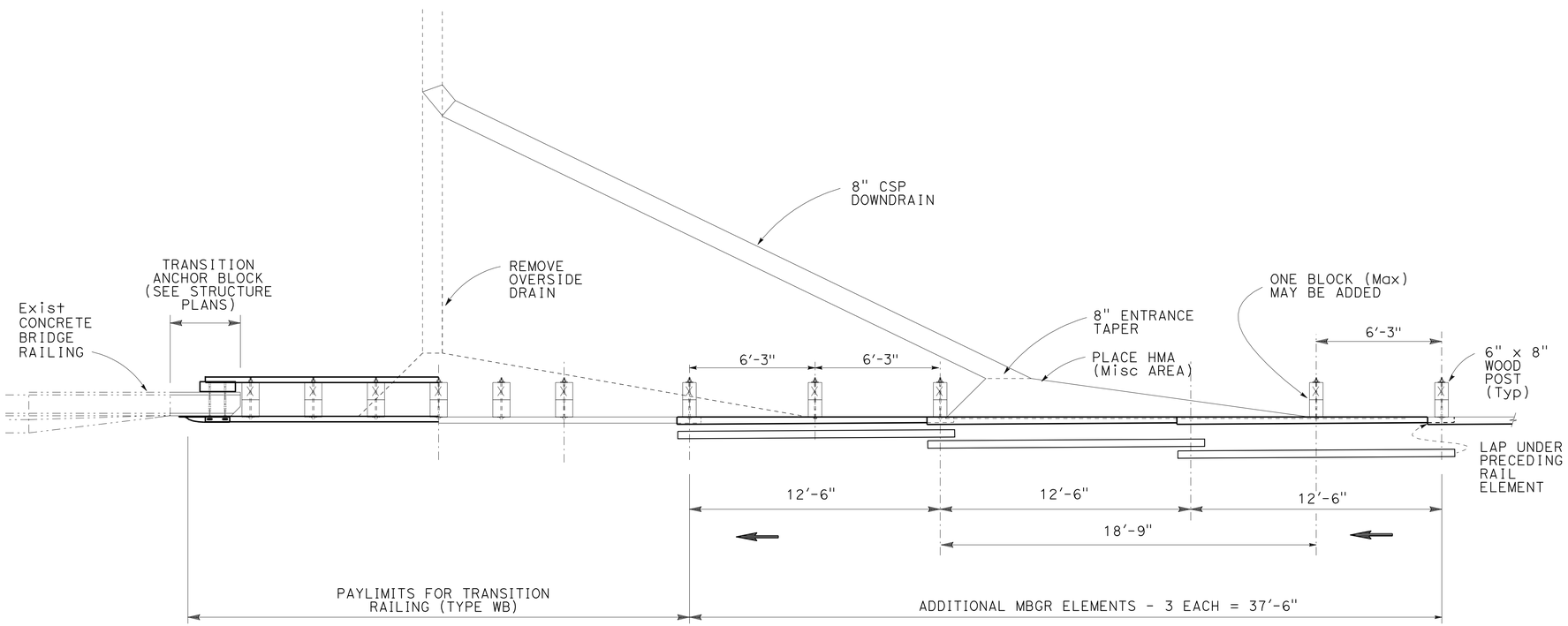


PLAN

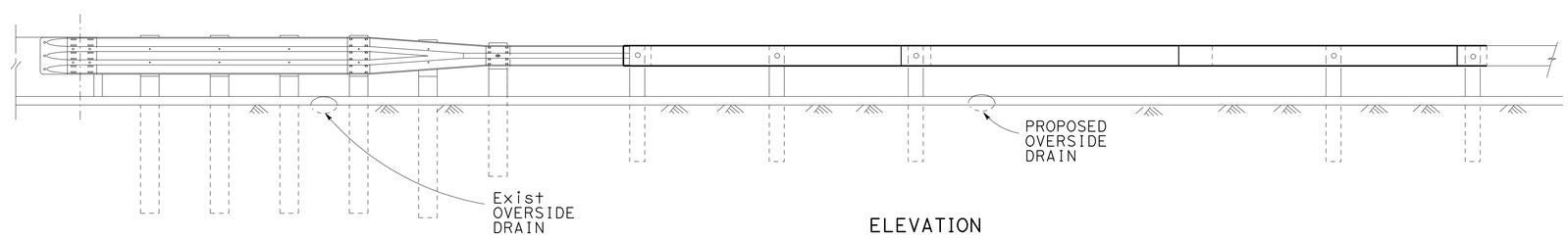


ELEVATION

## RELOCATE OVERSIDE DRAIN

TWO POSTS OMITTED

# DRAINAGE DETAILS

NO SCALE **DD-1**

STATE OF CALIFORNIA - DEPARTMENT OF TRANSPORTATION
Caltrans® DESIGN

FUNCTIONAL SUPERVISOR L.R. ASHLEY
CALCULATED-DESIGNED BY BRENDA C. HARWELL
CHECKED BY TOM CARY
REVISED BY
DATE REVISED

\\sv01s01\PSESUBMITT\01_464001\146400ic001.dgn

LAST REVISION 06-25-09
DATE PLOTTED => 23-SEP-2009
TIME PLOTTED => 06:47

| Dist | COUNTY | ROUTE | POST MILES TOTAL PROJECT | SHEET No. | TOTAL SHEETS |
|---|---|---|---|---|---|
| 01 | Hum | 101 | T0.2/R126.0 | 8 | 72 |

REGISTERED CIVIL ENGINEER 6-26-09 DATE

9-21-09
PLANS APPROVAL DATE

REGISTERED PROFESSIONAL ENGINEER
BRENDA HARWELL
No. 64471
Exp. 6/30/11
CIVIL
STATE OF CALIFORNIA

*THE STATE OF CALIFORNIA OR ITS OFFICERS OR AGENTS SHALL NOT BE RESPONSIBLE FOR THE ACCURACY OR COMPLETENESS OF SCANNED COPIES OF THIS PLAN SHEET.*

## NOTES:

1. FOR DETAILS NOT SHOWN SEE STANDARD PLAN D87A.
2. 20′ MINIMUM LENGTH OF GUTTER ON BOTH SIDES IN A SAG LOCATION.

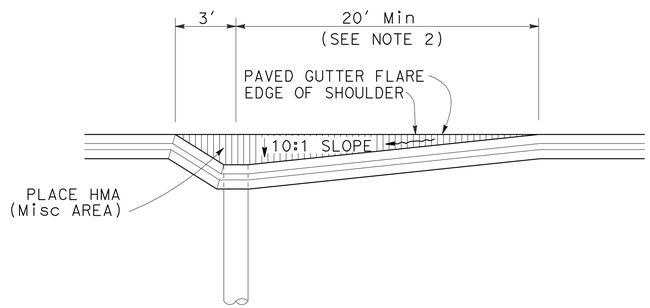


PLAN

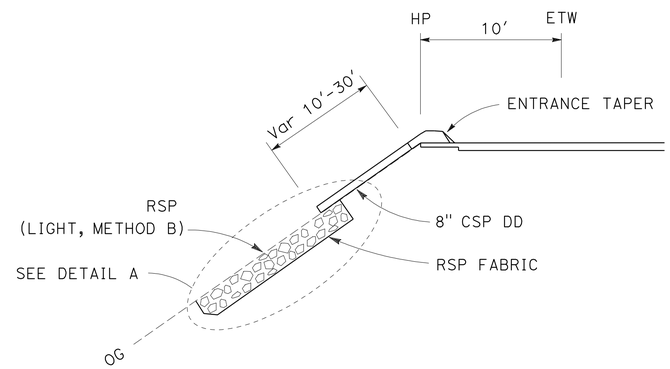


PROFILE

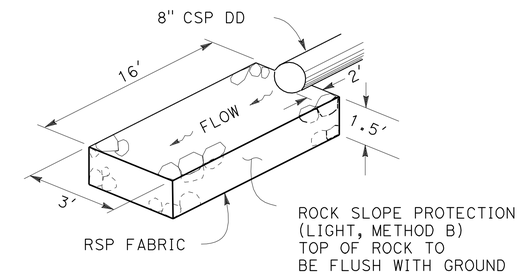


DETAIL A

# TYPE 1 OVERSIDE DRAIN DETAIL

## DRAINAGE DETAILS

NO SCALE **DD-2**

REVISED BY | DATE REVISED
BRENDA C. HARWELL | TOM CARY
CALCULATED-DESIGNED BY | CHECKED BY
FUNCTIONAL SUPERVISOR
L.R. ASHLEY

STATE OF CALIFORNIA - DEPARTMENT OF TRANSPORTATION
Caltrans
DESIGN

\\sv01s01\PSESUBMIT\01_464001\146400ic002.dgn

LAST REVISION 06-25-09
DATE PLOTTED => 23-SEP-2009
TIME PLOTTED => 06:47

| Dist | COUNTY | ROUTE | POST MILES TOTAL PROJECT | SHEET No. | TOTAL SHEETS |
|---|---|---|---|---|---|
| 01 | Hum | 101 | T0.2/R126.0 | 9 | 72 |

REGISTERED CIVIL ENGINEER 6-26-09 DATE

9-21-09
PLANS APPROVAL DATE

REGISTERED PROFESSIONAL ENGINEER BRENDA HARWELL No. 64471 Exp. 6/30/11 CIVIL STATE OF CALIFORNIA

THE STATE OF CALIFORNIA OR ITS OFFICERS OR AGENTS SHALL NOT BE RESPONSIBLE FOR THE ACCURACY OR COMPLETENESS OF SCANNED COPIES OF THIS PLAN SHEET.

LEGEND:

* HMA (TYPE A) IS INCLUDED IN ROADWAY QUANTITY SUMMARY.

** PLACE HMA (Misc AREA) IS INCLUDED IN ROADWAY QUANTITY SUMMARY.

# TYPE 1 OVERSIDE DRAIN SUMMARY

| LOCATION ROUTE 101 | DIRECTION | HMA (TYPE A) * | PLACE HMA (Misc AREA) ** | REMOVE OVERSIDE DRAIN | 8" ENTRANCE TAPER | 8" CORRUGATED STEEL PIPE DOWNDRAIN | 8" ANCHOR ASSEMBLY | ROCK SLOPE PROTECTION (LIGHT, METHOD B) | ROCK SLOPE PROTECTION FABRIC | REMARKS |
|---|---|---|---|---|---|---|---|---|---|---|
| POST MILE | | TON | SQYD | EA | EA | LF | EA | CY | SQYD | |
| 0.28 | NB | 0.41 | 2.40 | | | | | | | PAVED GUTTER FLARE |
| 5.97 | SB | 0.41 | 2.40 | 1 | 1 | 30 | | | | RELOCATE OVERSIDE DRAIN |
| 7.84 | SB | 0.41 | 2.40 | 1 | 1 | 30 | | | | RELOCATE OVERSIDE DRAIN |
| 8.42 | SB | 0.41 | 2.40 | | | | | | | PAVED GUTTER FLARE |
| 8.60 | SB | 0.41 | 2.40 | | | | | | | PAVED GUTTER FLARE |
| 8.79 | SB | 0.41 | 2.40 | 1 | 1 | 30 | | | | RELOCATE OVERSIDE DRAIN |
| 10.52 | NB | 0.41 | 2.40 | | | | | | | PAVED GUTTER FLARE |
| 10.54 | NB | 0.41 | 2.40 | | | | | | | PAVED GUTTER FLARE |
| 10.59 | SB | 0.41 | 2.40 | | | 10 | 1 | 2.6 | 10.6 | DD DISCONNECTED; HMA (Misc AREA); RSP |
| 12.75 | SB | 0.41 | 2.40 | | | | | | | PAVED GUTTER FLARE |
| 13.66 | NB | 0.41 | 2.40 | | | | | | | PAVED GUTTER FLARE |
| 13.71 | NB | 0.41 | 2.40 | | | | | | | PAVED GUTTER FLARE |
| 13.83 | NB | 0.41 | 2.40 | | | | | | | PAVED GUTTER FLARE |
| 14.08 | NB | 0.41 | 2.40 | | | 10 | 1 | 2.6 | 10.6 | PLACE RSP AT OVERSIDE DRAIN OUTLET, FILL ERODED AREA |
| 14.09 | NB | 0.41 | 2.40 | | | | | | | PAVED GUTTER FLARE |
| 14.38 | NB | 0.41 | 2.40 | 1 | 1 | 30 | | | | RELOCATE OVERSIDE DRAIN |
| 15.27 | SB | 0.41 | 2.40 | | | | | | | PAVED GUTTER FLARE |
| 15.97 | SB | 0.41 | 2.40 | | | | | | | PAVED GUTTER FLARE |
| 16.50 | SB | 0.41 | 2.40 | | | | | | | PAVED GUTTER FLARE |
| 18.05 | SB | 0.41 | 2.40 | | | | | | | PAVED GUTTER FLARE |
| 19.69 | NB | 0.41 | 2.40 | 1 | 1 | 30 | | | | RELOCATE OVERSIDE DRAIN |
| 20.23 | NB | 0.41 | 2.40 | | | | | | | PAVED GUTTER FLARE |
| 22.43 | SB | 0.41 | 2.40 | | | | | | | PAVED GUTTER FLARE |
| 23.00 | NB | 0.41 | 2.40 | | | | | | | PAVED GUTTER FLARE |
| 23.84 | NB | 0.41 | 2.40 | | | | | | | PAVED GUTTER FLARE |
| 24.08 | NB | 0.41 | 2.40 | | | | | | | PAVED GUTTER FLARE |
| 24.69 | NB | 0.41 | 2.40 | | | | | | | PAVED GUTTER FLARE |
| 27.70 | NB | 0.41 | 2.40 | 1 | 1 | 30 | | | | RELOCATE OVERSIDE DRAIN |
| 27.92 | NB | 0.41 | 2.40 | 1 | 1 | 30 | | | | RELOCATE OVERSIDE DRAIN |
| 43.38 | NB | 0.41 | 2.40 | | | | | | | PAVED GUTTER FLARE |
| 45.89 | NB | 0.41 | 2.40 | 1 | 1 | 30 | | | | RELOCATE OVERSIDE DRAIN |
| 45.92 | SB | 0.41 | 2.40 | 1 | 1 | 30 | | | | RELOCATE OVERSIDE DRAIN |
| 46.47 | NB | 0.41 | 2.40 | | | | | | | PAVED GUTTER FLARE |
| 47.97 | SB | 0.41 | 2.40 | 1 | 1 | 30 | | | | RELOCATE OVERSIDE DRAIN |
| 48.00 | NB | 0.41 | 2.40 | | | | | | | PAVED GUTTER FLARE |
| 61.50 | NB | 0.41 | 2.40 | | | | | | | PAVED GUTTER FLARE |
| 62.25 | SB | 0.41 | 2.40 | | | | | | | PAVED GUTTER FLARE |
| 63.11 | SB | 0.41 | 2.40 | | | | | | | PAVED GUTTER FLARE |
| 65.89 | NB | 0.41 | 2.40 | | | | | | | PAVED GUTTER FLARE - DRAINAGE FLUME, RAMP |
| 65.92 | SB | 0.41 | 2.40 | | | | | | | PAVED GUTTER FLARE - RAMP |
| 109.94 | SB | 0.41 | 2.40 | | | | | | | PAVED GUTTER FLARE |
| 114.09 | SB | 0.41 | 2.40 | | | | | | | PAVED GUTTER FLARE |
| 115.51 | SB | 0.41 | 2.40 | | | | | | | PAVED GUTTER FLARE |
| | TOTAL | 17.63 | 103.20 | 10 | 10 | 320 | 2 | 5.2 | 21.2 | |

## DRAINAGE QUANTITIES
## DQ-1

REVISED BY | DATE REVISED
BRENDA C. HARWELL | TOM CARY
CALCULATED-DESIGNED BY | CHECKED BY
FUNCTIONAL SUPERVISOR: L.R. ASHLEY

STATE OF CALIFORNIA - DEPARTMENT OF TRANSPORTATION
Caltrans
DESIGN

\\sv01s01\PSESUBMIT\01_464001\1464001d001.dgn

LAST REVISION 06-25-09 | DATE PLOTTED => 23-SEP-2009 | TIME PLOTTED => 06:47

| Dist | COUNTY | ROUTE | POST MILES TOTAL PROJECT | SHEET No. | TOTAL SHEETS |
|---|---|---|---|---|---|
| 01 | Hum | 101 | T0.2/R126.0 | 10 | 72 |

REGISTERED CIVIL ENGINEER 6-26-09 DATE

9-21-09
PLANS APPROVAL DATE

REGISTERED PROFESSIONAL ENGINEER BRENDA HARWELL No. 64471 Exp. 6/30/11 CIVIL STATE OF CALIFORNIA

*THE STATE OF CALIFORNIA OR ITS OFFICERS OR AGENTS SHALL NOT BE RESPONSIBLE FOR THE ACCURACY OR COMPLETENESS OF SCANNED COPIES OF THIS PLAN SHEET.*

NOTES:

1. LOCATIONS OF UTILITY FACILITIES SHOWN ON THESE PLANS ARE APPROXIMATE AND SHALL BE VERIFIED BY THE CONTRACTOR PRIOR TO CONSTRUCTION.
2. COORDINATE VALUES SHOWN ARE CCS83(2004.69), ZONE 1.
3. ELEVATION IS BASED ON NAVD88 DATUM.

LEGEND:

FO = BURIED FIBER OPTIC CABLE

## POTHOLE LOCATION TABLE

| ⬠ | UTILITY | NORTHING | EASTING | UTILITY ELEVATION | DEPTH (Ft) | CONTROL POINTS |
|---|---|---|---|---|---|---|
| 18 | FO - AT&T | 1,945,828.66 | 6,060,260.72 | 314.86 | 5.33 | |
| 17 | | 1,945,877.05 | 6,060,316.92 | 313.48 | 3.92 | |
| 16 | | 1,945,949.86 | 6,060,398.19 | 313.88 | 3.58 | |
| 15 | | 1,946,008.38 | 6,060,461.43 | 312.51 | 3.25 | |
| 14 | | 1,946,070.27 | 6,060,532.20 | 310.12 | 4.00 | |
| 13 | | 1,946,144.09 | 6,060,607.20 | 306.54 | 7.25 | |
| 12 | | 1,946,225.25 | 6,060,675.19 | 303.44 | 6.08 | |
| 11 | | 1,946,297.58 | 6,060,730.11 | 306.92 | 3.00 | |
| 10 | | 1,946,350.91 | 6,060,768.54 | 302.68 | 5.83 | |
| 9 | | 1,946,413.21 | 6,060,807.91 | 302.16 | 5.75 | |
| 8 | | 1,946,496.30 | 6,060,854.30 | 299.24 | 6.50 | |
| 7 | | 1,946,615.02 | 6,060,923.30 | 300.96 | 3.00 | |
| 6 | | 1,946,678.43 | 6,060,960.14 | 299.60 | 4.42 | |
| 5 | | 1,946,778.57 | 6,061,021.10 | 297.73 | 5.33 | |
| 4 | | 1,946,851.71 | 6,061,068.99 | 296.46 | 4.58 | |
| 3 | | 1,946,939.29 | 6,061,139.98 | 294.26 | 5.50 | |
| 2 | | 1,946,988.96 | 6,061,175.41 | 293.99 | 3.91 | |
| 1 | | 1,947,027.64 | 6,061,208.30 | N/A | N/A | SUHV1606 |
| | | 1,945,812.43 | 6,060,230.86 | N/A | N/A | SUHV903 |

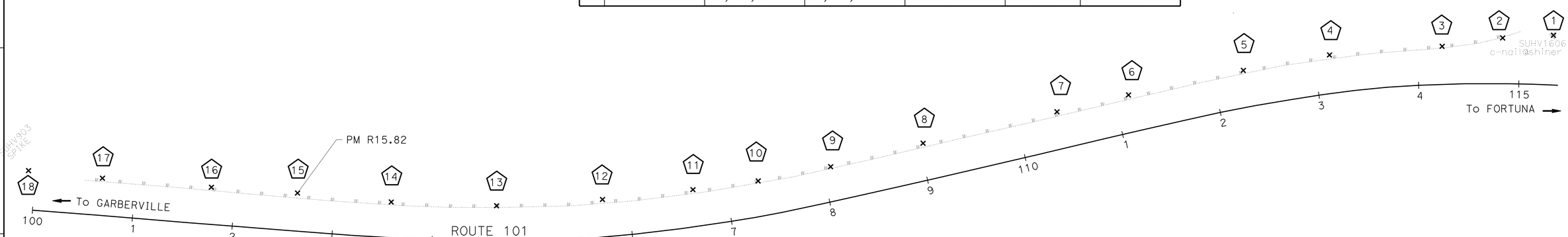


## UTILITY POTHOLE LOCATION PLAN

PM R15.82

HAND EXCAVATE SELECTED MBGR HOLES
IN CONFLICT WITH HIGH RISK UTILITIES
FROM Sta 100+00 TO Sta 102+06

FROM Sta 100+00 TO Sta 100+06 - RELOCATE TERMINAL SYSTEM
FROM Sta 100+06 TO Sta 100+56 - MBGR (WOOD POST)
FROM Sta 100+56 TO Sta 101+56 - RECONSTRUCT MBGR (7' POSTS)
FROM Sta 101+56 TO Sta 102+06 - MBGR (24" Dia CIDH PILING)
FROM Sta 102+06 TO Sta 114+62.5 - ADJUST MBGR

THIS PLAN ACCURATE FOR UTILITY INFORMATION ONLY.

# UTILITY PLAN

SCALE: 1"=50'

U-1

REVISED BY | DATE REVISED
BRENDA C. HARWELL | TOM CARY
CALCULATED-DESIGNED BY | CHECKED BY
FUNCTIONAL SUPERVISOR
L.R. ASHLEY

STATE OF CALIFORNIA - DEPARTMENT OF TRANSPORTATION
Caltrans
DESIGN

\\sv01s01\PSESUBMIT\01_464001\146400ka001.dgn

LAST REVISION 06-25-09 | DATE PLOTTED => 23-SEP-2009 | TIME PLOTTED => 06:47

| Dist | COUNTY | ROUTE | POST MILES TOTAL PROJECT | SHEET No. | TOTAL SHEETS |
|---|---|---|---|---|---|
| 01 | Hum | 101 | T0.2/R126.0 | 11 | 72 |

REGISTERED CIVIL ENGINEER 6-26-09 DATE

9-21-09
PLANS APPROVAL DATE

REGISTERED PROFESSIONAL ENGINEER
BRENDA HARWELL
No. 64471
Exp. 6/30/11
CIVIL
STATE OF CALIFORNIA

*THE STATE OF CALIFORNIA OR ITS OFFICERS OR AGENTS SHALL NOT BE RESPONSIBLE FOR THE ACCURACY OR COMPLETENESS OF SCANNED COPIES OF THIS PLAN SHEET.*

NOTE:

LOCATIONS OF UTILITY FACILITIES SHOWN ON THESE PLANS ARE APPROXIMATE AND SHALL BE VERIFIED BY THE CONTRACTOR PRIOR TO CONSTRUCTION.

## POTHOLE LOCATION TABLE

| ⬠ | UTILITY | NORTHING | EASTING | UTILITY ELEVATION | DEPTH (Ft) | CONTROL POINTS |
|---|---|---|---|---|---|---|
| 1 | FO - AT&T | 2,038,626.89 | 6,015,980.88 | 312.25 | 5.58 | |
| 2 | | 2,038,545.97 | 6,016,035.70 | 304.58 | 8.00 | |
| 3 | | 2,038,466.07 | 6,016,086.17 | 306.65 | 6.00 | |
| 4 | | 2,038,377.31 | 6,016,144.19 | 301.60 | 10.25 | |
| 5 | | 2,038,331.75 | 6,016,178.48 | 301.15 | 9.42 | |
| 6 | | 2,038,251.71 | 6,016,228.70 | 302.15 | 8.67 | |
| 7 | | 2,038,188.29 | 6,016,257.86 | 302.08 | 8.50 | |
| 8 | | 2,038,119.36 | 6,016,304.16 | 300.50 | 10.33 | |
| | | 2,038,775.39 | 6,015,883.71 | N/A | N/A | SUHV4077 |
| | | 2,038,605.66 | 6,016,076.58 | N/A | N/A | SUHV4073 |

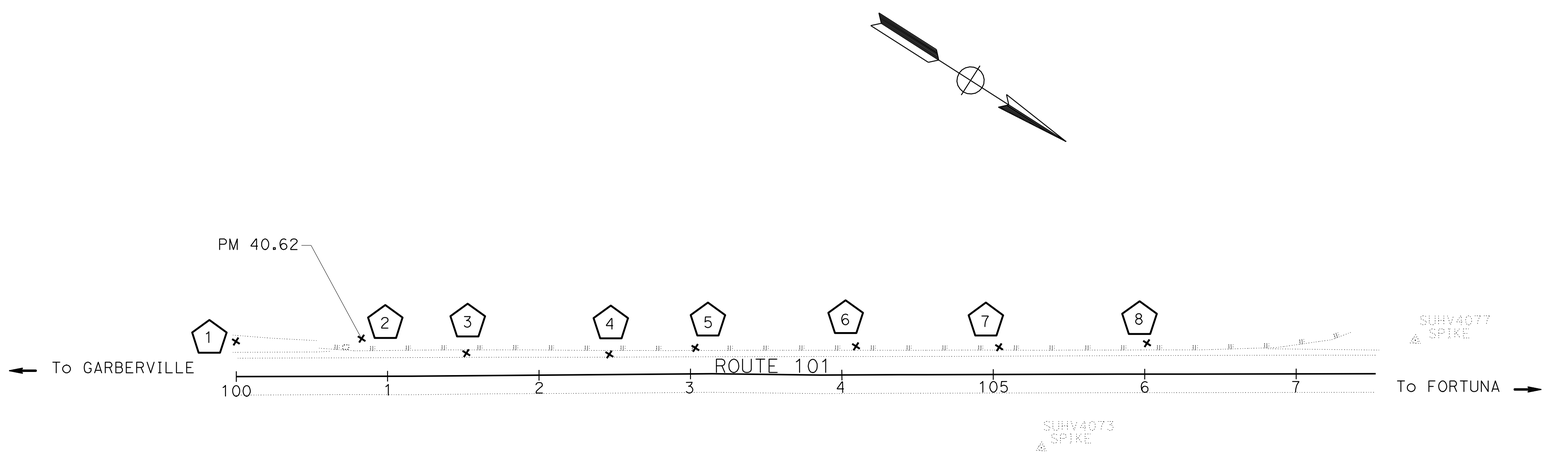


## UTILITY POTHOLE LOCATION PLAN

PM 40.62

HAND EXCAVATE SELECTED MBGR HOLES
IN CONFLICT WITH HIGH RISK UTILITIES
FROM Sta 100+50 TO Sta 107+37.5

FROM Sta 100+50 TO Sta 102+75 - RECONSTRUCT MBGR (7' POSTS)
FROM Sta 102+50 TO Sta 102+75 - MBGR (24" Dia CIDH PILING)
FROM Sta 102+75 TO Sta 107+00 - RECONSTRUCT MBGR (WOOD POST)
FROM Sta 107+00 TO Sta 107+37.5 - ALTERNATIVE FLARED TERMINAL SYSTEM

THIS PLAN ACCURATE FOR UTILITY INFORMATION ONLY.

SCALE: 1"=50'

**UTILITY PLAN**
**U-2**

REVISED BY | DATE REVISED
BRENDA C. HARWELL | TOM CARY
CALCULATED-DESIGNED BY | CHECKED BY
FUNCTIONAL SUPERVISOR: L.R. ASHLEY
STATE OF CALIFORNIA - DEPARTMENT OF TRANSPORTATION
Caltrans
DESIGN

\\sv01s01\PSESUBMIT\01_464001\146400ka002.dgn

LAST REVISION 06-25-09 | DATE PLOTTED => 23-SEP-2009 | TIME PLOTTED => 06:48

BORDER LAST REVISED 4/11/2008 | RELATIVE BORDER SCALE IS IN INCHES 0 1 2 3 | USERNAME => trmikesl | DGN FILE => 146400ka002.dgn | CU 03232 | EA 464001

| Dist | COUNTY | ROUTE | POST MILES TOTAL PROJECT | SHEET No. | TOTAL SHEETS |
|---|---|---|---|---|---|
| 01 | Hum | 101 | T0.2/R126.0 | 12 | 72 |

REGISTERED CIVIL ENGINEER 6-26-09 DATE

9-21-09
PLANS APPROVAL DATE

REGISTERED PROFESSIONAL ENGINEER
BRENDA HARWELL
No. 64471
Exp. 6/30/11
CIVIL
STATE OF CALIFORNIA

*THE STATE OF CALIFORNIA OR ITS OFFICERS OR AGENTS SHALL NOT BE RESPONSIBLE FOR THE ACCURACY OR COMPLETENESS OF SCANNED COPIES OF THIS PLAN SHEET.*

NOTE:

LOCATIONS OF UTILITY FACILITIES SHOWN ON THESE PLANS ARE APPROXIMATE AND SHALL BE VERIFIED BY THE CONTRACTOR PRIOR TO CONSTRUCTION.

## POTHOLE LOCATION TABLE

| ⬠ | UTILITY | NORTHING | EASTING | UTILITY ELEVATION | DEPTH (Ft) | CONTROL POINT |
|---|---|---|---|---|---|---|
| 1 | FO - AT&T | 2,046,845.30 | 6,009,016.04 | 156.13 | 7.50 | |
| 2 | | 2,046,753.68 | 6,009,050.27 | 155.50 | 5.00 | |
| 3 | | 2,046,536.80 | 6,009,127.26 | 155.80 | 2.67 | |
| 4 | | 2,046,469.93 | 6,009,151.08 | 153.18 | 3.42 | |
| | | 2,046,886.22 | 6,009,009.92 | N/A | N/A | PRHV4305 |

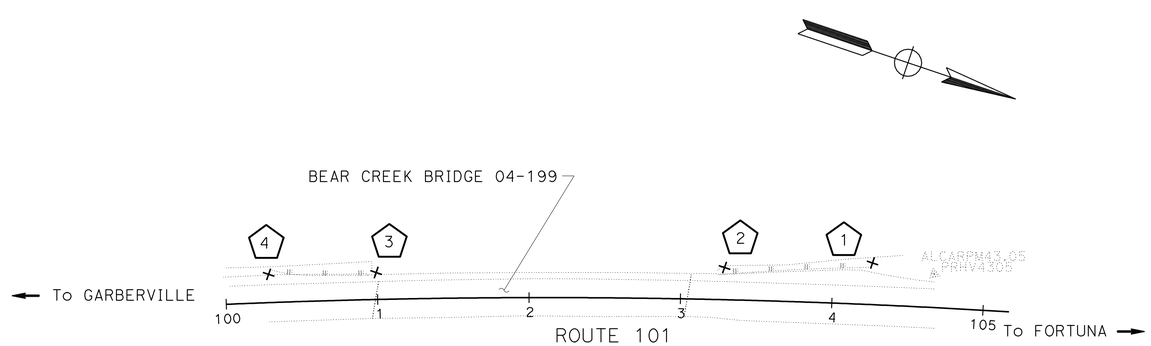


## UTILITY POTHOLE LOCATION PLAN

PM 43.0

HAND EXCAVATE SELECTED MBGR HOLES
IN CONFLICT WITH HIGH RISK UTILITIES
FROM Sta 100+30 TO Sta 101+00

THIS PLAN ACCURATE FOR UTILITY INFORMATION ONLY.

SCALE: 1"=50'

**UTILITY PLAN**
**U-3**

REVISED BY | DATE REVISED
BRENDA C. HARWELL | TOM CARY
CALCULATED-DESIGNED BY | CHECKED BY
FUNCTIONAL SUPERVISOR: L.R. ASHLEY
STATE OF CALIFORNIA - DEPARTMENT OF TRANSPORTATION
Caltrans
DESIGN

\\sv01s01\PSESUBMIT\01_464001\146400ka003.dgn

LAST REVISION 06-25-09 | DATE PLOTTED => 23-SEP-2009 | TIME PLOTTED => 06:48

| Dist | COUNTY | ROUTE | POST MILES TOTAL PROJECT | SHEET No. | TOTAL SHEETS |
|---|---|---|---|---|---|
| 01 | Hum | 101 | T0.2/R126.0 | 13 | 72 |

REGISTERED CIVIL ENGINEER 6-26-09 DATE

9-21-09
PLANS APPROVAL DATE

REGISTERED PROFESSIONAL ENGINEER
BRENDA HARWELL
No. 64471
Exp. 6/30/11
CIVIL
STATE OF CALIFORNIA

THE STATE OF CALIFORNIA OR ITS OFFICERS OR AGENTS SHALL NOT BE RESPONSIBLE FOR THE ACCURACY OR COMPLETENESS OF SCANNED COPIES OF THIS PLAN SHEET.

NOTE:

LOCATIONS OF UTILITY FACILITIES SHOWN ON THESE PLANS ARE APPROXIMATE AND SHALL BE VERIFIED BY THE CONTRACTOR PRIOR TO CONSTRUCTION.

## ELECTRONIC DETECTION LOCATION TABLE

| ⬡ | UTILITY | NORTHING | EASTING | DEPTH (Ft) | CONTROL POINT |
|---|---|---|---|---|---|
| 0 | VERIZON (TELEPHONE, COPPER CABLE) | 2,339,940.48 | 5,988,679.99 | 1.15 | |
| 1 | | 2,340,091.98 | 5,988,658.23 | 1.10 | |
| 2 | | 2,340,092.13 | 5,988,619.44 | 1.60 | |
| 3 | | 2,340,122.05 | 5,988,600.68 | 1.50 | |
| 4 | | 2,340,135.68 | 5,988,594.82 | 2.15 | |
| | | 2,339,933.32 | 5,988,684.49 | N/A | SUHV11551 |

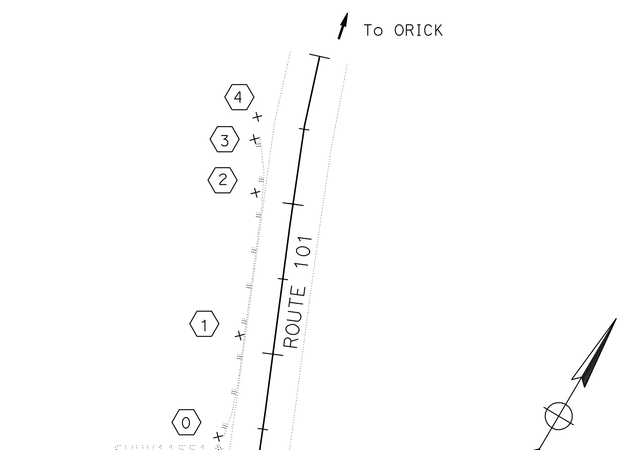


## UTILITY LOCATION PLAN
PM 115.51

THIS PLAN ACCURATE FOR UTILITY INFORMATION ONLY.

SCALE: 1"=50'

## UTILITY PLAN
U-4

| REVISED BY | DATE REVISED |
|---|---|
| BRENDA C. HARWELL | TOM CARY |
| CALCULATED-DESIGNED BY | CHECKED BY |
| FUNCTIONAL SUPERVISOR | L.R. ASHLEY |

STATE OF CALIFORNIA - DEPARTMENT OF TRANSPORTATION
Caltrans
DESIGN

\\sv01s01\PSESUBMIT\01_464001\146400ka004.dgn

LAST REVISION 06-25-09
DATE PLOTTED => 23-SEP-2009
TIME PLOTTED => 06:48

| Dist | COUNTY | ROUTE | POST MILES TOTAL PROJECT | SHEET No. | TOTAL SHEETS |
|---|---|---|---|---|---|
| 01 | Hum | 101 | T0.2/R126.0 | 14 | 72 |

REGISTERED CIVIL ENGINEER 6-26-09 DATE

9-21-09
PLANS APPROVAL DATE

REGISTERED PROFESSIONAL ENGINEER
BRENDA HARWELL
No. 64471
Exp. 6/30/11
CIVIL
STATE OF CALIFORNIA

*THE STATE OF CALIFORNIA OR ITS OFFICERS OR AGENTS SHALL NOT BE RESPONSIBLE FOR THE ACCURACY OR COMPLETENESS OF SCANNED COPIES OF THIS PLAN SHEET.*

NOTE:

EXACT LOCATION OF K-RAIL AND CHANNELIZERS TO BE DETERMINED BY THE ENGINEER.

LEGEND:

● = CHANNELIZER (SURFACE MOUNTED)

## TRAFFIC HANDLING QUANTITIES

| | BRIDGE NO. | STRUCTURE NAME | LOCATION (PM) | DIRECTION | LENGTH OF TRANSITION ANCHOR BLOCK | RECONSTRUCT MBGR (NEW STEEL POSTS, 24" CIDH PILING) | CHANNELIZER (SURFACE MOUNTED) | TEMPORARY RAILING (TYPE K) | TEMPORARY CRASH CUSHION (ABSORB 350) |
|---|---|---|---|---|---|---|---|---|---|
| | | | | | FT | FT | EA | LF | EA |
| TRANSITION ANCHOR BLOCKS GREATER THAN 10′ | 04-0006S | DEAN CREEK OFF-RAMP (LT) | 14.31 | NB | 20 | | 23 | 40 | 1 |
| | 04-0065 | SO FORK EEL RIVER BRIDGE B&S | 17.89 | NB/SB | | | 46 | 80 | 2 |
| | 04-0176 | SALMON CREEK | 23.89 | NB/SB | | | 46 | 80 | 2 |
| | 04-0072 | EAGLE POINT SIDEHILL VIADUCT | 27.07 | NB/SB | | | 46 | 80 | 2 |
| | | | | | | | | | |
| | 04-0006 | DEAN CREEK | 14.31 | NB/SB | 40 | | 46 | 120 | 2 |
| | 04-0124 | MYERS FLAT SEPARATION | 27.92 | NB/SB | | | 46 | 120 | 2 |
| | 04-0145 | FORTUNA OH | 61.53 | NB/SB | | | 46 | 120 | 2 |
| RECONSTRUCT MBGR (NEW STEEL POSTS, 24" CIDH PILING) | | | | | | | | | |
| | | | 15.70 | SB | | 25 | 20 | 40 | 1 |
| | | | 40.62 | SB | | 25 | 20 | 40 | 1 |
| | | | 40.78 | NB | | 25 | 20 | 40 | 1 |
| | | | 46.18 | NB | | 50 | 20 | 60 | 1 |
| | | | | | | TOTAL | 379 | 820 | 17 |

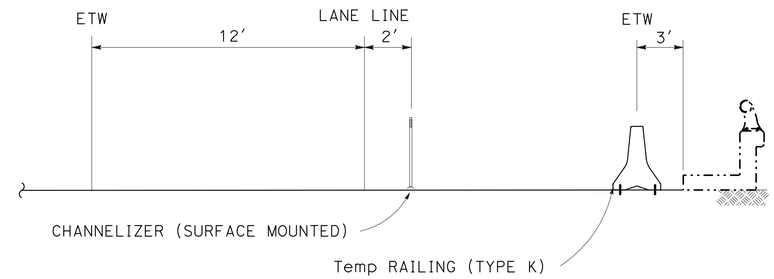


## TEMPORARY RAILING (TYPE K) PLACEMENT

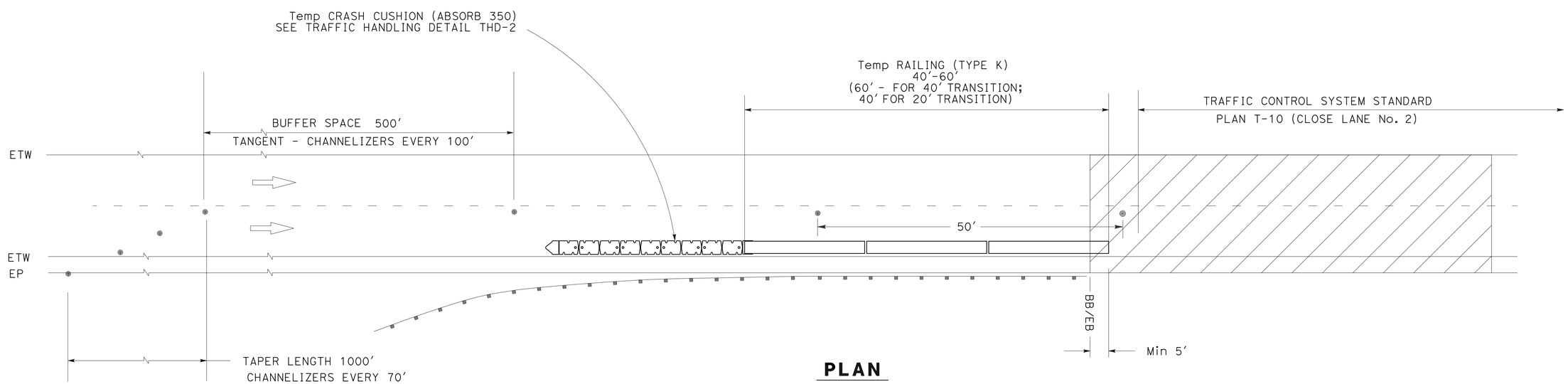


## PLAN

THIS PLAN ACCURATE FOR TRAFFIC HANDLING WORK ONLY.

# TRAFFIC HANDLING PLAN
NO SCALE

TH-1

REVISED BY | DATE REVISED
BRENDA C. HARWELL | TOM CARY
CALCULATED-DESIGNED BY | CHECKED BY
FUNCTIONAL SUPERVISOR
L.R. ASHLEY

STATE OF CALIFORNIA - DEPARTMENT OF TRANSPORTATION
Caltrans
DESIGN

\\sv01s01\PSESUBMIT\01_464001\146400md001.dgn

LAST REVISION 06-25-09 | DATE PLOTTED => 23-SEP-2009 | TIME PLOTTED => 06:48

BORDER LAST REVISED 4/11/2008 | RELATIVE BORDER SCALE IS IN INCHES 0 1 2 3 | USERNAME => trmikesl | DGN FILE => 146400md001.dgn | CU 03232 | EA 464001

| Dist | COUNTY | ROUTE | POST MILES TOTAL PROJECT | SHEET No. | TOTAL SHEETS |
|---|---|---|---|---|---|
| 01 | Hum | 101 | T0.2/R126.0 | 15 | 72 |

REGISTERED CIVIL ENGINEER 6-26-09 DATE

9-21-09
PLANS APPROVAL DATE

REGISTERED PROFESSIONAL ENGINEER
BRENDA HARWELL
No. 64471
Exp. 6/30/11
CIVIL
STATE OF CALIFORNIA

*THE STATE OF CALIFORNIA OR ITS OFFICERS OR AGENTS SHALL NOT BE RESPONSIBLE FOR THE ACCURACY OR COMPLETENESS OF SCANNED COPIES OF THIS PLAN SHEET.*

NOTES:

1. TO PROTECT NEW ANCHOR BLOCK DURING CURE TIME, RE-HANG EXISTING RAIL ELEMENT IN EXISTING BOLT HOLES.
2. USE FOR TRANSITION ANCHOR BLOCKS LESS THAN 10'
3. SEE DETAIL FOR TEMPORARY CRASH CUSHION - ABSORB 350 FOR TRANSITION ANCHOR BLOCKS LONGER THAN 10' (SEE STRUCTURE PLANS)

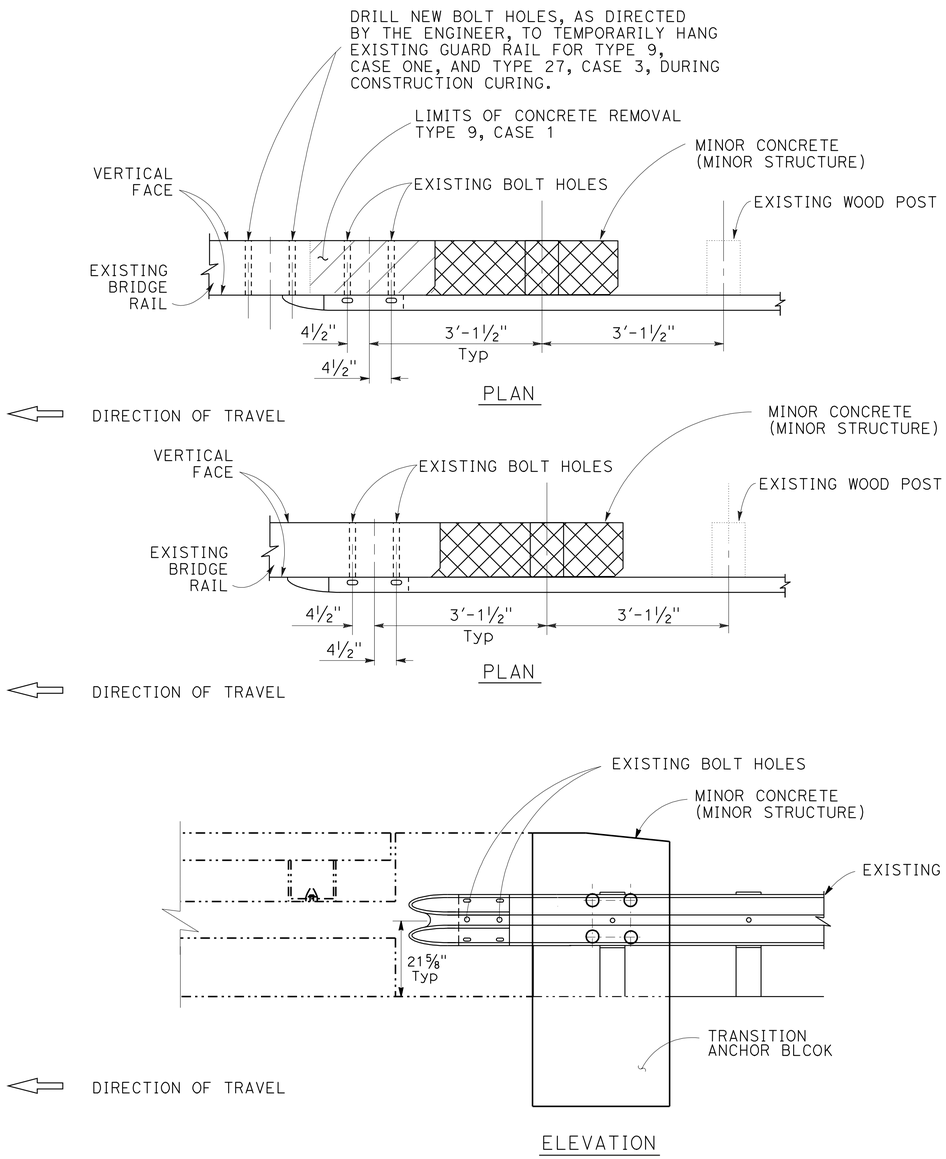


## TEMPORARY TRAFFIC PROTECTION DETAILS

THIS PLAN ACCURATE FOR TRAFFIC HANDLING WORK ONLY.

## TRANSITION ANCHOR BLOCKS LESS THAN 10'

| BRIDGE No. | STRUCTURE NAME | POST MILE | DIRECTION | |
|---|---|---|---|---|
| TYPE 1 BARRIER TRANSITION BLOCK LENGTH = 4'-0" | | | | |
| 04-006S | DEAN CREEK OFF-RAMP (RT) | 14.31 | NB | |
| 04-0190 | DIMMICK ROAD UC | 19.7 | NB | SB |
| 04-0174 | FRENCH ROAD UC | 22.4 | NB | SB |
| 04-0175 | BEAR BUTTES ROAD UC | 23.01 | NB | SB |
| 04-0123 | SOUTH FORK EEL RIVER | 27.71 | NB | SB |
| 04-0199 | BEAR CREEK | 42.99 | NB | SB |
| 04-0200 | BARKDULL ROAD UC | 43.32 | NB | SB |
| 04-0206 | GREENLAW CREEK | 45.57 | NB | SB |
| 04-0207 | JORDAN ROAD SEPARATOR | 45.90 | NB | SB |
| 04-0208L/R | JORDAN CREEK | 46.18/46.19 | 2 NB | 2 SB |
| 04-0205 | STAFFORD ROAD UC | 47.95 | NB | SB |
| 04-0014 | EEL RIVER BRIDGE & OH | 48.69 | NB | SB |
| 04-0108 | ROHNER CREEK | 60.67 | NB | SB |
| 04-0122 | ORCHARD AVENUE UC | 72.03 | NB | SB |
| 04-0067L/R | KING SALMON AVE UC | 72.80/72.88 | 2 NB | 2 SB |
| TYPE 9 BARRIER TRANSITION BLOCK - L=4'8" | | | | |
| 04-0216 | OLD US 101 UC | 7.77 | NB | SB |
| 04-0155 | SOUTH FORK EEL RIVER BRIDGE | 7.87 | NB | SB |
| 04-0212 | SOUTH FORK EEL RIVER BRIDGE | 8.30 | NB | SB |
| 04-0211 | BENBOW UC | 8.60 | NB | SB |
| 04-0039 | EAST BRANCH SO FORK EEL RIVER BR | 8.80 | NB | SB |
| TYPE 25 BARRIER TRANSITION BLOCK L=6' | | | | |
| 04-0030 | LOST MAN CREEK | 124.71 | NB | SB |
| 04-0241 | SO. FORK EEL RIVER BR (SB L&T) * | 5.63 | NB | 2 SB |
| 04-0034 | REDWOOD CREEK OVERFLOW | 120.02 | NB | SB |
| 04-0029 | PRAIRIE CREEK | 122.86 | NB | SB |
| TYPE 27 (CASE I,2&3) BARRIER TRANSITION BLOCK L=6'6" | | | | |
| 04-0113 | FINCH CREEK Rd UC | 63.1 | NB | SB |
| 04-0112 | PALMER Blvd UC | 63.23 | NB | SB |
| 04-0028 | REDWOOD CREEK BR | 121.09 | NB | SB |
| 04-0071 | SPRUCE POINT OC | 73.7 | NB | SB |
| 04-0130 | 12th St OC | 60.49 | NB | SB |

## TRAFFIC HANDLING DETAILS

NO SCALE

THD-1

REVISED BY | DATE REVISED
BRENDA C. HARWELL | TOM CARY
CALCULATED-DESIGNED BY | CHECKED BY
FUNCTIONAL SUPERVISOR: L.R. ASHLEY
STATE OF CALIFORNIA - DEPARTMENT OF TRANSPORTATION
Caltrans
DESIGN

\\sv01s01\PSESUBMIT\01_464001\146400me001.dgn

LAST REVISION 06-25-09 | DATE PLOTTED => 23-SEP-2009 | TIME PLOTTED => 06:48

BORDER LAST REVISED 4/11/2008 | RELATIVE BORDER SCALE IS IN INCHES 0 1 2 3 | USERNAME => trmikesl | DGN FILE => 146400me001.dgn | CU 03232 | EA 464001

| Dist | COUNTY | ROUTE | POST MILES TOTAL PROJECT | SHEET No. | TOTAL SHEETS |
|---|---|---|---|---|---|
| 01 | Hum | 101 | T0.2/R126.0 | 16 | 72 |

REGISTERED CIVIL ENGINEER 6-26-09 DATE

9-21-09
PLANS APPROVAL DATE

REGISTERED PROFESSIONAL ENGINEER BRENDA HARWELL No. 64471 Exp. 6/30/11 CIVIL STATE OF CALIFORNIA

*THE STATE OF CALIFORNIA OR ITS OFFICERS OR AGENTS SHALL NOT BE RESPONSIBLE FOR THE ACCURACY OR COMPLETENESS OF SCANNED COPIES OF THIS PLAN SHEET.*

NOTE:

FOR DETAILS NOT SHOWN, REFER TO MANUFACTURER'S INSTALLATION MANUAL.

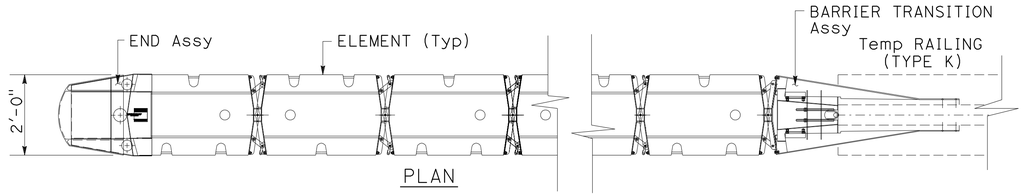


PLAN

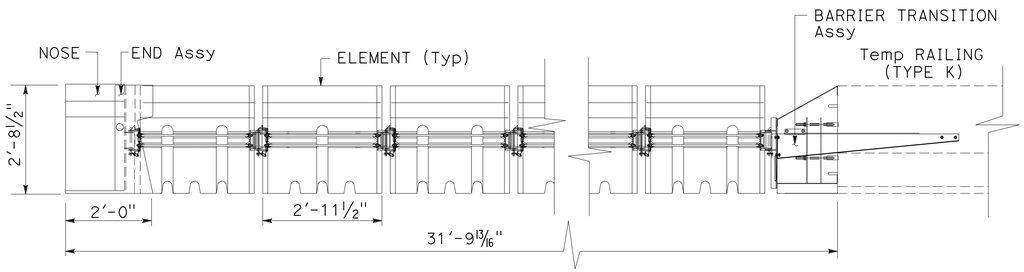


ELEVATION

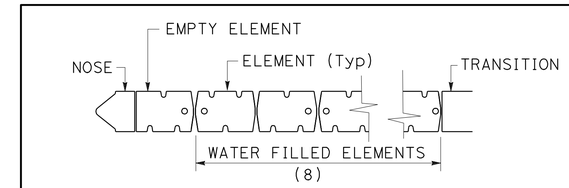


ABSORB 350 SYSTEM CONFIGURATION (TL3) 65 MPH

NOTES:

1. SHIM WITH TWO ⅝" WASHERS AT EACH BOLT AS NECESSARY. TYPE A - W.
2. REMOVE CONCRETE IN THIS AREA TO FIT PIN HINGE PLATE ADAPTER, AS NECESSARY.

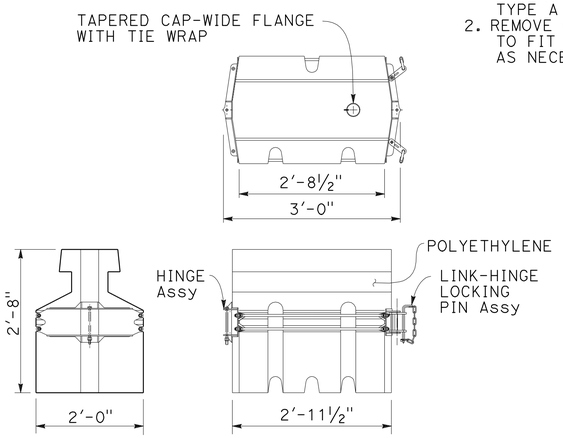


ELEMENT

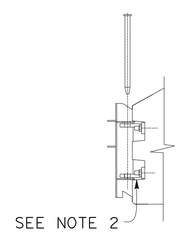


HINGE PIN DETAIL

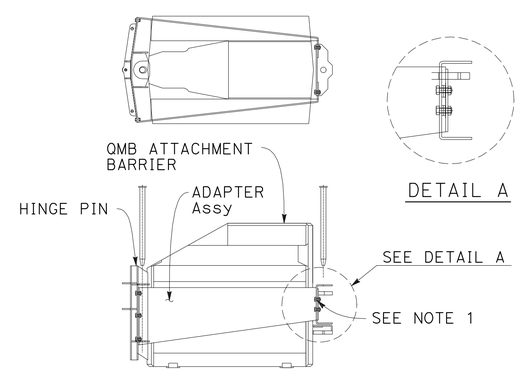


DETAIL A

BARRIER TRANSITION ASSEMBLY

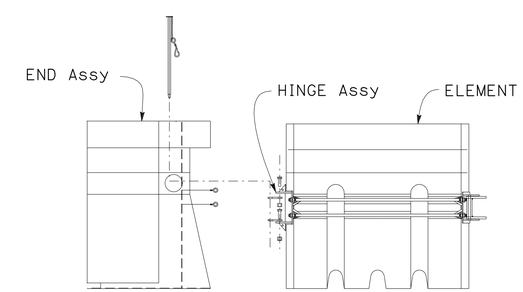


END ASSEMBLY

**ABSORB 350**

TEMPORARY CRASH CUSHION

## TEMPORARY TRAFFIC PROTECTION DETAILS

USE FOR TRANSITION ANCHOR BLOCKS GREATER THAN 10'
SEE STRUCTURE PLANS

THIS PLAN ACCURATE FOR TRAFFIC HANDLING WORK ONLY.

## TRAFFIC HANDLING DETAILS

NO SCALE

**THD-2**

REVISED BY | DATE REVISED
BRENDA C. HARWELL | TOM CARY
CALCULATED-DESIGNED BY | CHECKED BY
FUNCTIONAL SUPERVISOR | L.R. ASHLEY

STATE OF CALIFORNIA - DEPARTMENT OF TRANSPORTATION
Caltrans®
DESIGN

\\sv01s01\PSESUBMIT\01_464001\146400me002.dgn

LAST REVISION 06-25-09 | DATE PLOTTED => 23-SEP-2009 | TIME PLOTTED => 06:48

BORDER LAST REVISED 4/11/2008 | RELATIVE BORDER SCALE IS IN INCHES 0 1 2 3 | USERNAME => trmikesl | DGN FILE => 146400me002.dgn | CU 03232 | EA 464001

| Dist | COUNTY | ROUTE | POST MILES TOTAL PROJECT | SHEET No. | TOTAL SHEETS |
|---|---|---|---|---|---|
| 01 | Hum | 101 | T0.2/R126.0 | 17 | 72 |

REGISTERED CIVIL ENGINEER 6-26-09 DATE

9-21-09
PLANS APPROVAL DATE

REGISTERED PROFESSIONAL ENGINEER BRENDA HARWELL No. 64471 Exp. 6/30/11 CIVIL STATE OF CALIFORNIA

*THE STATE OF CALIFORNIA OR ITS OFFICERS OR AGENTS SHALL NOT BE RESPONSIBLE FOR THE ACCURACY OR COMPLETENESS OF SCANNED COPIES OF THIS PLAN SHEET.*

LEGEND:

ATS - ATTACHED TO STRUCTURE
TA - TYPE A BREAKAWAY TERMINAL
TB - TYPE B BREAKAWAY TERMINAL
MELT - MODIFIED ECCENTRIC LOADER TERMINAL
ET - TERMINAL SYSTEM (TYPE ET)
SRT - TERMINAL SYSTEM (TYPE SRT)
BPA - BURIED POST ANCHOR
CAA - CABLE ANCHOR ASSEMBLY
TBC - THRIE BEAM CONNECTION TO STRUCTURE
AIL - ALTERNATIVE IN-LINE TERMINAL SYSTEM
AF - ALTERNATIVE FLARED TERMINAL SYSTEM
WB - TRANSITION RAILING (TYPE WB)
NC - NO CHANGE
OSD - OVERSIDE DRAIN
ESA - ENVIRONMENTALLY SENSITIVE AREA
CRZ - CLEAR RECOVERY ZONE
NON-STD - NON-STANDARD

(N): NOT A SEPARATE PAY ITEM, FOR INFORMATION ONLY.

# METAL BEAM GUARD RAILING

| LOCATION / DESCRIPTION | | | | | | | | | | | | | | | | | | | | | | | | | | | | |
|---|---|---|---|---|---|---|---|---|---|---|---|---|---|---|---|---|---|---|---|---|---|---|---|---|---|---|---|---|
| Loc | POST MILE | | DIRECTION | EXISTING LENGTH | EXISTING LEADER | EXISTING TRAILER | PROPOSED LEADER | PROPOSED TRAILER | REMOVE MBGR | MBGR (WOOD POST) | ADJUST MBGR ELEMENT | RECONSTRUCT MBGR (WOOD POST) | RECONSTRUCT MBGR (7' POST) | MBGR (8' WOOD POST) | MBGR (ELEMENT) | TRANSITION RAILING (TYPE WB) | BURIED POST ANCHOR (N) | TERMINAL SYSTEMS: ALTERNATIVE FLARED TERMINAL SYSTEM | TERMINAL SYSTEMS: ALTERNATIVE IN-LINE TERMINAL SYSTEM | TERMINAL SYSTEMS: TERMINAL ANCHOR Assy (TYPE SFT) | TERMINAL SYSTEMS: TERMINAL SYSTEM (TYPE CAT) | TERMINAL SYSTEMS: RELOCATE TERMINAL SYSTEM | DOUBLE MBGR (WOOD POST) | RAIL TENSIONING (Assy) | STRUCTURE NAME (SEE STRUCTURE PLANS) | COMMENTS | Loc |
| | FROM | TO | | LF | | | | | LF | LF | LF | LF | LF | EA | EA | EA | EA | EA | EA | EA | EA | EA | LF | EA | | | |
| 1 | 0.18 | 0.31 | NB | 700 | SRT | ET2000 | NC | AIL | | | 412.5 | | 200 | | 3 | | | | 1 | | | | | | | DAMAGED ET2000; ESA FENCING MBGR AS LOW AS 25"; Rdwy Exc | 1 |
| 2 | 0.31 | 0.36 | SB | 162.5 | SRT | SRT | NC | NC | | | 87.5 | | | | | | | | | | | | | | | MBGR AS LOW AS 24" PRE-BEND ELEMENT | 2 |
| 3 | 5.18 | 5.22 | NB | 262.5 | SRT | N/A | NC | N/A | | | 225 | | | | 6 | | | | | | | | | | | PRE-BEND ELEMENT MBGR & WEED MAT TO Co Rd | 3 |
| 4 | 5.47 | 5.54 | NB | 375 | SRT | SRT | NC | NC | | | 300 | | | | | | | | | | | 1 | | | | MBGR AS LOW AS 23"; RELOCATE SRT - LEADING END (GATING) | 4 |
| 5 | 5.61 | 5.63 | NB | 125 | SRT | ATS | NC | TBC | 25 | | 56 | | | | | 1 | | | | | | | | | S FORK EEL RIVER Br #04-0241 | Conc BLOCK = 6'-6" MBGR AS LOW AS 25" | 5 |
| 6 | 5.61 | 5.63 | SB | 137.5 | ATS | SRT | TBC | NC | 25 | | 68.5 | | | | | 1 | | | | | | | | | S FORK EEL RIVER Br #04-0241 | MBGR AS LOW AS 25" Conc BLOCK 6'-6"; SB TRAILING - ADD WB | 6 |
| 7 | 5.90 | 5.92 | NB | 75 | ATS | BPA | NC | NC | | | 75 | | | | | | 1 | | | | | | | | S FORK EEL RIVER Br #04-0241 | MBGR AS LOW AS 25" REMOVE EARTH UNDER MBGR | 7 |
| 8 | 5.90 | 5.97 | SB | 375 | SRT | ATS | AF | TBC | 25 | | 306 | | | | | 1 | | 1 | | | | | | | S FORK EEL RIVER Br #04-0241 | Conc BLOCK = 6'-6"; DAMAGED SRT; MBGR AS LOW AS 26" | 8 |
| 9 | 6.92 | 6.96 | NB | 250 | MELT | MELT | AF | SFT | 37.5 | | | 212.5 | | | | | | 1 | | 1 | | | | | | | 9 |
| 10 | 7.75 | 7.77 | SB | 62.5 | ATS | BPA | NC | NC | 62.5 | 62.5 | | | | | | | 1 | | | | | | | | OLD US 101 UC #04-216 | TYPE 9 Br RAIL | 10 |
| 11 | 7.75 | 7.76 | NB | 100 | BPA | ATS | NC | TBC | 25 | | | 70 | | | | 1 | 1 | | | | | | | | OLD US 101 UC #04-216 | Conc BLOCK = 4'-8" | 11 |
| 12 | 7.80 | 7.85 | SB | 275 | ATS | ATS | TBC | NC | 60 | | 215 | | | | | 1 | | | | | | | | | S FORK EEL RIVER #04-155 | FROM US 101 UC; Conc BLOCK= 4'-8" | 12 |
| 13 | 7.80 | 7.85 | NB | 213 | ATS | ATS | NC | TBC | 25 | | 183 | | | | | 1 | | | | | | | | | S FORK EEL RIVER #04-155 | FROM US 101 UC; PROPOSED TRAILER IS LEADING END OF Br | 13 |
| 14 | 8.00 | 8.02 | SB | 87.5 | ATS | ATS | NC | TBC | 25 | | 57.5 | | | | | 1 | | | | | | | | | S FORK EEL RIVER #04-155 | MBGR AS LOW AS 24"; Conc BURIED RAIL SB LEADING END | 14 |
| 15 | 8.12 | 8.30 | NB | 950 | BPA | ATS | NC | TBC | 25 | | | 920 | | | 10 | 1 | 1 | | | | | | | | S FORK EEL RIVER #04-212 | LARGE TURNOUT Conc BLOCK = 4'-8" | 15 |
| 16 | 8.42 | 8.43 | SB | 75 | ET2000 | ATS | NC | TBC | 25 | | | | | | | 1 | | | | | | 1 | | | S FORK EEL RIVER #04-212 | MBGR AS LOW AS 25"; POSTS IN AC; Conc BLOCK = 4'-8" | 16 |
| 17 | 8.42 | 8.49 | NB | 320 | ATS | SFT | NC | NC | | | 320 | | | | | | | | | | | | | | S FORK EEL RIVER #04-212 | OFF RAMP TO BENBOW MBGR AS LOW AS 26" | 17 |
| 18 | 8.59 | 8.60 | NB | 75 | ET2000 | ATS | NC | TBC | 25 | | | | | | | 1 | | | | | | 1 | | | BENBOW UC #04-211 | MBGR AS LOW AS 25" Conc BLOCK = 4'-8" | 18 |
| 19 | 8.60 | 8.60 | SB | 75 | ET2000 | ATS | NC | TBC | 25 | | | | | | | 1 | | | | | | 1 | | | BENBOW UC #04-211 | MBGR AS LOW AS 25" Conc BLOCK = 4'-8" | 19 |
| 20 | 8.60 | 8.60 | SB | 437.5 | ATS | TA | TBC | SFT | 25 | | 395.3 | | 12.5 | | 5 | 1 | | | | 1 | | | | | E BRANCH S FORK EEL #04-439 | OFF-RAMP; SB TRAILING - WB MBGR AS LOW AS 25" | 20 |
| 21 | 8.79 | 8.80 | NB | 75 | ET2000 | ATS | NC | TBC | 25 | | | | | | | 1 | | | | | | 1 | | | E BRANCH S FORK EEL #04-439 | Conc BLOCK = 4'-8" | 21 |
| 22 | 10.15 | 10.19 | SB | 537.5 | MELT | BPA | AF | NC | 37.5 | | | 500 | | | 5 | | 1 | 1 | | | | | | | TOOBY UC Br 04-0255 | BURIED POSTS IN BERM | 22 |
| 23 | 10.15 | 10.19 | NB | 162.5 | BPA | TB | NC | SFT | | | | 162.5 | | | 2 | | 1 | | | 1 | | | | | TOOBY UC Br 04-0255 | | 23 |
| SUBTOTAL SHEET Q-1 | | | | | | | | | 497.5 | 62.5 | 2701.3 | 1865.0 | 212.5 | | 31 | 13 | 6 | 3 | 1 | 3 | | 5 | | | | | |

# SUMMARY OF QUANTITIES
## Q-1

REVISED BY | DATE REVISED
BRENDA C. HARWELL | JUAN SALAS
CALCULATED-DESIGNED BY | CHECKED BY
FUNCTIONAL SUPERVISOR: L.R. ASHLEY

STATE OF CALIFORNIA - DEPARTMENT OF TRANSPORTATION
Caltrans
DESIGN

\\sv01s01\PSESUBMITV01_464001\146400pa001.dgn

LAST REVISION 06-25-09 | DATE PLOTTED => 23-SEP-2009 | TIME PLOTTED => 06:49

| Dist | COUNTY | ROUTE | POST MILES TOTAL PROJECT | SHEET No. | TOTAL SHEETS |
|---|---|---|---|---|---|
| 01 | Hum | 101 | T0.2/R126.0 | 18 | 72 |

REGISTERED CIVIL ENGINEER 6-26-09 DATE

9-21-09
PLANS APPROVAL DATE

REGISTERED PROFESSIONAL ENGINEER BRENDA HARWELL No. 64471 Exp. 6/30/11 CIVIL STATE OF CALIFORNIA

*THE STATE OF CALIFORNIA OR ITS OFFICERS OR AGENTS SHALL NOT BE RESPONSIBLE FOR THE ACCURACY OR COMPLETENESS OF SCANNED COPIES OF THIS PLAN SHEET.*

# METAL BEAM GUARD RAILING

| LOCATION / DESCRIPTION | | | | | | | | | | | | | | | | | | | | | | | | | | | | |
|---|---|---|---|---|---|---|---|---|---|---|---|---|---|---|---|---|---|---|---|---|---|---|---|---|---|---|---|---|
| Loc | POST MILE | | DIRECTION | EXISTING LENGTH | EXISTING LEADER | EXISTING TRAILER | PROPOSED LEADER | PROPOSED TRAILER | REMOVE MBGR | MBGR (WOOD POST) | ADJUST MBGR ELEMENT | RECONSTRUCT MBGR (WOOD POST) | RECONSTRUCT MBGR (7' POST) | MBGR (8' WOOD POST) | MBGR (ELEMENT) | TRANSITION RAILING (TYPE WB) | BURIED POST ANCHOR (N) | TERMINAL SYSTEMS: ALTERNATIVE FLARED TERMINAL SYSTEM | TERMINAL SYSTEMS: ALTERNATIVE IN-LINE TERMINAL SYSTEM | TERMINAL SYSTEMS: TERMINAL ANCHOR Assy (TYPE SFT) | TERMINAL SYSTEMS: TERMINAL SYSTEM (TYPE CAT) | TERMINAL SYSTEMS: RELOCATE TERMINAL SYSTEM | DOUBLE MBGR (WOOD POST) | RAIL TENSIONING (Assy) | STRUCTURE NAME (SEE STRUCTURE PLANS) | COMMENTS | Loc |
| | FROM | TO | | LF | | | | | LF | LF | LF | LF | LF | EA | EA | EA | EA | EA | EA | EA | EA | EA | LF | EA | | | |
| 24 | 10.52 | 10.61 | NB | 475 | BPA | TB | NC | SFT | | | | 475 | | | 5 | | 1 | | | 1 | | | | | | | 24 |
| 25 | 10.54 | 10.64 | SB | 525 | TA | MELT | AF | SFT | 37.5 | | | 487.5 | | | | | | 1 | | 1 | | | | | | TWO BURNED POSTS 25' POSTS ARE IN AC | 25 |
| 26 | 10.77 | 10.80 | SB | 150 | MELT | BPA | AIL | NC | 50 | | | 100 | | | | | 1 | | 1 | | | | | | | | 26 |
| 27 | 10.86 | 10.88 | SB | 88 | BPA | MELT | NC | SFT | 37.5 | | | 62.5 | 25 | | | | 1 | | | 1 | | | | | | | 27 |
| 28 | 11.11 | 11.13 | Med | 100 | CAA | N/A | CAT | SFT | 100 | 37.5 | | | | | | | | | | 1 | 1 | | 25 | 1 | SPROWL CREEK Rd OC | BARREL ARRAYS IN MEDIAN | 28 |
| 29 | 11.11 | 11.13 | Med | 100 | CAA | N/A | CAT | SFT | 100 | 37.5 | | | | | | | | | | 1 | 1 | | 25 | 1 | SPROWL CREEK Rd OC | BARREL ARRAYS IN MEDIAN | 29 |
| 30 | 11.25 | 11.27 | NB | 87.5 | BPA | TB | NC | SFT | | | | 87.5 | | | | | 1 | | | 1 | | | | | | | 30 |
| 31 | 11.29 | 11.35 | SB | 300 | BPA | TB | NC | SFT | | | | 300 | | | | | 1 | | | 1 | | | | | | OFF-RAMP | 31 |
| 32 | 11.35 | 11.37 | NB | 87.5 | BPA | TB | NC | SFT | | | | 75 | | 12.5 | | | 1 | | | 1 | | | | | OFF-RAMP PROTECTING OH SIGN | STRENGTHENED SYSTEM (10"X10"X8' POST) BURIED DIKE | 32 |
| 33 | 11.40 | 11.51 | SB | 250 | TA | TB | BPA | SFT | | 12.5 | | 250 | | | | | 1 | | | 1 | | | | | | NEW BPA | 33 |
| 34 | 11.49 | 11.51 | Med | 100 | CAA | N/A | CAT | SFT | 100 | 37.5 | | | | | | | | | | 1 | 1 | | 25 | 1 | REDWOOD Dr OC | BARREL ARRAYS IN MEDIAN | 34 |
| 35 | 11.49 | 11.51 | Med | 100 | CAA | N/A | CAT | SFT | 100 | 37.5 | | | | | | | | | | 1 | 1 | | 25 | 1 | REDWOOD Dr OC | BARREL ARRAYS IN MEDIAN | 35 |
| 36 | 11.52 | 11.58 | NB | 300 | SRT | NON-STD | NC | SFT | | | | 262.5 | | | | | | | | 1 | | | | | REDWOOD Dr OC | ON-RAMP - L† | 36 |
| 37 | 11.60 | 11.74 | NB | 825 | BPA | BPA | NC | NC | | | | 825 | | | | | 2 | | | | | | | | REDWOOD Dr OC | ON-RAMP - R† | 37 |
| 38 | 11.62 | 11.74 | SB | 625 | BPA | TB | NC | SFT | | | | 625 | | | | | 1 | | | 1 | | | | | | | 38 |
| 39 | 11.79 | 11.90 | SB | 575 | SRT | BPA | NC | NC | | | 537.5 | | | | 10 | | 1 | | | | | | | | ALDERPOINT Rd OC | | 39 |
| 40 | 11.86 | 11.91 | NB | 325 | BPA | BPA | NC | NC | | | | 325 | | | | | 2 | | | | | | | | | | 40 |
| 41 | 12.03 | 12.21 | SB | 912.5 | BPA | BPA | NC | NC | | | | 287.5 | 625 | | 10 | | 2 | | | | | | | | | | 41 |
| 42 | 12.06 | 12.20 | NB | 725 | BPA | TA | NC | SFT | | | | 725 | | | | | 1 | | | 1 | | | | | | | 42 |
| 43 | 12.26 | 12.30 | NB | 225 | BPA | BPA | NC | NC | | | | 225 | | | | | 2 | | | | | | | | | | 43 |
| 44 | 12.26 | 12.31 | SB | 300 | TA | BPA | AF | NC | 37.5 | | | 262.5 | | | | | 1 | 1 | | | | | | | | RESET BPA TO PROPER HEIGHT | 44 |
| 45 | 12.48 | 12.87 | NB | 2075 | TA | BPA | AF | NC | 37.5 | | | 2037.5 | | | 10 | | 1 | 1 | | | | | | | | | 45 |
| 46 | 12.49 | 12.82 | SB | 1912.5 | BPA | TB | NC | SFT | | | | 1450 | 462.5 | | | | | | | 1 | | | | | | | 46 |
| SUBTOTAL SHEET Q-2 | | | | | | | | | 600.0 | 162.5 | 537.5 | 8862.5 | 1112.5 | 12.5 | 35 | | 20 | 3 | 1 | 15 | 4 | | 100 | 4 | | | |

## SUMMARY OF QUANTITIES

Q-2

REVISED BY | DATE REVISED
BRENDA C. HARWELL | JUAN SALAS
CALCULATED-DESIGNED BY | CHECKED BY
FUNCTIONAL SUPERVISOR: L.R. ASHLEY

STATE OF CALIFORNIA - DEPARTMENT OF TRANSPORTATION
Caltrans® DESIGN

\\sv01s01\PSESUBMIT\01_464001\146400pa002.dgn

LAST REVISION 06-25-09 | DATE PLOTTED => 23-SEP-2009 | TIME PLOTTED => 06:49

| Dist | COUNTY | ROUTE | POST MILES TOTAL PROJECT | SHEET No. | TOTAL SHEETS |
|---|---|---|---|---|---|
| 01 | Hum | 101 | T0.2/R126.0 | 19 | 72 |

REGISTERED CIVIL ENGINEER 6-26-09 DATE

9-21-09
PLANS APPROVAL DATE

REGISTERED PROFESSIONAL ENGINEER BRENDA HARWELL No. 64471 Exp. 6/30/11 CIVIL STATE OF CALIFORNIA

*THE STATE OF CALIFORNIA OR ITS OFFICERS OR AGENTS SHALL NOT BE RESPONSIBLE FOR THE ACCURACY OR COMPLETENESS OF SCANNED COPIES OF THIS PLAN SHEET.*

# METAL BEAM GUARD RAILING

| LOCATION / DESCRIPTION | | | | | | | | | | | | | | | | | | | | | | | | | | | | |
|---|---|---|---|---|---|---|---|---|---|---|---|---|---|---|---|---|---|---|---|---|---|---|---|---|---|---|---|---|
| Loc | POST MILE | | DIRECTION | EXISTING LENGTH | EXISTING LEADER | EXISTING TRAILER | PROPOSED LEADER | PROPOSED TRAILER | REMOVE MBGR | MBGR (WOOD POST) | ADJUST MBGR ELEMENT | RECONSTRUCT MBGR (WOOD POST) | RECONSTRUCT MBGR (7' POST) | MBGR (8' WOOD POST) | MBGR (ELEMENT) | TRANSITION RAILING (TYPE WB) | BURIED POST ANCHOR (N) | TERMINAL SYSTEMS: ALTERNATIVE FLARED TERMINAL SYSTEM | TERMINAL SYSTEMS: ALTERNATIVE IN-LINE TERMINAL SYSTEM | TERMINAL SYSTEMS: TERMINAL ANCHOR Assy (TYPE SFT) | TERMINAL SYSTEMS: TERMINAL SYSTEM (TYPE CAT) | TERMINAL SYSTEMS: RELOCATE TERMINAL SYSTEM | DOUBLE MBGR (WOOD POST) | RAIL TENSIONING (Assy) | STRUCTURE NAME (SEE STRUCTURE PLANS) | COMMENTS | Loc |
| | FROM | TO | | LF | | | | | LF | LF | LF | LF | LF | EA | EA | EA | EA | EA | EA | EA | EA | EA | LF | EA | | | |
| 47 | 12.90 | 12.97 | NB | 363 | BPA | BPA | NC | NC | | | | | | | | | 2 | | | | | | | | | | 47 |
| 48 | 12.90 | 13.15 | SB | 1100 | BPA | BPA | NC | NC | | | | | | | | | 2 | | | | | | | | | | 48 |
| 49 | 12.99 | 13.17 | NB | 900 | BPA | TB | NC | SFT | | | | 100 | | | | | 1 | | | 1 | | | | | | | 49 |
| 50 | 13.31 | 13.53 | NB | 1200 | BPA | TB | NC | SFT | | | | 25 | | | 6 | | 1 | | | 1 | | | | | | | 50 |
| 51 | 13.48 | 13.53 | SB | 300 | BPA | TB | NC | SFT | | | | 25 | | | | | 1 | | | 1 | | | | | | | 51 |
| 52 | 13.61 | 13.65 | NB | 187.5 | TA | BPA | AF | NC | 37.5 | | | | | | | | 1 | 1 | | | | | | | | | 52 |
| 53 | 13.62 | 13.65 | SB | 125 | TA | TB | AF | SFT | 37.5 | | | 25 | | | | | | 1 | | 1 | | | | | | | 53 |
| 54 | 13.68 | 13.97 | NB | 1450 | BPA | BPA | NC | NC | | | | | | | 6 | | 2 | | | | | | | | | | 54 |
| 55 | 13.71 | 13.75 | SB | 250 | TA | TB | AF | SFT | 37.5 | | | 25 | | | | | | 1 | | 1 | | | | | | | 55 |
| 56 | 13.80 | 13.83 | SB | 137.5 | TA | TB | AF | SFT | 37.5 | | | 25 | | | 4 | | | 1 | | 1 | | | | | | | 56 |
| 57 | 13.88 | 13.91 | SB | 187.5 | BPA | TB | NC | SFT | | | | 25 | | | | | 1 | | | 1 | | | | | | | 57 |
| 58 | 14.06 | 14.31 | SB | 1325 | ATS | TB | NC | SFT | | | | 25 | | | 6 | | | | | 1 | | | | DEAN CREEK #04-0006 | | 58 |
| 59 | 14.08 | 14.38 | NB | 1100 | BPA | ATS | NC | TBC | 25 | | | 100 | | | 1 | 1 | 1 | | | | | | | OFF-RAMP TO DEAN CREEK #04-0006S | OFF-RAMP R† Conc BLOCK = 4' | 59 |
| 60 | 14.09 | 14.31 | NB | 1225 | TA | ATS | AF | TBC | 62.5 | | | 100 | | | 7 | 1 | | 1 | | | | | | DEAN CREEK #04-0006 | Conc BLOCK = 40' | 60 |
| 61 | 14.30 | 14.31 | NB | 50 | BPA | ATS | NC | TBC | 30 | | | | | | | 1 | 1 | | | | | | | DEAN CREEK #04-0006S | OFF-RAMP L† Conc BLOCK = 20' | 61 |
| 62 | 14.38 | 14.44 | NB | 300 | ATS | TB | NC | SFT | | | | 25 | | | | | | | | 1 | | | | DEAN CREEK #04-0006 | | 62 |
| 63 | 14.38 | 14.46 | SB | 437.5 | CAA | ATS | AF | TBC | 62.5 | 100 | | | | | | 1 | | 1 | | | | | | DEAN CREEK #04-0006 | EXTEND MBGR 100 FEET NORTH Conc BLOCK = 40' | 63 |
| 64 | 14.38 | 15.02 | SB | 3250 | CAA | TB | AIL | SFT | 50 | 50 | | 150 | 300 | | 5 | | | | 1 | 1 | | | | DEAN CREEK #04-0006 | UNSTABLE AREA EXTEND MBGR 50 FEET NORTH | 64 |
| 65 | 15.14 | 15.67 | SB | 2800 | SRT | SFT | NC | NC | | | 2662.5 | | 100 | | 4 | | | | | | | | | DEAN CREEK #04-0006 | | 65 |
| 66 | 15.73 | 16.01 | SB | 1456 | SRT | SFT | NC | NC | | 50 | 1256.5 | | 100 | | | | | | | | | 1 | | REDWAY | RELOCATE SFT UNDERGROUND UTILITIES, SEE UTILITY PLAN; EXTEND MBGR 50' | 66 |
| 67 | 16.49 | 16.53 | NB | 213 | BPA | SFT | NC | NC | | | 213 | | | | | | 1 | | | | | | | HURLBUTT UC | STEEL PIPE ARCH CULVERT | 67 |
| 68 | 16.50 | 16.60 | SB | 225 | SRT | SFT | NC | NC | | | 162.5 | | 25 | | | | | | | | | | | HURLBUTT UC | STEEL PIPE ARCH CULVERT | 68 |
| 69 | 16.93 | 17.04 | SB | 575 | SRT | SFT | NC | NC | | | 537.5 | | | | | | | | | | | | | | UNSTABLE AREA | 69 |
| SUBTOTAL SHEET Q-3 | | | | | | | | | 380 | 200 | 4832 | 650 | 525 | | 39 | 4 | 14 | 6 | 1 | 10 | | 1 | | | | | |

## SUMMARY OF QUANTITIES
## Q-3

REVISED BY | DATE REVISED
BRENDA C. HARWELL | JUAN SALAS
CALCULATED-DESIGNED BY | CHECKED BY
FUNCTIONAL SUPERVISOR: L.R. ASHLEY

STATE OF CALIFORNIA - DEPARTMENT OF TRANSPORTATION
Caltrans® DESIGN

\\sv01s01\PSESUBMIT\01_464001\146400pa003.dgn

LAST REVISION 06-25-09 | DATE PLOTTED => 23-SEP-2009 | TIME PLOTTED => 06:49

| Dist | COUNTY | ROUTE | POST MILES TOTAL PROJECT | SHEET No. | TOTAL SHEETS |
|---|---|---|---|---|---|
| 01 | Hum | 101 | T0.2/R126.0 | 20 | 72 |

REGISTERED CIVIL ENGINEER 6-26-09 DATE

9-21-09
PLANS APPROVAL DATE

REGISTERED PROFESSIONAL ENGINEER BRENDA HARWELL No. 64471 Exp. 6/30/11 CIVIL STATE OF CALIFORNIA

*THE STATE OF CALIFORNIA OR ITS OFFICERS OR AGENTS SHALL NOT BE RESPONSIBLE FOR THE ACCURACY OR COMPLETENESS OF SCANNED COPIES OF THIS PLAN SHEET.*

# METAL BEAM GUARD RAILING

| LOCATION / DESCRIPTION | | | | | | | | | | | | | | | | | | | | | | | | | | | |
|---|---|---|---|---|---|---|---|---|---|---|---|---|---|---|---|---|---|---|---|---|---|---|---|---|---|---|---|
| Loc | POST MILE FROM | POST MILE TO | DIRECTION | EXISTING LENGTH LF | EXISTING LEADER | EXISTING TRAILER | PROPOSED LEADER | PROPOSED TRAILER | REMOVE MBGR LF | MBGR (WOOD POST) LF | ADJUST MBGR ELEMENT LF | RECONSTRUCT MBGR (WOOD POST) LF | RECONSTRUCT MBGR (7' POST) LF | MBGR (8' WOOD POST) EA | MBGR (ELEMENT) EA | TRANSITION RAILING (TYPE WB) EA | BURIED POST ANCHOR (N) EA | TERMINAL SYSTEMS: ALTERNATIVE FLARED TERMINAL SYSTEM EA | TERMINAL SYSTEMS: ALTERNATIVE IN-LINE TERMINAL SYSTEM EA | TERMINAL SYSTEMS: TERMINAL ANCHOR Assy (TYPE SFT) EA | TERMINAL SYSTEMS: TERMINAL SYSTEM (TYPE CAT) EA | TERMINAL SYSTEMS: RELOCATE TERMINAL SYSTEM EA | DOUBLE MBGR (WOOD POST) LF | RAIL TENSIONING (Assy) EA | STRUCTURE NAME (SEE STRUCTURE PLANS) | COMMENTS | Loc |
| 70 | 17.20 | 17.25 | NB | 250 | SRT | SFT | NC | NC | | | 212.5 | | | | | | | | | | | | | | | UNSTABLE AREA | 70 |
| 71 | 17.88 | 17.89 | NB | 50 | SRT | ATS | NC | TBC | 30 | | | | | | | 1 | | | | | | 1 | | | S FORK EEL RIVER B&S #04-0065 | RELOCATE SRT Conc BLOCK = 20' | 71 |
| 72 | 18.05 | 18.07 | SB | 112.5 | BPA | ATS | NC | TBC | 25 | | 67.5 | | | | | 1 | 1 | | | | | | | | S FORK EEL RIVER B&S #04-0065 | Conc BLOCK = 20' | 72 |
| 73 | 18.06 | 18.11 | NB | 250 | ATS | SFT | NC | NC | | | 125 | | 125 | | | | | | | | | | | | S FORK EEL RIVER B&S #04-0065 | UNSTABLE AREA | 73 |
| 74 | 18.24 | 18.43 | NB | 1012.5 | SRT | SFT | NC | NC | | | 975.5 | | | | 1 | | | | | | | | | | | | 74 |
| 75 | 18.33 | 18.41 | SB | 412.5 | BPA | SFT | NC | NC | | | 412.5 | | | | | | 1 | | | | | | | | | | 75 |
| 76 | 18.55 | 18.61 | NB | 300 | BPA | SFT | NC | NC | | | 300 | | | | | | 1 | | | | | | | | | | 76 |
| 77 | 18.65 | 19.39 | NB | 3800 | SRT | SFT | NC | NC | | | 3762.5 | | | | 15 | | | | | | | | | | | | 77 |
| 78 | 19.63 | 19.70 | SB | 362.5 | ATS | SFT | NC | NC | | | 362.5 | | | | | | | | | | | | | | DIMMICK Rd UC #04-0192 | | 78 |
| 79 | 19.68 | 19.70 | NB | 75 | SRT | ATS | NC | TBC | 25 | | 46 | | | | | 1 | | | | | | | | | DIMMICK Rd UC #04-0192 | Conc BLOCK = 4' | 79 |
| 80 | 19.72 | 20.47 | NB | 3962.5 | ATS | SFT | NC | NC | | | 3962.5 | | | | 28 | | | | | | | | | | DIMMICK Rd UC #04-0192 | | 80 |
| 81 | 19.72 | 19.80 | SB | 412.5 | SRT | ATS | NC | TBC | 25 | | 412.5 | | | | | 1 | | | | | | | | | DIMMICK Rd UC #04-0192 | Conc BLOCK = 4' | 81 |
| 82 | 20.10 | 20.14 | SB | 200 | SRT | SFT | NC | NC | | | 162.5 | | | | | | | | | | | | | | | | 82 |
| 83 | 21.81 | 21.85 | SB | 200 | SRT | BPA | NC | NC | | | 162.5 | | | | | | 1 | | | | | | | | | | 83 |
| 84 | 22.39 | 22.44 | SB | 250 | ATS | SFT | NC | NC | | | 212.5 | | | | 1 | | | | | | | | | | FRENCH Rd UC #01-0174 | | 84 |
| 85 | 22.40 | 22.40 | NB | 150 | SRT | ATS | NC | TBC | 25 | | 83.5 | | | | | 1 | | | | | | | | | FRENCH Rd UC #01-0174 | LEAVE SRT, REMOVE 25' OF MBGR, Conc BLOCK = 4' | 85 |
| 86 | 22.45 | 22.47 | NB | 137.5 | N/A | N/A | AF | SFT | 37.5 | | 100 | | | | | | | 1 | | 1 | | | | | | OFF-RAMP | 86 |
| 87 | 22.45 | 22.47 | SB | 100 | ET2000 | ATS | NC | TBC | 25 | | | 21 | | | | 1 | | | | | | | | | FRENCH Rd UC #01-0174 | Conc BLOCK = 4' | 87 |
| 88 | 22.45 | 22.47 | NB | 187.5 | ATS | TA | NC | SFT | | | | 187.5 | | | 6 | | | | | 1 | | | | | FRENCH Rd UC #01-0174 | | 88 |
| 89 | 22.76 | 22.85 | SB | 462.5 | BPA | BPA | NC | NC | | | | 462.5 | | | 3 | | 2 | | | | | | | | | | 89 |
| 90 | 23.00 | 23.01 | NB | 50 | BPA | ATS | NC | TBC | 25 | | | 21 | | | 1 | 1 | 1 | | | | | | | | BEAR BUTTES Rd UC #04-0175 | Conc BLOCK = 4' | 90 |
| 91 | 23.00 | 23.02 | SB | 112.5 | ATS | TB | NC | SFT | | | | 112.5 | | | | | | | | 1 | | | | | BEAR BUTTES Rd UC #04-0175 | | 91 |
| 92 | 23.03 | 23.04 | NB | 62.5 | ATS | TB | NC | SFT | | | | 62.5 | | | 3 | | | | | 1 | | | | | BEAR BUTTES Rd UC #04-0175 | | 92 |
| SUBTOTAL SHEET Q-4 | | | | | | | | | 217.5 | | 11,360 | 867 | 125 | | 58 | 7 | 7 | 1 | | 4 | | 1 | | | | | |

## SUMMARY OF QUANTITIES
## Q-4

REVISED BY | DATE REVISED
BRENDA C. HARWELL | JUAN SALAS
CALCULATED-DESIGNED BY | CHECKED BY
FUNCTIONAL SUPERVISOR: L.R. ASHLEY

STATE OF CALIFORNIA - DEPARTMENT OF TRANSPORTATION
Caltrans®
DESIGN

\\sv01s01\PSESUBMITV01_464001\146400pa004.dgn

LAST REVISION 06-25-09 | DATE PLOTTED => 23-SEP-2009 | TIME PLOTTED => 06:49

| Dist | COUNTY | ROUTE | POST MILES TOTAL PROJECT | SHEET No. | TOTAL SHEETS |
|---|---|---|---|---|---|
| 01 | Hum | 101 | T0.2/R126.0 | 21 | 72 |

REGISTERED CIVIL ENGINEER 6-26-09 DATE

9-21-09
PLANS APPROVAL DATE

REGISTERED PROFESSIONAL ENGINEER BRENDA HARWELL No. 64471 Exp. 6/30/11 CIVIL STATE OF CALIFORNIA

THE STATE OF CALIFORNIA OR ITS OFFICERS OR AGENTS SHALL NOT BE RESPONSIBLE FOR THE ACCURACY OR COMPLETENESS OF SCANNED COPIES OF THIS PLAN SHEET.

# METAL BEAM GUARD RAILING

| LOCATION / DESCRIPTION | | | | | | | | | | | | | | | | | | | | | | | | | | | | |
|---|---|---|---|---|---|---|---|---|---|---|---|---|---|---|---|---|---|---|---|---|---|---|---|---|---|---|---|---|
| Loc | POST MILE FROM | POST MILE TO | DIRECTION | EXISTING LENGTH | EXISTING LEADER | EXISTING TRAILER | PROPOSED LEADER | PROPOSED TRAILER | REMOVE MBGR | MBGR (WOOD POST) | ADJUST MBGR ELEMENT | RECONSTRUCT MBGR (WOOD POST) | RECONSTRUCT MBGR (7' POST) | MBGR (8' WOOD POST) | MBGR (ELEMENT) | TRANSITION RAILING (TYPE WB) | BURIED POST ANCHOR (N) | TERMINAL SYSTEMS: ALTERNATIVE FLARED TERMINAL SYSTEM | TERMINAL SYSTEMS: ALTERNATIVE IN-LINE TERMINAL SYSTEM | TERMINAL SYSTEMS: TERMINAL ANCHOR Assy (TYPE SFT) | TERMINAL SYSTEMS: TERMINAL SYSTEM (TYPE CAT) | TERMINAL SYSTEMS: RELOCATE TERMINAL SYSTEM | DOUBLE MBGR (WOOD POST) | RAIL TENSIONING (Assy) | STRUCTURE NAME (SEE STRUCTURE PLANS) | COMMENTS | Loc |
| | | | | LF | | | | | LF | LF | LF | LF | LF | EA | EA | EA | EA | EA | EA | EA | EA | EA | LF | EA | | | |
| 93 | 23.04 | 23.06 | SB | 125 | TA | ATS | AF | TBC | 62.5 | | | 58.5 | | | | 1 | | 1 | | | | | | | BEAR BUTTES Rd UC #04-0175 | Conc BLOCK = 4' | 93 |
| 94 | 23.49 | 23.89 | NB | 2113.5 | TA | ATS | AF | TBC | 62.5 | | | 2030 | | | 30 | 1 | | 1 | | | | | | | SALMON CREEK #01-0176 | Conc BLOCK = 20' | 94 |
| 95 | 23.5 | 23.81 | SB | 1375 | BPA | BPA | NC | NC | | | | 1375 | | | 5 | | | | | | | | | | | | 95 |
| 96 | 23.87 | 23.89 | SB | 112.5 | ATS | BPA | NC | NC | | | | 112.5 | | | | | 1 | | | | | | | | SALMON CREEK #01-0176 | | 96 |
| 97 | 23.94 | 24.84 | NB | 4750 | ATS | TB | NC | SFT | | | | 4750 | | | 20 | | | | | 1 | | | | | SALMON CREEK #01-0176 | | 97 |
| 98 | 23.94 | 23.98 | SB | 200 | TA | ATS | AF | TBC | 62.5 | | | 117.5 | | | | 1 | | 1 | | | | | | | SALMON CREEK #01-0176 | Conc BLOCK = 20' | 98 |
| 99 | 24.34 | 24.76 | SB | 2200 | TA | TB | AF | SFT | 37.5 | | | 2162.5 | | | | | | 1 | | 1 | | | | | | | 99 |
| 100 | 25.00 | 25.01 | NB | 87.5 | BPA | TB | NC | SFT | | | | 87.5 | | | 2 | | 1 | | | 1 | | | | | SALMON CREEK RD OC | | 100 |
| 101 | 25.00 | 25.01 | SB | 87.5 | TB | BPA | NC | SFT | | | | 87.5 | | | | | 1 | | | 1 | | | | | SALMON CREEK RD OC | | 101 |
| 102 | 25.19 | 25.62 | NB | 2300 | TA | SRT | AF | NC | 37.5 | | 625 | 1600 | | | 15 | | | 1 | | | | | | | | | 102 |
| 103 | 25.79 | 26.48 | NB | 3700 | SRT | SRT | NC | NC | | | 3625 | | | | 40 | | | | | | | | | | | | 103 |
| 104 | 27.06 | 27.07 | NB | 75 | BPA | ATS | NC | TBC | 25 | | 30 | | | | 1 | 1 | | | | | | | | | EAGLE POINT VIADUCT #04-0072 | Conc BLOCK = 20' | 104 |
| 105 | 27.08 | 27.09 | SB | 62.5 | ATS | BPA | NC | NC | | | 62.5 | | | | | | 1 | | | | | | | | EAGLE POINT VIADUCT #04-0072 | POSTS IN CONCRETE | 105 |
| 106 | 27.32 | 27.33 | SB | 50 | BPA | ATS | NC | TBC | 50 | | | | | | | 1 | 1 | | | | | | | | EAGLE POINT VIADUCT #04-0072 | RELOCATE BPA TO FIT NEW ANCHOR BLOCK Conc BLOCK = 20' | 106 |
| 107 | 27.35 | 27.61 | NB | 1400 | ATS | TB | NC | SFT | | | | 1400 | | | 5 | | | | | 1 | | | | | EAGLE POINT VIADUCT #04-0072 | | 107 |
| 108 | 27.69 | 27.72 | SB | 187.5 | ATS | BPA | NC | NC | | | | 187.5 | | | | | 1 | | | | | | | | S FORK EEL RIVER #04-123 | | 108 |
| 109 | 27.70 | 27.71 | NB | 62.5 | TA | ATS | AF | TBC | 50 | | | | | | | 1 | | 1 | | | | | | | S FORK EEL RIVER #04-123 | BRASS PLAQUE ON Br RAIL Conc BLOCK = 4' | 109 |
| 110 | 27.87 | 27.92 | NB | 225 | ATS | ATS | NC | TBC | 50 | | | 180 | | | | 1 | | | | | | | | | MYERS FLAT SEPARATION #04-0124 | FROM S FORK EEL RIVER Conc BLOCK=4' | 110 |
| 111 | 27.87 | 27.93 | SB | 300 | ATS | ATS | NC | TBC | 25 | | | 258 | | | | 1 | | | | | | | | | MYERS FLAT SEPARATION #04-0124 | FROM S FORK EEL RIVER Conc BLOCK = 40' | 111 |
| 112 | 27.94 | 27.95 | NB | 62.5 | ATS | TB | NC | SFT | | | | 62.5 | | | | | | | | 1 | | | | | MYERS FLAT SEPARATION #04-0124 | | 112 |
| 113 | 27.95 | 27.96 | SB | 50 | TA | ATS | AF | TBC | 50 | | | | | | | 1 | | 1 | | | | | | | MYERS FLAT SEPARATION #04-0124 | Conc BLOCK = 40' | 113 |
| 114 | 40.61 | 40.84 | NB | 1212.5 | BPA | NON-STD | NC | SFT | | | | 1087.5 | 125 | | 12 | | | | | 1 | | | | | | REDCREST UC | 114 |
| 115 | 40.61 | 40.74 | SB | 687.5 | MELT | BPA | AF | NC | 37.5 | | | 425 | 125 | | 4 | | 1 | 1 | | | | | | | | HAND EXCAVATE MBGR POST HOLES/CIDH POST HOLES | 115 |
| | | | | | | | | SUBTOTAL SHEET Q-5 | 550 | | 4342.5 | 15,981.5 | 250 | | 134 | 9 | 7 | 8 | | 7 | | | | | | | |

## SUMMARY OF QUANTITIES

Q-5

REVISED BY | DATE REVISED
BRENDA C. HARWELL | JUAN SALAS
CALCULATED-DESIGNED BY | CHECKED BY
FUNCTIONAL SUPERVISOR: L.R. ASHLEY

STATE OF CALIFORNIA - DEPARTMENT OF TRANSPORTATION
Caltrans DESIGN

\\sv01s01\PSESUBMIT\01_464001\146400pa005.dgn

LAST REVISION 06-25-09 | DATE PLOTTED => 23-SEP-2009 | TIME PLOTTED => 06:49

| Dist | COUNTY | ROUTE | POST MILES TOTAL PROJECT | SHEET No. | TOTAL SHEETS |
|---|---|---|---|---|---|
| 01 | Hum | 101 | T0.2/R126.0 | 22 | 72 |

REGISTERED CIVIL ENGINEER 6-26-09 DATE

9-21-09
PLANS APPROVAL DATE

REGISTERED PROFESSIONAL ENGINEER BRENDA HARWELL No. 64471 Exp. 6/30/11 CIVIL STATE OF CALIFORNIA

*THE STATE OF CALIFORNIA OR ITS OFFICERS OR AGENTS SHALL NOT BE RESPONSIBLE FOR THE ACCURACY OR COMPLETENESS OF SCANNED COPIES OF THIS PLAN SHEET.*

# METAL BEAM GUARD RAILING

| LOCATION / DESCRIPTION | | | | | | | | | | | | | | | | | | | | | | | | | | | | |
|---|---|---|---|---|---|---|---|---|---|---|---|---|---|---|---|---|---|---|---|---|---|---|---|---|---|---|---|---|
| Loc | POST MILE FROM | POST MILE TO | DIRECTION | EXISTING LENGTH LF | EXISTING LEADER | EXISTING TRAILER | PROPOSED LEADER | PROPOSED TRAILER | REMOVE MBGR LF | MBGR (WOOD POST) LF | ADJUST MBGR ELEMENT LF | RECONSTRUCT MBGR (WOOD POST) LF | RECONSTRUCT MBGR (7' POST) LF | MBGR (8' WOOD POST) EA | MBGR (ELEMENT) EA | TRANSITION RAILING (TYPE WB) EA | BURIED POST ANCHOR (N) EA | TERMINAL SYSTEMS: ALTERNATIVE FLARED TERMINAL SYSTEM EA | TERMINAL SYSTEMS: ALTERNATIVE IN-LINE TERMINAL SYSTEM EA | TERMINAL SYSTEMS: TERMINAL ANCHOR Assy (TYPE SFT) EA | TERMINAL SYSTEMS: TERMINAL SYSTEM (TYPE CAT) EA | TERMINAL SYSTEMS: RELOCATE TERMINAL SYSTEM EA | DOUBLE MBGR (WOOD POST) LF | RAIL TENSIONING (Assy) EA | STRUCTURE NAME (SEE STRUCTURE PLANS) | COMMENTS | Loc |
| 116 | 41.20 | 41.35 | NB | 637.5 | MELT | BPA | AF | NC | 37.5 | | | 600 | | | | | 1 | 1 | | | | | | | | | 116 |
| 117 | 41.40 | 41.60 | NB | 875 | BPA | BPA | NC | NC | | | | | | | | | | | | | | | | | | | 117 |
| 118 | 41.71 | 41.88 | NB | 900 | BPA | SRT | NC | NC | | | 637.5 | 137.5 | 125 | | 4 | | 1 | | | | | | | | | | 118 |
| 119 | 41.75 | 41.86 | SB | 575 | SRT | BPA | NC | NC | | | | 537.5 | | | | | 1 | | | | | | | | | | 119 |
| 120 | 41.98 | 42.16 | NB | 950 | MELT | TB | AF | SFT | 37.5 | | 300 | 600 | 12.5 | | 19 | | | 1 | | 1 | | | | | | | 120 |
| 121 | 42.33 | 42.70 | NB | 1900 | BPA | TB | NC | SFT | | | | 1900 | | | 28 | | 1 | | | 1 | | | | | | | 121 |
| 122 | 42.73 | 42.99 | NB | 1375 | MELT | ATS | AF | TBC | 62.5 | | | 1308.5 | | | 5 | 1 | | 1 | | | | | | | BEAR CREEK #04-0199 | Conc BLOCK= 4'-0" | 122 |
| 123 | 42.98 | 42.99 | SB | 62.5 | ATS | MELT | NC | SFT | | | | | | | | | | | | 1 | | | | | BEAR CREEK #04-0199 | HAND EXCAVATE MBGR POST HOLES | 123 |
| 124 | 43.03 | 43.31 | NB | 1375 | ATS | NON-STD | NC | SFT | | | | 1175 | 200 | | 8 | | | | | 1 | | | | | BEAR CREEK #04-0199 | CONTINUES TO BARKDULL NB OFF EXISTING TRAILER NON-STANDARD | 124 |
| 125 | 43.03 | 43.05 | SB | 100 | TA | ATS | AF | TBC | 62.5 | | | 33.5 | | | | 1 | | 1 | | | | | | | BEAR CREEK #04-0199 | Conc BLOCK= 4'-0" | 125 |
| 126 | 43.28 | 43.32 | NB | 200 | CAA | ATS | AIL | TBC | 75 | | | 121 | | | | 1 | | | 1 | | | | | | BARKDULL Rd UC #04-0200 | Conc BLOCK= 4'-0" | 126 |
| 127 | 43.28 | 43.32 | SB | 200 | ATS | CAA | NC | AIL | 50 | | | 150 | | | | | | | 1 | | | | | | BARKDULL Rd UC #04-0200 | | 127 |
| 128 | 43.30 | 43.33 | NB | 612.5 | TA | TB | AF | SFT | 37.5 | | | 375 | 200 | | | | | 1 | | 1 | | | | | | NB ON-RAMP | 128 |
| 129 | 43.34 | 43.40 | NB | 312.5 | ATS | TB | NC | SFT | | | | 312.5 | | | | | | | | 1 | | | | | BARKDULL Rd UC #04-0200 | NB ON-RAMP | 129 |
| 130 | 43.34 | 43.38 | SB | 200 | CAA | ATS | AIL | TBC | 75 | | | 121 | | | | 1 | | | 1 | 1 | | | | | BARKDULL Rd UC #04-0200 | Conc BLOCK= 4'-0" | 130 |
| 131 | 43.35 | 43.69 | SB | 1775 | TA | TA | AF | SFT | 37.5 | | | 1737.5 | | | 3 | | | 1 | | 1 | | | | | | SB ON-RAMP | 131 |
| 132 | 43.41 | 43.67 | NB | 1400 | TA | TA | AF | SFT | 62.5 | | | 1112.5 | 250 | | 9 | | | 1 | | 1 | | | | | | NB ON-RAMP | 132 |
| 133 | 44.20 | 44.51 | SB | 1637.5 | BPA | TB | NC | SFT | | | | 1637.5 | | | 5 | | 1 | | | 1 | | | | | | | 133 |
| 134 | 44.29 | 44.48 | NB | 1000 | TA | TB | AF | SFT | 37.5 | | | 1000 | | | | | | 1 | | 1 | | | | | | | 134 |
| 135 | 44.77 | 45.01 | NB | 1262.5 | MELT | TB | AF | SFT | 37.5 | | | 1225 | | | 6 | | | 1 | | 1 | | | | | | | 135 |
| 136 | 45.05 | 45.23 | NB | 962.5 | TA | TB | AF | SFT | 37.5 | | | 925 | | | | | | 1 | | 1 | | | | | | | 136 |
| 137 | 45.41 | 45.57 | SB | 812.5 | ATS | TB | NC | SFT | | | | 812.5 | | | | | | | | 1 | | | | | GREENLAW CREEK #04-0206 | | 137 |
| 138 | 45.56 | 45.57 | NB | 62.5 | TA | ATS | AF | TBC | 62.5 | | | | | | | 1 | | 1 | | | | | | | GREENLAW CREEK #04-0206 | Conc BLOCK= 4'-0" | 138 |
| | | | | | | | | SUBTOTAL SHEET Q-6 | 712.5 | | 937.5 | 15,821.5 | 787.5 | | 87 | 5 | 5 | 11 | 3 | 14 | | | | | | | |

## SUMMARY OF QUANTITIES

## Q-6

REVISED BY | DATE REVISED
BRENDA C. HARWELL | JUAN SALAS
CALCULATED-DESIGNED BY | CHECKED BY
FUNCTIONAL SUPERVISOR: L.R. ASHLEY

STATE OF CALIFORNIA - DEPARTMENT OF TRANSPORTATION
Caltrans
DESIGN

\\sv01s01\PSESUBMIT\01_464001\146400pa006.dgn

LAST REVISION 06-25-09 | DATE PLOTTED => 23-SEP-2009 | TIME PLOTTED => 06:50

| Dist | COUNTY | ROUTE | POST MILES TOTAL PROJECT | SHEET No. | TOTAL SHEETS |
|---|---|---|---|---|---|
| 01 | Hum | 101 | T0.2/R126.0 | 23 | 72 |

REGISTERED CIVIL ENGINEER 6-26-09 DATE

9-21-09
PLANS APPROVAL DATE

REGISTERED PROFESSIONAL ENGINEER BRENDA HARWELL No. 64471 Exp. 6/30/11 CIVIL STATE OF CALIFORNIA

*THE STATE OF CALIFORNIA OR ITS OFFICERS OR AGENTS SHALL NOT BE RESPONSIBLE FOR THE ACCURACY OR COMPLETENESS OF SCANNED COPIES OF THIS PLAN SHEET.*

# METAL BEAM GUARD RAILING

| LOCATION / DESCRIPTION | | | | | | | | | | | | | | | | | | | TERMINAL SYSTEMS | | | | | | | | |
|---|---|---|---|---|---|---|---|---|---|---|---|---|---|---|---|---|---|---|---|---|---|---|---|---|---|---|---|
| Loc | POST MILE FROM | POST MILE TO | DIRECTION | EXISTING LENGTH LF | EXISTING LEADER | EXISTING TRAILER | PROPOSED LEADER | PROPOSED TRAILER | REMOVE MBGR LF | MBGR (WOOD POST) LF | ADJUST MBGR ELEMENT LF | RECONSTRUCT MBGR (WOOD POST) LF | RECONSTRUCT MBGR (7' POST) LF | MBGR (8' WOOD POST) EA | MBGR (ELEMENT) EA | TRANSITION RAILING (TYPE WB) EA | BURIED POST ANCHOR (N) EA | ALTERNATIVE FLARED TERMINAL SYSTEM EA | ALTERNATIVE IN-LINE TERMINAL SYSTEM EA | TERMINAL ANCHOR Assy (TYPE SFT) EA | TERMINAL SYSTEM (TYPE CAT) EA | RELOCATE TERMINAL SYSTEM EA | DOUBLE MBGR (WOOD POST) LF | RAIL TENSIONING (Assy) EA | STRUCTURE NAME (SEE STRUCTURE PLANS) | COMMENTS | Loc |
| 139 | 45.59 | 45.61 | SB | 112.5 | CAA | ATS | AIL | TBC | 75 | | | 33.5 | | | | 1 | | | 1 | | | | | | GREENLAW CREEK #04-0206 | Conc BLOCK = 4' | 139 |
| 140 | 45.89 | 45.90 | NB | 62.5 | TA | ATS | AF | TBC | 62.5 | | | | | | | 1 | | 1 | | | | | | | JORDAN Rd Sep #04-0207 | RELOCATE OSD<br>Conc BLOCK = 4' | 140 |
| 141 | 45.92 | 45.99 | NB | 350 | ATS | CAA | NC | SFT | | | | 350 | | | | | | | | 1 | | | | | JORDAN Rd Sep #04-0207 | 10" OSD | 141 |
| 142 | 45.92 | 45.93 | SB | 62.5 | TA | ATS | AF | TBC | 62.5 | | | | | | | 1 | | 1 | | | | | | | JORDAN Rd Sep #04-0207 | Conc BLOCK = 4' | 142 |
| 143 | 45.94 | 46.19 | NB | 1312.5 | CAA | ATS | AIL | TBC | 75 | | | 433.5 | 700 | | 10 | 1 | | | 1 | | | | | | JORDAN CREEK #04-0208L, #04-0208R | CIDH POSTS; Conc BLOCK =4';<br>ON-RAMP TO JORDAN Cr Br | 143 |
| 144 | 45.97 | 46.18 | SB-RT | 987.5 | ATS | CAA | NC | SFT | | | | 987.5 | | | 8 | | | | | 1 | | | | | JORDAN CREEK #04-0208L, #04-0208R | TO SB OFF-RAMP | 144 |
| 145 | 46.15 | 46.18 | SB-LT | 150 | ATS | CAA | NC | SFT | | | | 150 | | | 5 | | | | | 1 | | | | | JORDAN CREEK #04-0208L, #04-0208R | PILE OF ROCKS AT END OF Br<br>AC GRINDINGS | 145 |
| 146 | 46.14 | 46.19 | NB-LT | 250 | SRT | ATS | NC | TBC | 25 | | 221 | | | | | 1 | | | | | | | | | JORDAN CREEK #04-0208L, #04-0208R | Conc BLOCK = 4' | 146 |
| 147 | 46.23 | 46.24 | SB-LT | 62.5 | BPA | ATS | NC | TBC | 25 | | | 33.5 | | | | 1 | 1 | | | | | | | | JORDAN CREEK #04-0208L, #04-0208R | Conc BLOCK = 4' | 147 |
| 148 | 46.23 | 46.24 | SB-RT | 62.5 | SRT | ATS | NC | TBC | 25 | | | 33.5 | | | | 1 | | | | | | 1 | | | JORDAN CREEK #04-0208L, #04-0208R | Conc BLOCK = 4'; RELOCATE SRT; POSTS IN AC (12') | 148 |
| 149 | 46.27 | 46.36 | NB-LT | 475 | ATS | CAA | NC | SFT | | | | 475 | | | | | | | | 1 | | | | | JORDAN CREEK #04-0208L, #04-0208R | | 149 |
| 150 | 46.27 | 46.36 | NB-RT | 462.5 | ATS | CAA | NC | SFT | | | | 462.5 | | | | | | | | 1 | | | | | JORDAN CREEK #04-0208L, #04-0208R | | 150 |
| 151 | 46.39 | 46.50 | SB-LT | 1100 | TA | TB | BPA | BPA | | | | 200 | | | | | 2 | | | | | | | | | HEIGHT OK; (2) NEW BPA<br>RECONSTRUCT 100' N & S | 151 |
| 152 | 46.42 | 47.21 | NB-RT | 4000 | CAA | CAA | AF | SFT | | 25 | | 950 | 25 | | 10 | | | 1 | | 1 | | | | | | HEIGHT OK FOR 3000' (POSTS IN AC)<br>ADD 25' LEADING END,NEST RAIL | 152 |
| 153 | 46.82 | 46.92 | SB-LT | 525 | TA | TB | BPA | SFT | | | | | | | | | 1 | | | 1 | | | | | | AC GRINDINGS BEHIND RAIL | 153 |
| 154 | 46.94 | 47.16 | SB-LT | 1212.5 | TA | TB | AF | SFT | | | | | | | | | | 1 | | 1 | | | | | | AC GRINDINGS BEHIND RAIL | 154 |
| 155 | 47.23 | 47.40 | SB-LT | 875 | TA | CAA | AF | SFT | 37.5 | | | 837.5 | | | | | | 1 | | 1 | | | | | | BURIED POST AT TRAILER;<br>ADD FILL BEHIND AF | 155 |
| 156 | 47.90 | 47.95 | NB | 287.5 | CAA | ATS | AIL | TBC | 25 | | | | | | | 1 | | | 1 | | | | | | STAFFORD Rd UC #04-0205 | Conc BLOCK = 4' | 156 |
| 157 | 47.97 | 48.04 | SB | 350 | CAA | ATS | AIL | TBC | 25 | | | 277 | | | | 1 | | | 1 | | | 1 | | | STAFFORD Rd UC #04-0205 | DIKE (75') OSD (1,RESET)<br>Conc BLOCK = 4' | 157 |
| 158 | 48.00 | 48.28 | NB | 1425 | CAA | ATS | AIL | ATS | 25 | | | | 100 | | | 1 | | | 1 | | | | | | EEL RIVER Br & OH 04-0014 | Conc BLOCK = 4' | 158 |
| 159 | 48.01 | 48.29 | SB | 1475 | ATS | CAA | TBC | SFT | 25 | | | 500 | | | 5 | 1 | | | | 1 | | | | | EEL RIVER Br & OH 04-0014 | RECONSTRUCT 500' NORTHERLY END;<br>SOUTHERLY OK; Conc BLOCK = 4' | 159 |
| 160 | 60.48 | 60.50 | NB | 62.5 | SRT | ATS | NC | TBC | 20 | | | | | | | 1 | | | | | | 1 | | | TWELFTH STREET OC #04-0130 | Conc. BLOCK = 9' BELOW OC; | 160 |
| 161 | 60.48 | 60.50 | SB | 50 | SRT | ATS | NC | TBC | 12.5 | | | | | | | 1 | | | | | | 1 | | | TWELFTH STREET OC #04-0130 | Conc. BLOCK = 9' BELOW OC;<br>POSTS IN Conc | 161 |
| SUBTOTAL SHEET Q-7 | | | | | | | | | 520 | 25.0 | 221.0 | 5723.5 | 825 | | 38 | 13 | 4 | 5 | 5 | 10 | | 4 | | | | | |

# SUMMARY OF QUANTITIES
# Q-7

REVISED BY | DATE REVISED
BRENDA C. HARWELL | JUAN SALAS
CALCULATED-DESIGNED BY | CHECKED BY
FUNCTIONAL SUPERVISOR: L.R. ASHLEY
STATE OF CALIFORNIA - DEPARTMENT OF TRANSPORTATION
DESIGN
Caltrans®
\\sv01s01\PSESUBMITX01_464001\146400pa007.dgn

LAST REVISION 06-25-09 | DATE PLOTTED => 23-SEP-2009 | TIME PLOTTED => 06:50

| Dist | COUNTY | ROUTE | POST MILES TOTAL PROJECT | SHEET No. | TOTAL SHEETS |
|---|---|---|---|---|---|
| 01 | Hum | 101 | T0.2/R126.0 | 24 | 72 |

REGISTERED CIVIL ENGINEER 6-26-09 DATE

9-21-09
PLANS APPROVAL DATE

REGISTERED PROFESSIONAL ENGINEER BRENDA HARWELL No. 64471 Exp. 6/30/11 CIVIL STATE OF CALIFORNIA

*THE STATE OF CALIFORNIA OR ITS OFFICERS OR AGENTS SHALL NOT BE RESPONSIBLE FOR THE ACCURACY OR COMPLETENESS OF SCANNED COPIES OF THIS PLAN SHEET.*

# METAL BEAM GUARD RAILING

| LOCATION / DESCRIPTION | | | | | | | | | | | | | | | | | | | | | | | | | | | |
|---|---|---|---|---|---|---|---|---|---|---|---|---|---|---|---|---|---|---|---|---|---|---|---|---|---|---|---|
| Loc | POST MILE FROM | POST MILE TO | DIRECTION | EXISTING LENGTH LF | EXISTING LEADER | EXISTING TRAILER | PROPOSED LEADER | PROPOSED TRAILER | REMOVE MBGR LF | MBGR (WOOD POST) LF | ADJUST MBGR ELEMENT LF | RECONSTRUCT MBGR (WOOD POST) LF | RECONSTRUCT MBGR (7' POST) LF | MBGR (8' WOOD POST) EA | MBGR (ELEMENT) EA | TRANSITION RAILING (TYPE WB) EA | BURIED POST ANCHOR (N) EA | TERMINAL SYSTEMS: ALTERNATIVE FLARED TERMINAL SYSTEM EA | TERMINAL SYSTEMS: ALTERNATIVE IN-LINE TERMINAL SYSTEM EA | TERMINAL SYSTEMS: TERMINAL ANCHOR Assy (TYPE SFT) EA | TERMINAL SYSTEMS: TERMINAL SYSTEM (TYPE CAT) EA | TERMINAL SYSTEMS: RELOCATE TERMINAL SYSTEM EA | DOUBLE MBGR (WOOD POST) LF | RAIL TENSIONING (Assy) EA | STRUCTURE NAME (SEE STRUCTURE PLANS) | COMMENTS | Loc |
| 162 | 60.65 | 60.67 | NB | 87.5 | SRT | ATS | NC | TBC | 25 | | | | | | | 1 | | | | | | | | | ROHNER CREEK #04-0108 | Conc BLOCK = 4' | 162 |
| 163 | 60.68 | 60.69 | SB | 75 | SRT | ATS | NC | TBC | 25 | | | | | | | 1 | | | | | | 1 | | | ROHNER CREEK #04-0108 | RELOCATE SRT<br>Conc BLOCK = 4' | 163 |
| 164 | 61.35 | 61.53 | SB | 937.5 | ATS | SFT | NC | NC | | | | | | | 5 | | | | | | | | | | FORTUNA OH #04-0145 | HEIGHT OK.<br>Adj POSTS | 164 |
| 165 | 61.50 | 61.52 | NB | 87.5 | SRT | ATS | NC | TBC | 50 | | | | | | | 1 | | | | | | 1 | | | FORTUNA OH #04-0145 | PAVED; RELOCATE SRT<br>Conc BLOCK = 40' | 165 |
| 166 | 61.62 | 61.70 | NB | 425 | ATS | SFT | NC | NC | | | | | | | 5 | | | | | | | | | | FORTUNA OH #04-0145 | HEIGHT OK.<br>66' POSTS IN Conc | 166 |
| 167 | 61.62 | 61.64 | SB | 162.5 | SRT | ATS | NC | TBC | 65 | | 60 | | | | | 1 | | | | | | | | | FORTUNA OH #04-0145 | Conc BLOCK = 40' | 167 |
| 168 | 62.21 | 62.23 | NB | 62.5 | SRT | ATS | AIL | TBC | 37.5 | | | | | | | 1 | | | 1 | | | | | | PALMER Blvd UC #04-0112 | CHANGE SRT TO AIL<br>Conc BLOCK = 6'-6" | 168 |
| 169 | 62.25 | 62.27 | SB | 62.56 | SRT | ATS | NC | TBC | 25 | | | | | | | 1 | | | | | | | | | PALMER Blvd UC #04-0112 | Conc BLOCK = 6'-6"<br>Misc HMA; 25' POSTS IN AC | 169 |
| 170 | 63.07 | 63.09 | NB | 150 | SRT | ATS | NC | TBC | 25 | | 81 | | | | | 1 | | | | | | | | | FINCH CREEK #04-0113 | Conc BLOCK = 6'-6" | 170 |
| 171 | 63.11 | 63.13 | SB | 62.5 | BPA | ATS | NC | TBC | 25 | | 31 | | | | 2 | 1 | 1 | | | | | | | | FINCH CREEK #04-0113 | Conc BLOCK = 6'-6"<br>Misc HMA; OSD (1) | 171 |
| 172 | 65.89 | 65.94 | SB | 325 | TA | TA | AF | SFT | 37.5 | | | 225 | 62.5 | | 5 | | | 1 | | 1 | | | | | LOLETA DRIVE OC | ON-RAMP; PRE-BEND ELEMENT;<br>SHORTEN LEADER 12'; NEST RAIL | 172 |
| 173 | 65.90 | 65.94 | NB | 412.5 | TA | TA | BPA | SFT | | | | 350 | 62.5 | | | | 1 | | | 1 | | | | | LOLETA DRIVE OC | OFF-RAMP<br>Misc HMA - DRAINAGE FLUME | 173 |
| 174 | 65.96 | 66.03 | SB | 400 | TA | TA | AF | SFT | 37.5 | | | 362.5 | | | | | | 1 | | 1 | | | | | LOLETA DRIVE OC | OFF-RAMP | 174 |
| 175 | 65.98 | 66.00 | NB | 112.5 | TA | BPA | AF | NC | 37.5 | | | 75 | | | | | 1 | 1 | | | | | | | LOLETA DRIVE OC | ON-RAMP | 175 |
| 176 | 70.02 | 70.11 | NB | 500 | SRT | TB | NC | SFT | | | | 50 | | | 4 | | | | | 1 | | | | | | | 176 |
| 177 | 70.35 | 70.61 | SB | 1475 | ATS | TB | NC | SFT | | | | 750 | | | 8 | | | | | 1 | | | | | TOMPKINS HILL Rd OH | | 177 |
| 178 | 70.79 | 70.87 | SB | 513 | TA | TA | AIL | AF | 87.5 | | | 175.5 | 250 | | 5 | | | 1 | 1 | | | | | | TOMPKINS HILL Rd OH | SB OFF<br>NEST RAIL FOR DRAINAGE | 178 |
| 179 | 71.25 | 71.46 | SB | 1175 | SRT | TA | NC | SFT | | | | | | | | | | | | 1 | | | | | | HEIGHT OK.<br>REPLACE TRAILER | 179 |
| 180 | 72.01 | 72.03 | NB | 75 | SRT | ATS | NC | TBC | 75 | | | | | | | 1 | | | | | | | | | ORCHARD Ave UC #04-0122 | FIELDS LANDING | 180 |
| 181 | 72.04 | 72.06 | SB | 75 | SRT | ATS | AIL | TBC | 75 | | | | | | | 1 | | | 1 | | | | | | ORCHARD Ave UC #04-0122 | FIELDS LANDING<br>HINGE POINT - USE AIL | 181 |
| 182 | 72.39 | 72.62 | SB | 1225 | SRT | TA | AF | SFT | 37.5 | | | | | | | | | 1 | | 1 | | | | | | HEIGHT OK. DAMAGED SRT<br>REPLACE LEADER (AF) | 182 |
| 183 | 72.87 | 72.88 | NB | 75 | SRT | ATS | AIL | TBC | 37.5 | | | | | | | 1 | | | 1 | | | | | | KING SALMON Ave UC #04-0067L & #04-0067R | NEW AIL<br>Conc Block = 4' | 183 |
| 184 | 72.87 | 72.88 | Med | 75 | CAA | ATS | CAT | TBC | 75 | | | | | | | 1 | | | | | 1 | | | | KING SALMON Ave UC #04-0067L & #04-0067R | NB Med | 184 |
| | | | | | | | | SUBTOTAL SHEET Q-8 | 777.5 | | 172 | 1988 | 375 | | 34 | 12 | 3 | 5 | 4 | 7 | 1 | 2 | | | | | |

## SUMMARY OF QUANTITIES
## Q-8

REVISED BY | DATE REVISED
BRENDA C. HARWELL | JUAN SALAS
CALCULATED-DESIGNED BY | CHECKED BY
FUNCTIONAL SUPERVISOR: L.R. ASHLEY

STATE OF CALIFORNIA - DEPARTMENT OF TRANSPORTATION
Caltrans® DESIGN

\\sv01s01\PSESUBMIT\01_464001\146400pa008.dgn

LAST REVISION 06-25-09 | DATE PLOTTED => 23-SEP-2009 | TIME PLOTTED => 06:50

| Dist | COUNTY | ROUTE | POST MILES TOTAL PROJECT | SHEET No. | TOTAL SHEETS |
|---|---|---|---|---|---|
| 01 | Hum | 101 | T0.2/R126.0 | 25 | 72 |

REGISTERED CIVIL ENGINEER 6-26-09 DATE

9-21-09
PLANS APPROVAL DATE

REGISTERED PROFESSIONAL ENGINEER BRENDA HARWELL No. 64471 Exp. 6/30/11 CIVIL STATE OF CALIFORNIA

*THE STATE OF CALIFORNIA OR ITS OFFICERS OR AGENTS SHALL NOT BE RESPONSIBLE FOR THE ACCURACY OR COMPLETENESS OF SCANNED COPIES OF THIS PLAN SHEET.*

# METAL BEAM GUARD RAILING

| LOCATION / DESCRIPTION | | | | | | | | | | | | | | | | | | | TERMINAL SYSTEMS | | | | | | | | |
|---|---|---|---|---|---|---|---|---|---|---|---|---|---|---|---|---|---|---|---|---|---|---|---|---|---|---|---|
| Loc | POST MILE FROM | POST MILE TO | DIRECTION | EXISTING LENGTH | EXISTING LEADER | EXISTING TRAILER | PROPOSED LEADER | PROPOSED TRAILER | REMOVE MBGR | MBGR (WOOD POST) | ADJUST MBGR ELEMENT | RECONSTRUCT MBGR (WOOD POST) | RECONSTRUCT MBGR (7' POST) | MBGR (8' WOOD POST) | MBGR (ELEMENT) | TRANSITION RAILING (TYPE WB) | BURIED POST ANCHOR (N) | ALTERNATIVE FLARED TERMINAL SYSTEM | ALTERNATIVE IN-LINE TERMINAL SYSTEM | TERMINAL ANCHOR Assy (TYPE SFT) | TERMINAL SYSTEM (TYPE CAT) | RELOCATE TERMINAL SYSTEM | DOUBLE MBGR (WOOD POST) | RAIL TENSIONING (Assy) | STRUCTURE NAME (SEE STRUCTURE PLANS) | COMMENTS | Loc |
| | | | | LF | | | | | LF | LF | LF | LF | LF | EA | EA | EA | EA | EA | EA | EA | EA | EA | LF | EA | | | |
| 185 | 72.90 | 72.91 | SB | 75 | SRT | ATS | NC | TBC | 25 | | | | | | | 1 | | | | | | | | | KING SALMON Ave UC #04-0067L & #04-0067R | Conc Block = 4' | 185 |
| 186 | 72.90 | 72.91 | Med | 75 | CAA | ATS | CAT | TBC | 25 | | | | | | | 1 | | | | | 1 | | | | KING SALMON Ave UC #04-0067L & #04-0067R | SB Med; Conc Block = 4' | 186 |
| 187 | 73.72 | 73.84 | NB | 62.5 | BPA | ATS | NC | TBC | 25 | | | | | | | 1 | 1 | | | | | | | | SPRUCE POINT OC #04-0071 | Conc Block = 9' | 187 |
| 188 | 73.72 | 73.84 | SB | 62.5 | BPA | ATS | NC | TBC | 62.5 | | | | | | | 1 | 1 | | | | | | | | SPRUCE POINT OC #04-0071 | REMOVE DIRT UNDER MBGR CT UTILITY VAULT; Conc BLOCK=9' | 188 |
| 189 | 113.50 | 113.61 | SB | 575 | CAA | CAA | AF | SFT | 37.5 | | | 537.5 | | | 2 | | | 1 | | 1 | | | | | | | 189 |
| 190 | 114.09 | 114.28 | SB | 1000 | CAA | CAA | AF | SFT | 37.5 | | | 962.5 | | | 8 | | | 1 | | 1 | | | | | | DIKE; OSD | 190 |
| 191 | 115.51 | 115.55 | SB | 200 | CAA | CAA | AF | AF | 75 | | | 125 | | | | | | 2 | | | | | | | | DIKE; OSD; VERIZON UTILITIES RAISE HMA 10:1TAPER | 191 |
| 192 | 116.35 | 116.42 | SB | 350 | BPA | CAA | NC | AIL | 50 | | | 275 | 25 | | | | 1 | | 1 | | | | | | | | 192 |
| 193 | 120.01 | 120.02 | NB | 75 | TA | ATS | AF | TBC | 62.5 | | | | | | | 1 | | 1 | | | | | | | REDWOOD CREEK OVERFLOW #04-0034 | PRE-BEND ELEMENT Conc Block = 5' | 193 |
| 194 | 120.01 | 120.02 | SB | 62.5 | ATS | TA | NC | SFT | | | | 62.5 | | | | | | | | 1 | | | | | REDWOOD CREEK OVERFLOW #04-0034 | PAVED | 194 |
| 195 | 120.03 | 120.04 | NB | 62.5 | ATS | TA | NC | SFT | | | | 62.5 | | | | | | | | 1 | | | | | REDWOOD CREEK OVERFLOW #04-0034 | PAVED RAISE HMA TO 10:1 TAPER | 195 |
| 196 | 120.03 | 120.04 | SB | 62.5 | TA | ATS | AF | TBC | 62.5 | | | | | | | 1 | | 1 | | | | | | | REDWOOD CREEK OVERFLOW #04-0034 | PAVED Conc BLOCK = 5' | 196 |
| 197 | 121.08 | 121.09 | NB | 62.5 | TA | ATS | AF | TBC | 62.5 | | | | | | | 1 | | 1 | | | | | | | REDWOOD CREEK #04-0028 | Conc BLOCK = 9'-6" | 197 |
| 198 | 121.08 | 121.09 | SB | 62.5 | ATS | TA | NC | TBC | | | | | | | | 1 | | | | 1 | | | | | REDWOOD CREEK #04-0028 | PAVED | 198 |
| 199 | 121.21 | 121.22 | NB | 62.5 | ATS | TA | NC | TBC | | | | | | | | 1 | | | | 1 | | | | | REDWOOD CREEK #04-0028 | PAVED REMOVE DIKE IN FRONT OF MBGR | 199 |
| 200 | 121.21 | 121.22 | SB | 62.5 | TA | ATS | AF | TBC | 62.5 | | | | | | | 1 | | 1 | | | | | | | REDWOOD CREEK #04-0028 | PAVED Conc BLOCK = 9'-6" | 200 |
| 201 | 122.85 | 122.86 | NB | 62.5 | TA | ATS | AIL | TBC | 62.5 | | | | | | | 1 | | | 1 | | | | | | PRAIRIE CREEK #04-0029 | Conc BLOCK = 5' | 201 |
| 202 | 122.85 | 122.86 | SB | 62.5 | ATS | TA | NC | SFT | | | | 62.5 | | | | | | | | 1 | | | | | PRAIRIE CREEK #04-0029 | | 202 |
| 203 | 122.86 | 122.89 | NB | 62.5 | ATS | TA | NC | SFT | | | | 62.5 | | | | | | | | 1 | | | | | PRAIRIE CREEK #04-0029 | Conc BLOCK = 5' | 203 |
| 204 | 122.88 | 122.89 | SB | 62.5 | TA | ATS | AIL | TBC | 62.5 | | | | | | | 1 | | | 1 | | | | | | PRAIRIE CREEK #04-0029 | | 204 |
| 205 | 124.69 | 124.70 | NB | 62.5 | TA | ATS | AF | TBC | 62.5 | | | | | | | 1 | | 1 | | | | | | | LOST MAN CREEK #04-0030 | Conc BLOCK = 4'-6" | 205 |
| 206 | 124.69 | 124.70 | SB | 62.5 | ATS | TA | NC | SFT | | | | 62.5 | | | | | | | | 1 | | | | | LOST MAN CREEK #04-0030 | | 206 |
| 207 | 124.71 | 124.72 | NB | 62.5 | ATS | TB | NC | SFT | | | | 12.5 | 50 | | | | | | | 1 | | | | | LOST MAN CREEK #04-0030 | HINGE POINT <36"; USE 7' POST | 207 |
| SUBTOTAL SHEET Q-9 | | | | | | | | | 775 | | | 2225 | 75 | | 10 | 13 | 3 | 9 | 3 | 10 | 1 | | | | | | |

## SUMMARY OF QUANTITIES
## Q-9

REVISED BY | DATE REVISED
BRENDA C. HARWELL | JUAN SALAS
CALCULATED-DESIGNED BY | CHECKED BY
FUNCTIONAL SUPERVISOR: L.R. ASHLEY

STATE OF CALIFORNIA - DEPARTMENT OF TRANSPORTATION
Caltrans
DESIGN

\\sv01s01\PSESUBMITV01_464001\146400pa009.dgn

LAST REVISION 06-25-09 | DATE PLOTTED => 23-SEP-2009 | TIME PLOTTED => 06:50

| Dist | COUNTY | ROUTE | POST MILES TOTAL PROJECT | SHEET No. | TOTAL SHEETS |
|---|---|---|---|---|---|
| 01 | Hum | 101 | T0.2/R126.0 | 26 | 72 |

REGISTERED CIVIL ENGINEER 6-26-09 DATE

9-21-09
PLANS APPROVAL DATE

REGISTERED PROFESSIONAL ENGINEER BRENDA HARWELL No. 64471 Exp. 6/30/11 CIVIL STATE OF CALIFORNIA

*THE STATE OF CALIFORNIA OR ITS OFFICERS OR AGENTS SHALL NOT BE RESPONSIBLE FOR THE ACCURACY OR COMPLETENESS OF SCANNED COPIES OF THIS PLAN SHEET.*

# METAL BEAM GUARD RAILING

| LOCATION / DESCRIPTION | | | | | | | | | | | | | | | | | | | | | | | | | | | |
|---|---|---|---|---|---|---|---|---|---|---|---|---|---|---|---|---|---|---|---|---|---|---|---|---|---|---|---|
| LOC. | POST MILE | | DIRECTION | EXISTING LENGTH | EXISTING LEADER | EXISTING TRAILER | PROPOSED LEADER | PROPOSED TRAILER | REMOVE MBGR | MBGR (WOOD POST) | ADJUST MBGR ELEMENT | RECONSTRUCT MBGR (WOOD POST) | RECONSTRUCT MBGR (7' POST) | MBGR (8' WOOD POST) | MBGR (ELEMENT) | TRANSITION RAILING (TYPE WB) | BURIED POST ANCHOR (N) | TERMINAL SYSTEMS: ALTERNATIVE FLARED TERMINAL SYSTEM | TERMINAL SYSTEMS: ALTERNATIVE IN-LINE TERMINAL SYSTEM | TERMINAL SYSTEMS: TERMINAL ANCHOR Assy (TYPE SFT) | TERMINAL SYSTEMS: TERMINAL SYSTEM (TYPE CAT) | TERMINAL SYSTEMS: RELOCATE TERMINAL SYSTEM | DOUBLE MBGR (WOOD POST) | RAIL TENSIONING (Assy) | STRUCTURE NAME (SEE STRUCTURE PLANS) | COMMENTS | LOC |
| | FROM | TO | | LF | | | | | LF | LF | LF | LF | LF | EA | EA | EA | EA | EA | EA | EA | EA | EA | LF | EA | | | |
| 208 | 124.71 | 124.72 | SB | 62.5 | TA | ATS | AF | TBC | 62.5 | | | | | | | 1 | | 1 | | | | | | | LOST MAN CREEK #04-0030 | Conc BLOCK = 4'-6" | 208 |
| 209 | 124.83 | 124.93 | SB | 525 | TA | TB | AF | SFT | 37.5 | 12.5 | | 487.5 | | | 5 | | | 1 | | 1 | | | | | | ADD 12' & AF/REMOVE DIRT UNDER MBGR | 209 |
| 210 | 125.78 | 125.98 | SB | 1062.5 | SRT | TA | NC | AIL | 50 | | 975 | | | | | | | | 1 | | | | | | | PAVED; Adj POSTS | 210 |
| TOTAL THIS SHEET | | | | | | | | | 150.0 | 12.5 | 975.0 | 487.5 | | | 5 | 1 | | 2 | 1 | 1 | | | | | | | |
| SUBTOTAL SHEET Q-1 | | | | | | | | | 497.5 | 62.5 | 2701.3 | 1865.0 | 212.5 | | 31 | 13 | 6 | 3 | 1 | 3 | | 5 | | | | | |
| SUBTOTAL SHEET Q-2 | | | | | | | | | 600.0 | 162.5 | 537.5 | 8862.5 | 1112.5 | 12.5 | 35 | | 20 | 3 | 1 | 15 | 4 | | 100 | 4 | | | |
| SUBTOTAL SHEET Q-3 | | | | | | | | | 380.0 | 200 | 4832.0 | 650.0 | 525.0 | | 39 | 4 | 14 | 6 | 1 | 10 | | | | | | | |
| SUBTOTAL SHEET Q-4 | | | | | | | | | 217.5 | | 11360.0 | 867.0 | 125.0 | | 58 | 7 | 7 | 1 | | 4 | | 1 | | | | | |
| SUBTOTAL SHEET Q-5 | | | | | | | | | 550.0 | | 4342.5 | 15981.5 | 250.0 | | 134 | 9 | 7 | 8 | | 7 | | | | | | | |
| SUBTOTAL SHEET Q-6 | | | | | | | | | 712.5 | | 937.5 | 15821.5 | 787.5 | | 87 | 5 | 5 | 11 | 3 | 14 | | | | | | | |
| SUBTOTAL SHEET Q-7 | | | | | | | | | 520.0 | 25 | 221 | 5723.5 | 825.0 | | 38 | 13 | 4 | 5 | 5 | 10 | | 4 | | | | | |
| SUBTOTAL SHEET Q-8 | | | | | | | | | 777.5 | | 172 | 1988.0 | 375.0 | | 34 | 12 | 3 | 5 | 4 | 7 | 1 | 2 | | | | | |
| SUBTOTAL SHEET Q-9 | | | | | | | | | 775.0 | | | 2225.0 | 75 | | 10 | 13 | 3 | 9 | 3 | 10 | 1 | | | | | | |
| TOTAL | | | | | | | | | 5180.0 | 462.5 | 26078.8 | 54471.5 | 4287.5 | 12.5 | 471 | 77 | 69 | 53 | 19 | 81 | 6 | 12 | 100 | 4 | | | |

## RECONSTRUCT MBGR (NEW STEEL POSTS, 24" CIDH PILING)

| LOCATION | | TOTAL DETAIL LENGTH |
|---|---|---|
| POSTMILE | DIRECTION | LF |
| 15.70 | SB | 25 |
| 40.62 | SB | 25 |
| 40.78 | NB | 25 |
| 46.18 | NB | 50 |
| | TOTAL | 125 |

## HAND EXCAVATE SELECTED MBGR HOLES IN CONFLICT WITH HIGH RISK UTILITIES

| LOCATION | | TOTAL QUANTITY |
|---|---|---|
| POSTMILE | DIRECTION | EA |
| 15.70 | SB | 33 |
| 40.62 | SB | 118 |
| 43.00 | SB | 11 |
| | | |
| | TOTAL | 162 |

## SUMMARY OF QUANTITIES
## Q-10

REVISED BY | DATE REVISED
BRENDA C. HARWELL | JUAN SALAS
CALCULATED-DESIGNED BY | CHECKED BY
FUNCTIONAL SUPERVISOR: L.R. ASHLEY

STATE OF CALIFORNIA - DEPARTMENT OF TRANSPORTATION
Caltrans
DESIGN

\\sv01s01\P&SSUBMIT\01_464001\146400pa010.dgn

LAST REVISION 06-25-09 | DATE PLOTTED => 23-SEP-2009 | TIME PLOTTED => 06:51

| Dist | COUNTY | ROUTE | POST MILES TOTAL PROJECT | SHEET No. | TOTAL SHEETS |
|---|---|---|---|---|---|
| 01 | Hum | 101 | T0.2/R126.0 | 27 | 72 |

REGISTERED CIVIL ENGINEER 6-26-09 DATE

9-21-09
PLANS APPROVAL DATE

REGISTERED PROFESSIONAL ENGINEER BRENDA HARWELL No. 64471 Exp. 6/30/11 CIVIL STATE OF CALIFORNIA

*THE STATE OF CALIFORNIA OR ITS OFFICERS OR AGENTS SHALL NOT BE RESPONSIBLE FOR THE ACCURACY OR COMPLETENESS OF SCANNED COPIES OF THIS PLAN SHEET.*

NOTE:
DELINEATORS TO BE REPLACE-IN-KIN OR AS DIRECTED BY THE ENGINEER.

# ROADWAY QUANTITIES

| Loc | POST MILE FROM | POST MILE TO | DIRECTION | EXISTING LENGTH | MARKERS: GUARD RAILING DELINEATOR | MARKERS: RESET MARKER | AC DIKE: REMOVE AC DIKE | AC DIKE: PLACE HMA DIKE (TYPE F) | AC DIKE: PLACE HMA DIKE (TYPE C) | HMA (TYPE A) | PLACE HMA (Misc AREA) | WEED CONTROL MAT (FIBER) | IMPORTED MATERIAL (SHOULDER BACKING) | ROADWAY EXCAVATION (N) | STRUCTURE NAME SEE STRUCTURE PLANS | COMMENTS | Loc |
|---|---|---|---|---|---|---|---|---|---|---|---|---|---|---|---|---|---|
| | | | | LF | EA | EA | LF | LF | LF | TON | SQYD | SQYD | TON | TON | | | |
| 1 | 0.18 | 0.31 | NB | 700 | 4 | 1 | 10 | 10 | | 0.15 | | 240 | | 2.0 | | NO SHOULDER, Rdwy Exc HMA DIKE | 1 |
| 2 | 0.31 | 0.36 | SB | 162.5 | | | | | | | | 67 | | | | | 2 |
| 3 | 5.18 | 5.22 | NB | 262.5 | | 3 | | | | | | 94 | | | | | 3 |
| 4 | 5.47 | 5.54 | NB | 375 | | 4 | | | | | | 138 | | | | | 4 |
| 5 | 5.61 | 5.63 | NB | 125 | 1 | | | | | | | 46 | | | S FORK EEL RIVER Br #04-0241 | | 5 |
| 6 | 5.61 | 5.63 | SB | 137.5 | 1 | | | | | | | 50 | | | S FORK EEL RIVER Br #04-0241 | | 6 |
| 7 | 5.90 | 5.92 | NB | 75 | | 1 | | | | | | 25 | | | S FORK EEL RIVER Br #04-0241 | Rdwy Exc REMOVE EARTH UNDER MBGR | 7 |
| 8 | 5.90 | 5.97 | SB | 375 | 1 | 1 | 35 | 35 | | 0.51 | 3.0 | 129 | | 2.0 | S FORK EEL RIVER Br #04-0241 | BURIED DIKE; RELOCATE OSD HMA (Misc AC) TAPER 10(H):1(V) | 8 |
| 9 | 6.92 | 6.96 | NB | 250 | 3 | 2 | | | | | | 83 | | | | | 9 |
| 10 | 7.75 | 7.77 | SB | 62.5 | 2 | 1 | | | | | | 21 | | | OLD US 101 UC #04-216 | | 10 |
| 11 | 7.75 | 7.76 | NB | 100 | 2 | | | | | | | 32 | | | OLD US 101 UC #04-216 | | 11 |
| 12 | 7.80 | 7.85 | SB | 275 | 1 | 1 | | | | | | 90 | | | S FORK EEL RIVER #04-155 | | 12 |
| 13 | 7.80 | 7.85 | NB | 213 | 1 | | | | | | | 71 | | | S FORK EEL RIVER #04-155 | | 13 |
| 14 | 8.00 | 8.02 | SB | 87.5 | 1 | 7 | | | | | | 29 | | | S FORK EEL RIVER #04-155 | | 14 |
| 15 | 8.12 | 8.30 | NB | 950 | 3 | | | | | | | 315 | | | S FORK EEL RIVER #04-212 | LARGE TURNOUT | 15 |
| 16 | 8.42 | 8.43 | SB | 75 | 1 | | | | | | | 23 | | | S FORK EEL RIVER #04-212 | POSTS IN AC LEAVE OSD AS-IS | 16 |
| 17 | 8.42 | 8.49 | NB | 320 | 1 | 5 | | | | | | 107 | | | S FORK EEL RIVER #04-212 | | 17 |
| 18 | 8.59 | 8.60 | NB | 75 | 1 | 1 | | | | | | 23 | | | BENBOW UC #04-211 | DIKE & OSD OK | 18 |
| 19 | 8.60 | 8.60 | SB | 75 | 1 | | | | | | | 23 | | | BENBOW UC #04-211 | | 19 |
| 20 | 8.60 | 8.60 | SB | 437.5 | 1 | | | | | | | 146 | | | E BRANCH S FORK EEL #04-439 | | 20 |
| 21 | 8.79 | 8.80 | NB | 75 | 1 | | | | | | | 23 | | | E BRANCH S FORK EEL #04-439 | RELOCATE OSD REMOVE/REPLACE DIKE | 21 |
| 22 | 10.15 | 10.19 | SB | 537.5 | 9 | | 471 | 471 | 37.5 | 7.47 | | 186 | | | TOOBY UC Br 04-0255 | | 22 |
| 23 | 10.15 | 10.19 | NB | 162.5 | 3 | | | | | | | 54 | | | TOOBY UC Br 04-0255 | | 23 |
| SUBTOTAL SHEET Q-11 | | | | | 38 | 27 | 516 | 516 | 37.5 | 8.13 | 3.0 | 2015 | | 4.0 | | | |

(N): NOT A SEPARATE PAY ITEM, FOR INFORMATION ONLY.

## SUMMARY OF QUANTITIES
## Q-11

REVISED BY | DATE REVISED
BRENDA C. HARWELL | JUAN SALAS
CALCULATED-DESIGNED BY | CHECKED BY
FUNCTIONAL SUPERVISOR: L.R. ASHLEY

STATE OF CALIFORNIA - DEPARTMENT OF TRANSPORTATION
Caltrans DESIGN

\\sv01s01\PSESUBMIT\01_464001\146400pa011.dgn

LAST REVISION 06-25-09 | DATE PLOTTED => 23-SEP-2009 | TIME PLOTTED => 06:51

| Dist | COUNTY | ROUTE | POST MILES TOTAL PROJECT | SHEET No. | TOTAL SHEETS |
|---|---|---|---|---|---|
| 01 | Hum | 101 | T0.2/R126.0 | 28 | 72 |

REGISTERED CIVIL ENGINEER 6-26-09 DATE

9-21-09
PLANS APPROVAL DATE

REGISTERED PROFESSIONAL ENGINEER BRENDA HARWELL No. 64471 Exp. 6/30/11 CIVIL STATE OF CALIFORNIA

THE STATE OF CALIFORNIA OR ITS OFFICERS OR AGENTS SHALL NOT BE RESPONSIBLE FOR THE ACCURACY OR COMPLETENESS OF SCANNED COPIES OF THIS PLAN SHEET.

# ROADWAY QUANTITIES

| Loc | POST MILE FROM | POST MILE TO | DIRECTION | EXISTING LENGTH | MARKERS: GUARD RAILING DELINEATOR | MARKERS: RESET MARKER | AC DIKE: REMOVE AC DIKE | AC DIKE: PLACE HMA DIKE (TYPE F) | AC DIKE: PLACE HMA DIKE (TYPE C) | HMA (TYPE A) | PLACE HMA (Misc AREA) | WEED CONTROL MAT (FIBER) | IMPORTED MATERIAL (SHOULDER BACKING) | ROADWAY EXCAVATION (N) | STRUCTURE NAME SEE STRUCTURE PLANS | COMMENTS | Loc |
|---|---|---|---|---|---|---|---|---|---|---|---|---|---|---|---|---|---|
| | | | | LF | EA | EA | LF | LF | LF | TON | SQYD | SQYD | TON | TON | | | |
| 24 | 10.52 | 10.61 | NB | 475 | | | | | | | | 158 | | | | | 24 |
| 25 | 10.54 | 10.64 | SB | 525 | 15 | | | | | | | 173 | | | | TWO BURNED POSTS, 25′ POSTS IN AC; NEW DIKE Misc AC | 25 |
| 26 | 10.77 | 10.80 | SB | 150 | 3 | | | | | | | 50 | | | | | 26 |
| 27 | 10.86 | 10.88 | SB | 88 | 2 | | | | | | | 29 | | | | | 27 |
| 28 | 11.11 | 11.13 | Med | 100 | 3 | | | | | | | 46 | | | SPROWL CREEK Rd OC | | 28 |
| 29 | 11.11 | 11.13 | Med | 100 | 3 | | | | | | | 46 | | | SPROWL CREEK Rd OC | | 29 |
| 30 | 11.25 | 11.27 | NB | 87.5 | 2 | | 88 | 88 | | 1.29 | | 29 | | | | | 30 |
| 31 | 11.29 | 11.35 | SB | 300 | 3 | | | | | | | 100 | | | | OFF-RAMP | 31 |
| 32 | 11.35 | 11.37 | NB | 87.5 | 2 | 1 | | | | | | 29 | | | OFF-RAMP PROTECTING OH SIGN | BURIED DIKE | 32 |
| 33 | 11.40 | 11.51 | SB | 250 | 2 | 2 | 250 | 250 | | 3.68 | | 83 | | | | | 33 |
| 34 | 11.49 | 11.51 | Med | 100 | 3 | 2 | | | | | | 43 | | | REDWOOD Dr OC | | 34 |
| 35 | 11.49 | 11.51 | Med | 100 | 3 | | | | | | | 46 | | | REDWOOD Dr OC | | 35 |
| 36 | 11.52 | 11.58 | NB | 300 | 2 | | | | | | | 100 | | | REDWOOD Dr OC | ON-RAMP - L† | 36 |
| 37 | 11.60 | 11.74 | NB | 825 | 12 | 1 | 819 | 819 | | 12.04 | | 275 | | | REDWOOD Dr OC | ON-RAMP - R† | 37 |
| 38 | 11.62 | 11.74 | SB | 625 | 5 | 1 | 625 | 625 | | 9.19 | | 208 | | | | | 38 |
| 39 | 11.79 | 11.90 | SB | 575 | 6 | 1 | | | | | | 192 | | | ALDERPOINT Rd OC | | 39 |
| 40 | 11.86 | 11.91 | NB | 325 | 5 | 1 | | | | | | 108 | | | | | 40 |
| 41 | 12.03 | 12.21 | SB | 912.5 | 6 | 1 | 914 | 914 | | 13.00 | | 304 | | | | | 41 |
| 42 | 12.06 | 12.20 | NB | 725 | 6 | 1 | | | | | | 242 | | | | | 42 |
| 43 | 12.26 | 12.30 | NB | 225 | 3 | 1 | 123 | 123 | | 1.81 | | 75 | | | | | 43 |
| 44 | 12.26 | 12.31 | SB | 300 | 3 | 1 | 300 | 263 | 37.5 | 4.19 | | 107 | | | | | 44 |
| 45 | 12.48 | 12.87 | NB | 2075 | 28 | 5 | 1857 | 1838 | 37.5 | 27.34 | | 698 | | | | | 45 |
| 46 | 12.49 | 12.82 | SB | 1912.5 | 28 | 2 | 1913 | 1913 | | 28.12 | | 638 | | | | | 46 |
| SUBTOTAL SHEET Q-12 | | | | | 145 | 20 | 6889 | 6833 | 75.0 | 100.66 | | 3779 | | | | | |

(N): NOT A SEPARATE PAY ITEM, FOR INFORMATION ONLY.

## SUMMARY OF QUANTITIES

Q-12

REVISED BY | DATE REVISED
BRENDA C. HARWELL | JUAN SALAS
CALCULATED-DESIGNED BY | CHECKED BY
FUNCTIONAL SUPERVISOR: L.R. ASHLEY
STATE OF CALIFORNIA - DEPARTMENT OF TRANSPORTATION
Caltrans
DESIGN

\\sv01s01\PSESUBMIT\01_464001\146400pa012.dgn

LAST REVISION | DATE PLOTTED => 23-SEP-2009 | TIME PLOTTED => 06:51
06-25-09

| Dist | COUNTY | ROUTE | POST MILES TOTAL PROJECT | SHEET No. | TOTAL SHEETS |
|---|---|---|---|---|---|
| 01 | Hum | 101 | T0.2/R126.0 | 29 | 72 |

REGISTERED CIVIL ENGINEER 6-26-09 DATE

9-21-09
PLANS APPROVAL DATE

REGISTERED PROFESSIONAL ENGINEER BRENDA HARWELL No. 64471 Exp. 6/30/11 CIVIL STATE OF CALIFORNIA

*THE STATE OF CALIFORNIA OR ITS OFFICERS OR AGENTS SHALL NOT BE RESPONSIBLE FOR THE ACCURACY OR COMPLETENESS OF SCANNED COPIES OF THIS PLAN SHEET.*

# ROADWAY QUANTITIES

| Loc | POST MILE FROM | POST MILE TO | DIRECTION | EXISTING LENGTH | MARKERS: GUARD RAILING DELINEATOR | MARKERS: RESET MARKER | AC DIKE: REMOVE AC DIKE | AC DIKE: PLACE HMA DIKE (TYPE F) | AC DIKE: PLACE HMA DIKE (TYPE C) | HMA (TYPE A) | PLACE HMA (Misc AREA) | WEED CONTROL MAT (FIBER) | IMPORTED MATERIAL (SHOULDER BACKING) | ROADWAY EXCAVATION (N) | STRUCTURE NAME SEE STRUCTURE PLANS | COMMENTS | Loc |
|---|---|---|---|---|---|---|---|---|---|---|---|---|---|---|---|---|---|
| | | | | LF | EA | EA | LF | LF | LF | TON | SQYD | SQYD | TON | TON | | | |
| 47 | 12.90 | 12.97 | NB | 363 | | 1 | | | | | | 121 | | | | | 47 |
| 48 | 12.90 | 13.15 | SB | 1100 | | 1 | | | | | | 367 | | | | | 48 |
| 49 | 12.99 | 13.17 | NB | 900 | 3 | 2 | 100 | 100 | | 1.47 | | 300 | | | | | 49 |
| 50 | 13.31 | 13.53 | NB | 1200 | 2 | 4 | 25 | 25 | | 0.37 | | 400 | | | | | 50 |
| 51 | 13.48 | 13.53 | SB | 300 | 2 | 2 | 25 | 25 | | 0.37 | | 100 | | | | | 51 |
| 52 | 13.61 | 13.65 | NB | 187.5 | 2 | 1 | | | | | | 69 | | | | | 52 |
| 53 | 13.62 | 13.65 | SB | 125 | 2 | 1 | 25 | 25 | | 0.37 | | 48 | | | | | 53 |
| 54 | 13.68 | 13.97 | NB | 1450 | | 4 | | | | | | 483 | | | | | 54 |
| 55 | 13.71 | 13.75 | SB | 250 | 2 | | 25 | 25 | | 0.37 | | 90 | | | | | 55 |
| 56 | 13.80 | 13.83 | SB | 137.5 | 3 | | | | | | | 53 | | | | | 56 |
| 57 | 13.88 | 13.91 | SB | 187.5 | 3 | | | | | | | 63 | | | | | 57 |
| 58 | 14.06 | 14.31 | SB | 1437.5 | 3 | 1 | | | | | | 442 | | | DEAN CREEK #04-0006 | | 58 |
| 59 | 14.08 | 14.38 | NB | 1100 | 3 | | 100 | 100 | | 1.47 | | 365 | | | OFF-RAMP TO DEAN CREEK #04-0006S | OFF-RAMP R† | 59 |
| 60 | 14.09 | 14.31 | NB | 1225 | 3 | 2 | 100 | 100 | | 1.47 | | 402 | | | DEAN CREEK #04-0006 | | 60 |
| 61 | 14.30 | 14.31 | NB | 50 | 2 | | | | | | | 10 | | | DEAN CREEK #04-0006S | OFF-RAMP L† | 61 |
| 62 | 14.38 | 14.44 | NB | 300 | 5 | 2 | 25 | 25 | | 0.37 | | 100 | | | DEAN CREEK #04-0006 | | 62 |
| 63 | 14.38 | 14.46 | SB | 437.5 | 7 | | 100 | 100 | | 1.47 | | 185 | | | DEAN CREEK #04-0006 | EXTEND MBGR 100 FEET NORTH | 63 |
| 64 | 14.38 | 15.02 | SB | 3250 | 10 | 3 | 450 | 450 | | 6.62 | | 1100 | | | DEAN CREEK #04-0006 | UNSTABLE AREA<br>EXTEND MBGR 50 FEET NORTH | 64 |
| 65 | 15.14 | 15.67 | SB | 2800 | 3 | 5 | | | | | | 933 | | | DEAN CREEK #04-0006 | | 65 |
| 66 | 15.73 | 16.01 | SB | 1500 | 4 | 4 | | | | | | 483 | 0.25 | | REDWAY | UNDERGROUND UTILITIES, SEE UTILITY PLAN; EXTEND MBGR 50′ | 66 |
| 67 | 16.49 | 16.53 | NB | 213 | | | | | | | | 71 | | | HURLBUTT UC | STEEL PIPE ARCH CULVERT | 67 |
| 68 | 16.50 | 16.60 | SB | 225 | 1 | | | | | | | 75 | | | HURLBUTT UC | STEEL PIPE ARCH CULVERT | 68 |
| 69 | 16.93 | 17.04 | SB | 575 | | 2 | | | | | | 192 | | | | UNSTABLE AREA | 69 |
| SUBTOTAL SHEET Q-13 | | | | | 60 | 35 | 975 | 975 | | 14.35 | | 6452 | 0.25 | | | | |

(N): NOT A SEPARATE PAY ITEM, FOR INFORMATION ONLY.

## SUMMARY OF QUANTITIES
## Q-13

REVISED BY | DATE REVISED
BRENDA C. HARWELL | JUAN SALAS
CALCULATED-DESIGNED BY | CHECKED BY
FUNCTIONAL SUPERVISOR: L.R. ASHLEY

STATE OF CALIFORNIA - DEPARTMENT OF TRANSPORTATION
Caltrans DESIGN

\\sv01s01\PSESUBMIT\01_464001\146400pa013.dgn

LAST REVISION 06-25-09 | DATE PLOTTED => 23-SEP-2009 | TIME PLOTTED => 06:51

| Dist | COUNTY | ROUTE | POST MILES TOTAL PROJECT | SHEET No. | TOTAL SHEETS |
|---|---|---|---|---|---|
| 01 | Hum | 101 | T0.2/R126.0 | 30 | 72 |

REGISTERED CIVIL ENGINEER 6-26-09 DATE

9-21-09
PLANS APPROVAL DATE

REGISTERED PROFESSIONAL ENGINEER BRENDA HARWELL No. 64471 Exp. 6/30/11 CIVIL STATE OF CALIFORNIA

*THE STATE OF CALIFORNIA OR ITS OFFICERS OR AGENTS SHALL NOT BE RESPONSIBLE FOR THE ACCURACY OR COMPLETENESS OF SCANNED COPIES OF THIS PLAN SHEET.*

# ROADWAY QUANTITIES

| Loc | POST MILE FROM | POST MILE TO | DIRECTION | EXISTING LENGTH LF | MARKERS: GUARD RAILING DELINEATOR EA | MARKERS: RESET MARKER EA | AC DIKE: REMOVE AC DIKE LF | AC DIKE: PLACE HMA DIKE (TYPE F) LF | AC DIKE: PLACE HMA DIKE (TYPE C) LF | HMA (TYPE A) TON | PLACE HMA (Misc AREA) SQYD | WEED CONTROL MAT (FIBER) SQYD | IMPORTED MATERIAL (SHOULDER BACKING) TON | ROADWAY EXCAVATION (N) TON | STRUCTURE NAME SEE STRUCTURE PLANS | COMMENTS | Loc |
|---|---|---|---|---|---|---|---|---|---|---|---|---|---|---|---|---|---|
| 70 | 17.20 | 17.25 | NB | 250 | 4 | | | | | | | 90 | | | | UNSTABLE AREA | 70 |
| 71 | 17.88 | 17.89 | NB | 50 | 2 | 1 | | | | | | 17 | | | S FORK EEL RIVER B&S #04-0065 | RELOCATE SRT | 71 |
| 72 | 18.05 | 18.07 | SB | 112.5 | 3 | 1 | | | | | | 31 | | | S FORK EEL RIVER B&S #04-0065 | | 72 |
| 73 | 18.06 | 18.11 | NB | 250 | 3 | 1 | 125 | 125 | | 1.06 | | 83 | | | S FORK EEL RIVER B&S #04-0065 | UNSTABLE AREA | 73 |
| 74 | 18.24 | 18.43 | NB | 1012.5 | | 2 | | | | | | 344 | | | | | 74 |
| 75 | 18.33 | 18.41 | SB | 412.5 | 4 | | | | | | | 138 | | | | | 75 |
| 76 | 18.55 | 18.65 | NB | 300 | 3 | 1 | | | | | | 100 | | | | | 76 |
| 77 | 18.65 | 19.39 | NB | 3800 | | 7 | | | | | | 1273 | | | | | 77 |
| 78 | 19.63 | 19.70 | SB | 362.5 | 4 | 2 | | | | | | 121 | 0.25 | | DIMMICK Rd UC #04-0192 | | 78 |
| 79 | 19.68 | 19.70 | NB | 75 | 2 | 1 | | | | | | 30 | | | DIMMICK Rd UC #04-0192 | | 79 |
| 80 | 19.72 | 20.50 | NB | 4150 | | 10 | | | | | | 1321 | | | DIMMICK Rd UC #04-0192 | | 80 |
| 81 | 19.72 | 19.80 | SB | 412.5 | 4 | 1 | | | | | | 143 | 0.25 | | DIMMICK Rd UC #04-0192 | | 81 |
| 82 | 20.10 | 20.14 | SB | 200 | | 1 | | | | | | 73 | | | | | 82 |
| 83 | 21.81 | 21.85 | SB | 200 | | 1 | | | | | | 73 | | | | | 83 |
| 84 | 22.39 | 22.44 | SB | 250 | 3 | | | | | | | 83 | | | FRENCH Rd UC #01-0174 | | 84 |
| 85 | 22.40 | 22.40 | NB | 150 | 2 | | | | | | | 55 | | | FRENCH Rd UC #01-0174 | LEAVE SRT, REMOVE 25' OF MBGR | 85 |
| 86 | 22.45 | 22.47 | NB | 137.5 | | | | | | | | 53 | | | | OFF-RAMP | 86 |
| 87 | 22.45 | 22.47 | SB | 100 | 2 | | | | | | | 33 | | | FRENCH Rd UC #01-0174 | | 87 |
| 88 | 22.45 | 22.47 | NB | 187.5 | 2 | | 100 | 100 | | 0.85 | | 63 | | | FRENCH Rd UC #01-0174 | | 88 |
| 89 | 22.76 | 22.85 | SB | 462.5 | 4 | 1 | | | | | | 154 | | | | | 89 |
| 90 | 23.00 | 23.01 | NB | 50 | 2 | 2 | | | | | | 15 | | | BEAR BUTTES Rd UC #04-0175 | | 90 |
| 91 | 23.00 | 23.02 | SB | 112.5 | 2 | 3 | | | | | | 38 | | | BEAR BUTTES Rd UC #04-0175 | | 91 |
| 92 | 23.03 | 23.04 | NB | 62.5 | 2 | | | | | | | 21 | | | BEAR BUTTES Rd UC #04-0175 | | 92 |
| SUBTOTAL SHEET Q-14 | | | | | 48 | 35 | 225 | 225 | | 1.91 | | 4352 | 0.5 | | | | |

(N): NOT A SEPARATE PAY ITEM, FOR INFORMATION ONLY.

## SUMMARY OF QUANTITIES
## Q-14

REVISED BY | DATE REVISED
BRENDA C. HARWELL | JUAN SALAS
CALCULATED-DESIGNED BY | CHECKED BY
FUNCTIONAL SUPERVISOR: L.R. ASHLEY

STATE OF CALIFORNIA - DEPARTMENT OF TRANSPORTATION
Caltrans
DESIGN

\\sv01s01\PSESUBMIT\01_464001\146400pa014.dgn

LAST REVISION | DATE PLOTTED => 23-SEP-2009 | TIME PLOTTED => 06:51
06-25-09

| Dist | COUNTY | ROUTE | POST MILES TOTAL PROJECT | SHEET No. | TOTAL SHEETS |
|---|---|---|---|---|---|
| 01 | Hum | 101 | T0.2/R126.0 | 31 | 72 |

REGISTERED CIVIL ENGINEER 6-26-09 DATE

9-21-09
PLANS APPROVAL DATE

REGISTERED PROFESSIONAL ENGINEER BRENDA HARWELL No. 64471 Exp. 6/30/11 CIVIL STATE OF CALIFORNIA

*THE STATE OF CALIFORNIA OR ITS OFFICERS OR AGENTS SHALL NOT BE RESPONSIBLE FOR THE ACCURACY OR COMPLETENESS OF SCANNED COPIES OF THIS PLAN SHEET.*

# ROADWAY QUANTITIES

| Loc | POST MILE FROM | POST MILE TO | DIRECTION | EXISTING LENGTH | MARKERS: GUARD RAILING DELINEATOR | MARKERS: RESET MARKER | AC DIKE: REMOVE AC DIKE | AC DIKE: PLACE HMA DIKE (TYPE F) | AC DIKE: PLACE HMA DIKE (TYPE C) | HMA (TYPE A) | PLACE HMA (Misc AREA) | WEED CONTROL MAT (FIBER) | IMPORTED MATERIAL (SHOULDER BACKING) | ROADWAY EXCAVATION (N) | STRUCTURE NAME SEE STRUCTURE PLANS | COMMENTS | Loc |
|---|---|---|---|---|---|---|---|---|---|---|---|---|---|---|---|---|---|
| | | | | LF | EA | EA | LF | LF | LF | TON | SQYD | SQYD | TON | TON | | | |
| 93 | 23.04 | 23.06 | SB | 125 | 2 | 1 | | | | | | 47 | | | BEAR BUTTES Rd UC #04-0175 | | 93 |
| 94 | 23.49 | 23.89 | NB | 2113.5 | 16 | 4 | 1150 | | | | | 704 | | | SALMON CREEK #01-0176 | REMOVE DIKE; DO NOT REPLACE | 94 |
| 95 | 23.53 | 23.89 | SB | 1900 | 14 | 1 | 730 | | | | | 458 | | | | | 95 |
| 96 | 23.87 | 23.89 | SB | 112.5 | 2 | | | | | | | 38 | | | SALMON CREEK #01-0176 | | 96 |
| 97 | 23.94 | 24.84 | NB | 3162.5 | 42 | 11 | 3163 | | | | | 1583 | | | SALMON CREEK #01-0176 | REMOVE DIKE; DO NOT REPLACE | 97 |
| 98 | 23.94 | 23.98 | SB | 200 | 2 | | | | | | | 67 | | | SALMON CREEK #01-0176 | | 98 |
| 99 | 24.34 | 24.76 | SB | 2200 | 16 | 4 | 2000 | 2000 | | 29.40 | | 740 | | | | | 99 |
| 100 | 25.00 | 25.01 | NB | 87.5 | 2 | 1 | | | | | | 29 | | | SALMON CREEK RD OC | | 100 |
| 101 | 25.00 | 25.01 | SB | 87.5 | 2 | 1 | | | | | | 29 | | | SALMON CREEK RD OC | | 101 |
| 102 | 25.19 | 25.62 | NB | 2300 | 20 | 10 | 475 | 475 | 37.5 | 7.30 | | 773 | | | | | 102 |
| 103 | 25.79 | 26.48 | NB | 3700 | | 10 | | | | | | 1246 | | | | | 103 |
| 104 | 27.06 | 27.07 | NB | 75 | | 1 | | | | | | 18 | | | EAGLE POINT VIADUCT #04-0072 | | 104 |
| 105 | 27.08 | 27.09 | SB | 62.5 | | 2 | | | | | | | | | EAGLE POINT VIADUCT #04-0072 | POSTS IN CONCRETE | 105 |
| 106 | 27.32 | 27.33 | SB | 50 | | 2 | | | | | | 10 | | | EAGLE POINT VIADUCT #04-0072 | RELOCATE BPA TO FIT NEW ANCHOR BLOCK | 106 |
| 107 | 27.35 | 27.61 | NB | 1400 | 12 | 3 | 175 | 175 | | 2.57 | | 467 | | | EAGLE POINT VIADUCT #04-0072 | | 107 |
| 108 | 27.69 | 27.72 | SB | 187.5 | 2 | 1 | | | | | | 63 | | | S FORK EEL RIVER #04-123 | | 108 |
| 109 | 27.70 | 27.71 | NB | 62.5 | 1 | 1 | 63 | 63 | | 0.93 | | 26 | | | S FORK EEL RIVER #04-123 | BRASS PLAQUE ON Br RAIL | 109 |
| 110 | 27.87 | 27.92 | NB | 225 | 2 | 2 | 225 | 225 | | 3.31 | | 74 | | | MYERS FLAT SEPARATION #04-0124 | FROM S FORK EEL RIVER | 110 |
| 111 | 27.87 | 27.93 | SB | 300 | 3 | 2 | | | | | | 87 | | | MYERS FLAT SEPARATION #04-0124 | FROM S FORK EEL RIVER | 111 |
| 112 | 27.94 | 27.95 | NB | 62.5 | 2 | | | | | | | 21 | | | MYERS FLAT SEPARATION #04-0124 | | 112 |
| 113 | 27.95 | 27.96 | SB | 50 | 2 | 1 | | | | | | | | | MYERS FLAT SEPARATION #04-0124 | | 113 |
| 114 | 40.61 | 40.84 | NB | 1212.5 | 16 | 2 | 1213 | 1213 | | 17.83 | | 404 | | | | REDCREST UC | 114 |
| 115 | 40.61 | 40.74 | SB | 687.5 | 13 | 2 | 656 | 656 | 37.5 | 9.96 | | 229 | | | | HAND EXCAVATE MBGR POST HOLES/CIDH POST HOLES | 115 |
| SUBTOTAL SHEET Q-15 | | | | | 169 | 62 | 9850 | 4807 | 75.0 | 71.31 | | 7113 | | | | | |

(N): NOT A SEPARATE PAY ITEM, FOR INFORMATION ONLY.

## SUMMARY OF QUANTITIES
## Q-15

REVISED BY | DATE REVISED

BRENDA C. HARWELL | JUAN SALAS

CALCULATED-DESIGNED BY | CHECKED BY

FUNCTIONAL SUPERVISOR: L.R. ASHLEY

STATE OF CALIFORNIA - DEPARTMENT OF TRANSPORTATION
Caltrans
DESIGN

\\sv01s01\PSESUBMIT\01_464001\146400pa015.dgn

LAST REVISION 06-25-09 | DATE PLOTTED => 23-SEP-2009 | TIME PLOTTED => 06:52

| Dist | COUNTY | ROUTE | POST MILES TOTAL PROJECT | SHEET No. | TOTAL SHEETS |
|---|---|---|---|---|---|
| 01 | Hum | 101 | T0.2/R126.0 | 32 | 72 |

REGISTERED CIVIL ENGINEER 6-26-09 DATE

9-21-09
PLANS APPROVAL DATE

REGISTERED PROFESSIONAL ENGINEER BRENDA HARWELL No. 64471 Exp. 6/30/11 CIVIL STATE OF CALIFORNIA

*THE STATE OF CALIFORNIA OR ITS OFFICERS OR AGENTS SHALL NOT BE RESPONSIBLE FOR THE ACCURACY OR COMPLETENESS OF SCANNED COPIES OF THIS PLAN SHEET.*

# ROADWAY QUANTITIES

| Loc | POST MILE FROM | POST MILE TO | DIRECTION | EXISTING LENGTH | MARKERS: GUARD RAILING DELINEATOR | MARKERS: RESET MARKER | AC DIKE: REMOVE AC DIKE | AC DIKE: PLACE HMA DIKE (TYPE F) | AC DIKE: PLACE HMA DIKE (TYPE C) | HMA (TYPE A) | PLACE HMA (Misc AREA) | WEED CONTROL MAT (FIBER) | IMPORTED MATERIAL (SHOULDER BACKING) | ROADWAY EXCAVATION (N) | STRUCTURE NAME SEE STRUCTURE PLANS | COMMENTS | Loc |
|---|---|---|---|---|---|---|---|---|---|---|---|---|---|---|---|---|---|
| | | | | LF | EA | EA | LF | LF | LF | TON | SQYD | SQYD | TON | TON | | | |
| 116 | 41.20 | 41.35 | NB | 637.5 | 12 | 3 | 350 | 313 | 37.5 | 4.60 | | 219 | | | | | 116 |
| 117 | 41.40 | 41.60 | NB | 875 | | | | | | | | | | | | | 117 |
| 118 | 41.70 | 41.90 | NB | 587.5 | 15 | 3 | 263 | 263 | | 3.87 | | 300 | | | | | 118 |
| 119 | 41.75 | 41.86 | SB | 575 | 11 | 3 | | | | | | 192 | | | | | 119 |
| 120 | 41.98 | 42.16 | NB | 950 | 13 | 3 | 613 | 576 | 37.5 | 8.79 | | 323 | | | | | 120 |
| 121 | 42.33 | 42.70 | NB | 1900 | 34 | 5 | 1838 | 1838 | | 27.02 | | 633 | | | | | 121 |
| 122 | 42.73 | 42.99 | NB | 1375 | 20 | 5 | 1200 | 1163 | 37.5 | 17.42 | | 464 | | | BEAR CREEK #04-0199 | | 122 |
| 123 | 42.98 | 42.99 | SB | 62.5 | 2 | 1 | | | | | | 21 | | | BEAR CREEK #04-0199 | HAND EXCAVATE MBGR POST HOLES | 123 |
| 124 | 43.03 | 43.31 | NB | 1375 | 34 | 3 | 431 | 431 | | 6.34 | | 458 | | | BEAR CREEK #04-0199 | CONTINUES TO BARKDULL NB OFF EXISTING TRAILER NON-STANDARD | 124 |
| 125 | 43.03 | 43.05 | SB | 100 | 2 | 1 | 100 | 63 | 37.5 | 1.25 | | 39 | | | BEAR CREEK #04-0199 | | 125 |
| 126 | 43.28 | 43.32 | NB | 200 | 4 | 1 | | | | | | 65 | | | BARKDULL Rd UC #04-0200 | | 126 |
| 127 | 43.28 | 43.32 | SB | 200 | 5 | 1 | | | | | | 67 | | | BARKDULL Rd UC #04-0200 | | 127 |
| 128 | 43.30 | 43.33 | NB | 612.5 | 8 | | 113 | 113 | | 1.66 | | 211 | | | | NB ON-RAMP | 128 |
| 129 | 43.34 | 43.40 | NB | 312.5 | 7 | | | | | | | 104 | | | BARKDULL Rd UC #04-0200 | NB ON-RAMP | 129 |
| 130 | 43.34 | 43.38 | SB | 200 | 6 | 1 | 121 | 121 | | 1.78 | | 65 | | | BARKDULL Rd UC #04-0200 | | 130 |
| 131 | 43.35 | 43.69 | SB | 1775 | 26 | 7 | 1669 | 1632 | 37.5 | 24.31 | | 598 | | | | SB ON-RAMP | 131 |
| 132 | 43.41 | 43.67 | NB | 1400 | 24 | 2 | 281 | 281 | | 4.13 | | 473 | | | | NB ON-RAMP | 132 |
| 133 | 44.15 | 44.55 | SB | 1775 | 34 | 6 | 1612 | 1612 | | 23.70 | | 592 | | | | | 133 |
| 134 | 44.20 | 44.48 | NB | 1675 | 18 | 2 | 281 | 281 | | 4.31 | | 564 | | | | | 134 |
| 135 | 44.77 | 45.01 | NB | 1262.5 | 8 | 2 | 377 | 340 | 37.5 | 5.32 | | 411 | | | | | 135 |
| 136 | 45.05 | 45.23 | NB | 962.5 | 12 | | 400 | 400 | | 5.88 | | 328 | | | | | 136 |
| 137 | 45.41 | 45.57 | SB | 812.5 | 16 | | | | | | | 271 | | | GREENLAW CREEK #04-0206 | | 137 |
| 138 | 45.56 | 45.57 | NB | 62.5 | 2 | | | | | | | 26 | | | GREENLAW CREEK #04-0206 | | 138 |
| SUBTOTAL SHEET Q-16 | | | | | 313 | 50 | 9649 | 9424 | 225 | 140.18 | | 6424 | | | | | |

(N): NOT A SEPARATE PAY ITEM, FOR INFORMATION ONLY.

## SUMMARY OF QUANTITIES
## Q-16

REVISED BY | DATE REVISED
BRENDA C. HARWELL | JUAN SALAS
CALCULATED-DESIGNED BY | CHECKED BY
FUNCTIONAL SUPERVISOR: L.R. ASHLEY
STATE OF CALIFORNIA - DEPARTMENT OF TRANSPORTATION
Caltrans
DESIGN

\\sv01s01\PSESUBMIT\01_464001\146400pa016.dgn

LAST REVISION 06-25-09 | DATE PLOTTED => 23-SEP-2009 | TIME PLOTTED => 06:52

| Dist | COUNTY | ROUTE | POST MILES TOTAL PROJECT | SHEET No. | TOTAL SHEETS |
|---|---|---|---|---|---|
| 01 | Hum | 101 | T0.2/R126.0 | 33 | 72 |

REGISTERED CIVIL ENGINEER 6-26-09 DATE

9-21-09
PLANS APPROVAL DATE

REGISTERED PROFESSIONAL ENGINEER BRENDA HARWELL No. 64471 Exp. 6/30/11 CIVIL STATE OF CALIFORNIA

*THE STATE OF CALIFORNIA OR ITS OFFICERS OR AGENTS SHALL NOT BE RESPONSIBLE FOR THE ACCURACY OR COMPLETENESS OF SCANNED COPIES OF THIS PLAN SHEET.*

# ROADWAY QUANTITIES

| Loc | POST MILE FROM | POST MILE TO | DIRECTION | EXISTING LENGTH | MARKERS: GUARD RAILING DELINEATOR | MARKERS: RESET MARKER | AC DIKE: REMOVE AC DIKE | AC DIKE: PLACE HMA DIKE (TYPE F) | AC DIKE: PLACE HMA DIKE (TYPE C) | HMA (TYPE A) | PLACE HMA (Misc AREA) | WEED CONTROL MAT (FIBER) | IMPORTED MATERIAL (SHOULDER BACKING) | ROADWAY EXCAVATION (N) | STRUCTURE NAME SEE STRUCTURE PLANS | COMMENTS | Loc |
|---|---|---|---|---|---|---|---|---|---|---|---|---|---|---|---|---|---|
| | | | | LF | EA | EA | LF | LF | LF | TON | SQYD | SQYD | TON | TON | | | |
| 139 | 45.59 | 45.61 | SB | 112.5 | 2 | | | | | | | 36 | | | GREENLAW CREEK #04-0206 | | 139 |
| 140 | 45.89 | 45.90 | NB | 62.5 | 2 | 1 | 63 | 63 | | 0.93 | | 26 | | | JORDAN Rd Sep #04-0207 | RELOCATE OSD | 140 |
| 141 | 45.92 | 45.99 | NB | 350 | 8 | 2 | | | | | | 117 | | | JORDAN Rd Sep #04-0207 | 10" OSD | 141 |
| 142 | 45.92 | 45.93 | SB | 62.5 | 2 | | | | | | | 26 | | | JORDAN Rd Sep #04-0207 | | 142 |
| 143 | 45.94 | 46.19 | NB | 1312.5 | 30 | 4 | 1296 | 1246 | 50 | 18.74 | | 438 | 0.2 | | JORDAN CREEK #04-0208L, #04-0208R | CIDH POSTS; ON-RAMP TO JORDAN Cr Br | 143 |
| 144 | 45.97 | 46.18 | SB-RT | 987.5 | 16 | 2 | | | | | | 329 | | | JORDAN CREEK #04-0208L, #04-0208R | TO SB OFF-RAMP | 144 |
| 145 | 46.15 | 46.18 | SB-LT | 150 | 2 | | 120 | 120 | | 1.76 | | 50 | 0.2 | | JORDAN CREEK #04-0208L, #04-0208R | PILE OF ROCKS AT END OF Br AC GRINDINGS | 145 |
| 146 | 46.14 | 46.19 | NB-LT | 250 | 4 | | | | | | | 82 | | | JORDAN CREEK #04-0208L, #04-0208R | | 146 |
| 147 | 46.23 | 46.24 | SB-LT | 62.5 | 2 | | 63 | 63 | | 0.93 | | 20 | | | JORDAN CREEK #04-0208L, #04-0208R | | 147 |
| 148 | 46.23 | 46.24 | SB-RT | 62.5 | 2 | | 56 | 56 | | 0.82 | 2.0 | 20 | | | JORDAN CREEK #04-0208L, #04-0208R | RELOCATE SRT; POSTS IN AC (12') | 148 |
| 149 | 46.27 | 46.36 | NB-LT | 475 | 9 | | | | | | | 158 | | | JORDAN CREEK #04-0208L, #04-0208R | | 149 |
| 150 | 46.27 | 46.36 | NB-RT | 462.5 | 9 | | 34 | 34 | | 0.50 | | 154 | | | JORDAN CREEK #04-0208L, #04-0208R | | 150 |
| 151 | 46.39 | 46.50 | SB-LT | 1100 | 15 | 4 | 200 | 200 | | 2.94 | | 367 | 0.2 | | | HEIGHT OK; (2) NEW BPA RECONSTRUCT 100' N & S | 151 |
| 152 | 46.42 | 47.21 | NB-RT | 4000 | 58 | 5 | | | | | | 1340 | 0.2 | | | HEIGHT OK FOR 3000' (POSTS IN AC) ADD 25' LEADING END,NEST RAIL | 152 |
| 153 | 46.82 | 46.94 | SB-LT | 637.5 | 5 | 2 | | | | | | 175 | | | | AC GRINDINGS BEHIND RAIL | 153 |
| 154 | 46.97 | 47.20 | SB-LT | 1212.5 | 12 | 5 | | | | | | 411 | | | | AC GRINDINGS BEHIND RAIL | 154 |
| 155 | 47.23 | 47.40 | SB-LT | 875 | 8 | 1 | | | | | | 298 | 0.2 | | | BURIED POST AT TRAILER; ADD SHOULDER BACKING BEHIND AF | 155 |
| 156 | 47.90 | 47.95 | NB | 287.5 | 4 | | | | | | | 95 | | | STAFFORD Rd UC #04-0205 | | 156 |
| 157 | 47.97 | 48.04 | SB | 350 | 5 | 2 | | | | | | 115 | | | STAFFORD Rd UC #04-0205 | DIKE (75') OSD (1,RESET) | 157 |
| 158 | 48.00 | 48.28 | NB | 1425 | 4 | 1 | 100 | 100 | | 1.47 | | 474 | | | EEL RIVER Br & OH 04-0014 | | 158 |
| 159 | 48.01 | 42.28 | SB | 1475 | 20 | | | | | | | 490 | | | EEL RIVER Br & OH 04-0014 | RECONSTRUCT 500' NORTHERLY END; SOUTHERLY OK; Conc BLOCK = 4' | 159 |
| 160 | 60.48 | 60.50 | NB | 62.5 | 2 | 2 | | | | | | 18 | | | TWELFTH STREET OC #04-0130 | BELOW OC; | 160 |
| 161 | 60.48 | 60.50 | SB | 50 | 3 | 3 | | | | | | 14 | | | TWELFTH STREET OC #04-0130 | BELOW OC; POSTS IN Conc | 161 |
| SUBTOTAL SHEET Q-17 | | | | | 224 | 34 | 1932 | 1882 | 50 | 28.09 | 2.0 | 5253 | 1.0 | | | | |

(N): NOT A SEPARATE PAY ITEM, FOR INFORMATION ONLY.

# SUMMARY OF QUANTITIES
## Q-17

REVISED BY | DATE REVISED
BRENDA C. HARWELL | JUAN SALAS
CALCULATED-DESIGNED BY | CHECKED BY
FUNCTIONAL SUPERVISOR: L.R. ASHLEY
STATE OF CALIFORNIA - DEPARTMENT OF TRANSPORTATION
Caltrans
DESIGN

\\sv01s01\PSESUBMITX01_464001\146400pa017.dgn

LAST REVISION 06-25-09 | DATE PLOTTED => 23-SEP-2009 | TIME PLOTTED => 06:52

| Dist | COUNTY | ROUTE | POST MILES TOTAL PROJECT | SHEET No. | TOTAL SHEETS |
|---|---|---|---|---|---|
| 01 | Hum | 101 | T0.2/R126.0 | 34 | 72 |

REGISTERED CIVIL ENGINEER 6-26-09 DATE

9-21-09
PLANS APPROVAL DATE

REGISTERED PROFESSIONAL ENGINEER BRENDA HARWELL No. 64471 Exp. 6/30/11 CIVIL STATE OF CALIFORNIA

*THE STATE OF CALIFORNIA OR ITS OFFICERS OR AGENTS SHALL NOT BE RESPONSIBLE FOR THE ACCURACY OR COMPLETENESS OF SCANNED COPIES OF THIS PLAN SHEET.*

# ROADWAY QUANTITIES

| Loc | POST MILE FROM | POST MILE TO | DIRECTION | EXISTING LENGTH LF | MARKERS: GUARD RAILING DELINEATOR EA | MARKERS: RESET MARKER EA | AC DIKE: REMOVE AC DIKE LF | AC DIKE: PLACE HMA DIKE (TYPE F) LF | AC DIKE: PLACE HMA DIKE (TYPE C) LF | HMA (TYPE A) TON | PLACE HMA (Misc AREA) SQYD | WEED CONTROL MAT (FIBER) SQYD | IMPORTED MATERIAL (SHOULDER BACKING) TON | ROADWAY EXCAVATION (N) TON | STRUCTURE NAME SEE STRUCTURE PLANS | COMMENTS | Loc |
|---|---|---|---|---|---|---|---|---|---|---|---|---|---|---|---|---|---|
| 162 | 60.65 | 60.67 | NB | 87.5 | 2 | 1 | | | | | | 35 | | | ROHNER CREEK #04-0108 | | 162 |
| 163 | 60.68 | 60.69 | SB | 75 | 2 | | | | | | | 30 | | | ROHNER CREEK #04-0108 | RELOCATE SRT | 163 |
| 164 | 61.35 | 61.53 | SB | 937.5 | | 2 | | | | | | 313 | | | FORTUNA OH #04-0145 | HEIGHT OK. Adj POSTS | 164 |
| 165 | 61.50 | 62.52 | NB | 87.5 | 2 | 2 | | | | | | | | | FORTUNA OH #04-0145 | PAVED; RELOCATE SRT | 165 |
| 166 | 61.62 | 61.70 | NB | 425 | 7 | 2 | | | | | | 142 | | | FORTUNA OH #04-0145 | HEIGHT OK. 66' POSTS IN Conc | 166 |
| 167 | 61.62 | 61.64 | SB | 162.5 | 3 | | | | | | | 41 | | | FORTUNA OH #04-0145 | | 167 |
| 168 | 62.21 | 62.23 | NB | 62.5 | 3 | 1 | | | | | | 19 | | | PALMER Blvd UC #04-0112 | CHANGE SRT TO AIL | 168 |
| 169 | 62.25 | 62.27 | SB | 62.56 | 3 | | 32 | 32 | | 0.47 | 3.0 | 19 | | | PALMER Blvd UC #04-0112 | Misc HMA; 25' POSTS IN AC | 169 |
| 170 | 63.07 | 63.09 | NB | 150 | 3 | 1 | | | | | | 48 | | | FINCH CREEK #04-0113 | | 170 |
| 171 | 63.11 | 63.13 | SB | 62.5 | 2 | | 63 | 63 | | 0.93 | | 19 | | | FINCH CREEK #04-0113 | Misc HMA; OSD (1) | 171 |
| 172 | 65.89 | 65.94 | SB | 325 | 4 | 1 | | | | | | 115 | | | LOLETA DRIVE OC | ON-RAMP; PRE-BEND ELEMENT; SHORTEN LEADER 12'; NEST RAIL | 172 |
| 173 | 65.90 | 65.94 | NB | 412.5 | 5 | 1 | | | | | 3.0 | 138 | | | LOLETA DRIVE OC | OFF-RAMP Misc HMA - DRAINAGE FLUME | 173 |
| 174 | 65.96 | 66.03 | SB | 400 | 6 | 1 | | | | | | 140 | | | LOLETA DRIVE OC | OFF-RAMP | 174 |
| 175 | 65.98 | 66.00 | NB | 112.5 | 2 | 1 | | | | | | 44 | | | LOLETA DRIVE OC | ON-RAMP | 175 |
| 176 | 70.02 | 70.11 | NB | 500 | 5 | 1 | | | | | | 167 | | | | | 176 |
| 177 | 70.35 | 70.61 | SB | 1475 | | | | | | | | 492 | | | TOMPKINS HILL Rd OH | | 177 |
| 178 | 70.79 | 70.87 | SB | 513 | 8 | | | | | | | 178 | | | TOMPKINS HILL Rd OH | SB OFF NEST RAIL FOR DRAINAGE | 178 |
| 179 | 71.25 | 71.46 | SB | 1175 | 3 | | | | | | | 392 | | | | HEIGHT OK. REPLACE TRAILER | 179 |
| 180 | 72.01 | 72.03 | NB | 75 | 2 | | | | | | | 24 | | | ORCHARD Ave UC #04-0122 | FIELDS LANDING | 180 |
| 181 | 72.04 | 72.06 | SB | 75 | 2 | | | | | | | 24 | | | ORCHARD Ave UC #04-0122 | FIELDS LANDING HINGE POINT - USE AIL | 181 |
| 182 | 72.39 | 72.62 | SB | 1225 | | 1 | | | | | | 415 | | | | HEIGHT OK. DAMAGED SRT REPLACE LEADER (AF) | 182 |
| 183 | 72.87 | 72.88 | NB | 75 | 2 | 1 | | | | | | 24 | | | KING SALMON Ave UC #04-0067L & #04-0067R | NEW AIL | 183 |
| 184 | 72.87 | 72.88 | Med | 75 | 2 | | | | | | | 24 | | | KING SALMON Ave UC #04-0067L & #04-0067R | NB Med | 184 |
| SUBTOTAL SHEET Q-18 | | | | | 68 | 16 | 95 | 95 | | 1.40 | 6.0 | 2843 | | | | | |

(N): NOT A SEPARATE PAY ITEM, FOR INFORMATION ONLY.

## SUMMARY OF QUANTITIES
## Q-18

REVISED BY | DATE REVISED

BRENDA C. HARWELL | JUAN SALAS

CALCULATED-DESIGNED BY | CHECKED BY

FUNCTIONAL SUPERVISOR: L.R. ASHLEY

STATE OF CALIFORNIA - DEPARTMENT OF TRANSPORTATION

Caltrans DESIGN

\\sv01s01\PSESUBMIT\01_464001\146400pa018.dgn

LAST REVISION 06-25-09 | DATE PLOTTED => 23-SEP-2009 | TIME PLOTTED => 06:52

| Dist | COUNTY | ROUTE | POST MILES TOTAL PROJECT | SHEET No. | TOTAL SHEETS |
|---|---|---|---|---|---|
| 01 | Hum | 101 | T0.2/R126.0 | 35 | 72 |

REGISTERED CIVIL ENGINEER 6-26-09 DATE

9-21-09
PLANS APPROVAL DATE

REGISTERED PROFESSIONAL ENGINEER BRENDA HARWELL No. 64471 Exp. 6/30/11 CIVIL STATE OF CALIFORNIA

*THE STATE OF CALIFORNIA OR ITS OFFICERS OR AGENTS SHALL NOT BE RESPONSIBLE FOR THE ACCURACY OR COMPLETENESS OF SCANNED COPIES OF THIS PLAN SHEET.*

# ROADWAY QUANTITIES

| Loc | POST MILE FROM | POST MILE TO | DIRECTION | EXISTING LENGTH | MARKERS: GUARD RAILING DELINEATOR | MARKERS: RESET MARKER | AC DIKE: REMOVE AC DIKE | AC DIKE: PLACE HMA DIKE (TYPE F) | AC DIKE: PLACE HMA DIKE (TYPE C) | HMA (TYPE A) | PLACE HMA (Misc AREA) | WEED CONTROL MAT (FIBER) | IMPORTED MATERIAL (SHOULDER BACKING) | ROADWAY EXCAVATION (N) | STRUCTURE NAME SEE STRUCTURE PLANS | COMMENTS | Loc |
|---|---|---|---|---|---|---|---|---|---|---|---|---|---|---|---|---|---|
| | | | | LF | EA | EA | LF | LF | LF | TON | SQYD | SQYD | TON | TON | | | |
| 185 | 72.90 | 72.91 | SB | 75 | 2 | | | | | | | 30 | | | KING SALMON Ave UC #04-0067L & #04-0067R | | 185 |
| 186 | 72.90 | 72.91 | Med | 75 | 2 | 1 | | | | | | 24 | | | KING SALMON Ave UC #04-0067L & #04-0067R | SB Med | 186 |
| 187 | 73.72 | 73.84 | NB | 6035 | 8 | 1 | | | | | | | | | SPRUCE POINT OC #04-0071 | | 187 |
| 188 | 73.72 | 73.84 | SB | 62.5 | | | | | | | | | | | SPRUCE POINT OC #04-0071 | REMOVE DIRT UNDER MBGR<br>CT UTILITY VAULT | 188 |
| 189 | 113.50 | 113.61 | SB | 575 | 5 | 3 | | | | | | 198 | | | | | 189 |
| 190 | 114.09 | 114.28 | SB | 1000 | 9 | | 250 | 250 | | 3.68 | | 340 | | | | DIKE; OSD | 190 |
| 191 | 115.51 | 115.55 | SB | 200 | 5 | | 25 | 25 | | 0.37 | 3.0 | 80 | | | | DIKE; OSD; VERIZON UTILITIES<br>RAISE HMA 10:1TAPER | 191 |
| 192 | 116.35 | 116.42 | SB | 350 | 6 | | | | | | | 117 | | | | | 192 |
| 193 | 120.01 | 120.02 | NB | 75 | 3 | | | | | | | 30 | | | REDWOOD CREEK OVERFLOW #04-0034 | PRE-BEND ELEMENT<br>Conc Block = 5' | 193 |
| 194 | 120.01 | 120.02 | SB | 62.5 | 2 | | | | | | | | | | REDWOOD CREEK OVERFLOW #04-0034 | PAVED | 194 |
| 195 | 120.03 | 120.04 | NB | 62.5 | 2 | | | | | 1.2 | 3.0 | | | | REDWOOD CREEK OVERFLOW #04-0034 | PAVED<br>RAISE HMA TO 10:1 TAPER | 195 |
| 196 | 120.03 | 120.04 | SB | 62.5 | 2 | | | | | | | | | | REDWOOD CREEK OVERFLOW #04-0034 | PAVED | 196 |
| 197 | 121.08 | 121.09 | NB | 62.5 | 2 | | | | | | | 24 | | | REDWOOD CREEK #04-0028 | | 197 |
| 198 | 121.08 | 121.09 | SB | 62.5 | 2 | | | | | | | | | | REDWOOD CREEK #04-0028 | PAVED | 198 |
| 199 | 121.21 | 121.22 | NB | 62.5 | 2 | | | | | | | | | | REDWOOD CREEK #04-0028 | PAVED<br>REMOVE DIKE IN FRONT OF MBGR | 199 |
| 200 | 121.21 | 121.22 | SB | 62.5 | 2 | | | | | | | | | | REDWOOD CREEK #04-0028 | PAVED | 200 |
| 201 | 122.85 | 122.86 | NB | 62.5 | 2 | | | | | | | 19 | | | PRAIRIE CREEK #04-0029 | | 201 |
| 202 | 122.85 | 122.86 | SB | 62.5 | 2 | | | | | | | 21 | | | PRAIRIE CREEK #04-0029 | | 202 |
| 203 | 122.86 | 122.89 | NB | 62.5 | 2 | | | | | | | 19 | | | PRAIRIE CREEK #04-0029 | | 203 |
| 204 | 122.88 | 122.89 | SB | 62.5 | 2 | | | | | | | 21 | | | PRAIRIE CREEK #04-0029 | | 204 |
| 205 | 124.69 | 124.70 | NB | 62.5 | 2 | | | | | | | 26 | | | LOST MAN CREEK #04-0030 | | 205 |
| 206 | 124.69 | 124.70 | SB | 62.5 | 2 | 1 | | | | | | 21 | | | LOST MAN CREEK #04-0030 | | 206 |
| 207 | 124.71 | 124.72 | NB | 62.5 | 2 | | | | | | | 21 | | | LOST MAN CREEK #04-0030 | | 207 |
| SUBTOTAL SHEET Q-19 | | | | | 68 | 6 | 275 | 275 | | 5.24 | 6.0 | 991 | | | | | |

(N): NOT A SEPARATE PAY ITEM, FOR INFORMATION ONLY.

# SUMMARY OF QUANTITIES

Q-19

REVISED BY | DATE REVISED
BRENDA C. HARWELL | JUAN SALAS
CALCULATED-DESIGNED BY | CHECKED BY
FUNCTIONAL SUPERVISOR: L.R. ASHLEY

STATE OF CALIFORNIA - DEPARTMENT OF TRANSPORTATION
Caltrans
DESIGN

\\sv01s01\PSESUBMIT\01_464001\146400pa019.dgn

LAST REVISION 06-25-09 | DATE PLOTTED => 23-SEP-2009 | TIME PLOTTED => 06:52

| Dist | COUNTY | ROUTE | POST MILES TOTAL PROJECT | SHEET No. | TOTAL SHEETS |
|---|---|---|---|---|---|
| 01 | Hum | 101 | T0.2/R126.0 | 36 | 72 |

REGISTERED CIVIL ENGINEER 6-26-09 DATE

9-21-09
PLANS APPROVAL DATE

REGISTERED PROFESSIONAL ENGINEER BRENDA HARWELL No. 64471 Exp. 6/30/11 CIVIL STATE OF CALIFORNIA

*THE STATE OF CALIFORNIA OR ITS OFFICERS OR AGENTS SHALL NOT BE RESPONSIBLE FOR THE ACCURACY OR COMPLETENESS OF SCANNED COPIES OF THIS PLAN SHEET.*

# ROADWAY QUANTITIES

| Loc | POST MILE FROM | POST MILE TO | DIRECTION | EXISTING LENGTH | MARKERS: GUARD RAILING DELINEATOR | MARKERS: RESET MARKER | AC DIKE: REMOVE AC DIKE | AC DIKE: PLACE HMA DIKE (TYPE F) | AC DIKE: PLACE HMA DIKE (TYPE C) | HMA (TYPE A) | PLACE HMA (Misc AREA) | WEED CONTROL MAT (FIBER) | IMPORTED MATERIAL (SHOULDER BACKING) | ROADWAY EXCAVATION (N) | STRUCTURE NAME SEE STRUCTURE PLANS | COMMENTS | Loc |
|---|---|---|---|---|---|---|---|---|---|---|---|---|---|---|---|---|---|
| | | | | LF | EA | EA | LF | LF | LF | TON | SQYD | SQYD | TON | TON | | | |
| 208 | 124.71 | 124.72 | SB | 62.5 | 2 | | | | | | | 26 | | | LOST MAN CREEK #04-0030 | | 208 |
| 209 | 124.83 | 124.93 | SB | 525 | 9 | | | | | | | 182 | | 2 | | ADD 12' & AF REMOVE DIRT UNDER MBGR | 209 |
| 210 | 125.78 | 125.98 | SB | 1062.5 | 3 | 1 | | | | | | | | | | PAVED; Adj POSTS | 210 |
| TOTAL THIS SHEET | | | | | 14 | 1 | | | | | | 208 | | 2 | | | |
| SUBTOTAL SHEET Q-11 | | | | | 38 | 27 | 516 | 516 | 37.5 | 8.13 | 3.0 | 2015 | | 4 | | | |
| SUBTOTAL SHEET Q-12 | | | | | 145 | 20 | 6889 | 6833 | 75 | 100.66 | | 3779 | | | | | |
| SUBTOTAL SHEET Q-13 | | | | | 60 | 35 | 975 | 975 | | 14.35 | | 6452 | 0.25 | | | | |
| SUBTOTAL SHEET Q-14 | | | | | 48 | 35 | 225 | 225 | | 1.91 | | 4352 | 0.5 | | | | |
| SUBTOTAL SHEET Q-15 | | | | | 169 | 62 | 9850 | 4807 | 75 | 71.31 | | 7113 | | | | | |
| SUBTOTAL SHEET Q-16 | | | | | 313 | 50 | 9649 | 9424 | 225 | 140.18 | | 6424 | | | | | |
| SUBTOTAL SHEET Q-17 | | | | | 224 | 34 | 1932 | 1882 | 50 | 28.09 | 2 | 5253 | 1.0 | | | | |
| SUBTOTAL SHEET Q-18 | | | | | 68 | 16 | 95 | 95 | | 1.40 | 6.0 | 2843 | | | | | |
| SUBTOTAL SHEET Q-19 | | | | | 68 | 6 | 275 | 275 | | 5.24 | 6.0 | 991 | | | | | |
| FROM DRAINAGE QUANTITY SHEET | | | | | | | | | | 17.63 | 103.2 | | | | | | |
| TOTAL | | | | | 1147 | 286 | 30406 | 25032 | 462.5 | 388.90 | 120.2 | 39430 | 1.75 | 6 | | | |

REVISED BY | DATE REVISED
BRENDA C. HARWELL | JUAN SALAS
CALCULATED-DESIGNED BY | CHECKED BY
FUNCTIONAL SUPERVISOR: L.R. ASHLEY

STATE OF CALIFORNIA - DEPARTMENT OF TRANSPORTATION
Caltrans DESIGN

\\sv01s01\PSESUBMIT\01_464001\146400pa020.dgn

## SUMMARY OF QUANTITIES
## Q-20

LAST REVISION 06-25-09 | DATE PLOTTED => 23-SEP-2009 | TIME PLOTTED => 09:28

| Dist | COUNTY | ROUTE | POST MILES TOTAL PROJECT | SHEET No. | TOTAL SHEETS |
|---|---|---|---|---|---|
| 01 | Hum | 101 | T0.2/R126.0 | 37 | 72 |

REGISTERED CIVIL ENGINEER 6-26-09 DATE

9-21-09
PLANS APPROVAL DATE

REGISTERED PROFESSIONAL ENGINEER BRENDA HARWELL No. 64471 Exp. 6/30/11 CIVIL STATE OF CALIFORNIA

*THE STATE OF CALIFORNIA OR ITS OFFICERS OR AGENTS SHALL NOT BE RESPONSIBLE FOR THE ACCURACY OR COMPLETENESS OF SCANNED COPIES OF THIS PLAN SHEET.*

# STRUCTURE QUANTITIES

SEE STRUCTURE PLANS

| DESCRIPTION - RAIL TYPE | STRUCTURE NAME | NUMBER OF CONNECTIONS (N) | MINOR CONCRETE (MINOR STRUCTURE) CY | |
|---|---|---|---|---|
| TYPE 1 BARRIER TRANSITION BLOCK | DIMMICK ROAD UC | 2 | 2.14 | |
| | FRENCH ROAD UC | 2 | 2.14 | |
| | BEAR BUTTES ROAD UC | 2 | 1.46 | |
| | EEL RIVER BRIDGE & OH | 2 | 1.46 | |
| | BEAR CREEK | 2 | 1.46 | |
| | BARKDULL ROAD UC | 2 | 1.46 | |
| | GREENLAW CREEK | 2 | 1.46 | |
| | JORDAN ROAD SEPARATOR | 2 | 1.46 | |
| | JORDAN CREEK | 4 | 2.92 | |
| | STAFFORD ROAD UC | 2 | 1.46 | |
| | SOUTH FORK RIVER BRIDGE | 2 | 2.14 | |
| | ROHNER CREEK | 2 | 2.14 | |
| | ORCHARD AVENUE UC | 2 | 2.14 | |
| | KING SALMON AVENUE UC | 4 | 4.28 | |
| | DEAN CREEK OFF-RAMP (R+) | 1 | 0.73 | |
| | SUBTOTAL - TYPE 1 BARRIER TRANSITION BLOCK | | | 28.85 |
| TYPE 2 BARRIER TRANSITION BLOCK L = 20′ | DEAN CREEK OFF-RAMP (L+) | 1 | 6.55 | |
| | SOUTH FORK EEL RIVER BRIDGE B&S | 2 | 13.10 | |
| | SALMON CREEK | 2 | 13.10 | |
| | EAGLE POINT SIDEHILL VIADUCT | 2 | 13.10 | |
| | SUBTOTAL - TYPE 2 BARRIER TRANSITION BLOCK - L = 20′ | | | 45.85 |
| TYPE 2 BARRIER TRANSITION BLOCK L = 40′ | DEAN CREEK | 2 | 23.50 | |
| | MYERS FLAT SEPARATION | 2 | 23.50 | |
| | FORTUNA OH | 2 | 23.50 | |
| | SUBTOTAL - TYPE 2 BARRIER TRANSITION BLOCK - L = 40′ | | | 70.50 |
| TYPE 9 BARRIER TRANSITION BLOCK | OLD US 101 UC | 2 | 1.56 | |
| | SOUTH FORK EEL RIVER BRIDGE | 2 | 1.50 | |
| | SOUTH FORK EEL RIVER BRIDGE | 2 | 1.50 | |
| | BENBOW UC | 2 | 1.50 | |
| | EAST BRANCH S FORK EEL RIVER BRIDGE | 2 | 1.50 | |
| | SUBTOTAL - TYPE 9 BARRIER TRANSITION BLOCK | | | 7.56 |
| TYPE 25 BARRIER TRANSITION BLOCK | LOST MAN CREEK | 2 | 1.78 | |
| | SOUTH FORK EEL RIVER BRIDGE | 3 | 3.72 | |
| | REDWOOD CREEK OVERFLOW | 2 | 1.96 | |
| | PRAIRIE CREEK | 2 | 1.96 | |
| | SUBTOTAL - TYPE 25 BARRIER TRANSITION BLOCK | | | 9.42 |
| TYPE 27 BARRIER TRANSITION BLOCK | FINCH CREEK ROAD UC | 2 | 2.26 | |
| | PALMER Blvd UC | 2 | 2.26 | |
| | REDWOOD CREEK BRIDGE | 4 | 8.72 | |
| | SPRUCE POINT OC | 2 | 2.90 | |
| | 12th STREET OC | 2 | 2.90 | |
| | SUBTOTAL - TYPE 27 BARRIER TRANSITION BLOCK | | | 19.04 |
| | | | TOTAL | 181.22 |

# ESA FENCING

| LOCATION (POST MILE) | Temp FENCE (TYPE ESA) LF |
|---|---|
| 0.18/0.31 - NB | 300 |
| TOTAL | 300 |

# EROSION AND WATER POLLUTION CONTROL

| LOCATION | | TEMPORARY FIBER ROLL | MULCH | TEMPORARY DRAINAGE INLET PROTECTION |
|---|---|---|---|---|
| POSTMILE | DIRECTION | LF | CY | EA |
| T0.2/R126.8 | | 3000 | 90 | 43 |
| 15.34 | SB | 100 | | |
| 15.14/15.67 | SB | 100 | | |
| 18.65/19.39 | NB | 100 | | |
| 19.72/20.50 | | 100 | | |
| 46.42/47.21 | | 100 | | |
| | TOTAL | 3500 | 90 | 43 |

# SUMMARY OF QUANTITIES
## Q-21

REVISED BY | DATE REVISED
BRENDA C. HARWELL | JUAN SALAS
CALCULATED-DESIGNED BY | CHECKED BY
FUNCTIONAL SUPERVISOR: L.R. ASHLEY
STATE OF CALIFORNIA - DEPARTMENT OF TRANSPORTATION
Caltrans® DESIGN
\\sv01s01\PSESUBMIT\01_46400\146400pa021.dgn

LAST REVISION 06-25-09 | DATE PLOTTED => 23-SEP-2009 | TIME PLOTTED => 06:53

| DIST | COUNTY | ROUTE | POST MILES TOTAL PROJECT | SHEET NO. | TOTAL SHEETS |
|---|---|---|---|---|---|
| 01 | Hum | 101 | T0.2/R126.0 | 38 | 72 |

Randell D. Hiatt
REGISTERED CIVIL ENGINEER

June 6, 2008
PLANS APPROVAL DATE

REGISTERED PROFESSIONAL ENGINEER
Randell D. Hiatt
No. C50200
Exp. 6-30-09
CIVIL
STATE OF CALIFORNIA

*The State of California or its officers or agents shall not be responsible for the accuracy or completeness of electronic copies of this plan sheet.*

*To accompany plans dated* 9-21-09

## NOTES:

1. When necessary to place dike in front of face of guard railing, only Type C dike may be used. For dike details, see Standard Plan A87B.
2. For standard railing post embedment, see Standard Plans A77C3.
3. Guard railing delineation to be used where shown on the Project Plans.
4. When dike or curb is placed under guard railing, the maximum height of the dike or curb shall be 4". Mountable dike should not be used. For dike and curb details, see Revised Standard Plans RSP A87A and Standard Plan A87B.
5. For details of typical distance between the face of rail and hinge point, see Standard Plan A77C3.

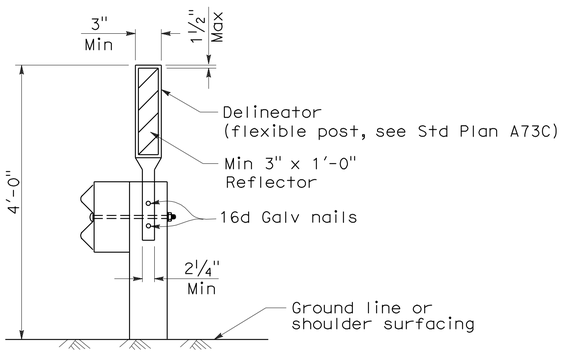


GUARD RAILING DELINEATION

See Note 3

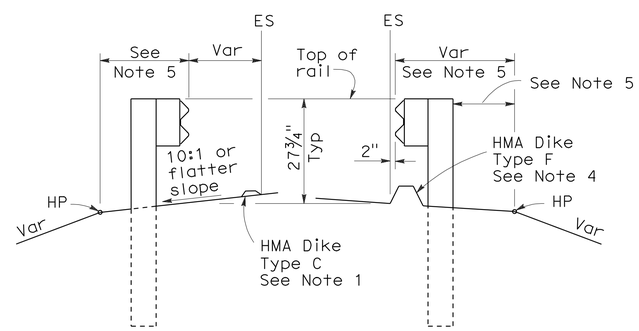


DIKE POSITIONING

See Note 1

STATE OF CALIFORNIA
DEPARTMENT OF TRANSPORTATION

# METAL BEAM GUARD RAILING TYPICAL RAILING DELINEATION AND DIKE POSITIONING DETAILS

NO SCALE

RSP A77C4 DATED JUNE 6, 2008 SUPERSEDES STANDARD PLAN A77C4
DATED MAY 1, 2006 - PAGE 47 OF THE STANDARD PLANS BOOK DATED MAY 2006.

**REVISED STANDARD PLAN RSP A77C4**

**2006 REVISED STANDARD PLAN RSP A77C4**

12-10-07

| DIST | COUNTY | ROUTE | POST MILES TOTAL PROJECT | SHEET NO. | TOTAL SHEETS |
|---|---|---|---|---|---|
| 01 | Hum | 101 | T0.2/R126.0 | 39 | 72 |

Randell D. Hiatt
REGISTERED CIVIL ENGINEER

June 6, 2008
PLANS APPROVAL DATE

REGISTERED PROFESSIONAL ENGINEER Randell D. Hiatt No. C50200 Exp. 6-30-09 CIVIL STATE OF CALIFORNIA

*The State of California or its officers or agents shall not be responsible for the accuracy or completeness of electronic copies of this plan sheet.*

*To accompany plans dated* 9-21-09

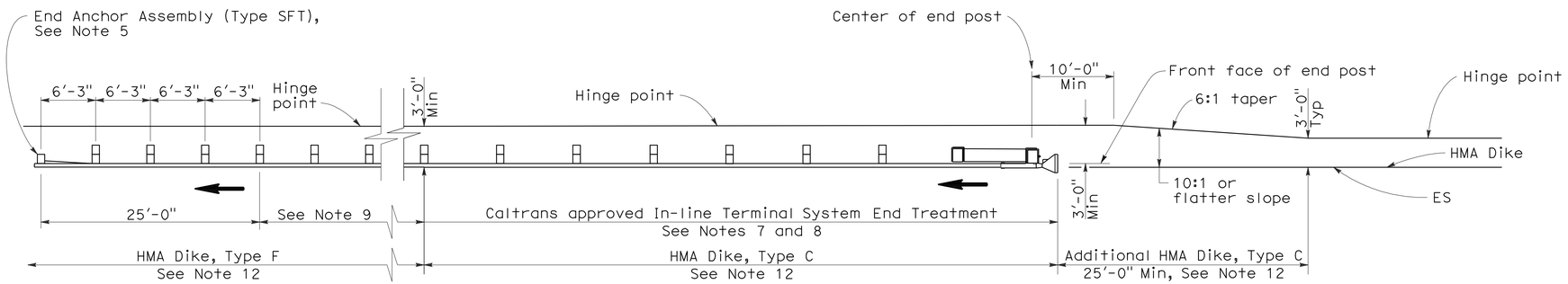


## TYPE 11A LAYOUT

(EMBANKMENT GUARD INSTALLATION WITH IN-LINE END TREATMENT AT TRAFFIC APPROACH END OF RAILING)
See Note 6

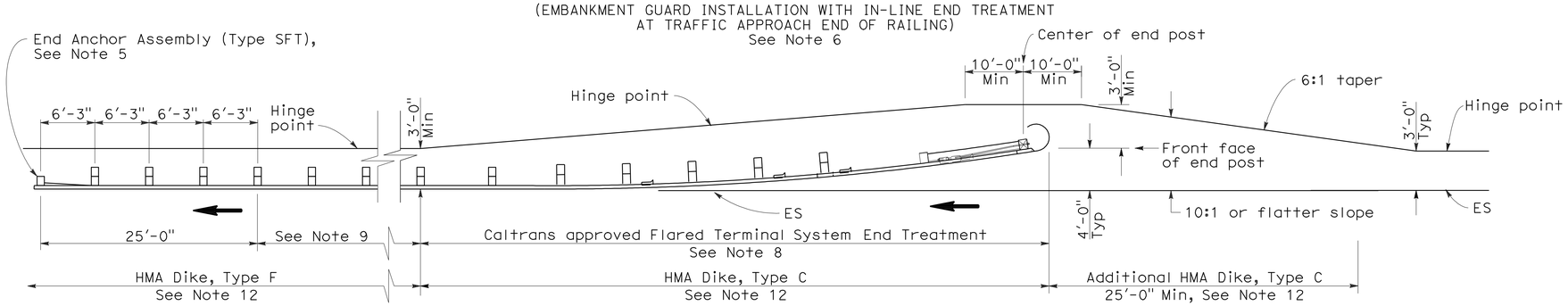


## TYPE 11B LAYOUT

(EMBANKMENT GUARD RAILING INSTALLATION WITH FLARED END TREATMENT AT TRAFFIC APPROACH END OF RAILING)
See Note 6

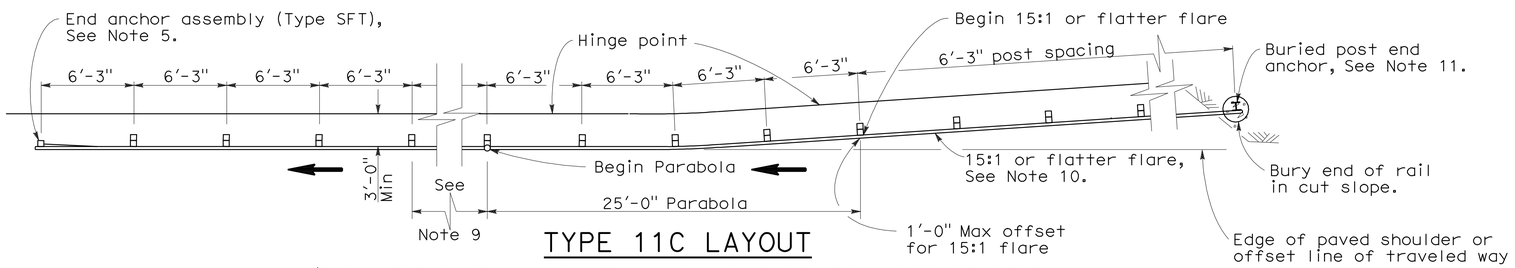


## TYPE 11C LAYOUT

(EMBANKMENT GUARD RAILING INSTALLATION WITH BURIED END ANCHOR TREATMENT AT TRAFFIC APPROACH END OF RAILING)
See Notes 6 and 12

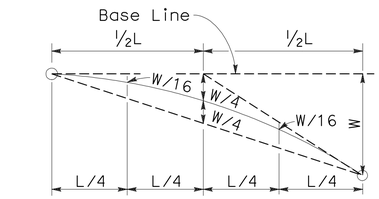


## TYPICAL PARABOLIC LAYOUT

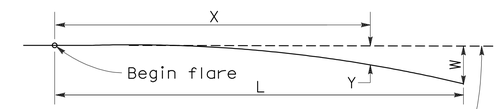


Base Line (Edge of paved shoulder or offset line of edge of traveled way)

$$Y = \frac{WX^2}{L^2}$$

Y = Offset from base line
W = Maximum offset
X = Distance along base line
L = Length of flare

## PARABOLIC FLARE OFFSETS

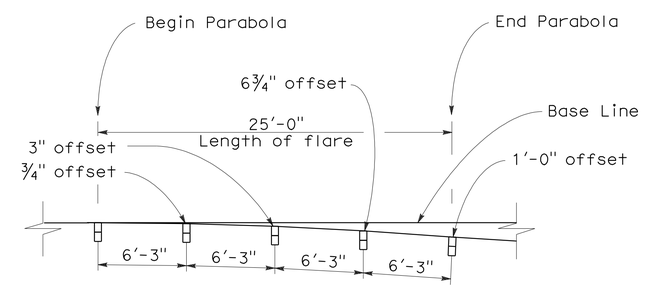


## TYPICAL FLARE OFFSETS FOR 1 FOOT MAX END OFFSET

## NOTES:

1. Line post, blocks and hardware to be used are shown on Standard Plans A77A1, A77A2, A77B1, A77C1, and A77C2.
2. Guard rail post spacing to be 6'-3" center to center, except as otherwise noted.
3. Except as noted, line posts are 6" x 8" x 6'-0" wood with 6" x 8" x 1'-2" wood blocks. W6 x 9 steel posts, 6'-0" in length, with 6" x 8" x 1'-2" notched wood blocks or recycled plastic blocks may be used for 6" x 8" x 6'-0" wood post with 6" x 8" x 1'-2" wood blocks where applicable and when specified.
4. Direction of adjacent traffic indicated by ⟶.
5. For End Anchor Assembly (Type SFT) details, see Standard Plan A77H1.
6. Layout Types 11A, 11B or 11C are typically used where guard railing is recommended to shield embankment slopes and a crashworthy end treatment is required for only one direction of traffic.
7. In-line Terminal System End Treatments are used where site conditions will not accommodate a flared end treatment.
8. The type of terminal system end treatment to be used will be shown on the Project Plans.
9. Dependent on site conditions (embankment height and side slope), construction of additional guard railing (length equal to multiples of 12'-6" with 6'-3" post spacing) may be advisable.
10. The 15:1 or flatter flare used with buried end anchors is based on the edge of the paved shoulder or offset line of edge of the traveled way. The length of guard railing within the 15:1 or flatter flare is based on site conditions and should be a length equal to multiples of 12'-6".
11. For details of the buried post end anchor used with Type 11C Layout, see Standard Plan A77I2.
12. Where placement of dike is required with guard railing installations, see Revised Standard Plan RSP A77C4 for dike positioning details.

STATE OF CALIFORNIA
DEPARTMENT OF TRANSPORTATION

# METAL BEAM GUARD RAILING TYPICAL LAYOUTS FOR EMBANKMENTS

NO SCALE

RSP A77E1 DATED JUNE 6, 2008 SUPERSEDES STANDARD PLAN A77E1 DATED MAY 1, 2006 - PAGE 48 OF THE STANDARD PLANS BOOK DATED MAY 2006.

**REVISED STANDARD PLAN RSP A77E1**

**2006 REVISED STANDARD PLAN RSP A77E1**

12-10-07

| DIST | COUNTY | ROUTE | POST MILES TOTAL PROJECT | SHEET NO. | TOTAL SHEETS |
|---|---|---|---|---|---|
| 01 | Hum | 101 | T0.2/R126.0 | 40 | 72 |

Randell D. Hiatt
REGISTERED CIVIL ENGINEER

June 6, 2008
PLANS APPROVAL DATE

REGISTERED PROFESSIONAL ENGINEER
Randell D. Hiatt
No. C50200
Exp. 6-30-09
CIVIL
STATE OF CALIFORNIA

*The State of California or its officers or agents shall not be responsible for the accuracy or completeness of electronic copies of this plan sheet.*

*To accompany plans dated* 9-21-09

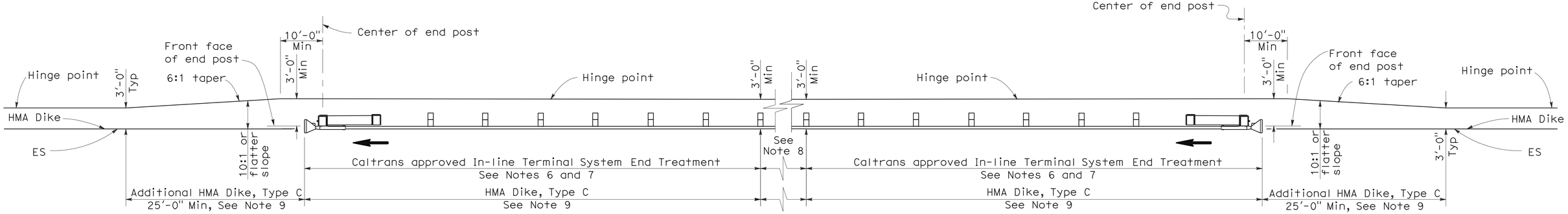


## TYPE 11D LAYOUT

(EMBANKMENT GUARD RAILING INSTALLATION WITH IN-LINE END TREATMENT AT EACH END OF RAILING)
See Note 5

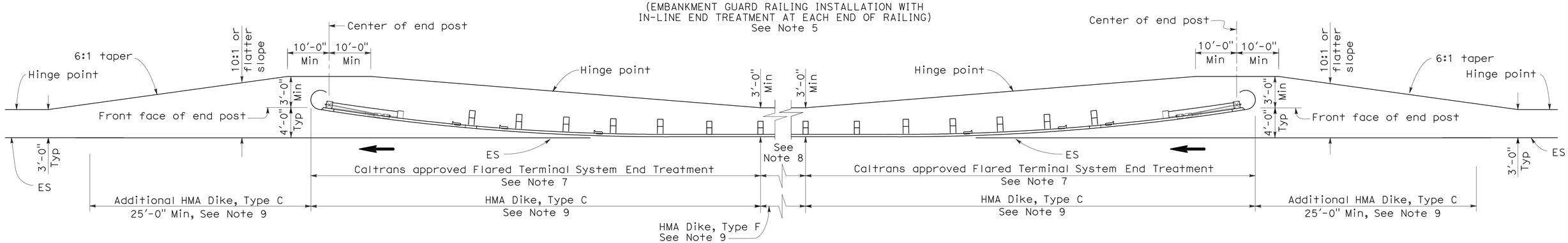


## TYPE 11E LAYOUT

(EMBANKMENT GUARD RAILING INSTALLATION WITH FLARED END TREATMENT AT EACH END OF RAILING)
See Note 5

## NOTES:

1. Line post, blocks and hardware to be used are shown on Standard Plans A77A1, A77A2, A77B1, A77C1 and A77C2.
2. Guard rail post spacing to be 6'-3" center to center, except as otherwise noted.
3. Except as noted, line posts are 6" x 8" x 6'-0" wood with 6" x 8" x 1'-2" wood blocks. W6 x 9 steel posts, 6'-0" in length, with 6" x 8" x 1'-2" notched wood blocks or plastic blocks may be used for 6" x 8" x 6'-0" wood post with 6" x 8" x 1'-2" wood blocks where applicable and when specified.
4. Direction of adjacent traffic indicated by ⟶.
5. Layout Types 11D through 11L, shown on the A77E Series of Revised Standard Plans, are typically used where guard railing is recommended to shield embankment slopes and a crashworthy end treatment is required for both directions of traffic.
6. In-line Terminal System End Treatments are used where site conditions will not accommodate a flared end treatment.
7. The type of terminal system end treatment to be used will be shown on the Project Plans.
8. Dependent on site conditions (embankment height and side slope), construction of additional guard railing (length equal to multiples of 12'-6" with 6'-3" post spacing) may be advisable.
9. Where placement of dike is required with guard railing installations, see Revised Standard Plan RSP A77C4 for dike positioning details.

STATE OF CALIFORNIA
DEPARTMENT OF TRANSPORTATION

# METAL BEAM GUARD RAILING TYPICAL LAYOUTS FOR EMBANKMENTS

NO SCALE

RSP A77E2 DATED JUNE 6, 2008 SUPERSEDES STANDARD PLAN A77E2
DATED MAY 1, 2006 - PAGE 49 OF THE STANDARD PLANS BOOK DATED MAY 2006.

**REVISED STANDARD PLAN RSP A77E2**

**2006 REVISED STANDARD PLAN RSP A77E2**

12-10-07

| DIST | COUNTY | ROUTE | POST MILES TOTAL PROJECT | SHEET NO. | TOTAL SHEETS |
|---|---|---|---|---|---|
| 01 | Hum | 101 | T0.2/R126.0 | 41 | 72 |

Randell D. Hiatt
REGISTERED CIVIL ENGINEER

June 6, 2008
PLANS APPROVAL DATE

REGISTERED PROFESSIONAL ENGINEER
Randell D. Hiatt
No. C50200
Exp. 6-30-09
CIVIL
STATE OF CALIFORNIA

*The State of California or its officers or agents shall not be responsible for the accuracy or completeness of electronic copies of this plan sheet.*

*To accompany plans dated* 9-21-09

**2006 REVISED STANDARD PLAN RSP A77E3**

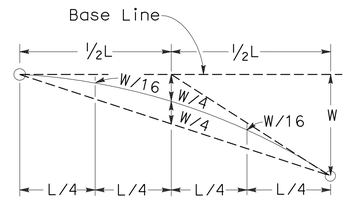


## TYPICAL PARABOLIC LAYOUT

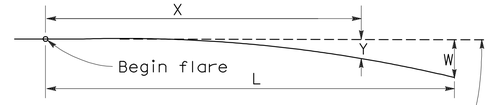


Base Line (Edge of paved shoulder or offset line of edge of traveled way)

$$Y = \frac{WX^2}{L^2}$$

Y = Offset from base line
W = Maximum offset
X = Distance along base line
L = Length of flare

## PARABOLIC FLARE OFFSETS

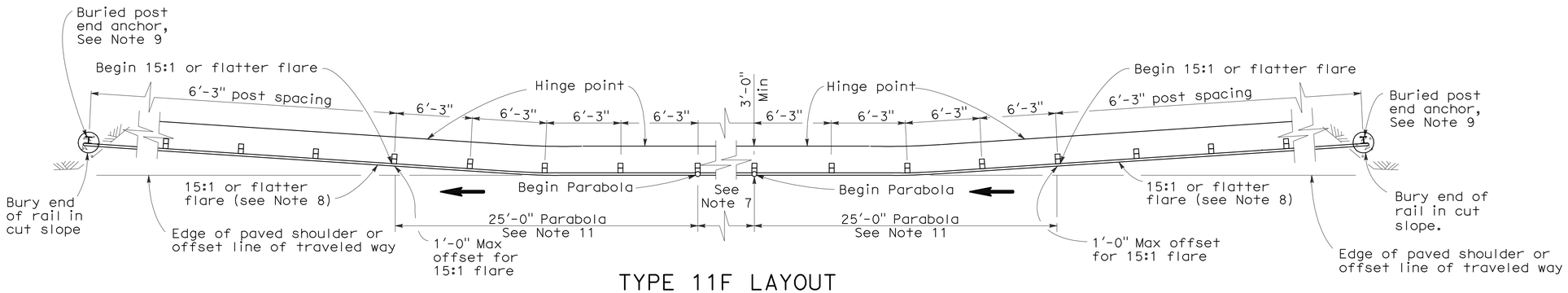


## TYPE 11F LAYOUT

(EMBANKMENT GUARD RAILING INSTALLATION WITH A
BURIED END ANCHOR TREATMENT AT EACH END OF RAILING)
See Notes 5 and 10

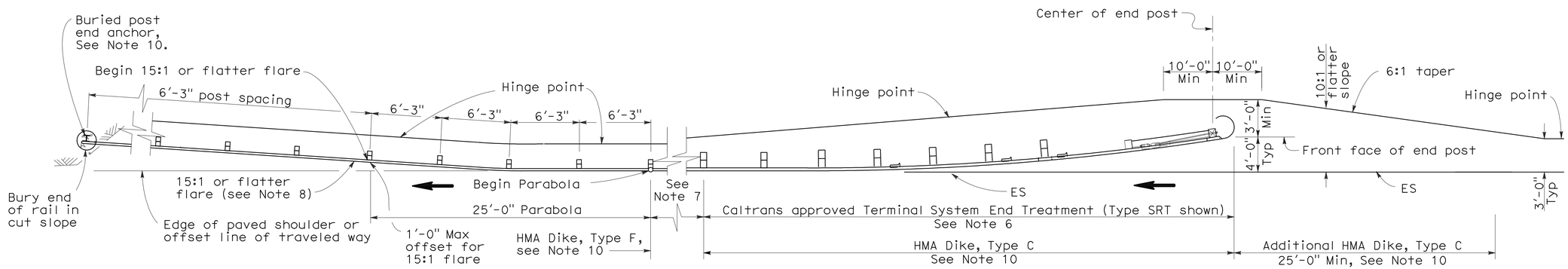


## TYPE 11G LAYOUT

(EMBANKMENT GUARD RAILING INSTALLATION WITH FLARED END TREATMENT
AND A BURIED END ANCHOR TREATMENT AT THE ENDS OF RAILING)
See Notes 5 and 10

## NOTES:

1. Line post, blocks and hardware to be used are shown on Standard Plans A77A1, A77A2, A77B1, A77C1 and A77C2.
2. Guard rail post spacing to be 6'-3" center to center, except as otherwise noted.
3. Except as noted, line posts are 6" x 8" x 6'-0" wood with 6" x 8" x 1'-2" wood blocks. W6 x 9 steel posts, 6'-0" in length, with 6" x 8" x 1'-2" notched wood blocks or plastic blocks may be used for 6" x 8" x 6'-0" wood post with 6" x 8" x 1'-2" wood blocks where applicable and when specified.
4. Direction of adjacent traffic indicated by ⟶.
5. Layout Types 11D through 11L, shown on the A77E Series of Revised Standard Plans, are typically used where guard railing is recommended to shield embankment slopes and a crashworthy end treatment is required for both directions of traffic.
6. The type of terminal system end treatment to be used will be shown on the Project Plans.
7. Dependent on site conditions (embankment height and side slope), construction of additional guard railing (length equal to multiples of 12'-6" with 6'-3" post spacing) may be advisable.
8. The 15:1 or flatter flare used with buried end anchors is based on the edge of the paved shoulder or offset line of edge of the traveled way. The length of guard railing within the 15:1 or flatter flare is based on site conditions and should be a length equal to multiples of 12'-6".
9. For details of the buried post end anchor used with Type 11F and 11G Layouts, see Standard Plan A77I2.
10. Where placement of dike is required with guard railing installations, see Revised Standard Plan RSP A77C4 for dike positioning details.
11. For typical flare offsets for 25'-0" length parabola with maximum offset of 1'-0", see Revised Standard Plan RSP A77E1.

STATE OF CALIFORNIA
DEPARTMENT OF TRANSPORTATION

# METAL BEAM GUARD RAILING TYPICAL LAYOUTS FOR EMBANKMENTS

NO SCALE

RSP A77E3 DATED JUNE 6, 2008 SUPERSEDES STANDARD PLAN A77E3
DATED MAY 1, 2006 - PAGE 50 OF THE STANDARD PLANS BOOK DATED MAY 2006.

**REVISED STANDARD PLAN RSP A77E3**

12-10-07

| DIST | COUNTY | ROUTE | POST MILES TOTAL PROJECT | SHEET NO. | TOTAL SHEETS |
|---|---|---|---|---|---|
| 01 | Hum | 101 | T0.2/R126.0 | 42 | 72 |

Randell D. Hiatt
REGISTERED CIVIL ENGINEER

June 6, 2008
PLANS APPROVAL DATE

REGISTERED PROFESSIONAL ENGINEER
Randell D. Hiatt
No. C50200
Exp. 6-30-09
CIVIL
STATE OF CALIFORNIA

*The State of California or its officers or agents shall not be responsible for the accuracy or completeness of electronic copies of this plan sheet.*

*To accompany plans dated* 9-21-09

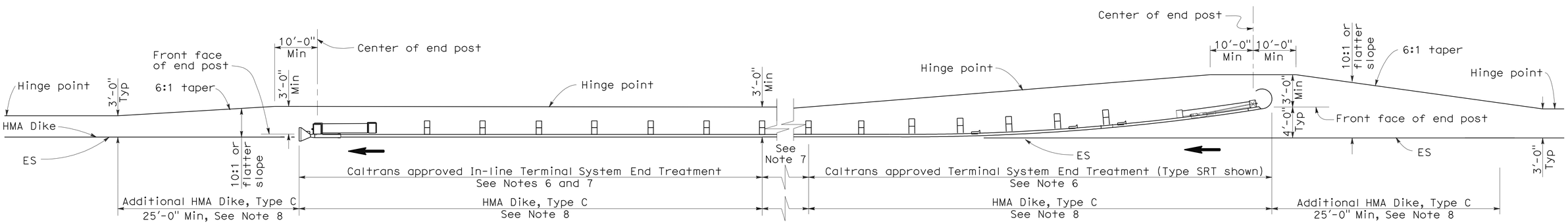


## TYPE 11H LAYOUT

(EMBANKMENT GUARD RAILING INSTALLATION WITH FLARED END TREATMENT
AND AN IN-LINE TREATMENT AT THE ENDS OF RAILING)
See Notes 5 and 8

## NOTES:

1. Line post, blocks and hardware to be used are shown on Standard Plans A77A1, A77A2, A77B1, A77C1 and A77C2.
2. Guard rail post spacing to be 6'-3" center to center, except as otherwise noted.
3. Except as noted, line posts are 6" x 8" x 6'-0" wood with 6" x 8" x 1'-2" wood blocks. W6 x 9 steel posts, 6'-0" in length, with 6" x 8" x 1'-2" notched wood blocks or plastic blocks may be used for 6" x 8" x 6'-0" wood post with 6" x 8" x 1'-2" wood blocks where applicable and when specified.
4. Direction of adjacent traffic indicated by ➡.
5. Layout Types 11D through 11L, shown on the A77E Series of Revised Standard Plans, are typically used where guard railing is recommended to shield embankment slopes and a crashworthy end treatment is required for both directions of traffic.
6. The type of terminal system end treatment to be used will be shown on the Project Plans.
7. Dependent on site conditions (embankment height and side slope), construction of additional guard railing (length equal to multiples of 12'-6" with 6'-3" post spacing) may be advisable.
8. Where placement of dike is required with guard railing installations, see Revised Standard Plan RSP A77C4 for dike positioning details.

STATE OF CALIFORNIA
DEPARTMENT OF TRANSPORTATION

# METAL BEAM GUARD RAILING TYPICAL LAYOUTS FOR EMBANKMENTS

NO SCALE

RSP A77E4 DATED JUNE 6, 2008 SUPERSEDES STANDARD PLAN A77E4
DATED MAY 1, 2006 - PAGE 51 OF THE STANDARD PLANS BOOK DATED MAY 2006.

**REVISED STANDARD PLAN RSP A77E4**

**2006 REVISED STANDARD PLAN RSP A77E4**

12-10-07

| DIST | COUNTY | ROUTE | POST MILES TOTAL PROJECT | SHEET NO. | TOTAL SHEETS |
|---|---|---|---|---|---|
| 01 | Hum | 101 | T0.2/R126.0 | 43 | 72 |

Randell D. Hiatt
REGISTERED CIVIL ENGINEER

June 6, 2008
PLANS APPROVAL DATE

REGISTERED PROFESSIONAL ENGINEER
Randell D. Hiatt
No. C50200
Exp. 6-30-09
CIVIL
STATE OF CALIFORNIA

*The State of California or its officers or agents shall not be responsible for the accuracy or completeness of electronic copies of this plan sheet.*

*To accompany plans dated* 9-21-09

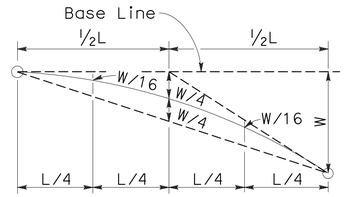


## TYPICAL PARABOLIC LAYOUT

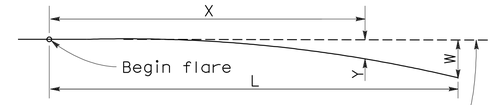


Base Line (Edge of paved shoulder or offset line of edge of traveled way)

$$Y = \frac{WX^2}{L^2}$$

Y = Offset from base line
W = Maximum offset
X = Distance along base line
L = Length of flare

## PARABOLIC FLARE OFFSETS

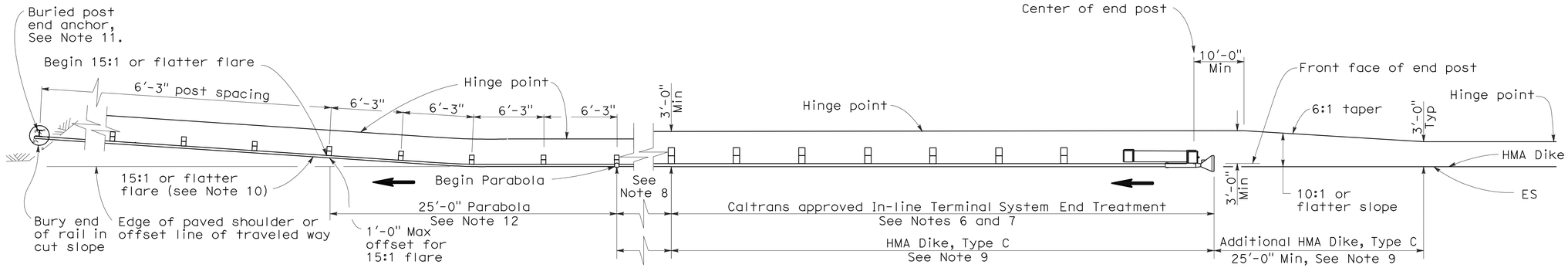


## TYPE 11I LAYOUT

(EMBANKMENT GUARD RAILING INSTALLATION WITH IN-LINE END TREATMENT AND A BURIED END ANCHOR TREATMENT AT THE ENDS OF RAILING)
See Note 5

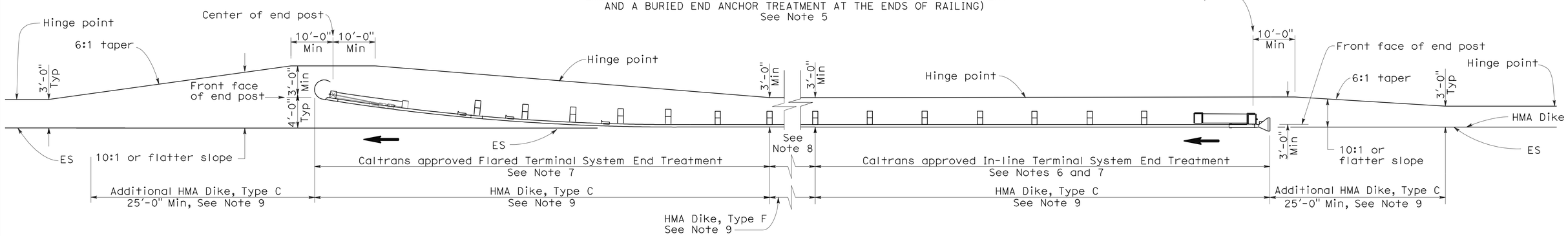


## TYPE 11J LAYOUT

(EMBANKMENT GUARD RAILING INSTALLATION WITH IN-LINE END TREATMENT AND FLARED END TREATMENT AT THE ENDS OF RAILING)
See Note 5

## NOTES:

1. Line post, blocks and hardware to be used are shown on Standard Plans A77A1, A77A2, A77B1, A77C1 and A77C2.
2. Guard rail post spacing to be 6'-3" center to center, except as otherwise noted.
3. Except as noted, line posts are 6" x 8" x 6'-0" wood with 6" x 8" x 1'-2" wood blocks. W6 x 9 steel posts, 6'-0" in length, with 6" x 8" x 1'-2" notched wood blocks or plastic blocks may be used for 6" x 8" x 6'-0" wood post with 6" x 8" x 1'-2" wood blocks where applicable and when specified.
4. Direction of adjacent traffic indicated by ⟶.
5. Layout Types 11D through 11L, shown on the A77E Series of Revised Standard Plans, are typically used where guard railing is recommended to shield embamkment slopes and a crashworthy end treatment is required for both directions of traffic.
6. In-line Terminal System End Treatments are used where site conditions will not accommodate a flared end treatment.
7. The type of terminal system end treatment to be used will be shown on the Project Plans.
8. Dependent on site conditions (embankment height and side slope), construction of additional guard railing (length equal to multiples of 12'-6" with 6'-3" post spacing) may be advisable.
9. Where placement of dike is required with guard railing installations, see Revised Standard Plan RSP A77C4 for dike positioning details.
10. The 15:1 or flatter flare used with buried end anchors is based on the edge of the paved shoulder or offset line of edge of the traveled way. The length of guard railing within the 15:1 or flatter flare is based on site conditions and should be a length equal to multiples of 12'-6".
11. For details of the buried post end anchor used with Type 11I Layout, see Standard Plan A77I2.
12. For typical flare offsets for 25'-0" length parabola with maximum offset of 1'-0", see Revised Standard Plan RSP A77E1.

STATE OF CALIFORNIA
DEPARTMENT OF TRANSPORTATION

# METAL BEAM GUARD RAILING TYPICAL LAYOUTS FOR EMBANKMENTS

NO SCALE

RSP A77E5 DATED JUNE 6, 2008 SUPERSEDES STANDARD PLAN A77E5 DATED MAY 1, 2006 - PAGE 52 OF THE STANDARD PLANS BOOK DATED MAY 2006.

**REVISED STANDARD PLAN RSP A77E5**

**2006 REVISED STANDARD PLAN RSP A77E5**

12-10-07

| DIST | COUNTY | ROUTE | POST MILES TOTAL PROJECT | SHEET NO. | TOTAL SHEETS |
|---|---|---|---|---|---|
| 01 | Hum | 101 | T0.2/R126.0 | 44 | 72 |

Randell D. Hiatt
REGISTERED CIVIL ENGINEER

June 6, 2008
PLANS APPROVAL DATE

REGISTERED PROFESSIONAL ENGINEER
Randell D. Hiatt
No. C50200
Exp. 6-30-09
CIVIL
STATE OF CALIFORNIA

*The State of California or its officers or agents shall not be responsible for the accuracy or completeness of electronic copies of this plan sheet.*

*To accompany plans dated* 9-21-09

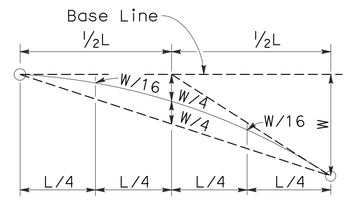


## TYPICAL PARABOLIC LAYOUT

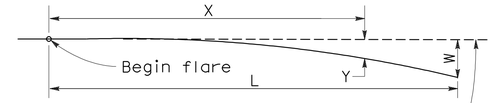


Base Line (Edge of paved shoulder or offset line of edge of traveled way)

$$Y = \frac{WX^2}{L^2}$$

Y = Offset from base line
W = Maximum offset
X = Distance along base line
L = Length of flare

## PARABOLIC FLARE OFFSETS

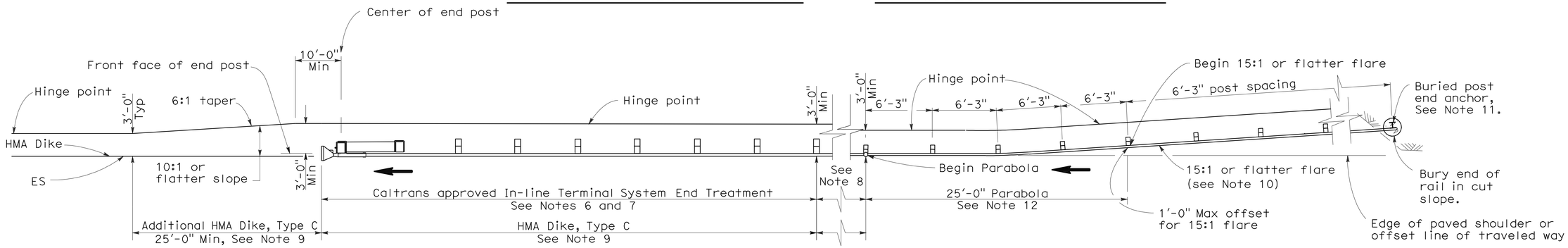


## TYPE 11K LAYOUT

(EMBANKMENT GUARD RAILING INSTALLATION WITH A BURIED END ANCHOR TREATMENT AND AN IN-LINE END TREATMENT AT THE ENDS OF RAILING)
See Note 5

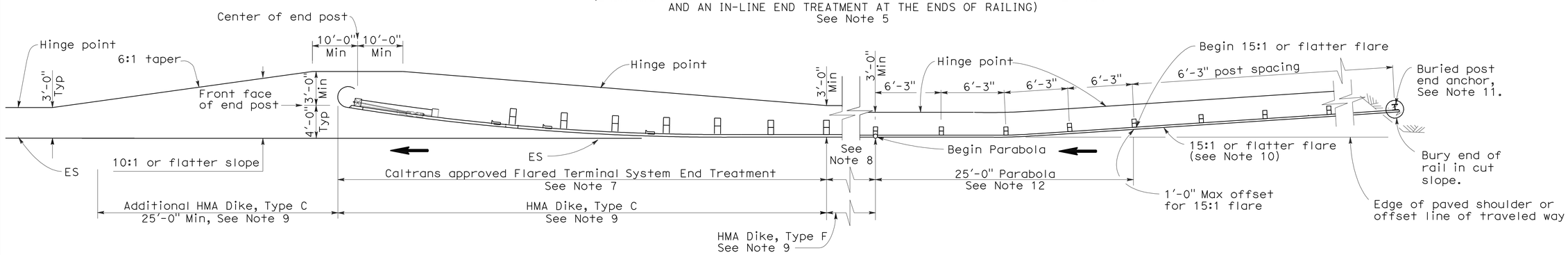


## TYPE 11L LAYOUT

(EMBANKMENT GUARD RAILING INSTALLATION WITH A BURIED END ANCHOR TREATMENT AND A FLARED END TREATMENT AT THE ENDS OF RAILING)
See Note 5

## NOTES:

1. Line post, blocks and hardware to be used are shown on Standard Plans A77A1, A77A2, A77B1, A77C1 and A77C2.
2. Guard rail post spacing to be 6'-3" center to center, except as otherwise noted.
3. Except as noted, line posts are 6" x 8" x 6'-0" wood with 6" x 8" x 1'-2" wood blocks. W6 x 9 steel posts, 6'-0" in length, with 6" x 8" x 1'-2" notched wood blocks or plastic blocks may be used for 6" x 8" x 6'-0" wood post with 6" x 8" x 1'-2" wood blocks where applicable and when specified.
4. Direction of adjacent traffic indicated by ⟶.
5. Layout Types 11D through 11L, shown on the A77E Series of Revised Standard Plans, are typically used where guard railing is recommended to shield embamkment slopes and a crashworthy end treatment is required for both directions of traffic.
6. In-line Terminal System End Treatments are used where site conditions will not accommodate a flared end treatment.
7. The type of terminal system end treatment to be used will be shown on the Project Plans.
8. Dependent on site conditions (embankment height and side slope), construction of additional guard railing (length equal to multiples of 12'-6" with 6'-3" post spacing) may be advisable.
9. Where placement of dike is required with guard railing installations, see Revised Standard Plan RSP A77C4 for dike positioning details.
10. The 15:1 or flatter flare used with buried end anchors is based on the edge of the paved shoulder or offset line of edge of the traveled way. The length of guard railing within the 15:1 or flatter flare is based on site conditions and should be a length equal to multiples of 12'-6".
11. For details of the buried post end anchor used with Type 11K and 11L Layouts, see Standard Plan A77I2.
12. For typical flare offsets for 25'-0" length parabola with maximum offset of 1'-0", see Revised Standard Plan RSP A77E1.

STATE OF CALIFORNIA
DEPARTMENT OF TRANSPORTATION

# METAL BEAM GUARD RAILING TYPICAL LAYOUTS FOR EMBANKMENTS

NO SCALE

RSP A77E6 DATED JUNE 6, 2008 SUPERSEDES STANDARD PLAN A77E6
DATED MAY 1, 2006 - PAGE 53 OF THE STANDARD PLANS BOOK DATED MAY 2006.

**REVISED STANDARD PLAN RSP A77E6**

**2006 REVISED STANDARD PLAN RSP A77E6**

12-10-07

| DIST | COUNTY | ROUTE | POST MILES TOTAL PROJECT | SHEET NO. | TOTAL SHEETS |
|---|---|---|---|---|---|
| 01 | Hum | 101 | T0.2/R126.0 | 45 | 72 |

Randell D. Hiatt
REGISTERED CIVIL ENGINEER

June 6, 2008
PLANS APPROVAL DATE

REGISTERED PROFESSIONAL ENGINEER
Randell D. Hiatt
No. C50200
Exp. 6-30-09
CIVIL
STATE OF CALIFORNIA

*The State of California or its officers or agents shall not be responsible for the accuracy or completeness of electronic copies of this plan sheet.*

*To accompany plans dated* 9-21-09

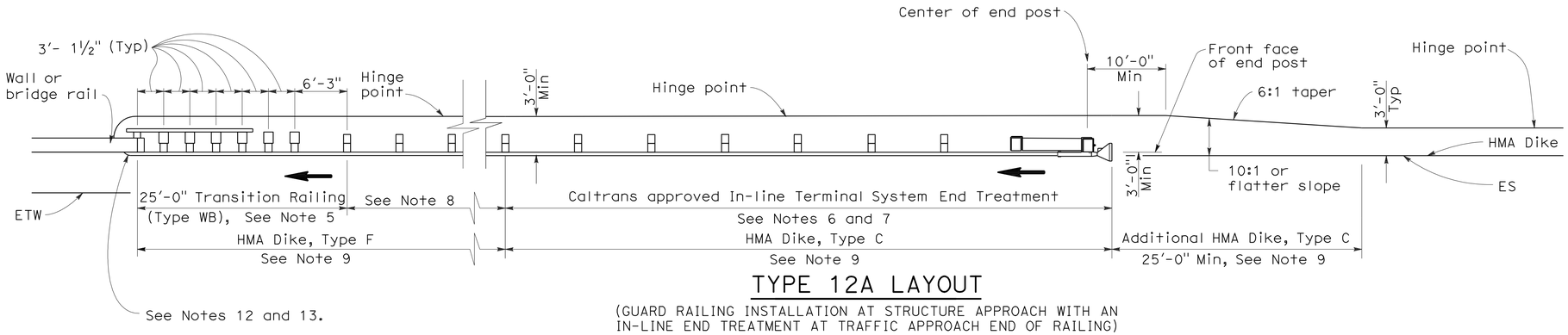


## TYPE 12A LAYOUT

(GUARD RAILING INSTALLATION AT STRUCTURE APPROACH WITH AN IN-LINE END TREATMENT AT TRAFFIC APPROACH END OF RAILING)
See Notes 10

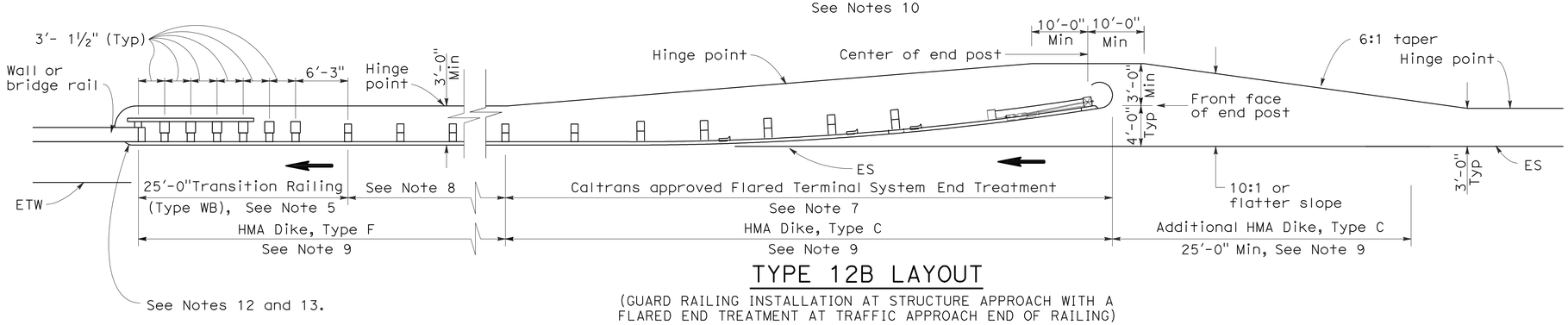


## TYPE 12B LAYOUT

(GUARD RAILING INSTALLATION AT STRUCTURE APPROACH WITH A FLARED END TREATMENT AT TRAFFIC APPROACH END OF RAILING)
See Notes 10

## NOTES:

1. Line post, blocks and hardware to be used are shown on Standard Plans A77A1, A77A2, A77B1, A77C1 and A77C2.
2. Guard rail post spacing to be 6'-3" center to center, except as otherwise noted.
3. Except as noted, line posts are 6" x 8" x 6'-0" wood with 6" x 8" x 1'-2" wood blocks. W6 x 9 steel posts, 6'-0" in length, with 6" x 8" x 1'-2" notched wood blocks or plastic blocks may be used for 6" x 8" x 6'-0" wood posts with 6" x 8" x 1'-2" wood blocks where applicable and when specified.
4. Direction of adjacent traffic indicated by ➡.
5. For Transition Railing (Type WB) details for Types 12A and 12B Layouts, see Standard Plan A77J4.
6. In-line Terminal System End Treatments are used where site conditions will not accommodate a flared end treatment.
7. The type of terminal system end treatment to be used will be shown on the Project Plans.
8. Dependent on site conditions (embankment height, side slopes, or other fixed objects), it may be advisable to construct additional guard railing (a length equal to multiples of 12'-6" with 6'-3" post spacing) between the transition railing and end treatment.
9. Where placement of dike is required with guard railing installations, see Revised Standard Plan RSP A77C4 for dike positioning details.
10. Type 12A or Type 12B Layouts are typically used:
    a. To the right of approaching traffic, at the end of a structure, on two-lane conventional highway where the roadbed width across the structure is less than 40 feet.
    b. To the left of approaching traffic, at the end of a structure, on two-lane conventional highway where the roadbed width across the structure is less than 40 feet.
    c. To the right of approaching traffic at the end of each structure on multilane freeways or expressways with separate adjacent or parallel bridges.
    d. To the right of approaching traffic at the end of the structure on multilane freeways or expressways with decked median on the bridge.
11. See Revised Standard Plan RSP A77F3 for typical layout used left of approaching traffic at the ends of each structure on multilane freeways or expressways with separate adjacent or parallel bridges.
12. For additional details of typical connections to bridge rail, see Connection Detail AA on Revised Standard Plans RSP A77J1 and RSP A77J2 and Connection Detail FF on Standard Plans A77K1 and A77K2.
13. For additional details of a typical connection to walls or abutments, see Standard Plan A77J3.

STATE OF CALIFORNIA
DEPARTMENT OF TRANSPORTATION

# METAL BEAM GUARD RAILING TYPICAL LAYOUTS FOR STRUCTURE APPROACH

NO SCALE

RSP A77F1 DATED JUNE 6, 2008 SUPERSEDES STANDARD PLAN A77F1
DATED MAY 1, 2006 - PAGE 54 OF THE STANDARD PLANS BOOK DATED MAY 2006.

**REVISED STANDARD PLAN RSP A77F1**

**2006 REVISED STANDARD PLAN RSP A77F1**

| DIST | COUNTY | ROUTE | POST MILES TOTAL PROJECT | SHEET NO. | TOTAL SHEETS |
|---|---|---|---|---|---|
| 01 | Hum | 101 | T0.2/R126.0 | 46 | 72 |

Randell D. Hiatt
REGISTERED CIVIL ENGINEER

June 6, 2008
PLANS APPROVAL DATE

REGISTERED PROFESSIONAL ENGINEER
Randell D. Hiatt
No. C50200
Exp. 6-30-09
CIVIL
STATE OF CALIFORNIA

*The State of California or its officers or agents shall not be responsible for the accuracy or completeness of electronic copies of this plan sheet.*

*To accompany plans dated* 9-21-09

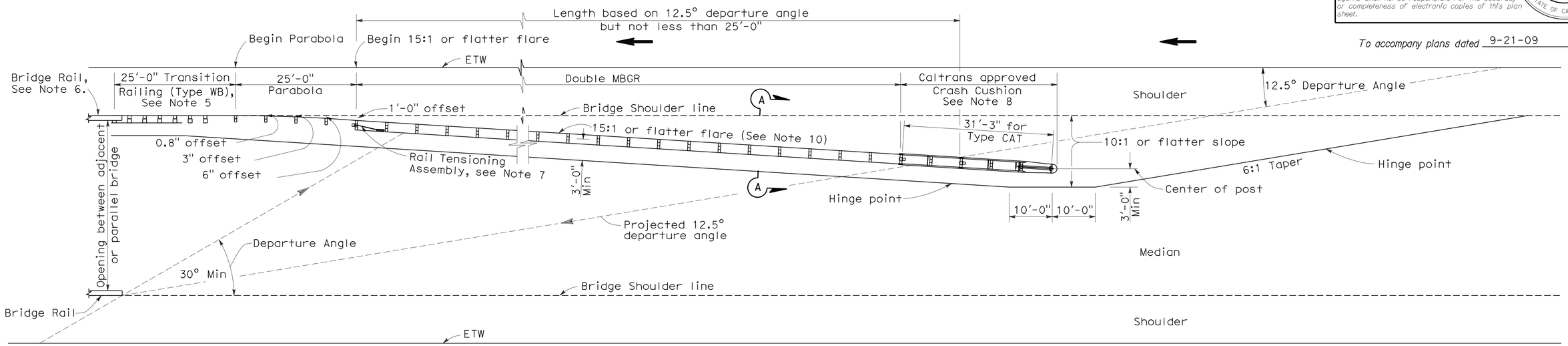


## TYPE 12E LAYOUT

See Note 10

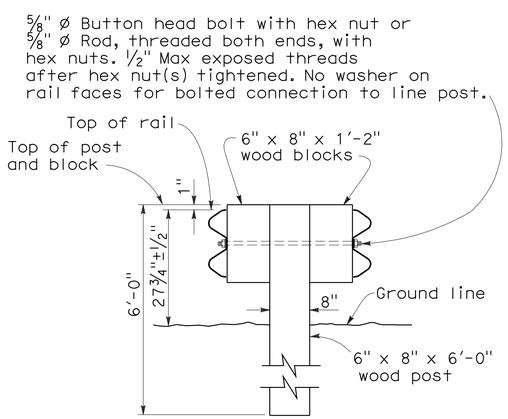


SECTION A-A

## TYPICAL DOUBLE METAL BEAM GUARD RAILING

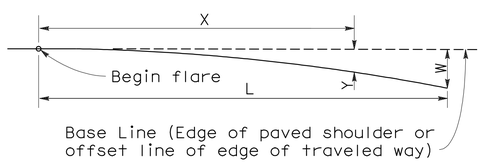


$$Y = \frac{WX^2}{L^2}$$

Y = Offset from base line
W = Maximum offset
X = Distance along base line
L = Length of flare

## PARABOLIC FLARE OFFSETS

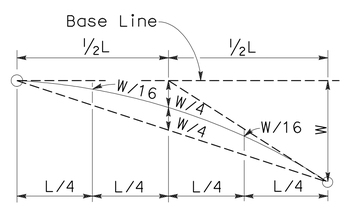


## TYPICAL PARABOLIC LAYOUT

## NOTES:

1. Line post, blocks and hardware to be used are shown on Standard Plans A77A1, A77A2, A77B1, A77C1 and A77C2.
2. Guard railing post spacing to be 6'-3" center to center, except as otherwise noted.
3. Except as noted, line posts are 6" x 8" x 6'-0" wood with 6" x 8" x 1'-2" wood blocks. W6 x 9 steel posts, 6'-0" in length, with 6" x 8" x 1'-2" notched wood blocks or notched recycled plastic blocks may be used for 6" x 8" x 6'-0" wood line posts with 6" x 8" x 1'-2" wood blocks where applicable and when specified.
4. Direction of adjacent traffic indicated by ⟶.
5. For Transition Railing (Type WB) details, see Standard Plan A77J4.
6. For additional details of a typical connection to bridge rail, see Connection Detail AA on Revised Standard Plan RSP A77J1.
7. For Rail Tensioning Assembly details, see Standard Plan A77H2.
8. The type of Crash Cushion to be used will be shown on the Project Plans.
9. Type 12E Layout is typically used left of approaching traffic at the end of each structure on multilane freeways or expressways where a median type barrier is not constructed between separated roadbeds.
10. The 15:1 or flatter flare is measured off of the edge of traveled way.

STATE OF CALIFORNIA
DEPARTMENT OF TRANSPORTATION

# METAL BEAM GUARD RAILING TYPICAL LAYOUTS FOR STRUCTURE APPROACH

NO SCALE

RSP A77F3 DATED JUNE 6, 2008 SUPERSEDES STANDARD PLAN A77F3
DATED MAY 1, 2006 - PAGE 56 OF THE STANDARD PLANS BOOK DATED MAY 2006.

**REVISED STANDARD PLAN RSP A77F3**

**2006 REVISED STANDARD PLAN RSP A77F3**

12-10-07

| DIST | COUNTY | ROUTE | POST MILES TOTAL PROJECT | SHEET NO. | TOTAL SHEETS |
|---|---|---|---|---|---|
| 01 | Hum | 101 | T0.2/R126.0 | 47 | 72 |

Randell D. Hiatt
REGISTERED CIVIL ENGINEER

June 6, 2008
PLANS APPROVAL DATE

REGISTERED PROFESSIONAL ENGINEER
Randell D. Hiatt
No. C50200
Exp. 6-30-09
CIVIL
STATE OF CALIFORNIA

*The State of California or its officers or agents shall not be responsible for the accuracy or completeness of electronic copies of this plan sheet.*

*To accompany plans dated* 9-21-09

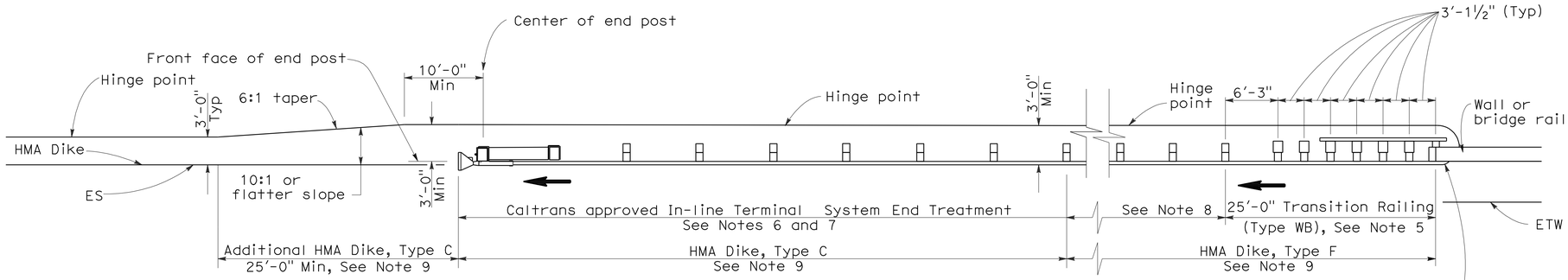


## TYPE 12AA LAYOUT

(GUARD RAILING INSTALLATION AT STRUCTURE DEPARTURE WITH AN IN-LINE END TREATMENT AT TRAILING END OF RAILING)
See Notes 9 and 10

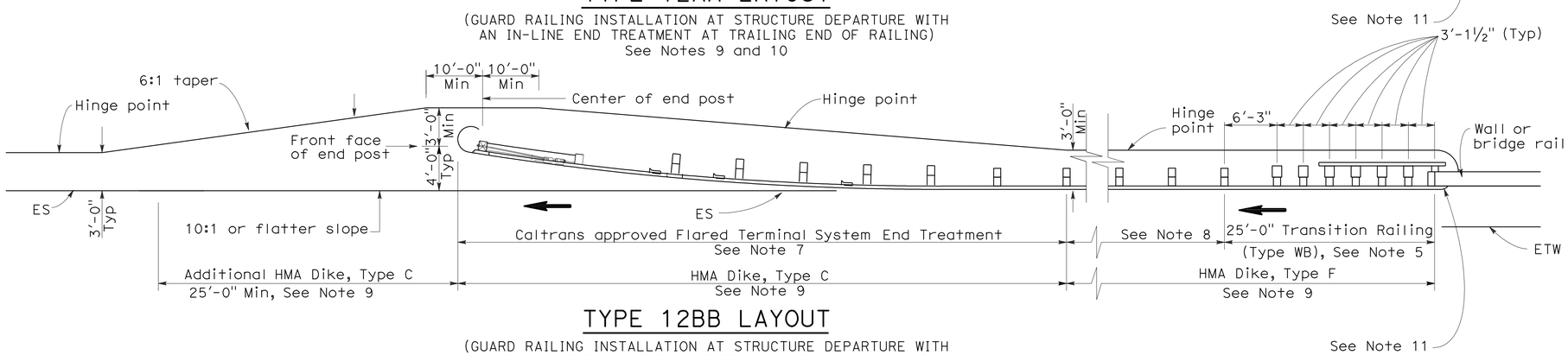


## TYPE 12BB LAYOUT

(GUARD RAILING INSTALLATION AT STRUCTURE DEPARTURE WITH A FLARED END TREATMENT AT TRAILING END OF RAILING)
See Notes 9 and 10

## NOTES:

1. Line post, blocks and hardware to be used are shown on Standard Plans A77A1, A77A2, A77B1, A77C1 and A77C2.
2. Guard rail post spacing to be 6'-3" center to center, except as otherwise noted.
3. Except as noted, line posts are 6" x 8" x 6'-0" wood with 6" x 8" x 1'-2" wood blocks. W6 x 9 steel posts, 6'-0" in length, with 6" x 8" x 1-2" notched wood blocks or notched recycled plastic blocks may be used for 6" x 8" x 6'-0" wood posts with 6" x 8" x 1'-2" wood blocks where applicable and when specified.
4. Direction of adjacent traffic indicated by ➡.
5. For Transition Railing (Type WB) details for Types 12AA and 12BB Layouts, see Standard Plan A77J4.
6. In-line Terminal System Treatments are used where site conditions will not accommodate a flared end treatment.
7. The type of terminal system to be used will be shown on the Project Plans.
8. Dependent on site conditions (embankment height, side slopes, other fixed objects), it may be advisable to construct additional guard railing (a length equal to multiples of 12'-6" with 6'-3" post spacing) between the transition railing and end treatments.
9. Where placement of dike is required with guard railing installations, see Revised Standard Plan RSP A77C4 for dike positioning details.
10. Type 12AA or Type 12BB Layouts are typically used to the right of traffic departing a structure on two-way conventional highways where the roadbed width across the structure is less than 40 feet.
11. For additional details of typical connections to bridge rail, see Connection Detail CC on Revised Standard Plan RSP A77J2 and Connection Detail HH on Standard Plans A77k2.

STATE OF CALIFORNIA
DEPARTMENT OF TRANSPORTATION

# METAL BEAM GUARD RAILING TYPICAL LAYOUTS FOR STRUCTURE DEPARTURE

NO SCALE

RSP A77F4 DATED JUNE 6, 2008 SUPERSEDES STANDARD PLAN A77F4
DATED MAY 1, 2006 - PAGE 57 OF THE STANDARD PLANS BOOK DATED MAY 2006.

**REVISED STANDARD PLAN RSP A77F4**

**2006 REVISED STANDARD PLAN RSP A77F4**

12-10-07

| DIST | COUNTY | ROUTE | POST MILES TOTAL PROJECT | SHEET NO. | TOTAL SHEETS |
|---|---|---|---|---|---|
| 01 | Hum | 101 | T0.2/R126.0 | 48 | 72 |

Randell D. Hiatt
REGISTERED CIVIL ENGINEER

June 6, 2008
PLANS APPROVAL DATE

REGISTERED PROFESSIONAL ENGINEER Randell D. Hiatt No. C50200 Exp. 6-30-09 CIVIL STATE OF CALIFORNIA

*The State of California or its officers or agents shall not be responsible for the accuracy or completeness of electronic copies of this plan sheet.*

*To accompany plans dated* 9-21-09

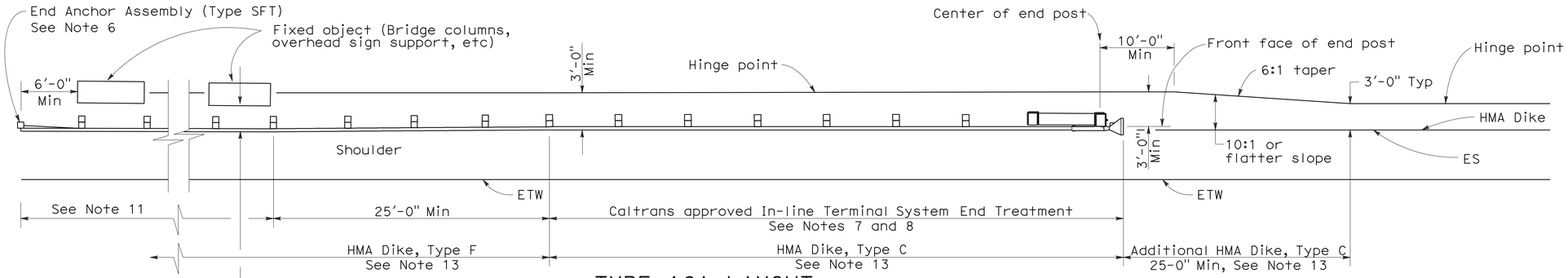


## TYPE 16A LAYOUT

(GUARD RAILING INSTALLATION AT ROADSIDE FIXED OBJECT OR OBJECTS WITH AN IN-LINE END TREATMENT AT TRAFFIC APPROACH END OF RAILING)
See Notes 12 and 13

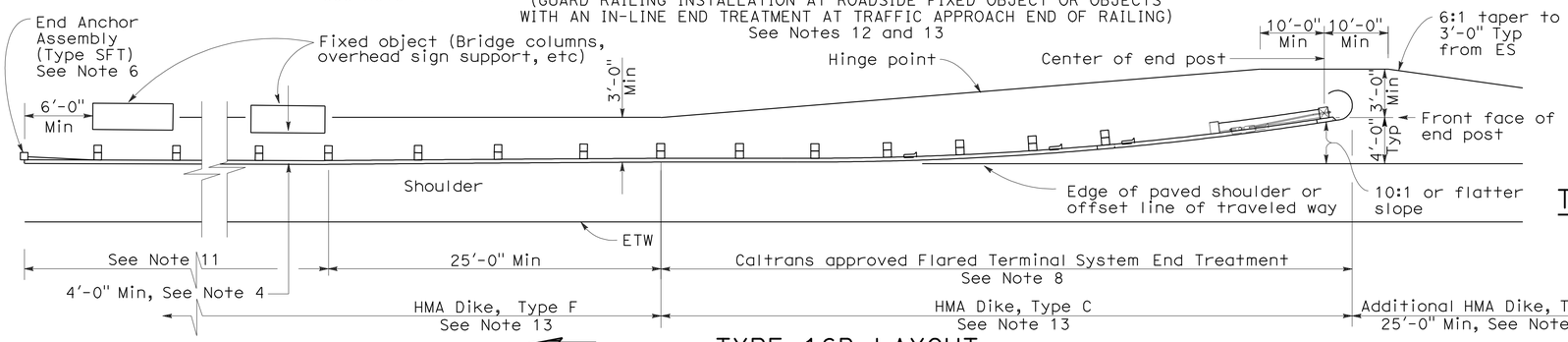


## TYPE 16B LAYOUT

(GUARD RAILING INSTALLATION AT ROADSIDE FIXED OBJECT OR OBJECTS WITH A FLARED END TREATMENT AT TRAFFIC APPROACH END OF RAILING)
See Notes 12 and 13

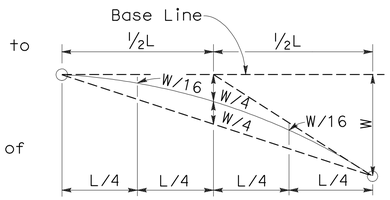


## TYPICAL PARABOLIC LAYOUT

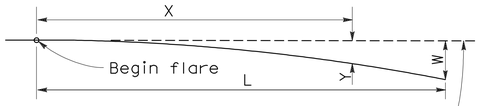


Base Line (Edge of paved shoulder or offset line of edge of traveled way)

$$Y = \frac{WX^2}{L^2}$$

Y = Offset from base line
W = Maximum offset
X = Distance along base line
L = Length of flare

## PARABOLIC FLARE OFFSETS

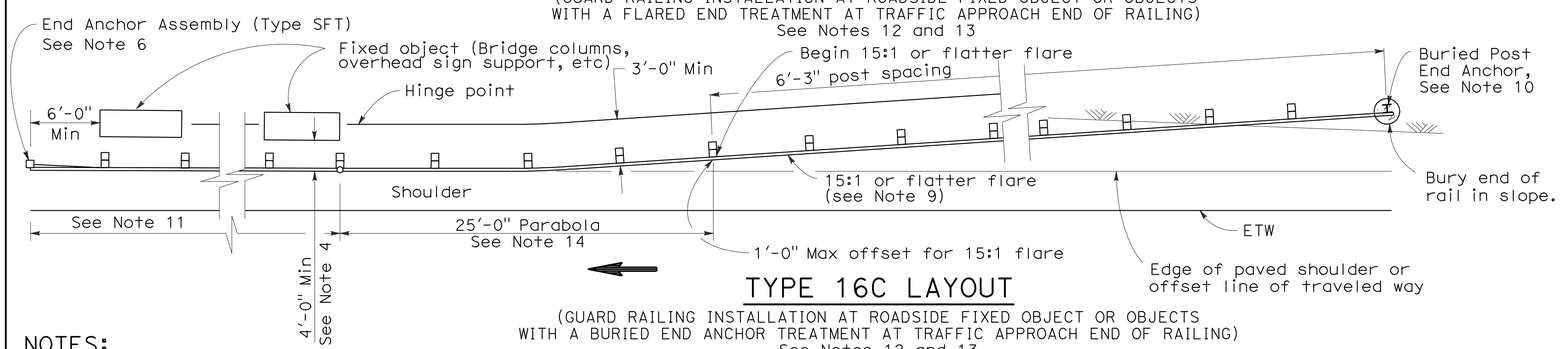


## TYPE 16C LAYOUT

(GUARD RAILING INSTALLATION AT ROADSIDE FIXED OBJECT OR OBJECTS WITH A BURIED END ANCHOR TREATMENT AT TRAFFIC APPROACH END OF RAILING)
See Notes 12 and 13

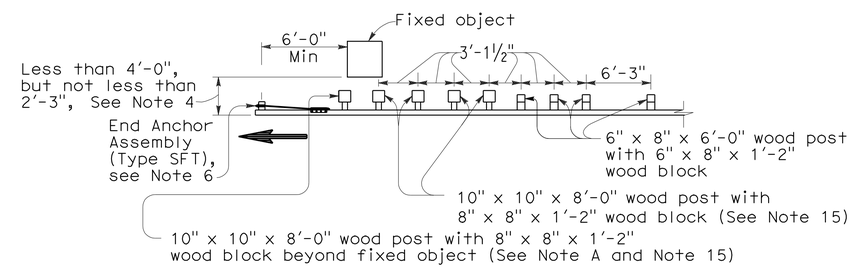


**NOTE A:** For a series of fixed objects (bridge columns, overhead sign supports, etc.) additional 10" x 10" x 8'-0" wood post with 8" x 8" x 1'-2" wood blocks at 3'-1½" center to center spacing are to be used between fixed objects.

## STRENGTHENED RAILING SECTIONS FOR FIXED OBJECT

Use strengthened railing sections with Types 16A, 16B or 16C Layouts where minimum clearance between the face of the guard railing and fixed object(s) is less than 4'-0", but not less than 2'-3". See Note 4

## NOTES:

1. Line post, blocks and hardware to be used are shown on Revised Standard Plans A77A1, A77A2, A77B1, A77C1 and A77C2.
2. Guard railing post spacing to be 6'-3" center to center, except as otherwise noted.
3. Except as noted, line posts are 6" x 8" x 6'-0" wood with 6" x 8" x 1'-2" wood blocks. W6 x 9 steel posts, 6'-0" in length, with 6" x 8" x 1'-2" notched wood blocks or notched recycled plastic blocks may be used for 6" x 8" x 6'-0" wood line posts with 6" x 8" x 1'-2" wood blocks where applicable and when specified.
4. A 4'-0" minimum clearance is required between the face of the railing and the face of a fixed object located directly behind standard guard railing sections with post spacing of 6'-3". Construct guard railing as shown in the detail "Strengthened Railing Sections for Fixed Objects" on this plan, where the clearance between the face of the railing and the face of a fixed object is less than 4'-0", but not less than 2'-3". Where the clearance is less than 2'-3", a concrete wall or barrier should be constructed to shield the fixed object(s).
5. Direction of adjacent traffic indicated by ⟶.
6. For End Anchor Assembly (Type SFT) details, see Standard Plan A77H1.
7. In-line Terminal System End Treatments are used where site conditions will not accommodate a flared end treatment.
8. The type of terminal system to be used will be shown on the Project Plans.
9. The 15:1 or flatter flare used with Type 16C Layout is based on the edge of the paved shoulder or offset line of edge of the traveled way. The length of guard railing within the 15:1 or flatter flare is based on site conditions and should be a length equal to multiples of 12'-6".
10. For details of the Buried Post End Anchor used with Type 16C Layout, see Standard Plan A77I2.
11. As site conditions dictate, construct additional guard railing to shield fixed object(s). Additional guard railing length equal to multiples of 12'-6". Post spacing at 6'-3" except as specified in Note 4.
12. Layout Types 16A, 16B or 16C are typically used where guard railing is recommended to shield roadside fixed object(s) and a crashworthy end treatment is required for only one direction of traffic.
13. Where placement of dike is required with guard railing, see Revised Standard Plan RSP A77C4 for dike positioning details.
14. For typical flare offsets for 25'-0" length parabola with maximum offset of 1'-0", see Revised Standard Plan RSP A77E1.
15. W6 x 15 steel post, 8'-0" in length, with 8" x 8" x 1'-2" notched wood block or notched recycled plastic blocks may be used in place of the 10" x 10" x 8'-0" wood post with 8" x 8" x 1'-2" wood block shown in the "Strengthened Railing Sections Detail".

STATE OF CALIFORNIA
DEPARTMENT OF TRANSPORTATION

# METAL BEAM GUARD RAILING TYPICAL LAYOUTS FOR ROADSIDE FIXED OBJECTS

NO SCALE

RSP A77G3 DATED JUNE 6, 2008 SUPERSEDES STANDARD PLAN A77G3 DATED MAY 1, 2006 - PAGE 61 OF THE STANDARD PLANS BOOK DATED MAY 2006.

**REVISED STANDARD PLAN RSP A77G3**

**2006 REVISED STANDARD PLAN RSP A77G3**

12-10-07

| DIST | COUNTY | ROUTE | POST MILES TOTAL PROJECT | SHEET NO. | TOTAL SHEETS |
|---|---|---|---|---|---|
| 01 | Hum | 101 | T0.2/R126.0 | 49 | 72 |

Randell D. Hiatt
REGISTERED CIVIL ENGINEER

June 6, 2008
PLANS APPROVAL DATE

REGISTERED PROFESSIONAL ENGINEER
Randell D. Hiatt
No. C50200
Exp. 6-30-09
CIVIL
STATE OF CALIFORNIA

*The State of California or its officers or agents shall not be responsible for the accuracy or completeness of electronic copies of this plan sheet.*

*To accompany plans dated* 9-21-09

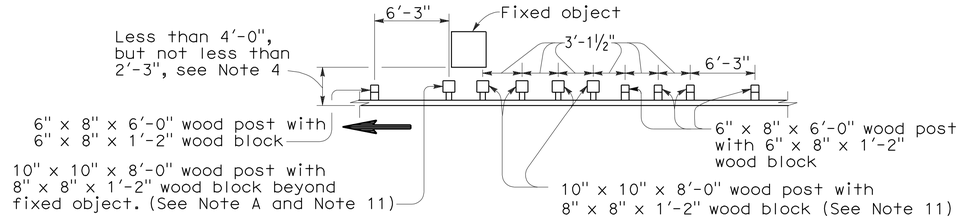


NOTE A: For a series of fixed objects (bridge columns, overhead sign supports, etc.) additional 10" x 10" x 8'-0" wood post with 8" x 8" x 1'-2" wood blocks at 3'-1½" center to center spacing are to be used between fixed object(s).

## STRENGTHENED RAILING SECTIONS FOR FIXED OBJECT

Use strengthened railing sections with Layout Types 16D or 16E where minimum clearance between the guard railing and fixed object(s) is less than 4'-0", but not less than 2'-3". See Note 4.

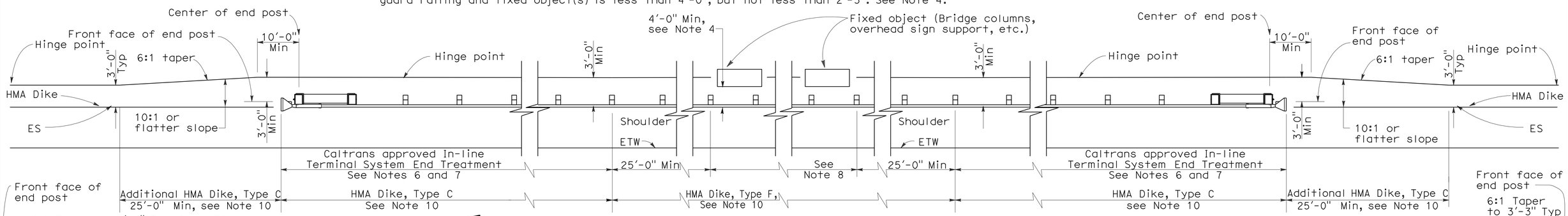


## TYPE 16D LAYOUT

(GUARD RAILING INSTALLATION AT ROADSIDE FIXED OBJECT OR OBJECTS WITH AN IN-LINE END TREATMENT AT EACH END OF RAILING)
See Note 9

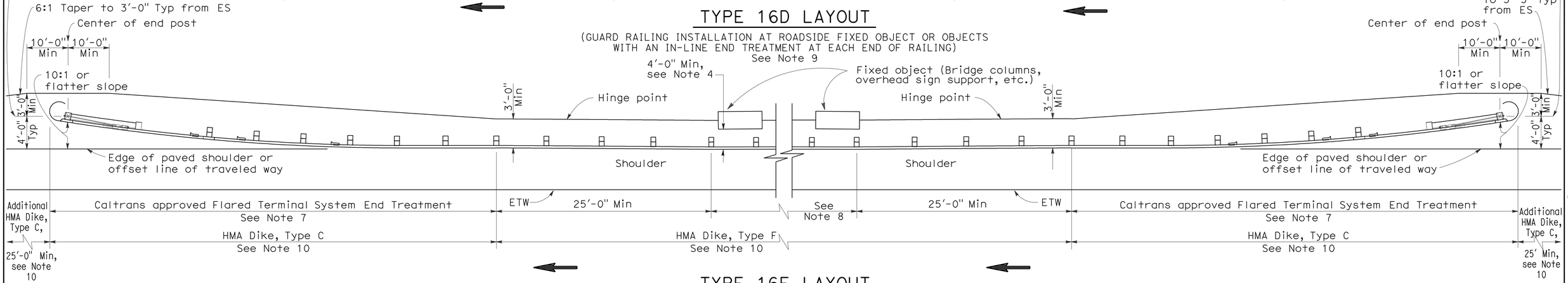


## TYPE 16E LAYOUT

(GUARD RAILING INSTALLATION AT ROADSIDE FIXED OBJECT OR OBJECTS WITH A FLARED END TREATMENT AT EACH END OF RAILING)
See Note 9

## NOTES:

1. Line post, blocks and hardware to be used are shown on Standard Plans A77A1, A77A2, A77B1, A77C1 and A77C2.
2. Guard railing post spacing to be 6'-3" center to center, except as otherwise noted.
3. Except as noted, line posts are 6" x 8" x 6'-0" wood with 6" x 8" x 1'-2" wood blocks. W6 x 9 steel posts, 6'-0" in length, with 6" x 8" x 1'-2" notched wood blocks or notched recycled plastic blocks may be used for 6" x 8" x 6'-0" wood line posts with 6" x 8" x 1'-2" wood blocks where applicable and when specified.
4. A 4'-0" minimum clearance is required between the face of the railing and the face of a fixed object located directly behind standard guard railing sections with post spacing at 6'-3". Construct guard railing as shown in the detail "Strengthened Railing Sections for Fixed Objects" on this plan, where the clearance between the face of the railing and the face of a fixed object is less than 4'-0", but not less than 2'-3". Where the clearance is less than 2'-3", a concrete wall or barrier should be constructed to shield the fixed object(s).
5. Direction of adjacent traffic indicated by ⟶ .
6. In-line Terminal System End Treatments are used where site conditions will not accommodate a flared end treatment.
7. The type of terminal system to be used will be shown on the Project Plans.
8. As site conditions dictate, construct additional guard railing to shield fixed object(s). Additional guard railing length equal to multiples of 12'-6". Post spacing at 6'-3", except as specified in Note 4.
9. Layout Types 16D through 16L, shown on the A77G Series of Revised Standard Plans, are typically used where guard railing is recommended to shield roadside fixed object(s) and a crashworthy end treatment is required for both directions of traffic.
10. Where placement of dike is required with guard railing, see Revised Standard Plan RSP A77C4 for dike positioning details.
11. W6 x 15 steel post, 8'-0" in length, with 8" x 8" x 1'-2" notched wood block or notched recycled plastic block may be used in place of the 10" x 10" x 8'-0" wood post with 8" x 8" x 1'-2" wood block shown in the "Strengthened Railing Sections Detail."

STATE OF CALIFORNIA
DEPARTMENT OF TRANSPORTATION

# METAL BEAM GUARD RAILING TYPICAL LAYOUTS FOR ROADSIDE FIXED OBJECTS

NO SCALE

RSP A77G4 DATED JUNE 6, 2008 SUPERSEDES STANDARD PLAN A77G4
DATED MAY 1, 2006 - PAGE 62 OF THE STANDARD PLANS BOOK DATED MAY 2006.

**REVISED STANDARD PLAN RSP A77G4**

**2006 REVISED STANDARD PLAN RSP A77G4**

12-10-07

| DIST | COUNTY | ROUTE | POST MILES TOTAL PROJECT | SHEET NO. | TOTAL SHEETS |
|---|---|---|---|---|---|
| 01 | Hum | 101 | T0.2/R126.0 | 50 | 72 |

Randell D. Hiatt
REGISTERED CIVIL ENGINEER

June 6, 2008
PLANS APPROVAL DATE

REGISTERED PROFESSIONAL ENGINEER
Randell D. Hiatt
No. C50200
Exp. 6-30-09
CIVIL
STATE OF CALIFORNIA

*The State of California or its officers or agents shall not be responsible for the accuracy or completeness of electronic copies of this plan sheet.*

*To accompany plans dated* 9-21-09

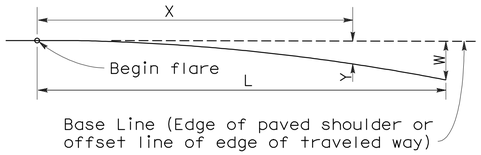


$$Y = \frac{WX^2}{L^2}$$

Y = Offset from base line
W = Maximum offset
X = Distance along base line
L = Length of flare

## PARABOLIC FLARE OFFSETS

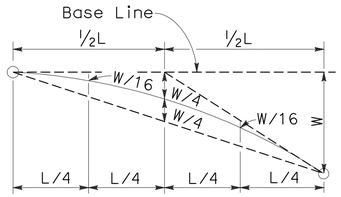


## TYPICAL PARABOLIC LAYOUT

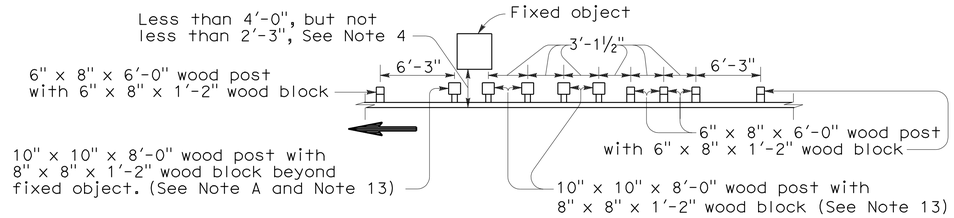


**NOTE A:** For a series of fixed objects (bridge columns, overhead sign supports, etc.) additional 10" x 10" x 8'-0" wood post with 8" x 8" x 1'-2" wood blocks at 3'-1½" center to center spacing are to be used between fixed object(s).

## STRENGTHENED RAILING SECTIONS FOR FIXED OBJECT

Use strengthened railing sections with Layout Types 16F or 16G where minimum clearance between the face of the guard railing and fixed object(s) is less than 4'-0", but not less than 2'-3". See Note 4.

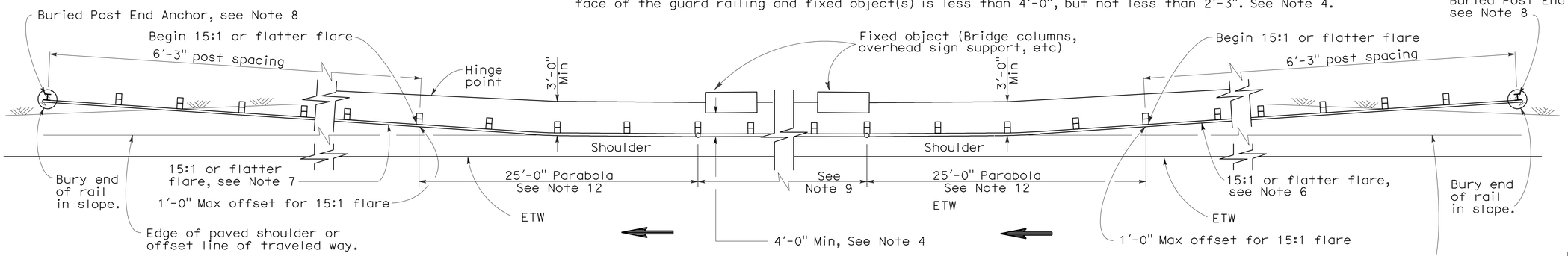


## TYPE 16F LAYOUT

(GUARD RAILING INSTALLATION AT ROADSIDE FIXED OBJECT OR OBJECTS WITH A BURIED END ANCHOR TREATMENT AT EACH END OF RAILING)
See Notes 10 and 11

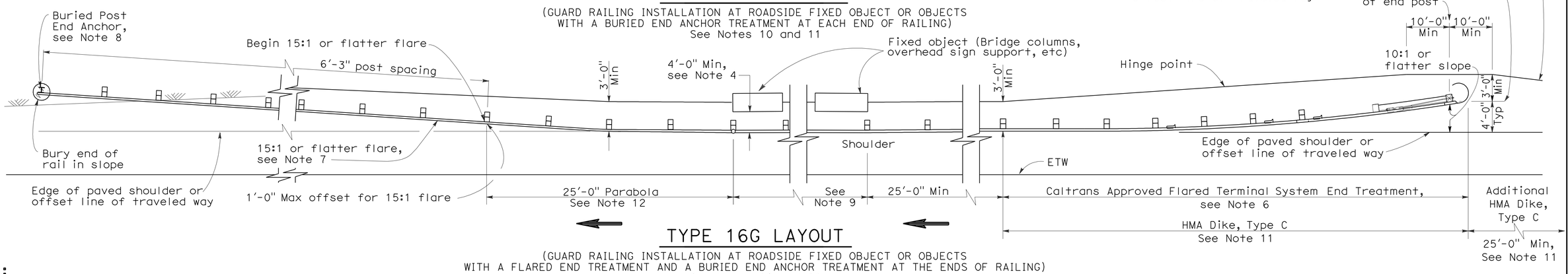


## TYPE 16G LAYOUT

(GUARD RAILING INSTALLATION AT ROADSIDE FIXED OBJECT OR OBJECTS WITH A FLARED END TREATMENT AND A BURIED END ANCHOR TREATMENT AT THE ENDS OF RAILING)
See Notes 10 and 11

## NOTES:

1. Line post, blocks and hardware to be used are shown on Standard Plans A77A1, A77A2, A77B1, A77C1 and A77C2.
2. Guard railing post spacing to be 6'-3" center to center, except as otherwise noted.
3. Except as noted, line posts are 6" x 8" x 6'-0" wood with 6" x 8" x 1'-2" wood blocks. W6 x 9 steel posts, 6'-0" in length, with 8" x 8" x 1'-2" notched wood blocks or notched recycled plastic blocks may be used for 6" x 8" x 6'-0" wood posts with 6" x 8" x 1'-2" wood blocks where applicable and when specified.
4. A 4'-0" minimum clearance is required between the face of the railing and the face of a fixed object located directly behind standard guard railing sections with post spacing at 6'-3". Construct guard railing as shown in the detail "Strengthened Railing Sections for Fixed Objects" on this plan, where the clearance between the face of the railing and the face of a fixed object is less than 4'-0", but not less than 2'-3". Where the clearance is less than 2'-3", a concrete wall or barrier should be constructed to shield the fixed object(s).
5. Direction of adjacent traffic indicated by ➡.
6. The type of terminal system to be used will be shown on the Project Plans.
7. The 15:1 or flatter flare for the buried post anchor is based on the edge of the paved shoulder or offset line of edge of the traveled way. The length of guard railing within the 15:1 or flatter flare is based on site conditions and should be a length equal to multiples of 12'-6".
8. For details of the Buried Post End Anchor details, see Standard Plan A77I2.
9. As site conditions dictate, construct additional guard railing to shield fixed object(s). Additional guard railing length equal to multiples of 12'-6". Post spacing at 6'-3", except as specified in Note 4.
10. Layout Types 16D through 16L, shown on the A77G Series of Revised Standard Plans, are typically used on highways where guard railing is recommended to shield roadside fixed object(s) and a crashworthy end treatment is required for both directions of traffic.
11. Where placement of dike is required with guard railing, see Revised Standard Plan RSP A77C4 for dike positioning details.
12. For typical flare offsets for 25'-0" length parabola with maximum offset of 1'-0", see Revised Standard Plan RSP A77E1.
13. W6 x 15 steel post, 8'-0" in length, with 8" x 8" x 1'-2" notched wood block or notched recycled plastic blocks may be used in place of the 10" x 10" x 8'-0" wood post with 8" x 8" x 1'-2" wood block shown in the "Strengthened Railing Sections Detail".

STATE OF CALIFORNIA
DEPARTMENT OF TRANSPORTATION

# METAL BEAM GUARD RAILING TYPICAL LAYOUTS FOR ROADSIDE FIXED OBJECTS

NO SCALE

RSP A77G5 DATED JUNE 6, 2008 SUPERSEDES STANDARD PLAN A77G5
DATED MAY 1, 2006 - PAGE 63 OF THE STANDARD PLANS BOOK DATED MAY 2006.

**REVISED STANDARD PLAN RSP A77G5**

**2006 REVISED STANDARD PLAN RSP A77G5**

12-10-07

| DIST | COUNTY | ROUTE | POST MILES TOTAL PROJECT | SHEET NO. | TOTAL SHEETS |
|---|---|---|---|---|---|
| 01 | Hum | 101 | T0.2/R126.0 | 51 | 72 |

Randell D. Hiatt
REGISTERED CIVIL ENGINEER

June 6, 2008
PLANS APPROVAL DATE

REGISTERED PROFESSIONAL ENGINEER
Randell D. Hiatt
No. C50200
Exp. 6-30-09
CIVIL
STATE OF CALIFORNIA

*The State of California or its officers or agents shall not be responsible for the accuracy or completeness of electronic copies of this plan sheet.*

*To accompany plans dated* 9-21-09

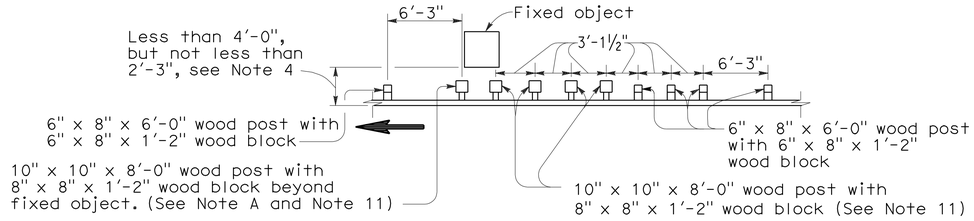


Note A. For a series of fixed objects (bridge columns, overhead sign supports, etc.) additional 10" x 10" x 8'-0" wood post with 8" x 8" x 1'-2" wood blocks at 3'-1½" center to center spacing are to be used between fixed object(s).

## STRENGTHENED RAILING SECTIONS FOR FIXED OBJECT

Use strengthened railing sections with Layout Type 16H where minimum clearance between the face of the guard railing and fixed object(s) is less than 4'-0", but not less than 2'-3". See Note 4.

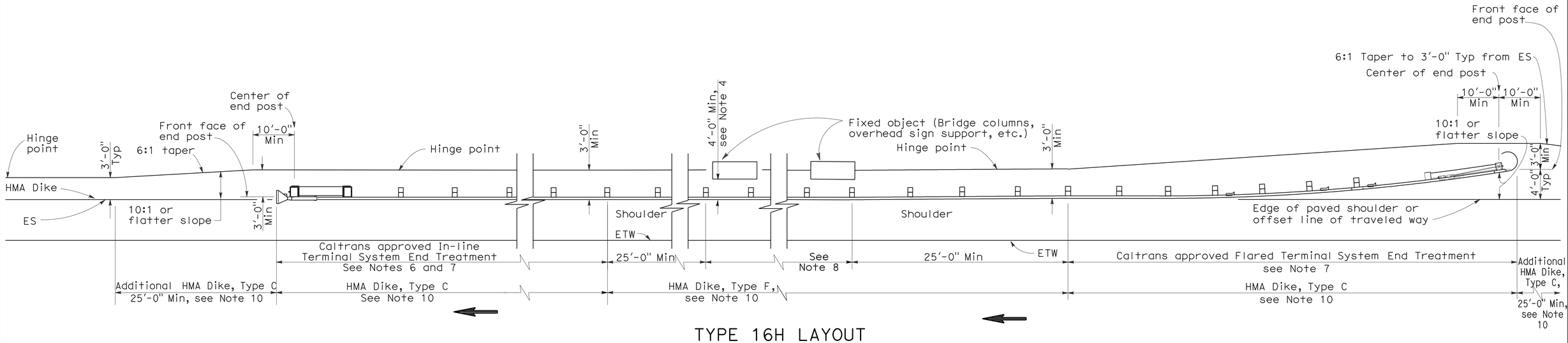


## TYPE 16H LAYOUT

(GUARD RAILING INSTALLATION AT ROADSIDE FIXED OBJECT OR OBJECTS WITH A FLARED END TREATMENT AND AN IN-LINE TREATMENT AT THE ENDS OF RAILING)
See Note 9

## NOTES:

1. Line post, blocks and hardware to be used are shown on Standard Plans A77A1, A77A2, A77B1, A77C1 and A77C2.
2. Guard railing post spacing to be 6'-3" center to center, except as otherwise noted.
3. Except as noted, line posts are 6" x 8" x 6'-0" wood with 6" x 8" x 1'-2" wood blocks. W6 x 9 steel posts, 6'-0" in length, with 6" x 8" x 1'-2" notched wood blocks or notched recycled plastic blocks may be used for 6" x 8" x 6'-0" wood posts with 6" x 8" x 1'-2" wood blocks where applicable and when specified.
4. A 4'-0" minimum clearance is required between the face of the railing and the face of a fixed object located directly behind standard guard railing sections with post spacing at 6'-3". Construct guard railing as shown in the detail "Strengthened Railing Sections for Fixed Objects" on this plan, where the clearance between the face of the railing and the face of a fixed object is less than 4'-0", but not less than 2'-3". Where the clearance is less than 2'-3", a concrete wall or barrier should be constructed to shield the fixed object(s).
5. Direction of adjacent traffic indicated by ⟶ .
6. In-line Terminal System End Treatments are used where site conditions will not accommodate a flared end treatment.
7. The type of terminal system to be used will be shown on the Project Plans.
8. As site conditions dictate, construct additional guard railing to shield fixed object(s). Additional guard railing length equal to multiples of 12'-6". Post spacing at 6'-3", except as specified in Note 4.
9. Layout Types 16D through 16L, shown on the A77G Series of Revised Standard PLans, typically used where guard railing is recommended to shield roadside fixed object(s) and a crashworthy end treatment is required for both directions of traffic.
10. Where placement of dike is required with guard railing, see Revised Standard Plan RSP A77C4 for dike positioning details.
11. W6 x 15 steel post, 8'-0" in length, with 8" x 8" x 1'-2" notched wood block or notched recycled plastic blocks may be used in place of the 10" x 10" x 8'-0" wood post with 8" x 8" x 1'-2" wood block shown in the "Strengthened Railing Sections Detail".

STATE OF CALIFORNIA
DEPARTMENT OF TRANSPORTATION

# METAL BEAM GUARD RAILING TYPICAL LAYOUTS FOR ROADSIDE FIXED OBJECTS

NO SCALE

RSP A77G6 DATED JUNE 6, 2008 SUPERSEDES STANDARD PLAN A77G6
DATED MAY 1, 2006 - PAGE 64 OF THE STANDARD PLANS BOOK DATED MAY 2006.

**REVISED STANDARD PLAN RSP A77G6**

**2006 REVISED STANDARD PLAN RSP A77G6**

12-10-07

| DIST | COUNTY | ROUTE | POST MILES TOTAL PROJECT | SHEET NO. | TOTAL SHEETS |
|---|---|---|---|---|---|
| 01 | Hum | 101 | T0.2/R126.0 | 52 | 72 |

Randell D. Hiatt
REGISTERED CIVIL ENGINEER

June 6, 2008
PLANS APPROVAL DATE

REGISTERED PROFESSIONAL ENGINEER Randell D. Hiatt No. C50200 Exp. 6-30-09 CIVIL STATE OF CALIFORNIA

*The State of California or its officers or agents shall not be responsible for the accuracy or completeness of electronic copies of this plan sheet.*

*To accompany plans dated* 9-21-09

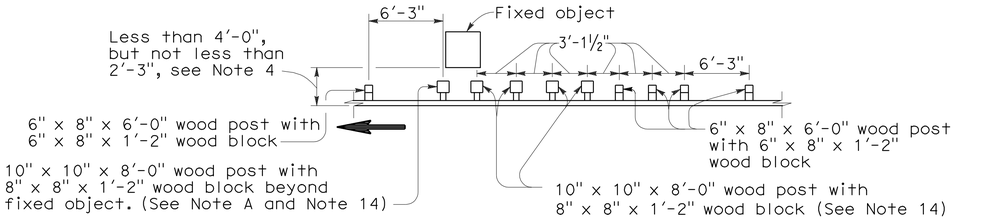


Note A. For a series of fixed objects (bridge columns, overhead sign supports, etc.) additional 10" x 10" x 8'-0" wood post with 8" x 8" x 1'-2" wood blocks at 3'-1½" center to center spacing are to be used between fixed object(s).

## STRENGTHENED RAILING SECTIONS FOR FIXED OBJECT

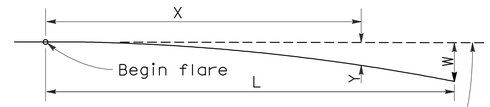


Base Line (Edge of paved shoulder or offset line of edge of traveled way)

$$Y = \frac{WX^2}{L^2}$$

Y = Offset from base line
W = Maximum offset
X = Distance along base line
L = Length of flare

## PARABOLIC FLARE OFFSETS

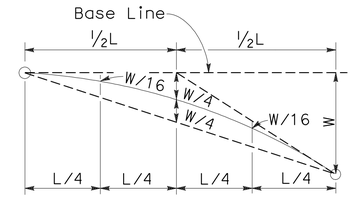


## TYPICAL PARABOLIC LAYOUT

Use strengthened railing sections with Layout Types 16I or 16J Layouts where minimum clearance between the face of the guard railing and fixed object(s) is less than 4'-0", but not less than 2'-3". See Note 4.

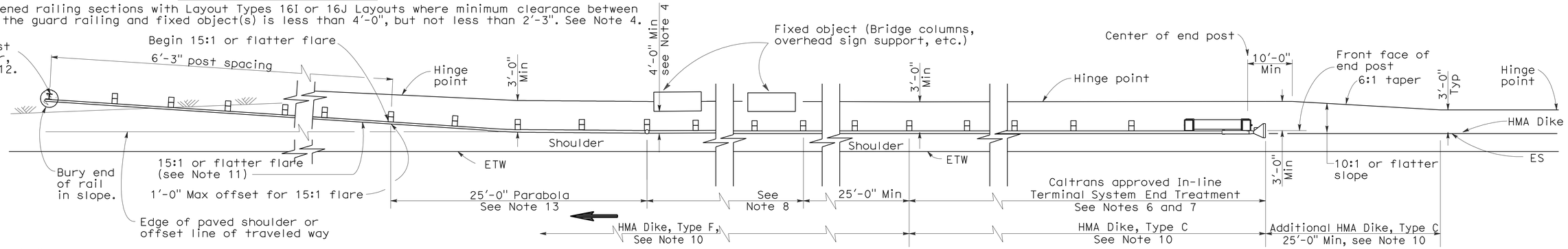


## TYPE 16I LAYOUT

(GUARD RAILING INSTALLATION AT ROADSIDE FIXED OBJECT OR OBJECTS WITH AN IN-LINE END TREATMENT AND A BURIED END ANCHOR TREATMENT AT THE ENDS OF RAILING) See Note 9

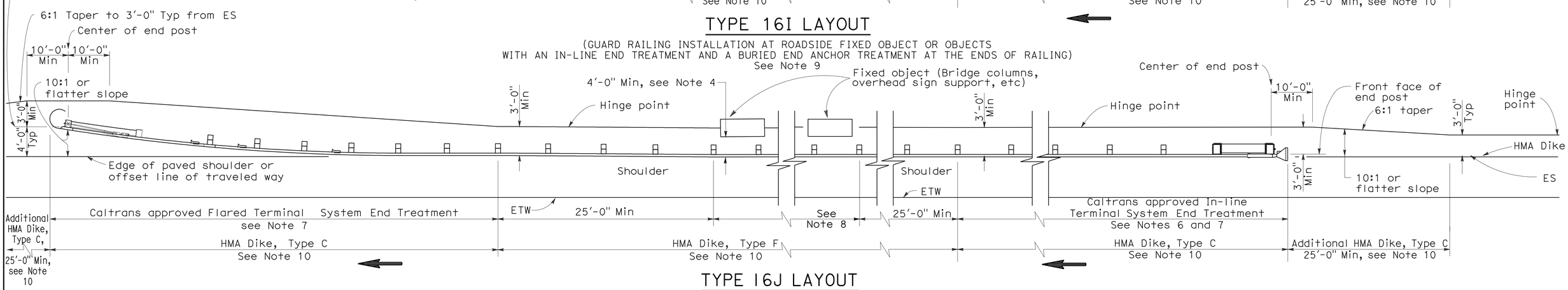


## TYPE 16J LAYOUT

(GUARD RAILING INSTALLATION AT ROADSIDE FIXED OBJECT OR OBJECTS WITH AN IN-LINE END TREATMENT AND A FLARED END TREATMENT AT THE ENDS OF RAILING) See Note 9

## NOTES:

1. Line post, blocks and hardware to be used are shown on Standard Plans A77A1, A77A2, A77B1, A77C1 and A77C2.
2. Guard railing post spacing to be 6'-3" center to center, except as otherwise noted.
3. Except as noted, line posts are 6" x 8" x 6'-0" wood with 6" x 8" x 1'-2" wood blocks. W6 x 9 steel posts, 6'-0" in length, with 6" x 8" x 1'-2" notched wood blocks or notched recycled plastic blocks may be used for 6" x 8" x 6'-0" wood posts with 6" x 8" x 1'-2" wood blocks where applicable and when specified.
4. A 4'-0" minimum clearance is required between the face of the railing and the face of a fixed object located directly behind standard guard railing sections with post spacing at 6'-3". Construct guard railing as shown in the detail "Strengthened Railing Sections for Fixed Objects" on this plan, where the clearance between the face of the railing and the face of a fixed object is less than 4'-0", but not less than 2'-3". Where the clearance is less than 2'-3", a concrete wall or barrier should be constructed to shield the fixed object(s).
5. Direction of adjacent traffic indicated by ➡.
6. In-line Terminal System End Treatments are used where site conditions will not accommodate a flared end treatment.
7. The type of terminal system to be used will be shown on the Project Plans.
8. As site conditions dictate, construct additional guard railing to shield fixed object(s). Additional guard railing length equal to multiples of 12'-6". Post spacing at 6'-3", except as specified in Note 4.
9. Layout Types 16D through 16L, shown on the A77G Series of Revised Standard Plans, are typically used where guard railing is recommended to shield roadside fixed object(s) and a crashworthy end treatment is required for both directions of traffic.
10. Where placement of dike is required with guard railing, see Revised Standard Plan RSP A77C4 for dike positioning details.
11. The 15:1 or flatter flare for the buried post anchor is based on the edge of the paved shoulder or offset line of edge of the traveled way. The length of guard railing within the 15:1 or flatter flare is based on site conditions and should be a length equal to multiples of 12'-6".
12. For details of Buried Post End Anchor details, see Standard Plan A77I2.
13. For typical flare offsets for 25'-0" length parabola with maximum offset of 1'-0", see Revised Standard RSP Plan A77E1.
14. W6 x 15 steel post, 8'-0" in length, with 8" x 8" x 1'-2" notched wood block or notched recycled plastic blocks may be used in place of the 10" x 10" x 8'-0" wood post with 8" x 8" x 1'-2" wood block shown in the "Strengthened Railing Sections Detail".

STATE OF CALIFORNIA
DEPARTMENT OF TRANSPORTATION

# METAL BEAM GUARD RAILING TYPICAL LAYOUTS FOR ROADSIDE FIXED OBJECTS

NO SCALE

RSP A77G7 DATED JUNE 6, 2008 SUPERSEDES STANDARD PLAN A77G7 DATED MAY 1, 2006 - PAGE 65 OF THE STANDARD PLANS BOOK DATED MAY 2006.

**REVISED STANDARD PLAN RSP A77G7**

**2006 REVISED STANDARD PLAN RSP A77G7**

12-10-07

| DIST | COUNTY | ROUTE | POST MILES TOTAL PROJECT | SHEET NO. | TOTAL SHEETS |
|---|---|---|---|---|---|
| 01 | Hum | 101 | T0.2/R126.0 | 53 | 72 |

Randell D. Hiatt
REGISTERED CIVIL ENGINEER

June 6, 2008
PLANS APPROVAL DATE

REGISTERED PROFESSIONAL ENGINEER Randell D. Hiatt No. C50200 Exp. 6-30-09 CIVIL STATE OF CALIFORNIA

*The State of California or its officers or agents shall not be responsible for the accuracy or completeness of electronic copies of this plan sheet.*

*To accompany plans dated* 9-21-09

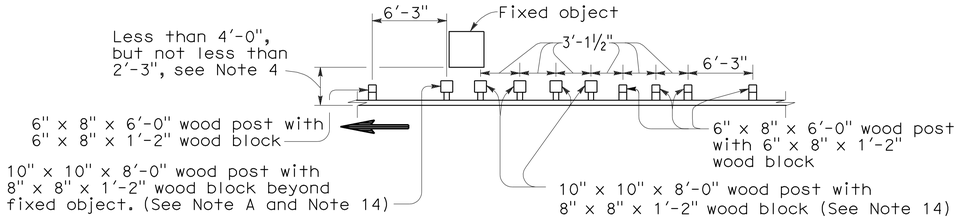


Note A. For a series of fixed objects (bridge columns, overhead sign supports, etc.) additional 10" x 10" x 8'-0" wood post with 8" x 8" x 1'-2" wood blocks at 3'-1½" center to center spacing are to be used between fixed object(s).

## STRENGTHENED RAILING SECTIONS FOR FIXED OBJECT

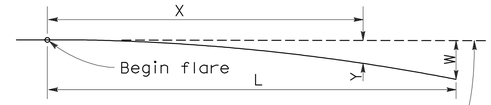


Base Line (Edge of paved shoulder or offset line of edge of traveled way)

$$Y = \frac{WX^2}{L^2}$$

Y = Offset from base line
W = Maximum offset
X = Distance along base line
L = Length of flare

## PARABOLIC FLARE OFFSETS

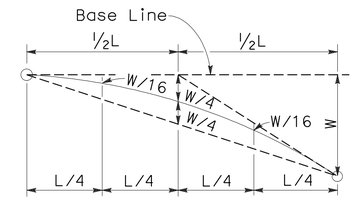


## TYPICAL PARABOLIC LAYOUT

Use strengthened railing sections with Layout Types 16K or 16L Layouts where minimum clearance between the face of the guard railing and fixed object(s) is less than 4'-0", but not less than 2'-3". See Note 4.

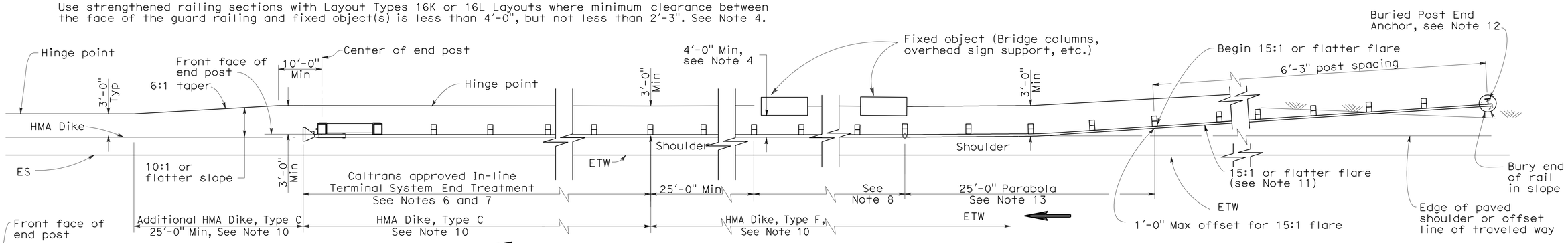


## TYPE 16K LAYOUT

(GUARD RAILING INSTALLATION AT ROADSIDE FIXED OBJECT OR OBJECTS WITH A BURIED END ANCHOR TREATMENT AND AN IN-LINE END TREATMENT AT THE ENDS OF RAILING) See Note 9

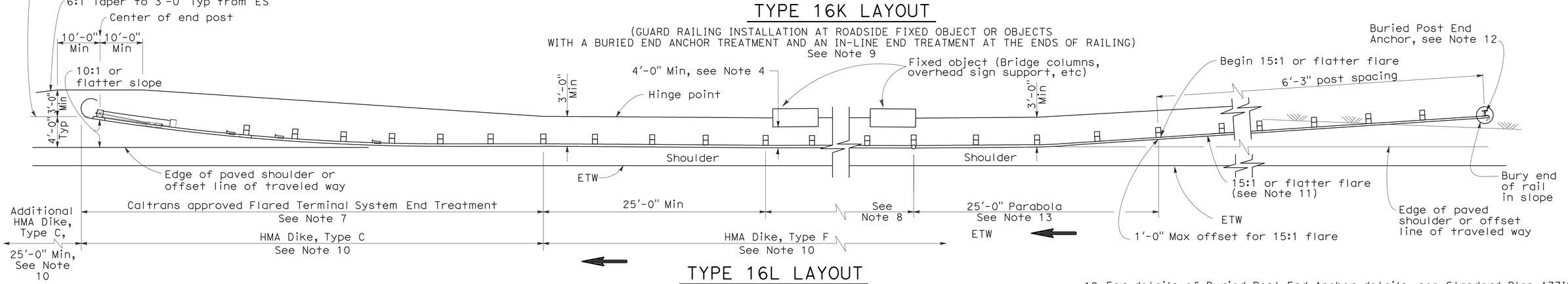


## TYPE 16L LAYOUT

(GUARD RAILING INSTALLATION AT ROADSIDE FIXED OBJECT OR OBJECTS WITH A BURIED END ANCHOR TREATMENT AND A FLARED END TREATMENT AT THE ENDS OF RAILING) See Note 9

## NOTES:

1. Line post, blocks and hardware to be used are shown on Standard Plans A77A1, A77A2, A77B1, A77C1 and A77C2.
2. Guard railing post spacing to be 6'-3" center to center, except as otherwise noted.
3. Except as noted, line posts are 6" x 8" x 6'-0" wood with 6" x 8" x 1'-2" wood blocks. W6 x 9 steel posts, 6'-0" in length, with 6" x 8" x 1'-2" notched wood blocks or notched recycled plastic blocks may be used for 6" x 8" x 6'-0" wood posts with 6" x 8" x 1'-2" wood blocks where applicable and when specified.
4. A 4'-0" minimum clearance is required between the face of the railing and the face of a fixed object located directly behind standard guard railing sections with post spacing at 6'-3". Construct guard railing as shown in the detail "Strengthened Railing Sections for Fixed Objects" on this plan, where the clearance between the face of the railing and the face of a fixed object is less than 4'-0", but not less than 2'-3". Where the clearance is less than 2'-3", a concrete wall or barrier should be constructed to shield the fixed object(s).
5. Direction of adjacent traffic indicated by ⟶.
6. In-line Terminal System End Treatments are used where site conditions will not accommodate a flared end treatment.
7. The type of terminal system to be used will be shown on the Project Plans.
8. As site conditions dictate, construct additional guard railing to shield fixed object(s). Additional guard railing length equal to multiples of 12'-6". Post spacing at 6'-3", except as specified in Note 4.
9. Layout Types 16D through 16L, shown on the A77G Series of Revised Standard Plans are typically used where guard railing is recommended to shield roadside fixed object(s) and a crashworthy end treatment is required for both directions of traffic.
10. Where placement of dike is required with guard railing, see Revised Standard Plan RSP A77C4 for dike positioning details.
11. The 15:1 or flatter flare for the buried post anchor is based on the edge of the paved shoulder or offset line of edge of the traveled way. The length of guard railing within the 15:1 or flatter flare is based on site conditions and should be a length equal to multiples of 12'-6".
12. For details of Buried Post End Anchor details, see Standard Plan A77I2.
13. For typical flare offsets for 25'-0" length parabola with maximum offset of 1'-0", see Revised Standard RSP Plan A77E1.
14. W6 x 15 steel post, 8'-0" in length, with 8" x 8" x 1'-2" notched wood block or notched recycled plastic blocks may be used in place of the 10" x 10" x 8'-0" wood post with 8" x 8" x 1'-2" wood block shown in the "Strengthened Railing Sections Detail".

STATE OF CALIFORNIA
DEPARTMENT OF TRANSPORTATION

# METAL BEAM GUARD RAILING TYPICAL LAYOUTS FOR ROADSIDE FIXED OBJECTS

NO SCALE

RSP A77G8 DATED JUNE 6, 2008 SUPERSEDES STANDARD PLAN A77G8
DATED MAY 1, 2006 - PAGE 66 OF THE STANDARD PLANS BOOK DATED MAY 2006.

**REVISED STANDARD PLAN RSP A77G8**

**2006 REVISED STANDARD PLAN RSP A77G8**

12-10-07

| DIST | COUNTY | ROUTE | POST MILES TOTAL PROJECT | SHEET NO. | TOTAL SHEETS |
|---|---|---|---|---|---|
| 01 | Hum | 101 | T0.2/R126.0 | 54 | 72 |

Randell D. Hiatt
REGISTERED CIVIL ENGINEER

June 6, 2008
PLANS APPROVAL DATE

REGISTERED PROFESSIONAL ENGINEER
Randell D. Hiatt
No. C50200
Exp. 6-30-09
CIVIL
STATE OF CALIFORNIA

*The State of California or its officers or agents shall not be responsible for the accuracy or completeness of electronic copies of this plan sheet.*

*To accompany plans dated* 9-21-09

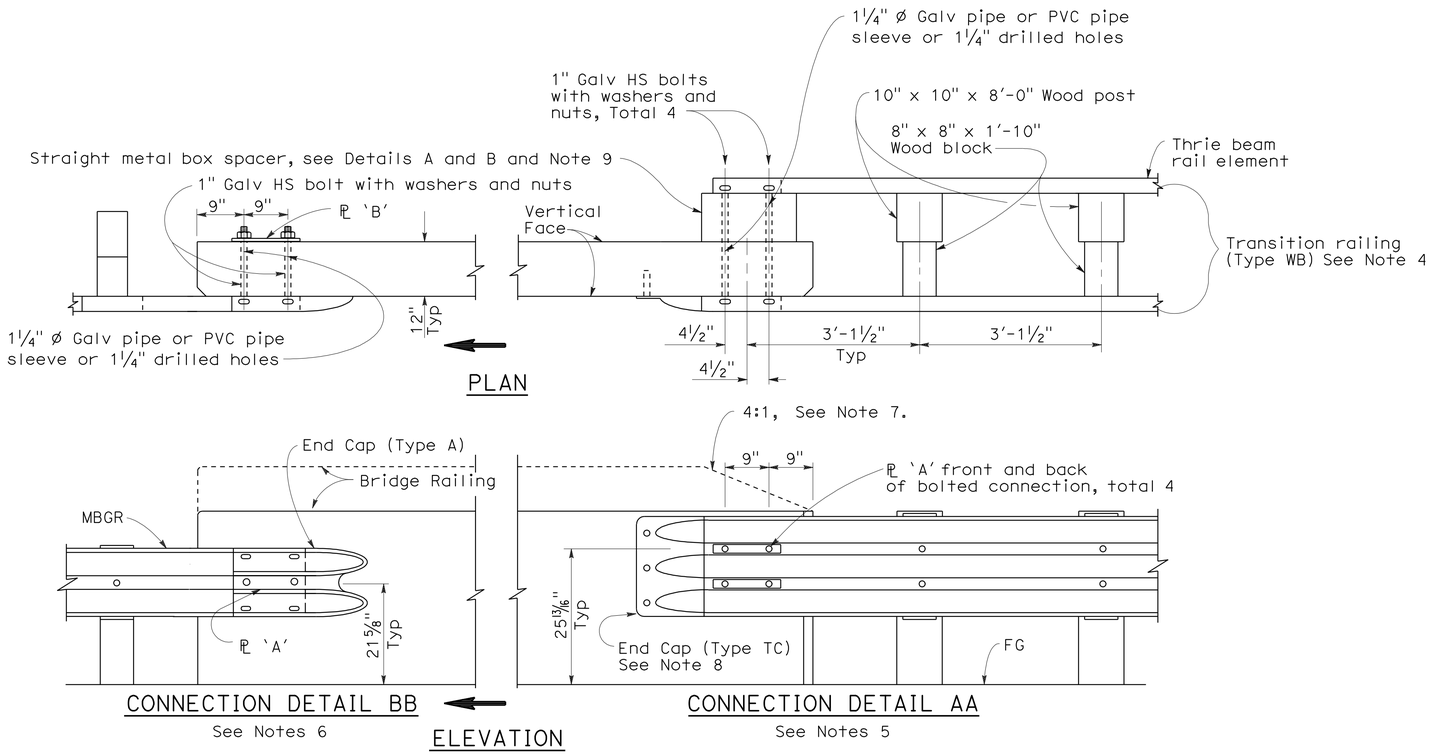


GUARD RAILING CONNECTION TO BRIDGE RAILING WITHOUT SIDEWALK

## NOTES:

1. See Revised Standard Plan RSP A77J2 for additional connection details to bridges without sidewalks.
2. Additional details of posts, blocks and hardware are shown on Standard Plan A77B1, A77C1 and A77C2.
3. Direction of adjacent traffic indicated by ➡.
4. For additional details of Transition Railing (Type WB), see Standard Plan A77J4. Transition Railing (Type WB) transitions the 12 gage w-beam standard railing section of guard railing to a heavier gage nested thrie beam railing section which is connected to the concrete bridge railing.
5. For typical use of Connection Detail AA, see Layout Types 12A and 12B on Revised Standard Plan RSP A77F1, Layout Types 12C and 12D on Standard Plan A77F2, and Layout Type 12E on Revised Standard Plan RSP A77F3.
6. For typical use of Connection Detail BB, see Layout Type 12D (structure departure railing connection) on Standard Plan A77F2 and Layout Type 12DD on Standard Plan A77F5.
7. Where the height of the bridge railing exceeds the height of the thrie beam railing by more than 1" at Connection Detail AA, taper the top of the end of the bridge railing at 4:1 to match the top elevation of the thrie beam rail.
8. For details of End Cap (Type TC), see Standard Plan A77J4.
9. See Standard Plan A77J4 for additional details regarding depth dimension for straight metal box spacer.

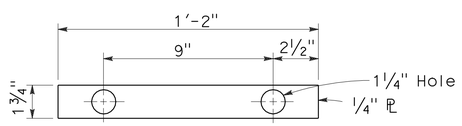


PLATE 'A'

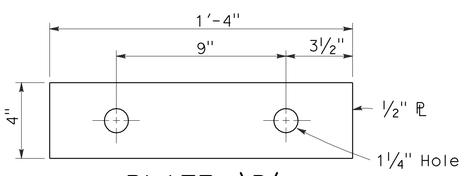


PLATE 'B'
(For backside of connection BB)

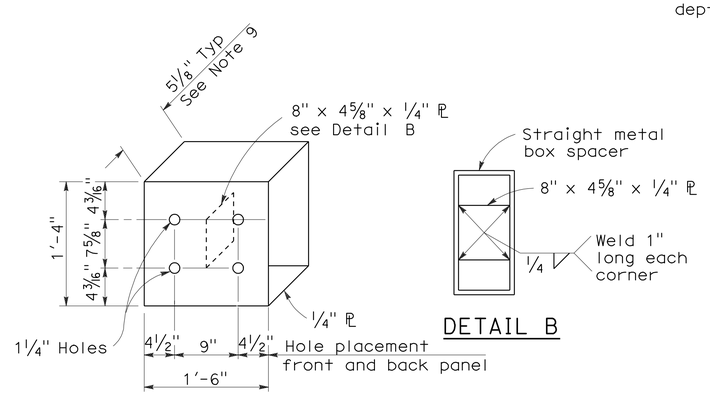


DETAIL A

DETAIL B

STRAIGHT METAL BOX SPACER

STATE OF CALIFORNIA
DEPARTMENT OF TRANSPORTATION

# METAL BEAM GUARD RAILING CONNECTIONS TO BRIDGE RAILINGS WITHOUT SIDEWALKS DETAILS No.1

NO SCALE

RSP A77J1 DATED JUNE 6, 2008 SUPERSEDES STANDARD PLAN A77J1
DATED MAY 1, 2006 - PAGE 72 OF THE STANDARD PLANS BOOK DATED MAY 2006.

**REVISED STANDARD PLAN RSP A77J1**

**2006 REVISED STANDARD PLAN RSP A77J1**

12-10-07

| DIST | COUNTY | ROUTE | POST MILES TOTAL PROJECT | SHEET NO. | TOTAL SHEETS |
|---|---|---|---|---|---|
| 01 | Hum | 101 | T0.2/R126.0 | 55 | 72 |

Randell D. Hiatt
REGISTERED CIVIL ENGINEER

June 6, 2008
PLANS APPROVAL DATE

REGISTERED PROFESSIONAL ENGINEER
Randell D. Hiatt
No. C50200
Exp. 6-30-09
CIVIL
STATE OF CALIFORNIA

*The State of California or its officers or agents shall not be responsible for the accuracy or completeness of electronic copies of this plan sheet.*

*To accompany plans dated* 9-21-09

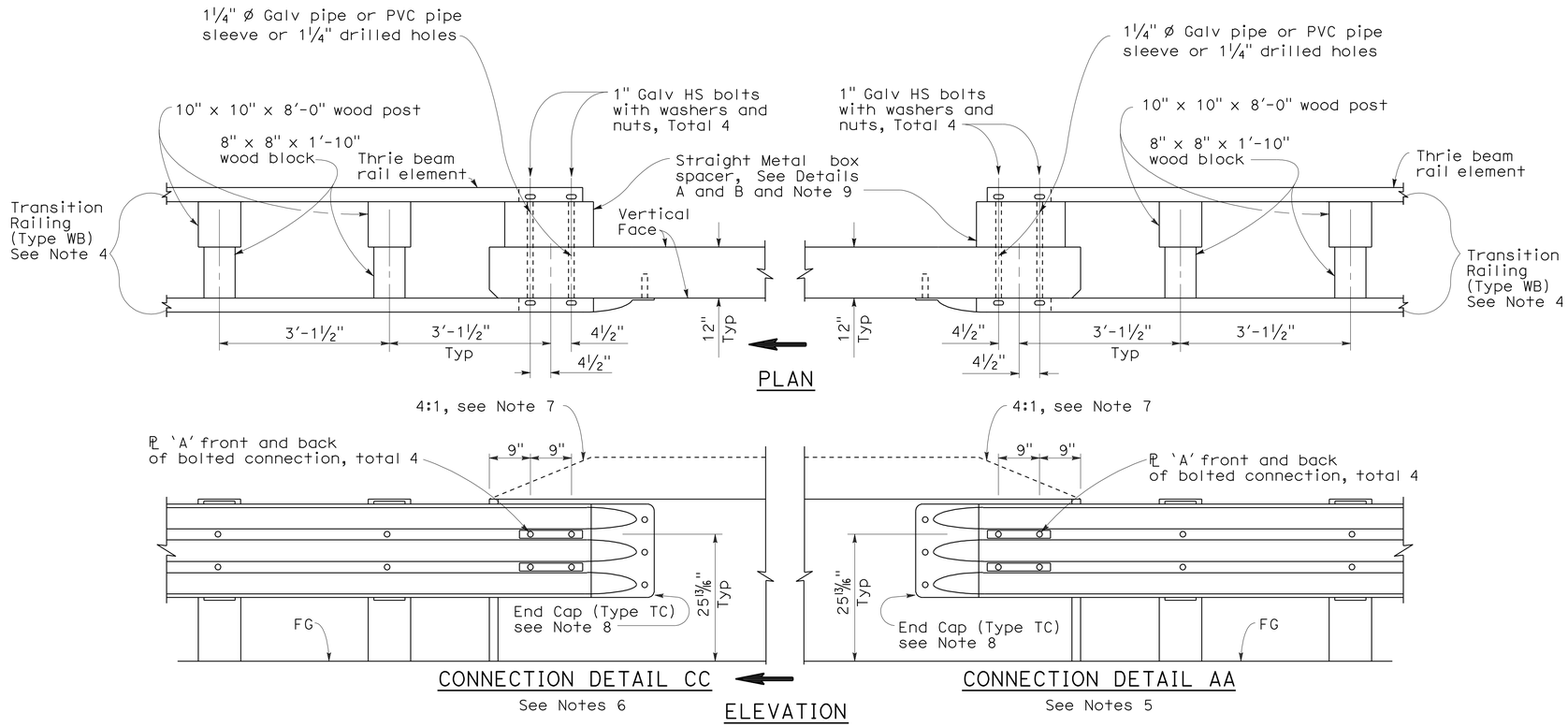


GUARD RAILING CONNECTION TO BRIDGE RAILING WITHOUT SIDEWALK

## NOTES:

1. See Revised Standard Plan RSP A77J1 for additional connection details to bridges without sidewalks.
2. Additional details of posts, blocks and hardware are shown on Standard Plan A77B1, A77C1 and A77C2.
3. Direction of adjacent traffic indicated by ⟹.
4. For additional details of Transition Railing (Type WB), see Standard Plan A77J4. Transition Railing (Type WB) transitions the 12 gage w-beam standard railing section of guard railing to a heavier gage nested thrie beam railing section which is connected to the concrete bridge railing.
5. For typical use of Connection Detail AA, see Layout Types 12A and 12B on Revised Standard Plan RSP A77F1, Layout Types 12C and 12D on Standard Plan A77F2, and Layout Type 12E on Revised Standard Plan RSP A77F3.
6. For typical use of Connection Detail CC, see Layout Types 12AA and 12BB on Standard Plan A77F4 and Layout Type 12CC on Standard Plan A77F5.
7. Where the height of the bridge railing exceeds the height of the thrie beam railing by more than 1" at Connection Detail AA and connection Detail CC, taper the top of the end of the bridge railing at 4:1 to match the top elevation of the thrie beam railing.
8. For details of End Cap (Type TC), see Standard Plans A77J4.
9. See Standard Plans A77J4 for additional details regarding depth dimension for straight metal box spacer.

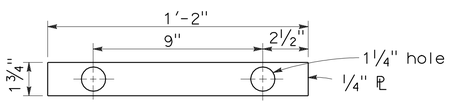


PLATE 'A'

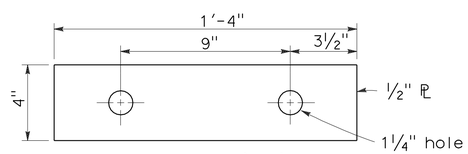


PLATE 'B'
(For backside of connection BB)

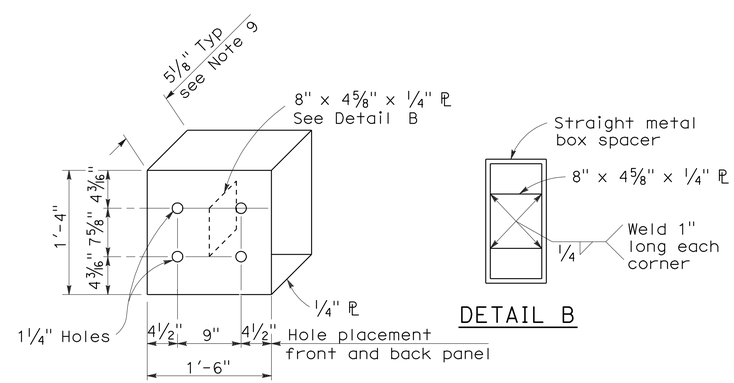


DETAIL A

DETAIL B

STRAIGHT METAL BOX SPACER

STATE OF CALIFORNIA
DEPARTMENT OF TRANSPORTATION

# METAL BEAM GUARD RAILING CONNECTIONS TO BRIDGE RAILINGS WITHOUT SIDEWALKS DETAILS No.2

NO SCALE

RSP A77J2 DATED JUNE 6, 2008 SUPERSEDES STANDARD PLAN A77J2 DATED MAY 1, 2006 - PAGE 73 OF THE STANDARD PLANS BOOK DATED MAY 2006.

**REVISED STANDARD PLAN RSP A77J2**

**2006 REVISED STANDARD PLAN RSP A77J2**

12-10-07

| DIST | COUNTY | ROUTE | POST MILES TOTAL PROJECT | SHEET NO. | TOTAL SHEETS |
|---|---|---|---|---|---|
| 01 | Hum | 101 | T0.2/R126.0 | 56 | 72 |

Randell D. Hiatt
REGISTERED CIVIL ENGINEER

June 5, 2009
PLANS APPROVAL DATE

REGISTERED PROFESSIONAL ENGINEER Randell D. Hiatt No. C50200 Exp. 6-30-09 CIVIL STATE OF CALIFORNIA

*The State of California or its officers or agents shall not be responsible for the accuracy or completeness of electronic copies of this plan sheet.*

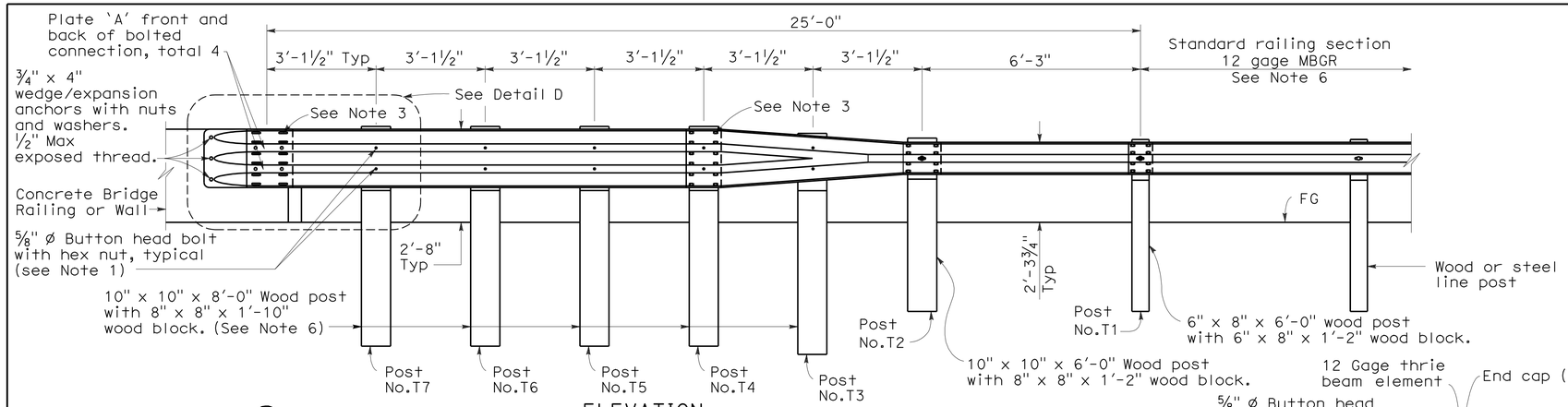


ELEVATION

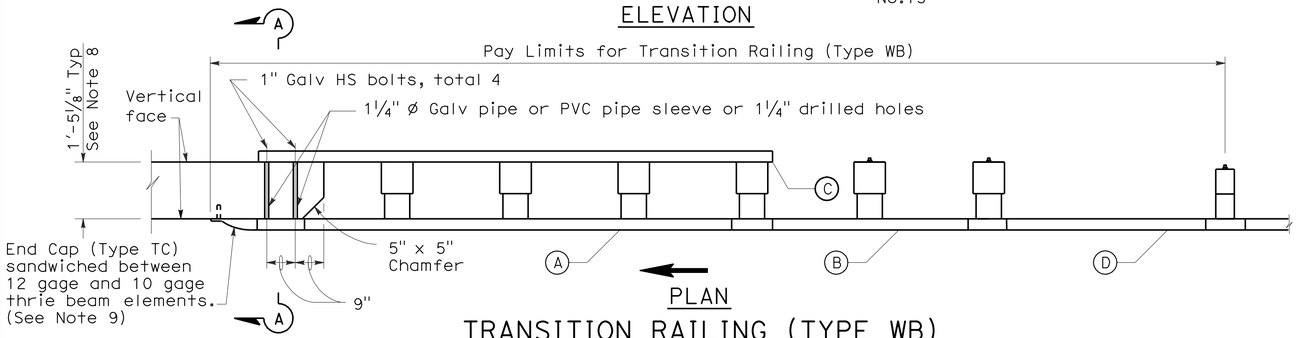


PLAN

TRANSITION RAILING (TYPE WB)

(No Blockout Attachment)

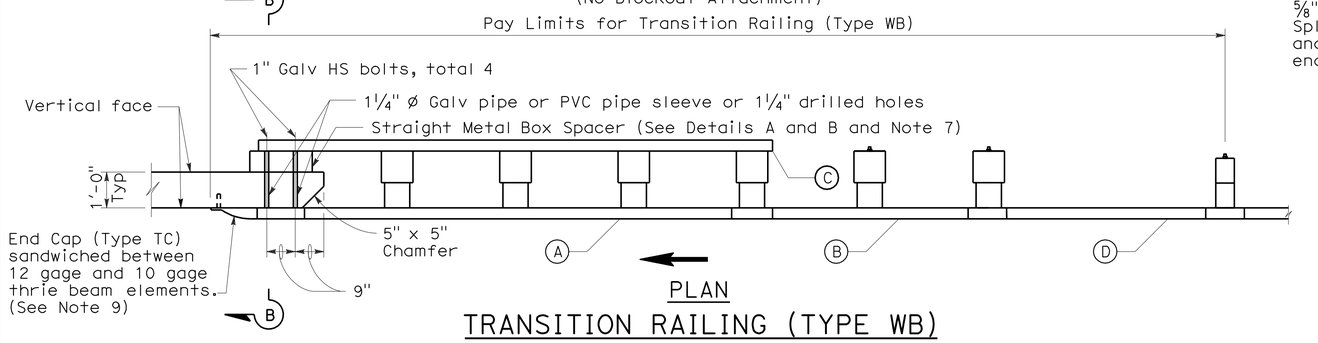


PLAN

TRANSITION RAILING (TYPE WB)

(Blockout Attachment)

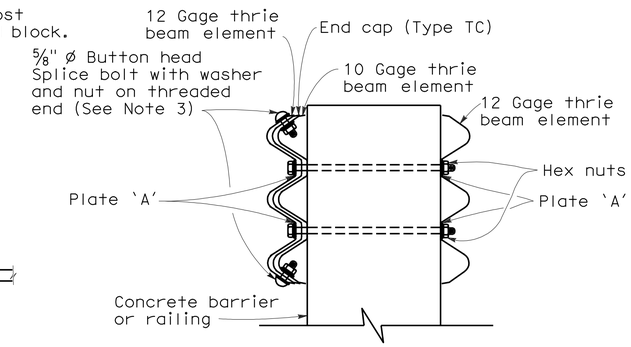


SECTION A-A

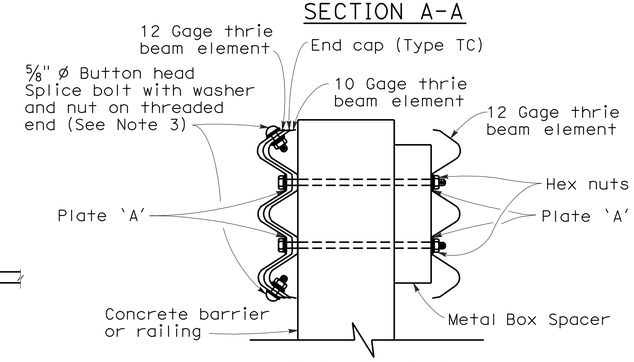


SECTION B-B

## NOTES:

*To accompany plans dated* 9-21-09

1. Use 5/8 " Ø Button head bolts and hex nuts for connections to posts. No washer on rail face for bolted connections to post.
2. The nested rail elements, end cap, and 'W' beam to thrie beam element may be spliced together prior to bolting the elements to the wood post and concrete barrier or railing.
3. Exterior splice bolt holes for rail element splices at Post No.T4 and the connection to the concrete barrier or railing shall be the standard 29/32 " x 1 1/8 " slot size. Interior splice bolt holes at these locations may be increased up to 1 1/4 " Ø. Only the top 2 and the bottom 2 splice bolts with washers and nuts are required for rail splices at Post No.T4 and the connection to the concrete barrier or railing.
4. Direction of adjacent traffic indicated by →.
5. The top elevation of Post Nos.T2 through T7 shall not project more than 1" above the top elevation of the rail element.
6. Typically, the railing connected to Transition Railing (Type WB) will be either standard railing section of metal beam guard railing or an approved Caltrans end treatment attached to Post No.T1.
7. The depth of the metal box spacer varies from the 5 1/8 " to 1 1/2 " and is dependent on the width of the concrete railing or wall. The combined dimension for the depth of the metal box spacer plus the width of railing or wall is typically 17 1/8 ". Where the space between the backside of the concrete railing or wall and the rear thrie beam element is less than 1 1/2 ", metal plates similar to Plate 'A' are to be used as spacers.
8. Where the width of the concrete railing or wall is greater than 17 1/8 ", wood blocks are to be used to fill the space created between the backside of Posts No.4 through No.7 and the rear thrie beam element. These wood blocks shall be 8" in width and 1'-2" in length. The dimension between the front thrie beam element and the rear thrie beam element is to match the width of the concrete railing or wall.
9. End cap may be installed over 12 gage and 10 gage thrie beam elements where transition railing is installed on the departure end of bridge railing.

## LEGEND

(A) Nested thrie beam elements (one 12 gage element nested over one 10 gage element).

(B) One 10 gage "W" beam to thrie beam element.

(C) One 12 gage thrie beam element.

(D) One 10 gage "W" beam rail element (7'-3½" length)

10 gage = 0.135" thick

12 gage = 0.108" thick

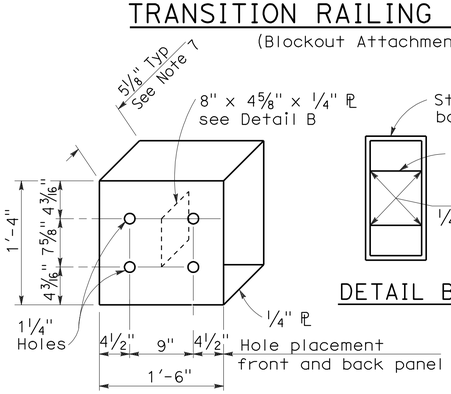


DETAIL A

STRAIGHT METAL BOX SPACER

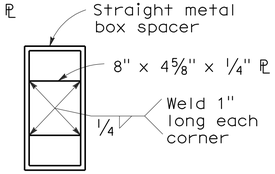


DETAIL B

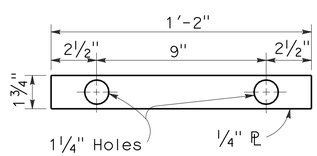


DETAIL C

PLATE 'A'

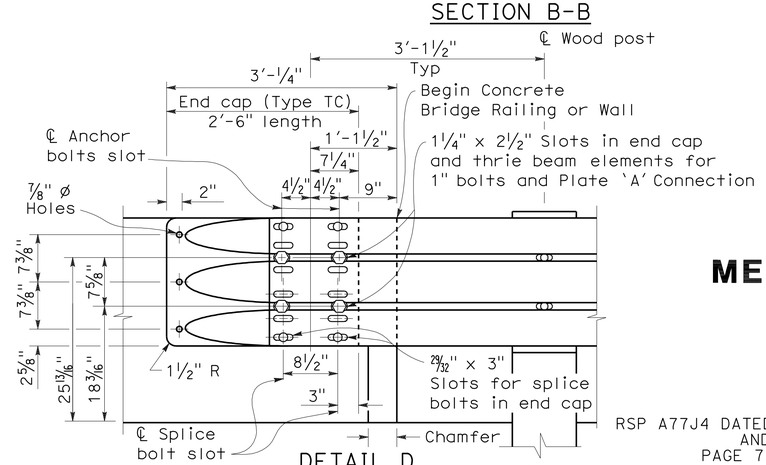


DETAIL D

STATE OF CALIFORNIA
DEPARTMENT OF TRANSPORTATION

# METAL BEAM GUARD RAILING TRANSITION RAILING (TYPE WB)

NO SCALE

RSP A77J4 DATED JUNE 5, 2009 SUPERSEDES RSP A77J4 DATED JUNE 6, 2008 AND STANDARD PLAN A77J4 DATED MAY 1, 2006 - PAGE 75 OF THE STANDARD PLANS BOOK DATED MAY 2006.

**REVISED STANDARD PLAN RSP A77J4**

**2006 REVISED STANDARD PLAN RSP A77J4**

5-14-09

| DIST | COUNTY | ROUTE | POST MILES TOTAL PROJECT | SHEET NO. | TOTAL SHEETS |
|---|---|---|---|---|---|
| 01 | Hum | 101 | T0.2/R126.0 | 57 | 72 |

Randell D. Hiatt
REGISTERED CIVIL ENGINEER

June 6, 2008
PLANS APPROVAL DATE

REGISTERED PROFESSIONAL ENGINEER
Randell D. Hiatt
No. C50200
Exp. 6-30-09
CIVIL
STATE OF CALIFORNIA

*The State of California or its officers or agents shall not be responsible for the accuracy or completeness of electronic copies of this plan sheet.*

*To accompany plans dated* 9-21-09

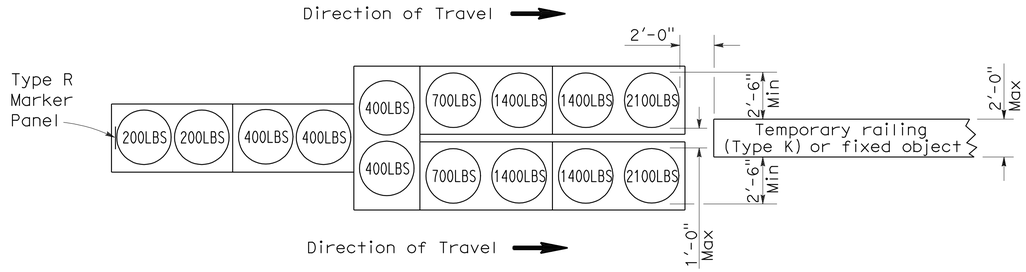


## ARRAY 'TU14'

Approach speed 45 mph or more

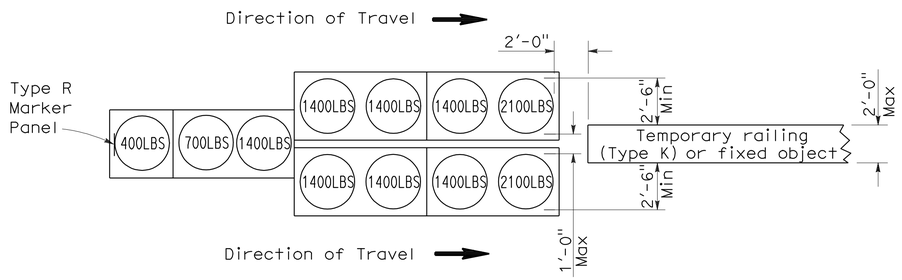


## ARRAY 'TU11'

Approach speed less than 45 mph

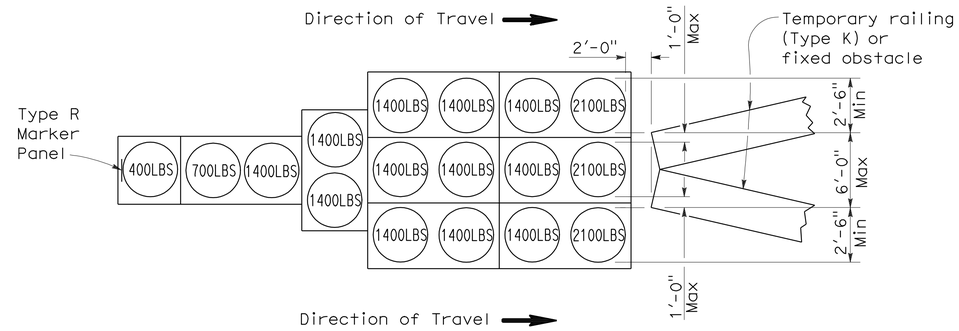


## ARRAY 'TU17'

Approach speed less than 45 mph

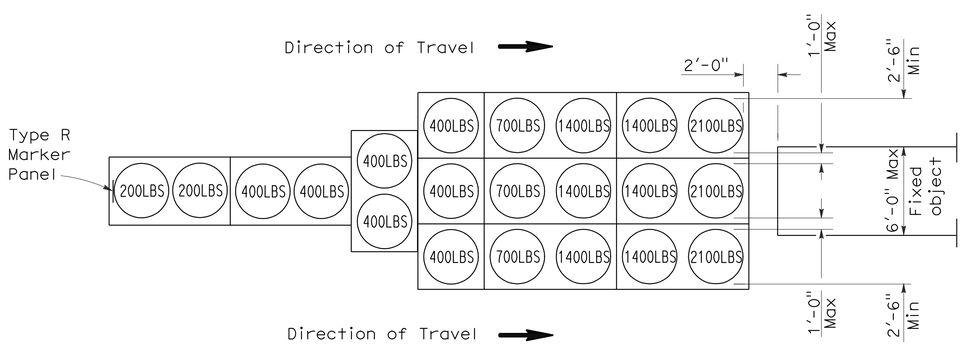


## ARRAY 'TU21'

Approach speed 45 mph or more

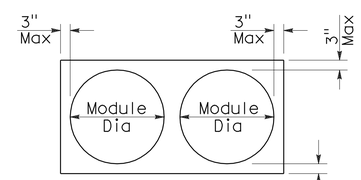


## PLAN

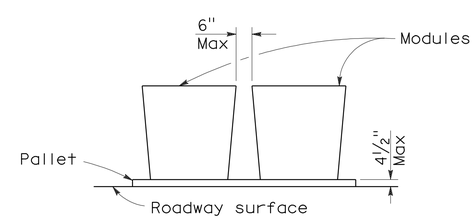


## ELEVATION

## CRASH CUSHION PALLET DETAIL

See Note 7

## NOTES:

1. (XXX) Indicates sand filled module location and weight of sand in pounds for each module. Module spacing is based on the greater diameter of the module.
2. All sand weights are nominal.
3. Temporary crash cushion arrays shall not encroach on the traveled way.
4. Place the top of Type R marker panel 1" below the module lid.
5. Refer to Standard Plan A73B for marker details.
6. Approach speeds indicated conform to NCHRP 350 Report criteria.
7. Use of pallets is optional.

STATE OF CALIFORNIA
DEPARTMENT OF TRANSPORTATION

# TEMPORARY CRASH CUSHION, SAND FILLED (UNIDIRECTIONAL)

NO SCALE

RSP T1A DATED JUNE 6, 2008 SUPERSEDES STANDARD PLAN T1A
DATED MAY 1, 2006 - PAGE 211 OF THE STANDARD PLANS BOOK DATED MAY 2006.

**REVISED STANDARD PLAN RSP T1A**

**2006 REVISED STANDARD PLAN RSP T1A**

| DIST | COUNTY | ROUTE | POST MILES TOTAL PROJECT | SHEET NO. | TOTAL SHEETS |
|---|---|---|---|---|---|
| 01 | Hum | 101 | T0.2/R126.0 | 58 | 72 |

Randell D. Hiatt
REGISTERED CIVIL ENGINEER

June 6, 2008
PLANS APPROVAL DATE

REGISTERED PROFESSIONAL ENGINEER
Randell D. Hiatt
No. C50200
Exp. 6-30-09
CIVIL
STATE OF CALIFORNIA

*The State of California or its officers or agents shall not be responsible for the accuracy or completeness of electronic copies of this plan sheet.*

*To accompany plans dated* 9-21-09

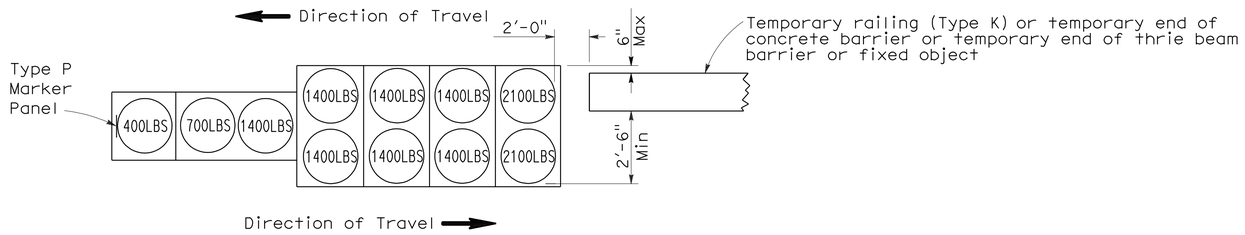


## ARRAY 'TB11'

Approach speed less than 45 mph

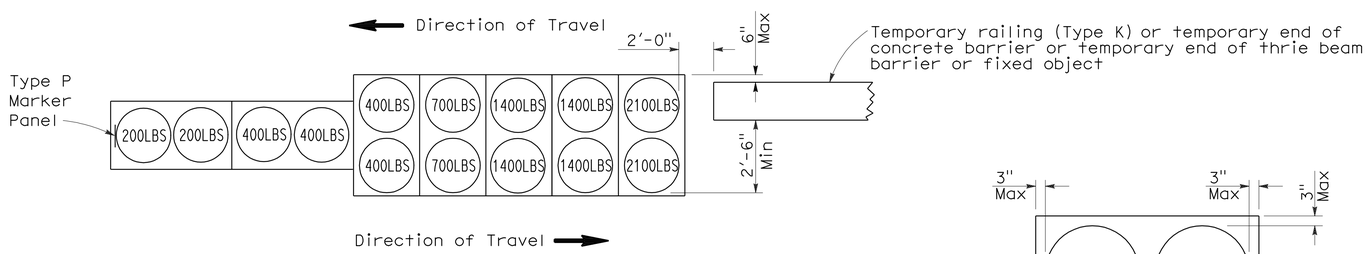


## ARRAY 'TB14'

Approach speed 45 mph or more

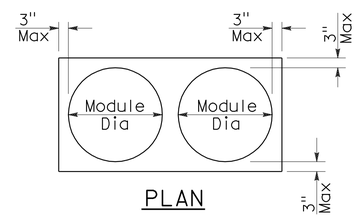


## PLAN

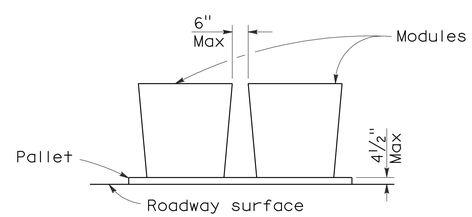


## ELEVATION

## CRASH CUSHION PALLET DETAIL

See Note 7

## NOTES:

1. (XXX) Indicates sand filled module location and weight of sand in pounds for each module. Module spacing is based on the greater diameter of the module.
2. All sand weights are nominal.
3. Temporary crash cushion arrays shall not encroach on the traveled way.
4. Place the Type P marker panel so that the bottom of the panel rests upon the pallet.
5. Refer to Standard Plan A73B for marker details.
6. Approach speeds indicated conform to NCHRP 350 Report criteria.
7. Use of pallets is optional.

STATE OF CALIFORNIA
DEPARTMENT OF TRANSPORTATION

# TEMPORARY CRASH CUSHION, SAND FILLED (BIDIRECTIONAL)

NO SCALE

RSP T1B DATED JUNE 6, 2008 SUPERSEDES STANDARD PLAN T1B
DATED MAY 1, 2006 - PAGE 212 OF THE STANDARD PLANS BOOK DATED MAY 2006.

**REVISED STANDARD PLAN RSP T1B**

**2006 REVISED STANDARD PLAN RSP T1B**

5-15-08

| DIST | COUNTY | ROUTE | POST MILES TOTAL PROJECT | SHEET NO. | TOTAL SHEETS |
|---|---|---|---|---|---|
| 01 | Hum | 101 | T0.2/R126.0 | 59 | 72 |

Randell D. Hiatt
REGISTERED CIVIL ENGINEER

June 6, 2008
PLANS APPROVAL DATE

REGISTERED PROFESSIONAL ENGINEER
Randell D. Hiatt
No. C50200
Exp. 6-30-09
CIVIL
STATE OF CALIFORNIA

*The State of California or its officers or agents shall not be responsible for the accuracy or completeness of electronic copies of this plan sheet.*

*To accompany plans dated* 9-21-09

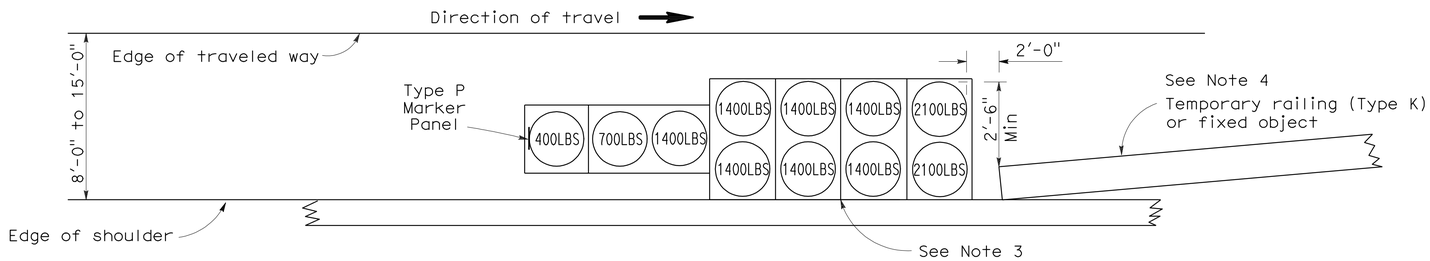


## ARRAY 'TS11'

Approach speed less than 45 mph
See Note 9

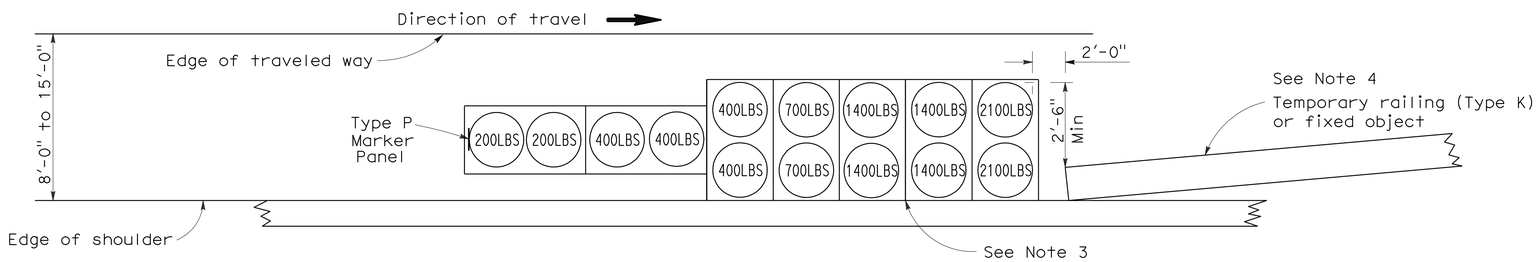


## ARRAY 'TS14'

Approach speed 45 mph or more
See Note 9

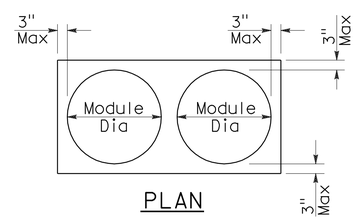


PLAN

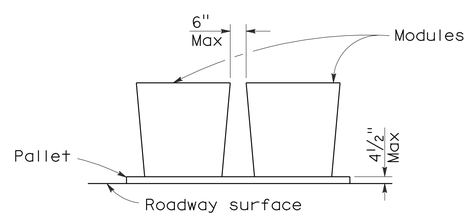


ELEVATION

## CRASH CUSHION PALLET DETAIL

See Note 11

## NOTES:

1. (XXX) Indicates sand filled module location and weight of sand in pounds for each module. Module spacing is based on the greater diameter of the module.
2. All sand weights are nominal.
3. The temporary crash cushion arrays shown on this plan shall be used only in locations where there will be traffic on one side of the temporary crash cushion array.
4. If the fixed object or approach end of the temporary railing is less than 15'-0" from the edge of traveled way, a temporary crash cushion is required in a construction or work zone.
5. Temporary crash cushion arrays shall not encroach on the traveled way.
6. Arrays for median shoulders shall conform to details shown on this plan for outside shoulders.
7. Place the Type P marker panel so that the bottom of the panel rests upon the pallet and faces traffic.
8. Refer to Standard Plan A73B for marker details.
9. For shoulder widths less than 8'-0", appropriate approved crash cushion protection, other than sand filled modules, shall be provided at fixed objects and at approach ends of temporary railing. The specific type of crash cushion shall be as shown on the project plans or as specified in the Special Provisions, or if not shown on the project plans or specified in the Special Provisions, shall be as approved by the Engineer.
10. Approach speeds indicated conform to NCHRP 350 Report criteria.
11. Use of pallets is optional.

STATE OF CALIFORNIA
DEPARTMENT OF TRANSPORTATION

# TEMPORARY CRASH CUSHION, SAND FILLED (SHOULDER INSTALLATIONS)

NO SCALE

RSP T2 DATED JUNE 6, 2008 SUPERSEDES STANDARD PLAN T2
DATED MAY 1, 2006 - PAGE 213 OF THE STANDARD PLANS BOOK DATED MAY 2006.

**REVISED STANDARD PLAN RSP T2**

**2006 REVISED STANDARD PLAN RSP T2**

5-15-08

| DIST | COUNTY | ROUTE | POST MILES TOTAL PROJECT | SHEET NO. | TOTAL SHEETS |
|---|---|---|---|---|---|
| 01 | Hum | 101 | T0.2/R126.0 | 60 | 72 |

Robert B Schott
LICENSED LANDSCAPE ARCHITECT

April 3, 2009
PLANS APPROVAL DATE

LICENSED LANDSCAPE ARCHITECT — Robert B. Schott 3625 — Robert B Schott — Signature — 11-30-10 Renewal Date — 2-25-09 Date — STATE OF CALIFORNIA

*The State of California or its officers or agents shall not be responsible for the accuracy or completeness of electronic copies of this plan sheet.*

*To accompany plans dated* 9-21-09

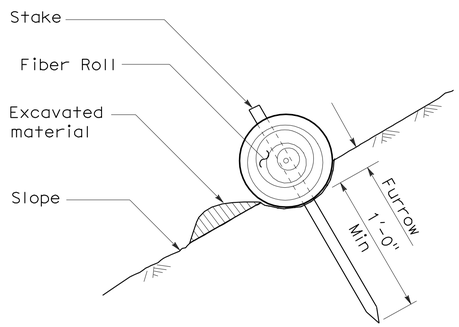


SECTION

TEMPORARY FIBER ROLL (TYPE 1)

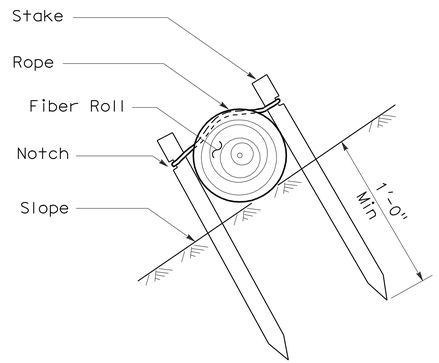


SECTION

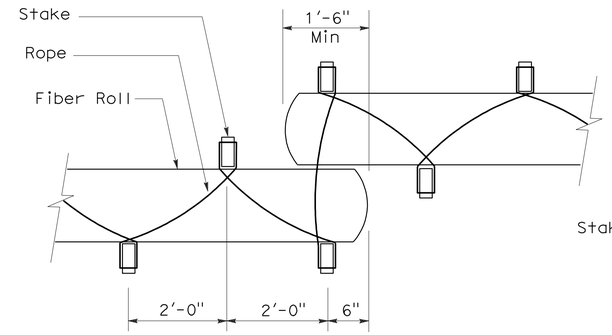


PLAN

TEMPORARY FIBER ROLL (TYPE 2)

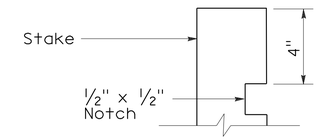


ELEVATION

STAKE NOTCH DETAIL

NOTES:

1. Temporary fiber roll spacing varies depending upon slope inclination.
2. Installations shown in the perspectives are for slope inclination of 10:1 and steeper.

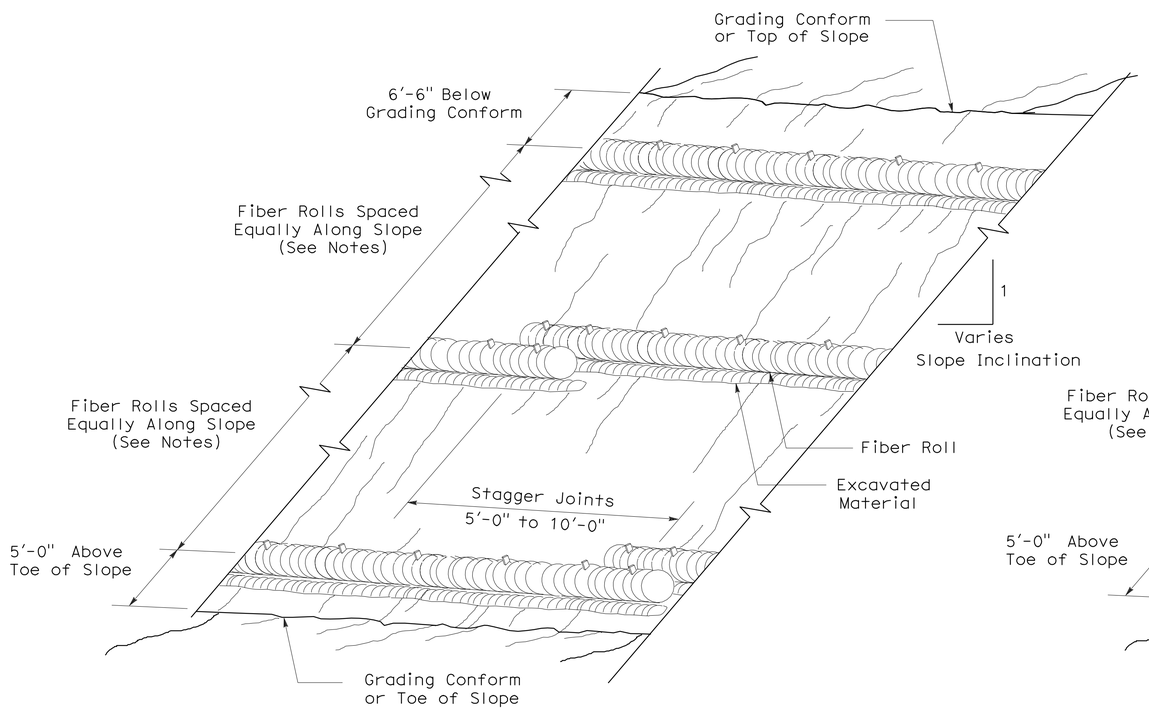


PERSPECTIVE

TEMPORARY FIBER ROLL (TYPE 1)

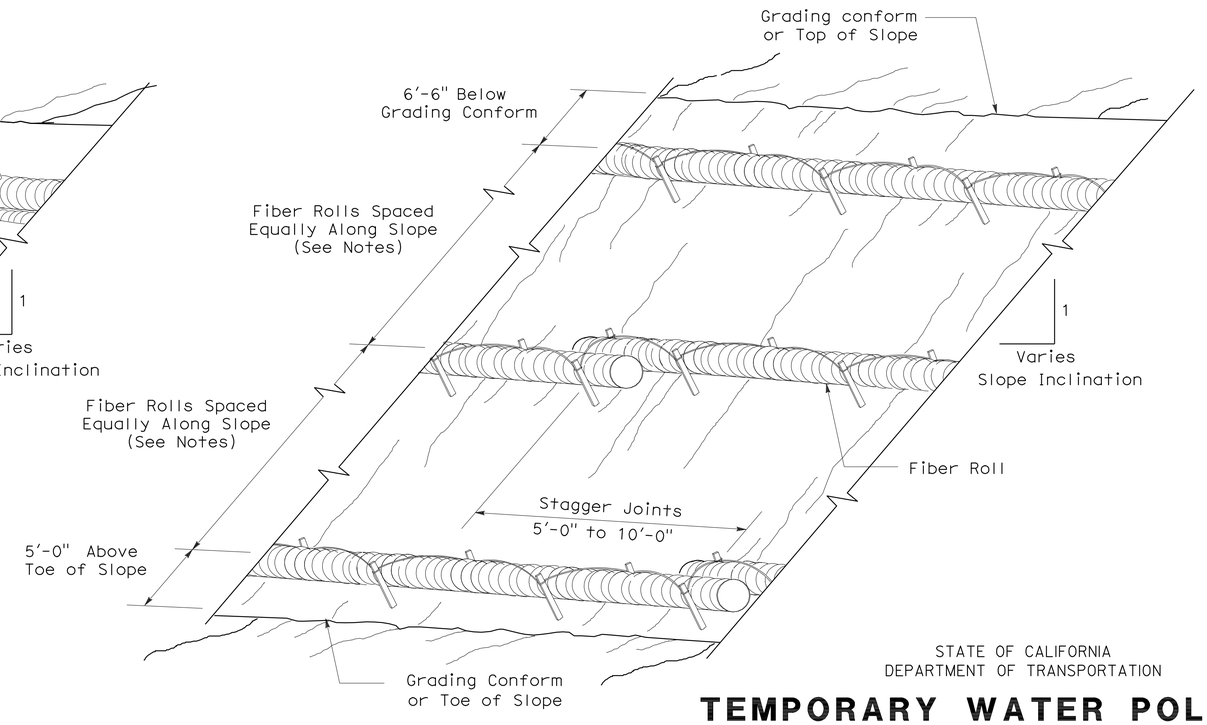


PERSPECTIVE

TEMPORARY FIBER ROLL (TYPE 2)

STATE OF CALIFORNIA
DEPARTMENT OF TRANSPORTATION

# TEMPORARY WATER POLLUTION CONTROL DETAILS (TEMPORARY FIBER ROLL)

NO SCALE

RSP T56 DATED APRIL 3, 2009 SUPERSEDES STANDARD PLAN T56
DATED MAY 1, 2006 - PAGE 232 OF THE STANDARD PLANS BOOK DATED MAY 2006.

**REVISED STANDARD PLAN RSP T56**

**2006 REVISED STANDARD PLAN RSP T56**

| DIST | COUNTY | ROUTE | POST MILES TOTAL PROJECT | SHEET NO. | TOTAL SHEETS |
|---|---|---|---|---|---|
| 01 | Hum | 101 | T0.2/R126.0 | 61 | 72 |

Robert B Schott
LICENSED LANDSCAPE ARCHITECT

August 15, 2008
PLANS APPROVAL DATE

LICENSED LANDSCAPE ARCHITECT Robert B. Schott 3625 Signature 11-04-08 Renewal Date 08-11-08 Date STATE OF CALIFORNIA

*The State of California or its officers or agents shall not be responsible for the accuracy or completeness of electronic copies of this plan sheet.*

*To accompany plans dated* 9-21-09

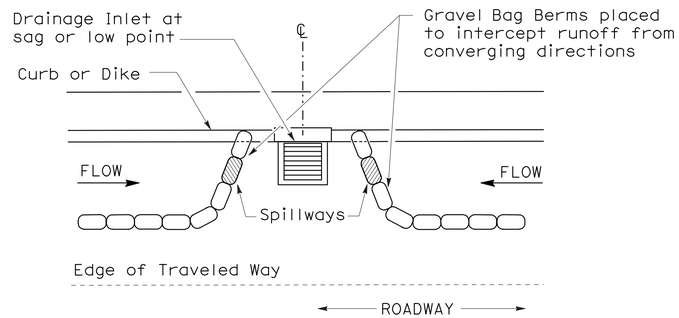


PLAN

## CONFIGURATION FOR SAG POINT INLET (GRAVEL BAG BERM)

## GRAVEL BAG BERM (TYPE 3A) SPACING TABLE

| SLOPE OF ROADWAY (PERCENT) | 1 to 3.9 | 4 to 5.9 | 6 to 7.9 | 8 to 10 | 10+ |
|---|---|---|---|---|---|
| INTERVAL BETWEEN BERM | 100′ | 75′ | 50′ | 25′ | 12′ |

For slope of less than 1%, install barriers only if erosion/sediment is prevalent

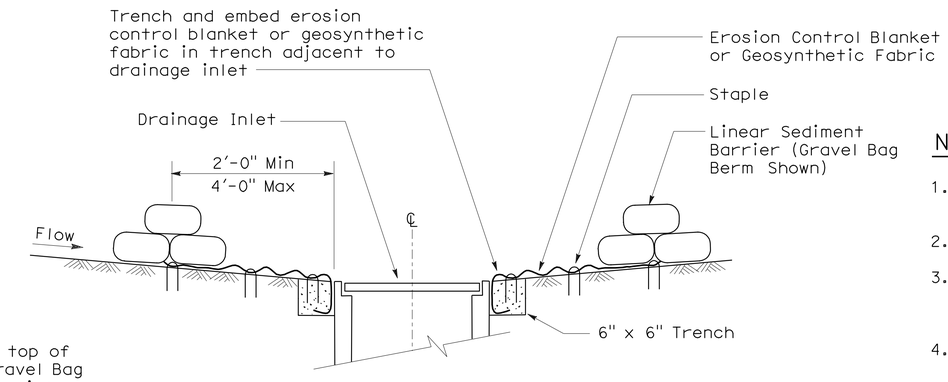


SECTION A-A

## NOTES:

1. Place safety cones adjacent to drainage inlet protection.
2. Dimensions may vary to fit field conditions.
3. Install a minimum of 3 gravel bag berms upstream of each drainage inlet to be protected.
4. Position erosion control blanket or geosynthetic fabric at edge of concrete apron and secure in trench.
5. Erosion control blanket or geosynthetic fabric is not required if the area adjacent to the drainage inlet is vegetated or paved.

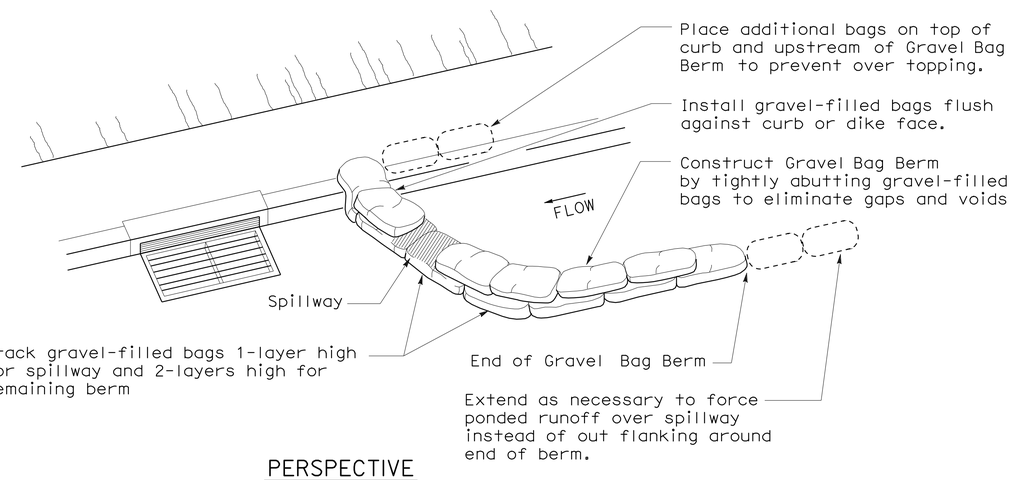


PERSPECTIVE

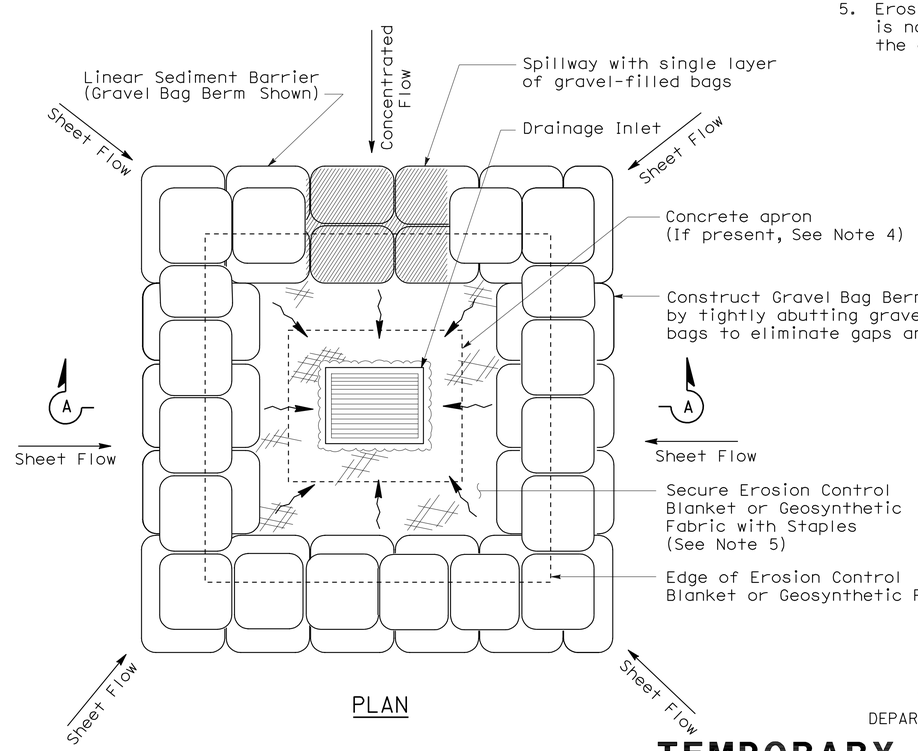


PLAN

## TEMPORARY DRAINAGE INLET PROTECTION (TYPE 3B)

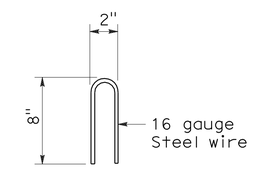


STAPLE DETAIL

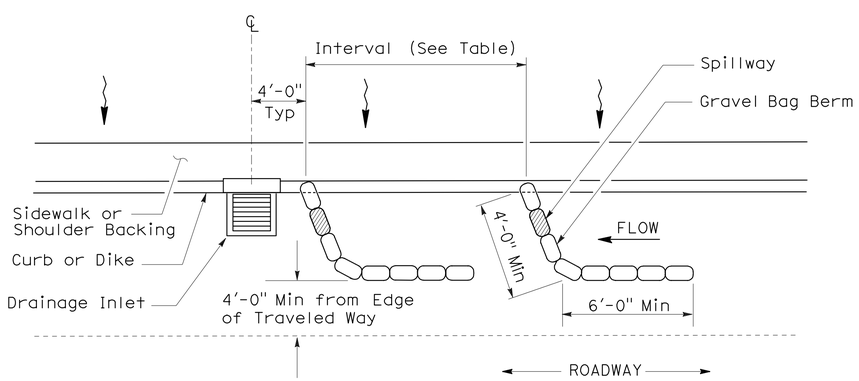


PLAN

## TEMPORARY DRAINAGE INLET PROTECTION (TYPE 3A) (GRAVEL BAG BERM)

STATE OF CALIFORNIA
DEPARTMENT OF TRANSPORTATION

# TEMPORARY WATER POLLUTION CONTROL DETAILS (TEMPORARY DRAINAGE INLET PROTECTION)

NO SCALE

NSP T62 DATED AUGUST 15, 2008 SUPPLEMENTS THE STANDARD PLANS BOOK DATED MAY 2006.

**NEW STANDARD PLAN NSP T62**

**2006 NEW STANDARD PLAN NSP T62**

7-11-08

| DIST | COUNTY | ROUTE | POST MILES TOTAL PROJECT | SHEET NO. | TOTAL SHEETS |
|---|---|---|---|---|---|
| 01 | Hum | 101 | T0.2/R126.0 | 62 | 72 |

LICENSED LANDSCAPE ARCHITECT

April 3, 2009
PLANS APPROVAL DATE

LICENSED LANDSCAPE ARCHITECT Robert B. Schott 3625 Signature 11-30-10 Renewal Date 2-25-09 Date STATE OF CALIFORNIA

*The State of California or its officers or agents shall not be responsible for the accuracy or completeness of electronic copies of this plan sheet.*

*To accompany plans dated* 9-21-09

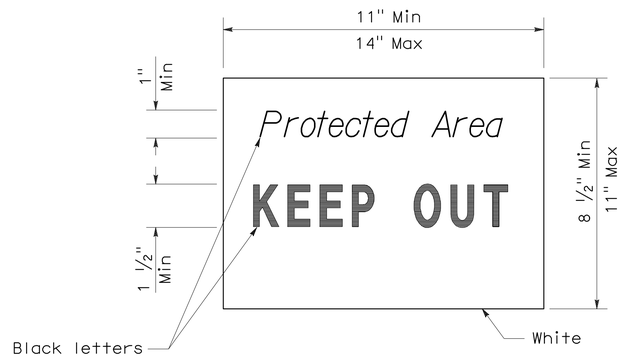


SIGN DETAIL

NOTE:

1. Temporary silt fence and temporary straw bale barrier shown for reference purposes only.

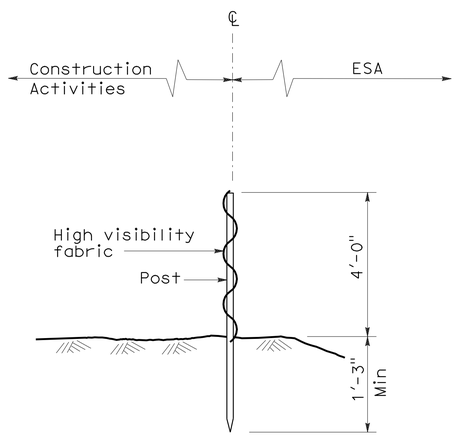


SECTION
TEMPORARY FENCE (TYPE ESA)

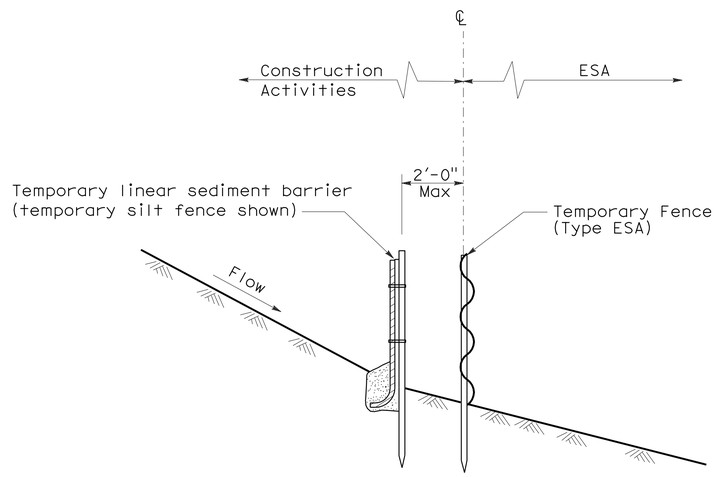


SECTION
PLACEMENT DETAIL
FOR TEMPORARY LINEAR SEDIMENT BARRIER
USED WITH TEMPORARY
FENCE (TYPE ESA)
(See Note 1 )

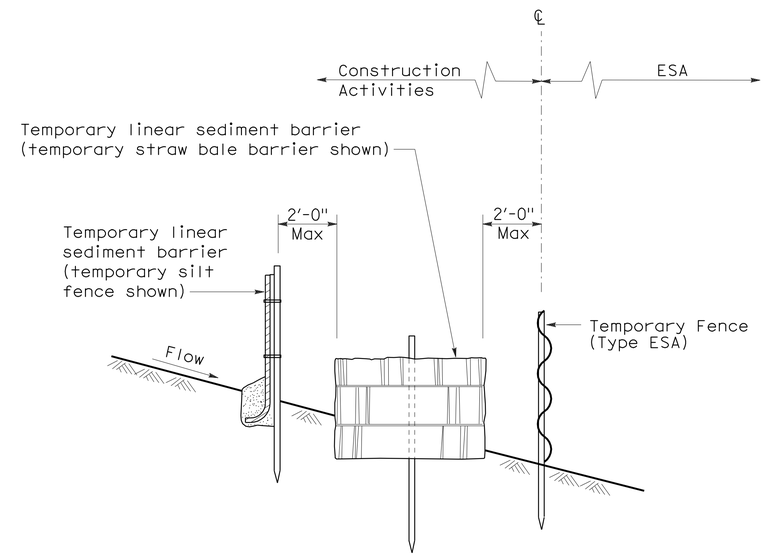


SECTION
PLACEMENT DETAIL
FOR TEMPORARY SILT FENCE
AND TEMPORARY STRAW BALE BARRIER
USED WITH TEMPORARY FENCE (TYPE ESA)
(See Note 1 )

STATE OF CALIFORNIA
DEPARTMENT OF TRANSPORTATION

# TEMPORARY WATER POLLUTION CONTROL DETAILS [TEMPORARY FENCE (TYPE ESA)]

NO SCALE

NSP T65 DATED APRIL 3, 2009 SUPPLEMENTS
THE STANDARD PLANS BOOK DATED MAY 2006.

**NEW STANDARD PLAN NSP T65**

**2006 NEW STANDARD PLAN NSP T65**

| DIST | COUNTY | ROUTE | POST MILES TOTAL PROJECT | SHEET No | TOTAL SHEETS |
|---|---|---|---|---|---|
| 01 | Hum | 101 | T0.2/R126.0 | 63 | 72 |

REGISTERED CIVIL ENGINEER 3/16/09 DATE

9-21-09
PLANS APPROVAL DATE

REGISTERED PROFESSIONAL ENGINEER JOEL MAGANA No. C61500 Exp. 6/30/11 CIVIL STATE OF CALIFORNIA

*The State of California or its officers or agents shall not be responsible for the accuracy or completeness of electronic copies of this plan sheet.*

## INDEX TO PLANS


| Sheet No. | Title |
|---|---|
| 1 | Index to Plans |
| 2 | Type 1 Barrier (Case 1 and 2) |
| 3 | Type 2 Barrier (Case 1) |
| 4 | Type 9 Barrier (Case 1 and 2) |
| 5 | Type 25 Barrier (Case 1) |
| 6 | Type 25 Barrier (Case 2) |
| 7 | Type 25 Barrier (Case 3) |
| 8 | Type 27 Barrier (Case 1) |
| 9 | Type 27 Barrier (Case 2) |
| 10 | Type 27 Barrier (Case 3) |
| 11 | Big Lagoon Bridge |


## STANDARD PLANS DATED MAY 2006

| | |
|---|---|
| A10A | ACRONYMS AND ABBREVIATIONS (A-L) |
| A10B | ACRONYMS AND ABBREVIATIONS (M-Z) |
| A62C | LIMITS OF PAYMENT FOR EXCAVATION AND BACKFILL - BRIDGE |
| RSP A77J2 | METAL BEAM GUARD RAILING CONNECTIONS TO BRIDGE RAILING DETAILS |
| A77J3 | METAL BEAM GUARD RAILING CONNECTIONS TO BRIDGE RAILING DETAILS |

Standard Plan sheet number

Detail number

## LEGEND

Indicates existing structure

Indicates new construction

NOTE:

See "ROADWAY PLANS" for work locations.

| | BY | CHECKED |
|---|---|---|
| DESIGN | N KANEPATHIPILLAI | J MAGANA |
| DETAILS | P C WELLS | N KANEPATHIPILLAI |
| QUANTITIES | J. MAGANA/P C WELLS | N K P/D SANDHU |

STATE OF CALIFORNIA
DEPARTMENT OF TRANSPORTATION

DIVISION OF ENGINEERING SERVICES
STRUCTURE DESIGN
SPECIAL DESIGN BRANCH

BRIDGE NO. Varies
POST MILE Varies

INDEX TO PLANS
TRANSITION ANCHOR BLOCK DETAILS

STRUCTURES DESIGN SPECIAL DESIGN SHEET (ENGLISH) (REV. 10-25-05)

ORIGINAL SCALE IN INCHES FOR REDUCED PLANS 0 1 2 3

CU 01
EA 464001

DISREGARD PRINTS BEARING EARLIER REVISION DATES

REVISION DATES

SHEET 1 OF 11

FILE => aitp.dgn

USERNAME => trmikesl DATE PLOTTED => 23-SEP-2009 TIME PLOTTED => 06:59

| DIST | COUNTY | ROUTE | POST MILES TOTAL PROJECT | SHEET No | TOTAL SHEETS |
|---|---|---|---|---|---|
| 01 | Hum | 101 | T0.2/R126.0 | 64 | 72 |

REGISTERED CIVIL ENGINEER 3/16/09 DATE

9-21-09
PLANS APPROVAL DATE

REGISTERED PROFESSIONAL ENGINEER JOEL MAGANA No. C61500 Exp. 6/30/11 CIVIL STATE OF CALIFORNIA

*The State of California or its officers or agents shall not be responsible for the accuracy or completeness of electronic copies of this plan sheet.*

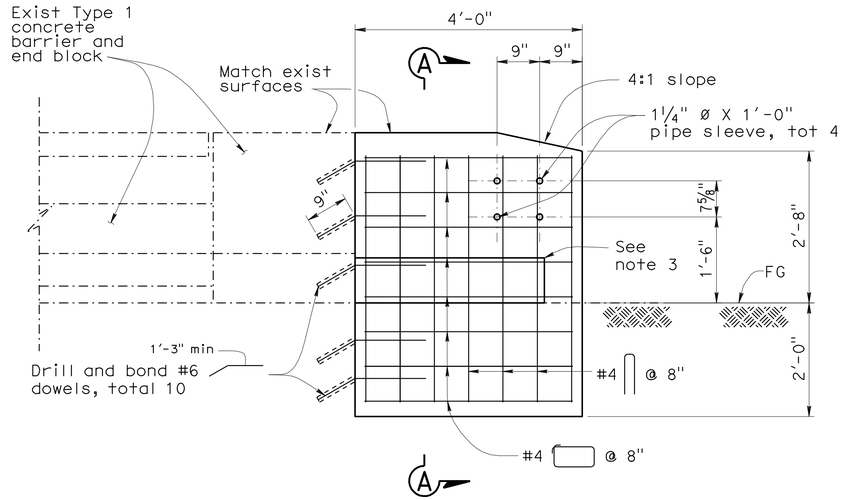


## ELEVATION

¾" = 1'

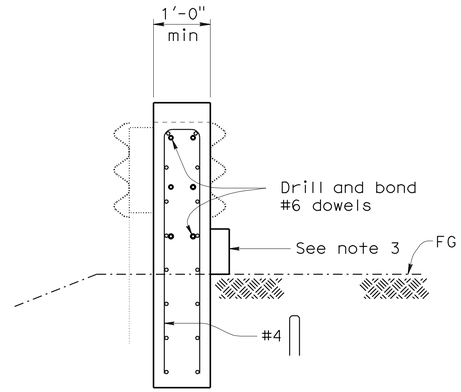


## SECTION A-A

¾" = 1'

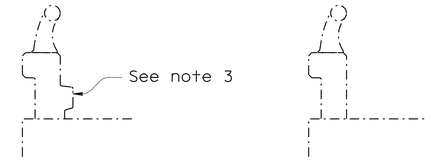


CASE 1 CASE 2

## TYPICAL SECTION EXISTING TYPE 1 BARRIER RAIL

½" = 1'

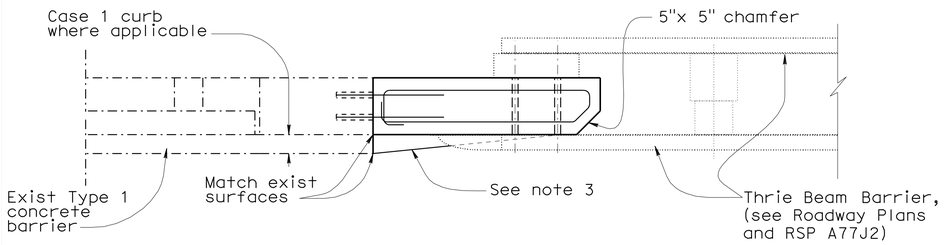


## PLAN

¾" = 1'

NOTES:

1. For limits of excavation and backfill, see 2006 Standard Plans A62C, SECTION E-E.
2. See Roadway Plans for work locations.
3. If existing barrier rail is similar to Case 1, transition curb 10:1 until flush with vert face of transition block. If exist barrier rail is similar to Case 2, construct only transition block, (w/out curb transition).
4. Epoxy fill drilled holes for bolts used to fasten MBGR to existing end block, unless holes were cast using pipe sleeves.

## LOCATION TABLE OF TYPE 1 BARRIER TRANSITION BLOCK APPLICATIONS

| Bridge No. | Bridge Name | Post Mile | Direction | No. of Connections (WB) Leading End | No. of Connections (WB) Trailing End | Case |
|---|---|---|---|---|---|---|
| 04-006S | Dean Creek Off-ramp(Rt) | 14.31 | NB | 1 | | 2 |
| 04-0192 | Dimmick Road UC | 19.7 | NB<br>SB | 1<br>1 | | 1 |
| 04-0174 | French Road UC | 22.44 | NB<br>SB | 1<br>1 | | 1 |
| 04-0175 | Bear Buttes Rd UC | 23.01 | NB<br>SB | 1<br>1 | | 1 |
| 04-0123 | South Fork Eel River | 27.71 | NB<br>SB | 1<br>1 | | 1 |
| 04-0199 | Bear Creek | 42.99 | NB<br>SB | 1<br>1 | | 2 |
| 04-0200 | Barkdull Rd UC | 43.32 | NB<br>SB | 1<br>1 | | 2 |
| 04-0206 | Greenlaw Creek | 45.57 | NB<br>SB | 1<br>1 | | 2 |
| 04-0207 | Jordan Road Seperator | 45.90 | NB<br>SB | 1<br>1 | | 2 |
| 04-0208L<br>04-0208R | Jordan Creek | 46.18<br>46.19 | NB<br>SB | 2<br>2 | | 2 |
| 04-0205 | Stafford Road UC | 47.95 | NB<br>SB | 1<br>1 | | 2 |
| 04-0014 | Eel River Bridge & OH | 48.69 | NB<br>SB | 1<br>1 | | 2 |
| 04-0108 | Rohner Creek | 60.67 | NB<br>SB | 1<br>1 | | 1 |
| 04-0122 | Orchard Avenue UC | 72.03 | NB<br>SB | 1<br>1 | | 1 |
| 04-0067L<br>04-0067R | King Salmon Ave UC | 72.80<br>72.88 | NB<br>SB | 2<br>2 | | 1 |

## LEGEND

-·-·-·-·- Indicates existing structure

——— Indicates new construction

**THE CONTRACTOR SHALL VERIFY ALL CONTROLLING FIELD DIMENSIONS BEFORE ORDERING OR FABRICATING ANY MATERIAL.**

| | BY | CHECKED |
|---|---|---|
| DESIGN | N KANEPATHIPILLAI | J MAGANA |
| DETAILS | P C W/B EDWARDS | N KANEPATHIPILLAI |
| QUANTITIES | J. MAGANA/P C WELLS | N K P/D SANDHU |

STATE OF CALIFORNIA DEPARTMENT OF TRANSPORTATION

DIVISION OF ENGINEERING SERVICES STRUCTURE DESIGN
SPECIAL DESIGN BRANCH

BRIDGE NO. Varies
POST MILE Varies

# TYPE 1 BARRIER (CASE 1 AND CASE 2) TRANSITION ANCHOR BLOCK DETAILS

STRUCTURES DESIGN SPECIAL DESIGN SHEET (ENGLISH) (REV. 10-25-05)

ORIGINAL SCALE IN INCHES FOR REDUCED PLANS 0 1 2 3

CU 01
EA 464001

DISREGARD PRINTS BEARING EARLIER REVISION DATES

REVISION DATES: 2-25-09 2-25-09 3/3/09 3/18/09 3/16/09

SHEET 2 OF 11

FILE => kbar01.dgn

USERNAME => trmikesl DATE PLOTTED => 23-SEP-2009 TIME PLOTTED => 06:59

| DIST | COUNTY | ROUTE | POST MILES TOTAL PROJECT | SHEET No | TOTAL SHEETS |
|---|---|---|---|---|---|
| 01 | Hum | 101 | T0.2/R126.0 | 65 | 72 |

REGISTERED CIVIL ENGINEER 3/16/09 DATE

9-21-09
PLANS APPROVAL DATE

REGISTERED PROFESSIONAL ENGINEER JOEL MAGANA No. C61500 Exp. 6/30/11 CIVIL STATE OF CALIFORNIA

*The State of California or its officers or agents shall not be responsible for the accuracy or completeness of electronic copies of this plan sheet.*

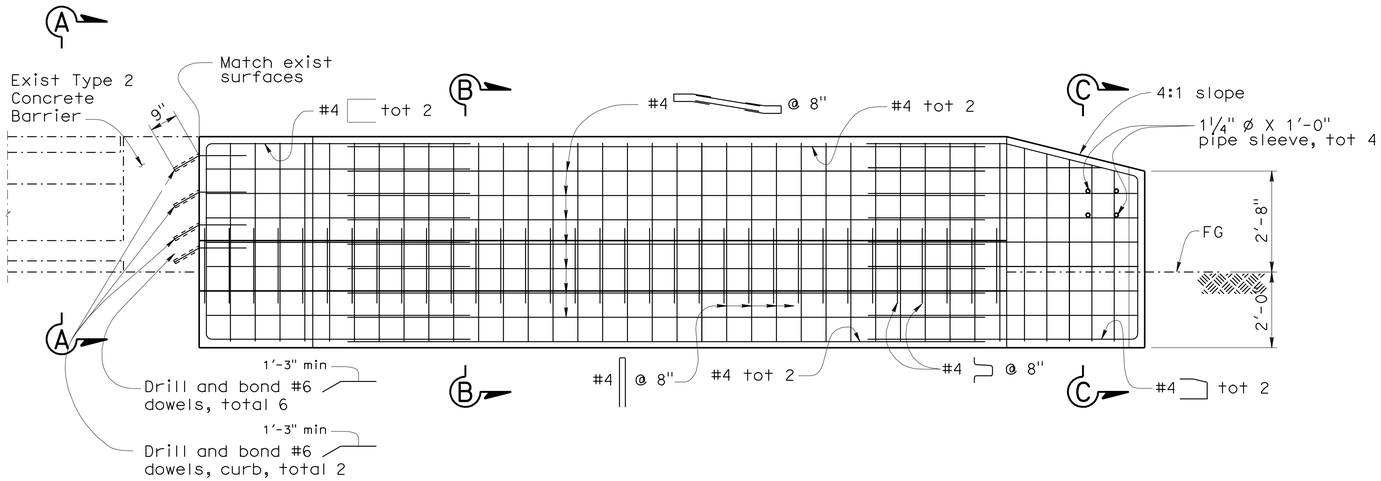


## ELEVATION
no scale

## LEGEND

Indicates existing structure

Indicates new construction

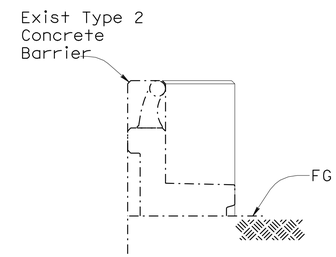


## SECTION A-A
no scale

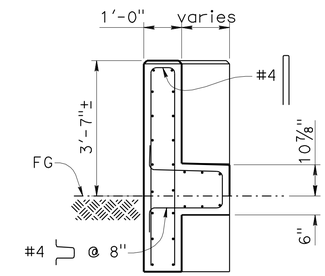


## SECTION B-B
no scale

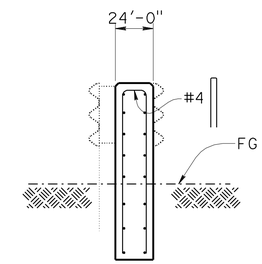


## SECTION C-C
no scale

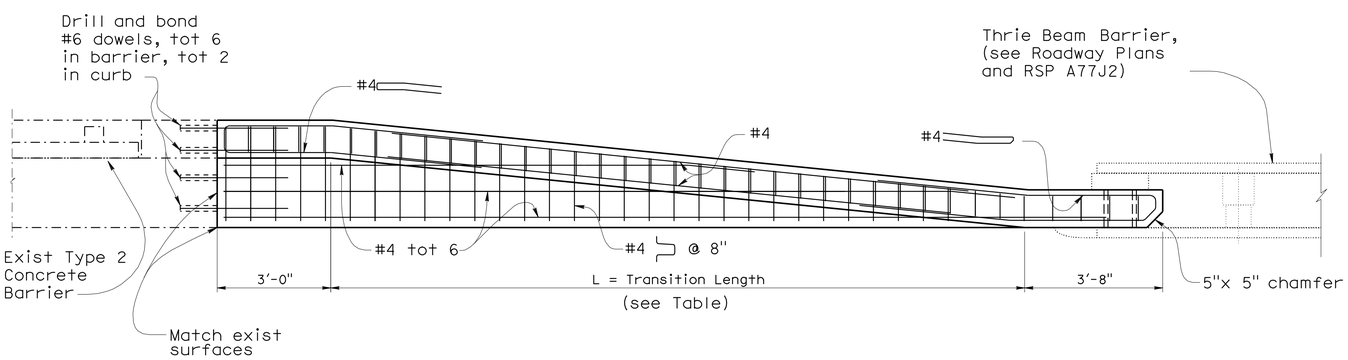


## PLAN
no scale

### LOCATION TABLE OF TYPE 2 BARRIER TRANSITION BLOCK APPLICATIONS

| Bridge No. | Bridge Name | Post Mile | Direction | No. of Connections (WB) Leading End | No. of Connections (WB) Trailing End | L (ft) |
|---|---|---|---|---|---|---|
| 04-0006 | Dean Creek | 14.31 | NB<br>SB | 1<br>1 | 1<br>1 | 40 |
| 04-0006S | Dean Creek Off-Ramp (LT) | 14.31 | NB | 1 | | 20 |
| 04-0065 | So. Fork Eel River Bridge B&S | 17.89 | NB<br>SB | 1<br>1 | | 20 |
| 04-0176 | Salmon Creek | 23.89 | NB<br>SB | 1<br>1 | 1<br>1 | 20 |
| 04-0072 | Eagle Point Sidehill Viaduct | 27.07 | NB<br>SB | 1<br>1 | 1<br>1 | 20 |
| 04-0124 | Myers flat Seperation (So.Fo. Eel River) | 27.92 | NB<br>SB | 1<br>1 | | 40 |
| 04-0145 | Fortuna OH | 61.53 | NB<br>SB | 1<br>1 | | 40 |

NOTES:

1. For limits of excavation and backfill see 2006 Standard Plans A62C, Section E-E.
2. See Roadway Plans for work locations.
3. Epoxy fill drilled holes for bolts used to fasten MBGR to existing end block, unless holes were cast using pipe sleeves.

**THE CONTRACTOR SHALL VERIFY ALL CONTROLLING FIELD DIMENSIONS BEFORE ORDERING OR FABRICATING ANY MATERIAL.**

| | BY | CHECKED |
|---|---|---|
| DESIGN | N KANEPATHIPILLAI | J MAGANA |
| DETAILS | P C W/B EDWARDS | N KANEPATHIPILLAI |
| QUANTITIES | J. MAGANA/P C WELLS | N K P/D SANDHU |

STATE OF CALIFORNIA
DEPARTMENT OF TRANSPORTATION

DIVISION OF ENGINEERING SERVICES
STRUCTURE DESIGN
SPECIAL DESIGN BRANCH

BRIDGE NO. Varies
POST MILE Varies

# TYPE 2 BARRIER (CASE 1)
# TRANSITION ANCHOR BLOCK DETAILS

STRUCTURES DESIGN SPECIAL DESIGN SHEET (ENGLISH) (REV. 10-25-05)

ORIGINAL SCALE IN INCHES FOR REDUCED PLANS 0 1 2 3

CU 01
EA 464001

DISREGARD PRINTS BEARING EARLIER REVISION DATES 3/18/09 3/16/09

REVISION DATES

SHEET 3 OF 11

FILE => kbar02.dgn

USERNAME => trmikes1 DATE PLOTTED => 23-SEP-2009 TIME PLOTTED => 07:00

| DIST | COUNTY | ROUTE | POST MILES TOTAL PROJECT | SHEET No | TOTAL SHEETS |
|---|---|---|---|---|---|
| 01 | Hum | 101 | T0.2/R126.0 | 66 | 72 |

REGISTERED CIVIL ENGINEER 3/16/09 DATE

9-21-09
PLANS APPROVAL DATE

REGISTERED PROFESSIONAL ENGINEER JOEL MAGANA No. C61500 Exp. 6/30/11 CIVIL STATE OF CALIFORNIA

*The State of California or its officers or agents shall not be responsible for the accuracy or completeness of electronic copies of this plan sheet.*

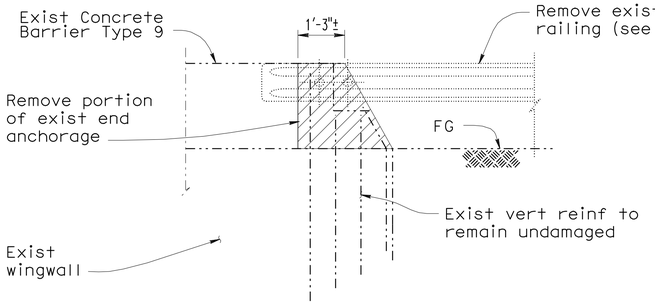


ELEVATION

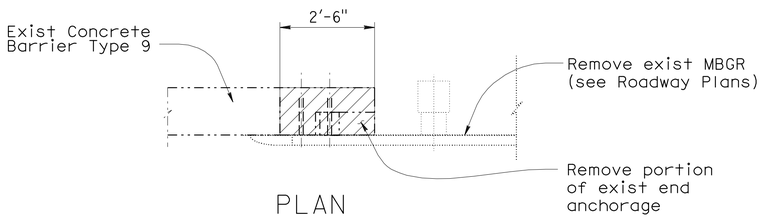


PLAN

## CONCRETE REMOVAL
no scale

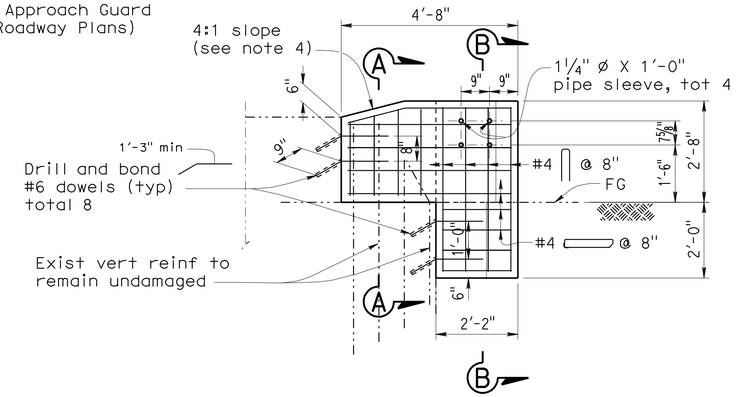


## ELEVATION
no scale

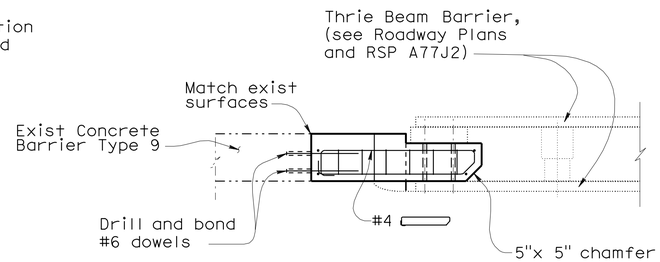


## PLAN
no scale

## CASE 1 (TYPE 9)

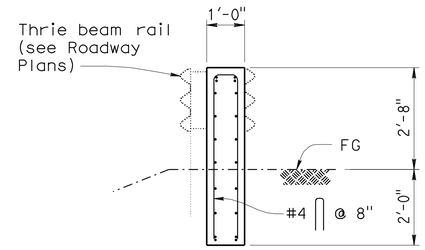


## SECTION C-C
no scale

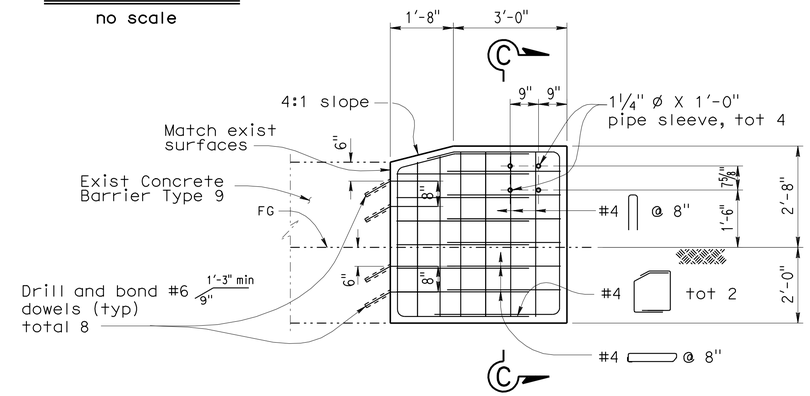


## ELEVATION
no scale

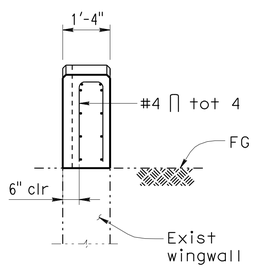


## SECTION A-A
no scale

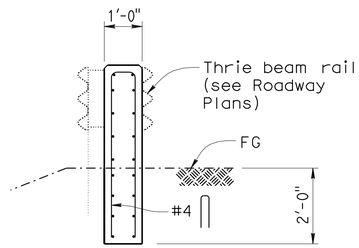


## SECTION B-B
no scale

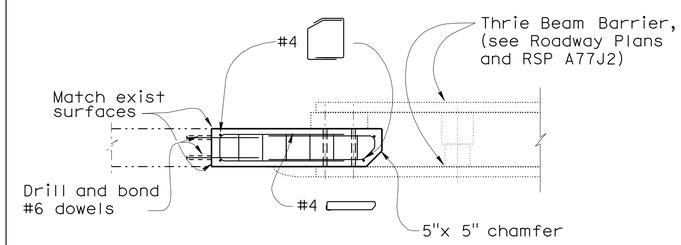


## PLAN
no scale

## CASE 2 (TYPE 9)

LOCATION TABLE OF TYPE 9 BARRIER TRANSITION BLOCK APPLICATIONS

| Bridge No. | Bridge Name | Post Mile | Direction | No. of Connections (WB) Leading End | No. of Connections (WB) Trailing End |
|---|---|---|---|---|---|
| 04-0216 | Old US 101 UC | 7.77 | NB<br>SB | 1 Case 2<br>1 Case 2 | |
| 04-0155 | South Fork Eel River Bridge | 7.87 | NB<br>SB | 1 Case 1<br>1 Case 1 | |
| 04-0212 | South Fork Eel River Bridge | 8.30 | NB<br>SB | 1 Case 1<br>1 Case 1 | |
| 04-0211 | Benbow UC | 8.6 | NB<br>SB | 1 Case 1<br>1 Case 1 | |
| 04-0039 | East. Branch of South Fork. Eel River Bridge | 8.8 | NB<br>SB | 1 Case 1 | 1 Case 1 |

NOTES:

1. For limits of excavation and backfill see Standard Plans May 2006 A62C, Section E-E.
2. See Roadway Plans for work locations.
3. Epoxy fill drilled holes for bolts used to fasten MBGR to existing end block, unless holes were cast using pipe sleeves.
4. Existing barrier heights vary. Where exist barrier height is more than 2'-8", transition barrier height to 2'-8" @ 4:1 slope.

**THE CONTRACTOR SHALL VERIFY ALL CONTROLLING FIELD DIMENSIONS BEFORE ORDERING OR FABRICATING ANY MATERIAL.**

| | BY | CHECKED |
|---|---|---|
| DESIGN | N KANEPATHIPILLAI | J MAGANA |
| DETAILS | P C W/B EDWARDS | N KANEPATHIPILLAI |
| QUANTITIES | J. MAGANA/P C WELLS | N K P/D SANDHU |

STATE OF CALIFORNIA DEPARTMENT OF TRANSPORTATION

DIVISION OF ENGINEERING SERVICES STRUCTURE DESIGN
SPECIAL DESIGN BRANCH

BRIDGE NO. Varies
POST MILE Varies

# TYPE 9 BARRIER (CASE 1 AND CASE 2) TRANSITION ANCHOR BLOCK DETAILS

STRUCTURES DESIGN SPECIAL DESIGN SHEET (ENGLISH) (REV. 10-25-05)

ORIGINAL SCALE IN INCHES FOR REDUCED PLANS 0 1 2 3

CU 01
EA 464001

DISREGARD PRINTS BEARING EARLIER REVISION DATES 3/16/09 5/16/09

REVISION DATES

SHEET 4 OF 11

FILE => kbar03.dgn

USERNAME => trmikesi DATE PLOTTED => 23-SEP-2009 TIME PLOTTED => 07:00

| DIST | COUNTY | ROUTE | POST MILES TOTAL PROJECT | SHEET No | TOTAL SHEETS |
|---|---|---|---|---|---|
| 01 | Hum | 101 | T0.2/R126.0 | 67 | 72 |

REGISTERED CIVIL ENGINEER 3/16/09 DATE

9-21-09
PLANS APPROVAL DATE

REGISTERED PROFESSIONAL ENGINEER JOEL MAGANA No. C61500 Exp. 6/30/11 CIVIL STATE OF CALIFORNIA

*The State of California or its officers or agents shall not be responsible for the accuracy or completeness of electronic copies of this plan sheet.*

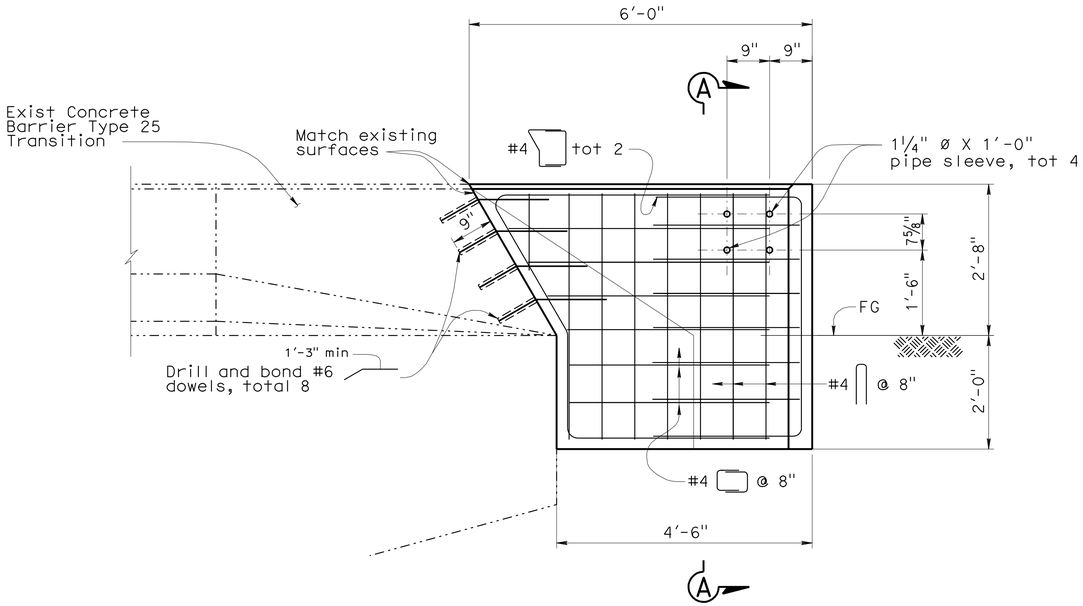


## ELEVATION
no scale

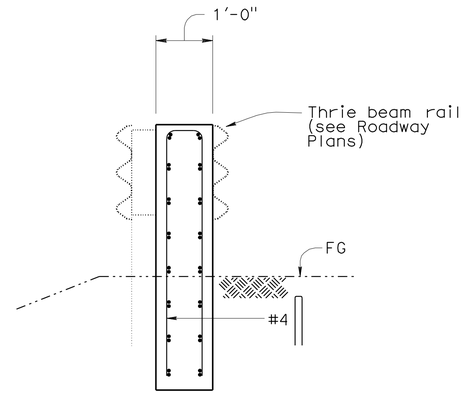


## SECTION A-A
no scale

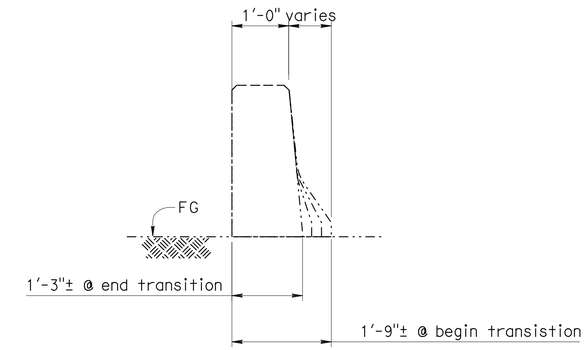


## TYPICAL SECTION EXISTING CONCRETE BARRIER TYPE 25 TRANSITION
no scale

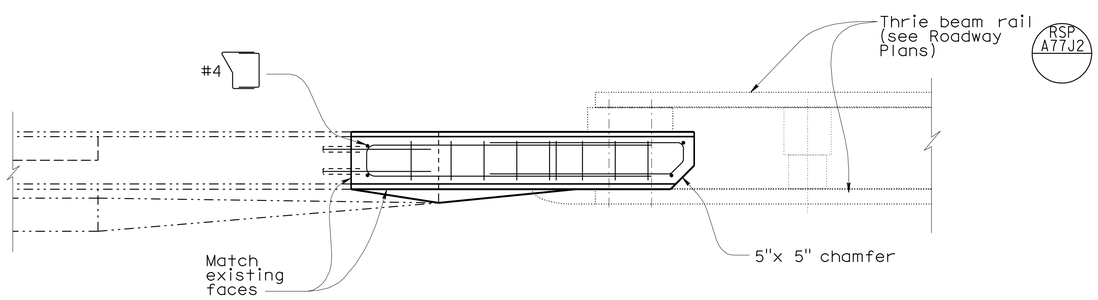


## PLAN
no scale

## LOCATION TABLE OF TYPE 25 BARRIER TRANSITION BLOCK (TYPE WB) APPLICATIONS

| Bridge No. | Bridge Name | Post Mile | Direction | No. of Connections (WB) | | Case |
|---|---|---|---|---|---|---|
| | | | | Leading End | Trailing End | |
| 04-0030 | Lost Man Creek | 124.71 | NB<br>SB | 1<br>1 | | 1 |

## LEGEND

Indicates existing structure

Indicates new construction

NOTES:

1. For limits of excavation and backfill see Standard Plans May 2006 A62C, Section E-E.
2. See Roadway Plans for work locations.
3. Epoxy fill drilled holes for bolts used to fasten MBGR to existing end block, unless holes were cast using pipe sleeves.

| | BY | CHECKED |
|---|---|---|
| DESIGN | N KANEPATHIPILLAI | J MAGANA |
| DETAILS | P C W/B EDWARDS | N KANEPATHIPILLAI |
| QUANTITIES | J. MAGANA/P C WELLS | N K P/D SANDHU |

STATE OF CALIFORNIA DEPARTMENT OF TRANSPORTATION

DIVISION OF ENGINEERING SERVICES STRUCTURE DESIGN
SPECIAL DESIGN BRANCH

BRIDGE NO. Varies
POST MILE Varies

# TYPE 25 BARRIER (CASE 1) TRANSITION ANCHOR BLOCK DETAILS

STRUCTURES DESIGN SPECIAL DESIGN SHEET (ENGLISH) (REV. 10-25-05)

ORIGINAL SCALE IN INCHES FOR REDUCED PLANS 0 1 2 3

CU 01
EA 464001

DISREGARD PRINTS BEARING EARLIER REVISION DATES 3/16/09

REVISION DATES

SHEET 5 OF 11

FILE => kbar04.dgn

USERNAME => trmikesl DATE PLOTTED => 23-SEP-2009 TIME PLOTTED => 07:00

| DIST | COUNTY | ROUTE | POST MILES TOTAL PROJECT | SHEET No | TOTAL SHEETS |
|---|---|---|---|---|---|
| 01 | Hum | 101 | T0.2/R126.0 | 68 | 72 |

REGISTERED CIVIL ENGINEER 3/16/09 DATE

9-21-09
PLANS APPROVAL DATE

REGISTERED PROFESSIONAL ENGINEER JOEL MAGANA No. C61500 Exp. 6/30/11 CIVIL STATE OF CALIFORNIA

*The State of California or its officers or agents shall not be responsible for the accuracy or completeness of electronic copies of this plan sheet.*

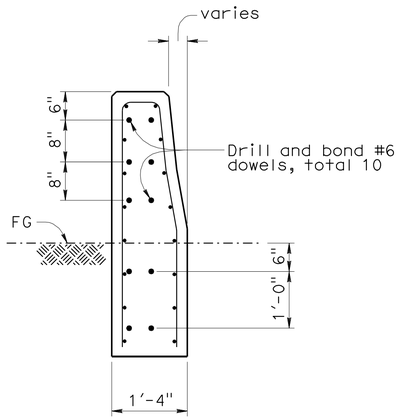


## SECTION A-A
no scale

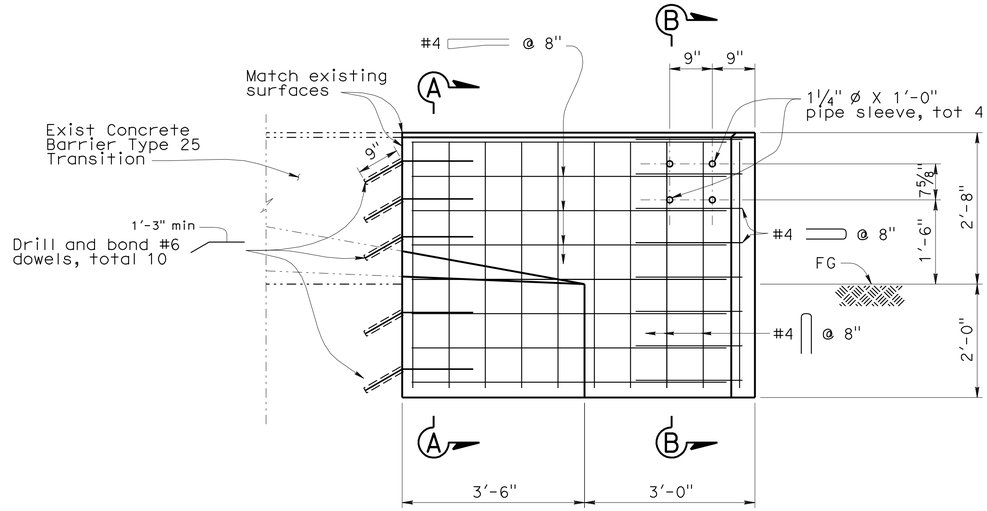


## ELEVATION
no scale

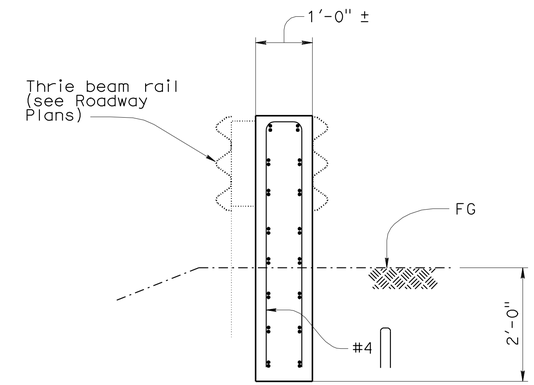


## SECTION B-B
no scale

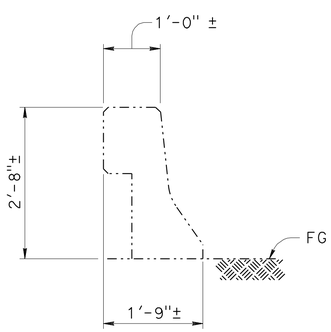


## TYPICAL SECTION EXISTING CONCRETE BARRIER TYPE 25
no scale

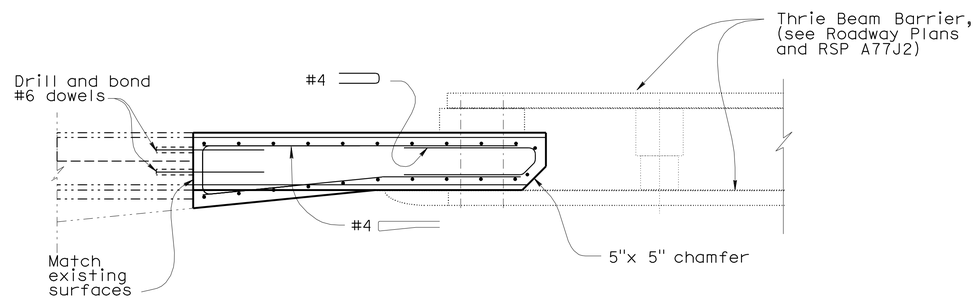


## PLAN
no scale

## LEGEND

-·-·-·-·-·- Indicates existing structure

———————— Indicates new construction

## LOCATION TABLE OF TYPE 25 BARRIER TRANSITION BLOCK (TYPE WB) APPLICATIONS

| Bridge No. | Bridge Name | Post Mile | Direction | No. of Connections (WB) | | Case |
|---|---|---|---|---|---|---|
| | | | | Leading End | Trailing End | |
| 04-0241 | South Fork Eel River Bridge | 5.63 | NB<br>SB | 1<br>1 | 1 | 2 |

NOTES:

1. For limits of excavation and backfill see Standard Plans May 2006 A62C, Section E-E.
2. See Roadway Plans for work locations.

**THE CONTRACTOR SHALL VERIFY ALL CONTROLLING FIELD DIMENSIONS BEFORE ORDERING OR FABRICATING ANY MATERIAL.**

| | BY | CHECKED |
|---|---|---|
| DESIGN | N KANEPATHIPILLAI | J MAGANA |
| DETAILS | P C W/ B EDWARDS | N KANEPATHIPILLAI |
| QUANTITIES | J MAGANA/P WELLS | NKP/D SANDHU |

STATE OF CALIFORNIA
DEPARTMENT OF TRANSPORTATION

DIVISION OF ENGINEERING SERVICES
STRUCTURE DESIGN
SPECIAL DESIGN BRANCH

BRIDGE NO. Varies
POST MILE Varies

# TYPE 25 BARRIER (CASE 2)
# TRANSITION ANCHOR BLOCK DETAILS

STRUCTURES DESIGN SPECIAL DESIGN SHEET (ENGLISH) (REV. 10-25-05)

ORIGINAL SCALE IN INCHES FOR REDUCED PLANS 0 1 2 3

CU 01
EA 464001

DISREGARD PRINTS BEARING EARLIER REVISION DATES → 3/16/09

REVISION DATES

SHEET 6 OF 11

FILE => kbar05.dgn

USERNAME => trmikesl DATE PLOTTED => 23-SEP-2009 TIME PLOTTED => 07:00

| DIST | COUNTY | ROUTE | POST MILES TOTAL PROJECT | SHEET No | TOTAL SHEETS |
|---|---|---|---|---|---|
| 01 | Hum | 101 | T0.2/R126.0 | 69 | 72 |

REGISTERED CIVIL ENGINEER 3/16/09 DATE

9-21-09
PLANS APPROVAL DATE

REGISTERED PROFESSIONAL ENGINEER JOEL MAGANA No. C61500 Exp. 6/30/11 CIVIL STATE OF CALIFORNIA

*The State of California or its officers or agents shall not be responsible for the accuracy or completeness of electronic copies of this plan sheet.*

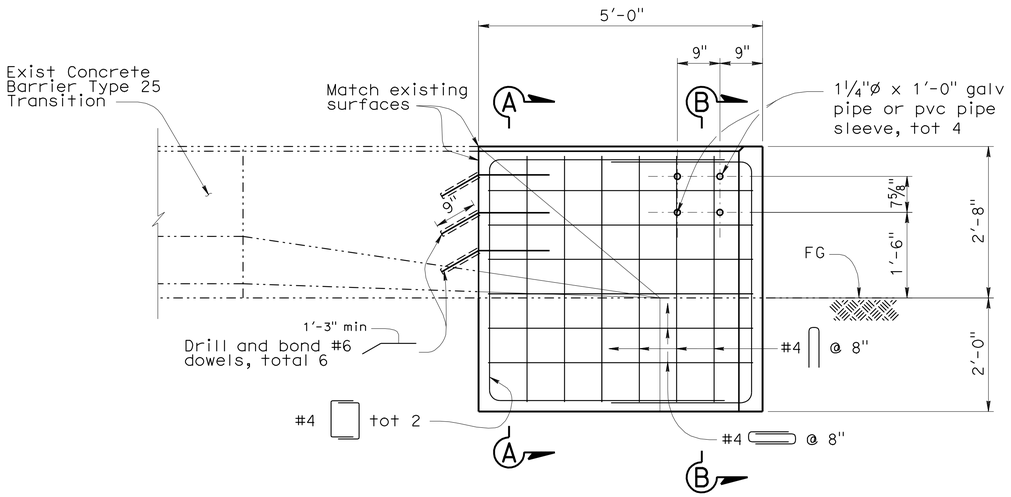


## ELEVATION
no scale

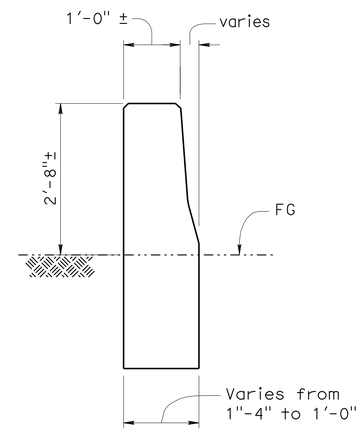


## SECTION A-A
no scale

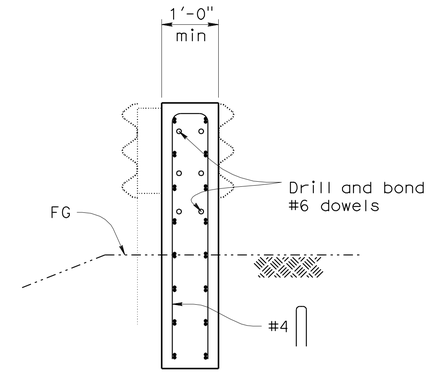


## SECTION B-B
no scale

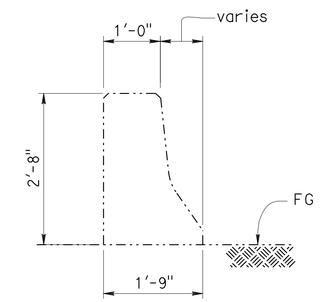


## TYPICAL SECTION EXISTING CONCRETE BARRIER TYPE 25
no scale

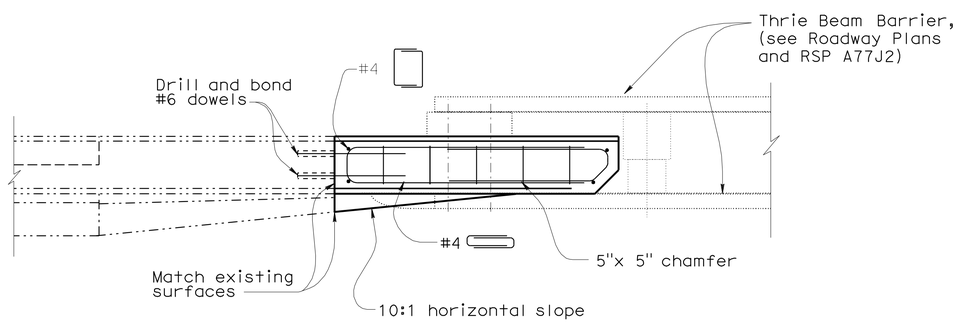


## PLAN
no scale

## LEGEND

-·-·-·-·-·- Indicates existing structure

——————— Indicates new construction

LOCATION TABLE OF TYPE 25 BARRIER TRANSITION BLOCK (TYPE WB) APPLICATIONS

| Bridge No. | Bridge Name | Post Mile | Direction | No. of Connections (WB) | | Case |
|---|---|---|---|---|---|---|
| | | | | Leading End | Trailing End | |
| 04-0034 | Redwood Creek Overflow | 120.02 | NB<br>SB | 1<br>1 | | 3 |
| 04-0029 | Prairie Creek | 122.86 | NB<br>SB | 1<br>1 | | 3 |

NOTES:

1. For limits of excavation and backfill, see Standard Plans May 2006 A62C, SECTION E-E.
2. See roadway Plans for work locations.
3. Epoxy fill drilled holes for bolts used to fasten MBGR to existing end block, unless holes were cast using pipe sleeves.

**THE CONTRACTOR SHALL VERIFY ALL CONTROLLING FIELD DIMENSIONS BEFORE ORDERING OR FABRICATING ANY MATERIAL.**

| | BY | CHECKED |
|---|---|---|
| DESIGN | N KANEPATHIPILLAI | J MAGANA |
| DETAILS | P C W/B EDWARDS | N KANEPATHIPILLAI |
| QUANTITIES | J MAGANA/P WELLS | NKP/D SANDHU |

STATE OF CALIFORNIA DEPARTMENT OF TRANSPORTATION

DIVISION OF ENGINEERING SERVICES STRUCTURE DESIGN
SPECIAL DESIGN BRANCH

BRIDGE NO. Varies
POST MILE Varies

# TYPE 25 BARRIER (CASE 3)
# TRANSITION ANCHOR BLOCK DETAILS

STRUCTURES DESIGN SPECIAL DESIGN SHEET (ENGLISH) (REV. 10-25-05)

ORIGINAL SCALE IN INCHES FOR REDUCED PLANS 0 1 2 3

CU 01
EA 464001

DISREGARD PRINTS BEARING EARLIER REVISION DATES → 3/16/09

REVISION DATES

SHEET 7 OF 11

FILE => kbar06.dgn

USERNAME => trmikesl DATE PLOTTED => 23-SEP-2009 TIME PLOTTED => 07:01

| DIST | COUNTY | ROUTE | POST MILES TOTAL PROJECT | SHEET No | TOTAL SHEETS |
|---|---|---|---|---|---|
| 01 | Hum | 101 | T0.2/R126.0 | 70 | 72 |

REGISTERED CIVIL ENGINEER 3/16/09 DATE

9-21-09
PLANS APPROVAL DATE

REGISTERED PROFESSIONAL ENGINEER JOEL MAGANA No. C61500 Exp. 6/30/11 CIVIL STATE OF CALIFORNIA

*The State of California or its officers or agents shall not be responsible for the accuracy or completeness of electronic copies of this plan sheet.*

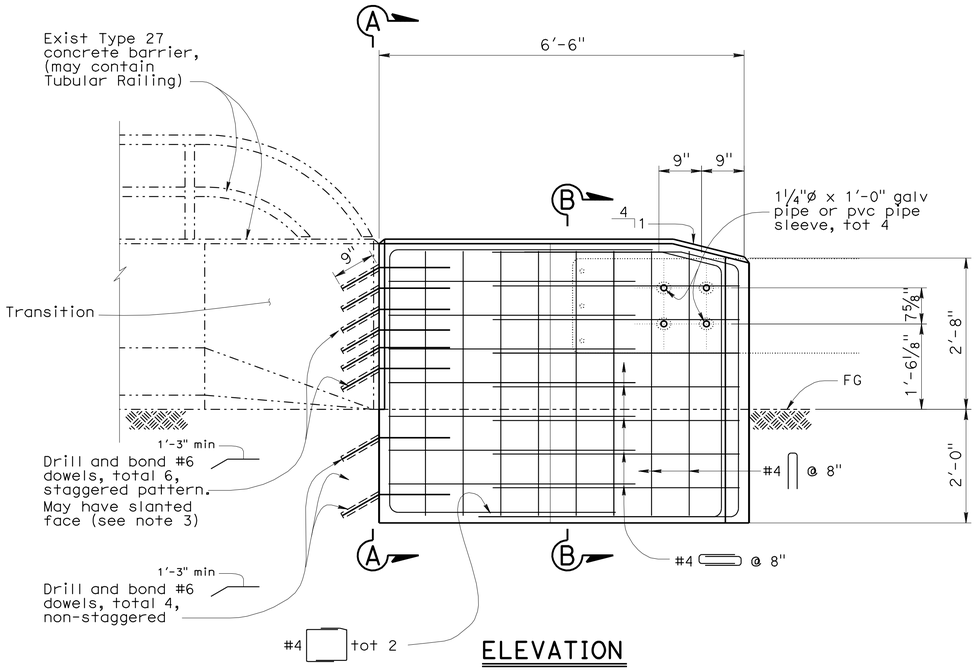


## ELEVATION
no scale

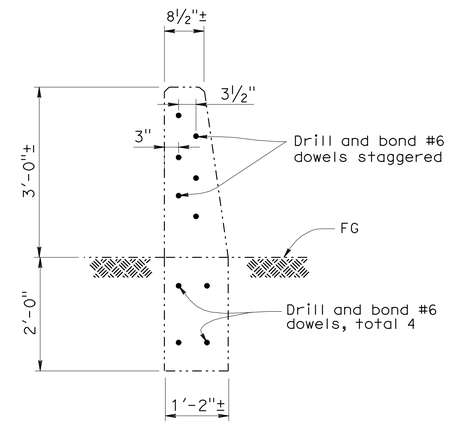


## SECTION A-A
no scale

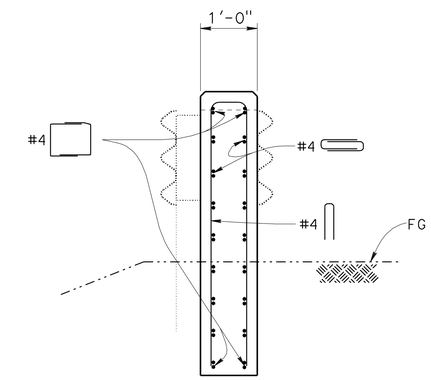


## SECTION B-B
no scale

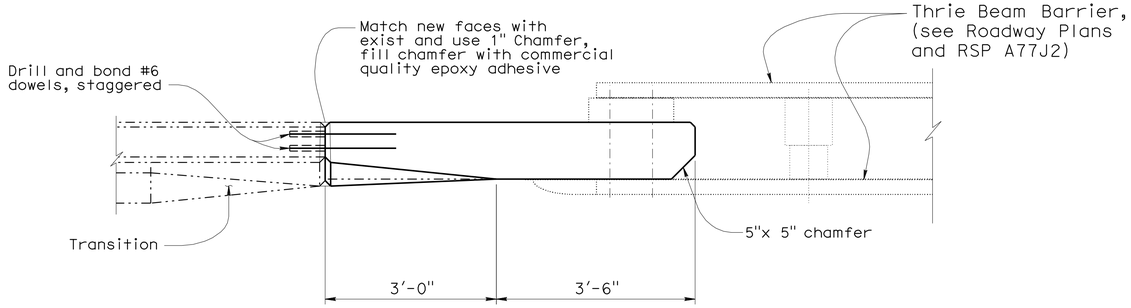


## PLAN
no scale

## LEGEND

-·-·-·-·-·- Indicates existing structure

——————— Indicates new construction

LOCATION TABLE OF TYPE 27 (CASE 1)
BARRIER TRANSITION BLOCK APPLICATION

| Bridge No. | Bridge Name | Post Mile | Direction | No. of Connections (WB) | | Case |
|---|---|---|---|---|---|---|
| | | | | Leading End | Trailing End | |
| 04-0113 | Finch Creek Rd UC | 63.1 | NB<br>SB | 1<br>1 | | 1 |
| 04-0112 | Palmer Blvd UC | 62.23 | NB<br>SB | 1<br>1 | | 1 |

NOTES:

1. For limits of excavation and backfill see Standard Plans May 2006 A62C, Section E-E.
2. See Roadway Plans for work locations.
3. Vertical face shown. Drill and bond #6 dowels staggered pattern along slanted face where applicable.
4. Epoxy fill drilled holes for bolts used to fasten MBGR to existing end block, unless holes were cast using pipe sleeves.

**THE CONTRACTOR SHALL VERIFY ALL CONTROLLING FIELD DIMENSIONS BEFORE ORDERING OR FABRICATING ANY MATERIAL.**

| | BY | CHECKED |
|---|---|---|
| DESIGN | N KANEPATHIPILLAI | J MAGANA |
| DETAILS | P C W/B EDWARDS | N KANEPATHIPILLAI |
| QUANTITIES | J MAGANA/P WELLS | NKP/D SANDHU |

STATE OF CALIFORNIA
DEPARTMENT OF TRANSPORTATION

DIVISION OF ENGINEERING SERVICES
STRUCTURE DESIGN
SPECIAL DESIGN BRANCH

BRIDGE NO. varies
POST MILE varies

# TYPE 27 BARRIER (CASE 1)
# TRANSITION ANCHOR BLOCK DETAILS

STRUCTURES DESIGN SPECIAL DESIGN SHEET (ENGLISH) (REV. 10-25-05)

ORIGINAL SCALE IN INCHES FOR REDUCED PLANS 0 1 2 3

CU 01
EA 464001

DISREGARD PRINTS BEARING EARLIER REVISION DATES → 3/5/09 3/18/09 3/16/09

SHEET 8 OF 11

FILE => kbar07.dgn

USERNAME => trmikesi DATE PLOTTED => 23-SEP-2009 TIME PLOTTED => 07:01

| DIST | COUNTY | ROUTE | POST MILES TOTAL PROJECT | SHEET No | TOTAL SHEETS |
|---|---|---|---|---|---|
| 01 | Hum | 101 | T0.2/R126.0 | 71 | 72 |

REGISTERED CIVIL ENGINEER 3/16/09 DATE

9-21-09
PLANS APPROVAL DATE

REGISTERED PROFESSIONAL ENGINEER JOEL MAGANA No. C61500 Exp. 6/30/11 CIVIL STATE OF CALIFORNIA

*The State of California or its officers or agents shall not be responsible for the accuracy or completeness of electronic copies of this plan sheet.*

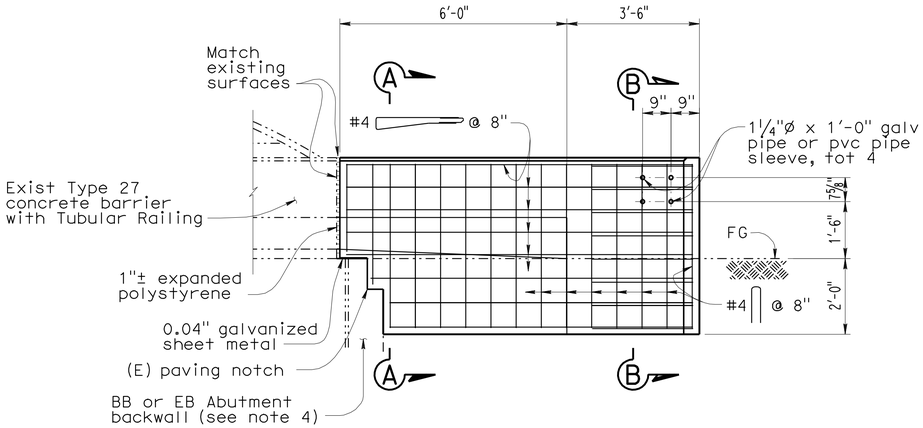


## ELEVATION

no scale

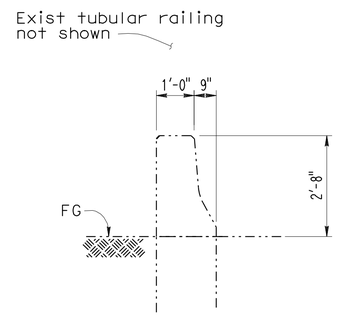


## TYPICAL SECTION EXISTING CONCRETE BARRIER TYPE 27

no scale

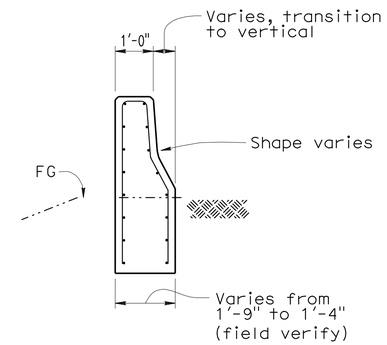


## SECTION A-A

no scale

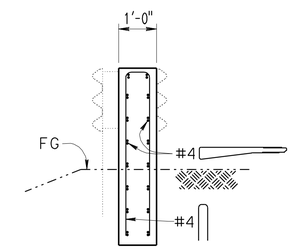


## SECTION B-B

no scale

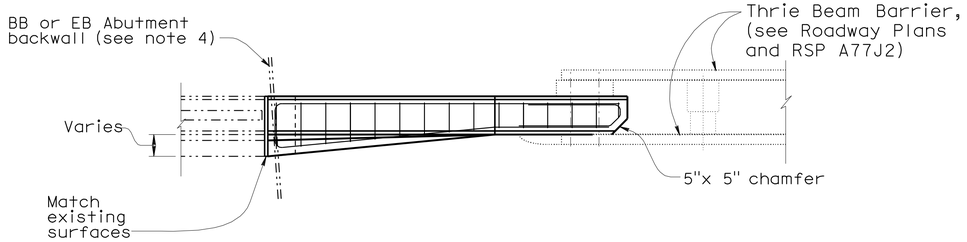


## PLAN

no scale

LOCATION TABLE OF TYPE 25 BARRIER TRANSITION BLOCK (TYPE WB) APPLICATIONS

| Bridge No. | Bridge Name | Post Mile | Direction | No. of Connections (WB) | | Case |
|---|---|---|---|---|---|---|
| | | | | Leading End | Trailing End | |
| 04-0028 | Redwood Creek Bridge | 121.09 | NB<br>SB | 1<br>1 | 1<br>1 | 2 |

## LEGEND

Indicates existing structure

Indicates new construction

NOTES:

1. For limits of excavation and backfill see Standard Plans A62C, Section E-E.
2. See Roadway Plans for work locations.
3. For exist barriers transitioned to slant or vertical, make new anchor block to match exist surfaces.
4. During excavation ensure no damage to abutment backwall. As-builts show Abutment backwall ends 1'-0" beyond joint seal.
5. Epoxy fill drilled holes for bolts used to fasten MBGR to existing end block, unless holes were cast using pipe sleeves.

**THE CONTRACTOR SHALL VERIFY ALL CONTROLLING FIELD DIMENSIONS BEFORE ORDERING OR FABRICATING ANY MATERIAL.**

| | BY | CHECKED |
|---|---|---|
| DESIGN | N KANEPATHIPILLAI | J MAGANA |
| DETAILS | P C W/B EDWARDS | N KANEPATHIPILLAI |
| QUANTITIES | J MAGANA/P WELLS | NKP/D SANDHU |

STATE OF CALIFORNIA DEPARTMENT OF TRANSPORTATION

DIVISION OF ENGINEERING SERVICES STRUCTURE DESIGN SPECIAL DESIGN BRANCH

BRIDGE NO. varies
POST MILE varies

# TYPE 27 BARRIER (CASE 2) TRANSITION ANCHOR BLOCK DETAILS

STRUCTURES DESIGN SPECIAL DESIGN SHEET (ENGLISH) (REV. 10-25-05)

ORIGINAL SCALE IN INCHES FOR REDUCED PLANS 0 1 2 3

CU 01
EA 464001

DISREGARD PRINTS BEARING EARLIER REVISION DATES 3/5/09 3/18/09 3/16/09

REVISION DATES

SHEET 9 OF 11

FILE => kbar08.dgn

USERNAME => trmikesl DATE PLOTTED => 23-SEP-2009 TIME PLOTTED => 07:01

| DIST | COUNTY | ROUTE | POST MILES TOTAL PROJECT | SHEET No | TOTAL SHEETS |
|---|---|---|---|---|---|
| 01 | Hum | 101 | T0.2/R126.0 | 72 | 72 |

REGISTERED CIVIL ENGINEER 3/16/09 DATE

9-21-09
PLANS APPROVAL DATE

REGISTERED PROFESSIONAL ENGINEER JOEL MAGANA No. C61500 Exp. 6/30/11 CIVIL STATE OF CALIFORNIA

*The State of California or its officers or agents shall not be responsible for the accuracy or completeness of electronic copies of this plan sheet.*

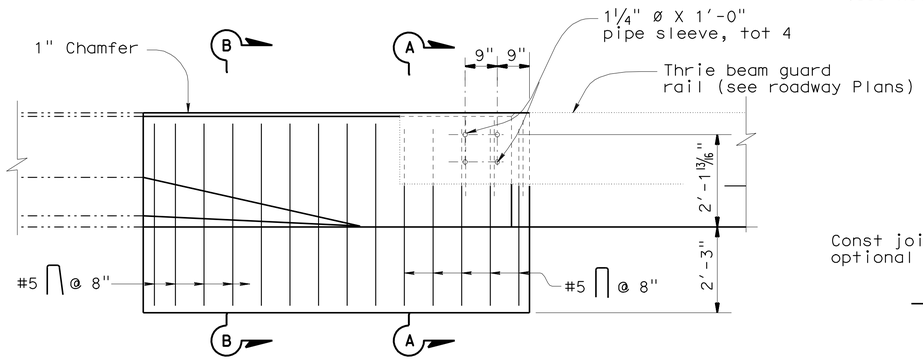


## ELEVATION
No Scale

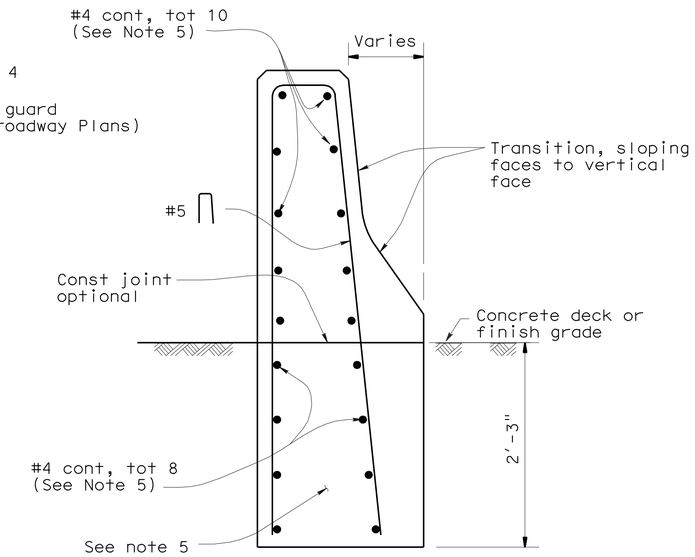


## SECTION B-B
No Scale

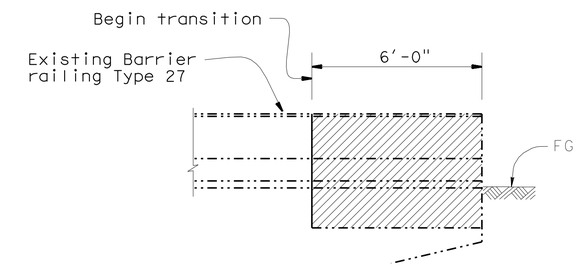


## CONCRETE REMOVAL
No Scale

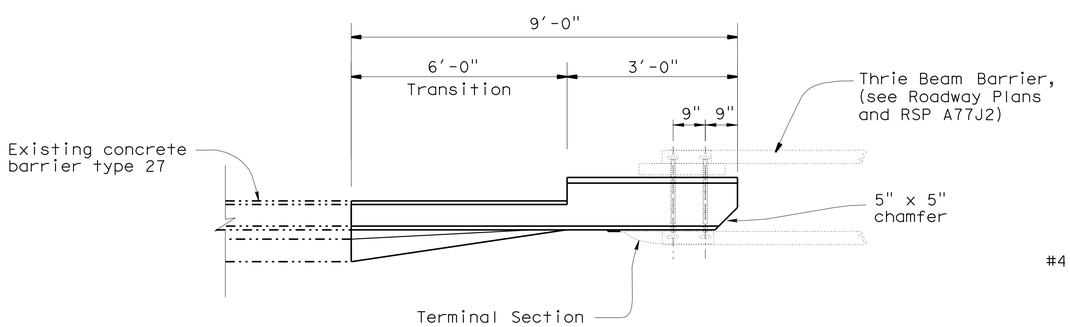


## PLAN
No Scale

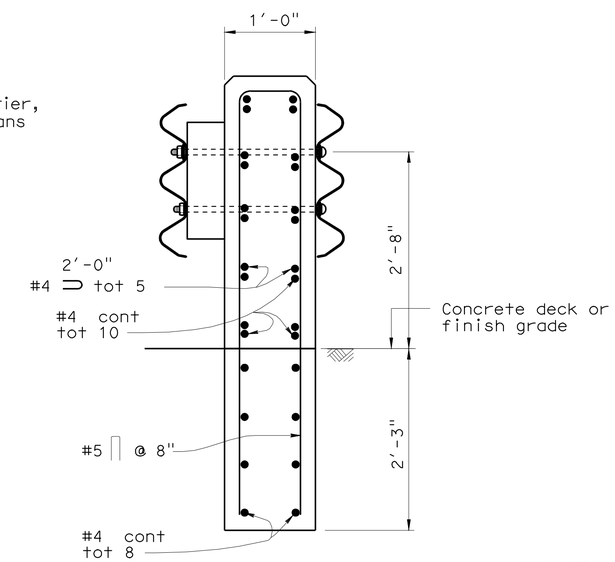


## SECTION A-A
No Scale

Notes:

1. For details not shown, see Standard Plans.
2. Dependent dimensions will be verified in the field before fabricating any end connection to conform with existing paved conditions.
3. For Thrie Beam Connection, see Standard Plans "Thrie Beam Barrier Connections To Bridge Railing"
4. All plates and bolts are galvanized.
5. Cut and remove portion of Type 27 as shown, Existing reinf to remain.
6. For limits of excavation and backfill see Standard Plans May 2006 A62C, Section E-E.
7. See Roadway Plans for work locations.

Legend:

- Indicates existing structure.
- Indicates new construction.
- Concrete removal.

STANDARD PLAN SHEET NO.

DETAIL NO.

LOCATION TABLE OF TYPE 27 BARRIER TRANSITION BLOCK APPLICATIONS

| Bridge No. | Bridge Name | Post Mile | Direction | No. of Connections (WB) | | Case |
|---|---|---|---|---|---|---|
| | | | | Leading End | Trailing End | |
| 04-0071 | Sruce Point OC | 73.7 | NB<br>SB | 1<br>1 | | 3 |

| | BY | CHECKED |
|---|---|---|
| DESIGN | N KANEPATHIPILLAI | J MAGANA |
| DETAILS | BOB EDWARDS | N KANEPATHIPILLAI |
| QUANTITIES | J. MAGANA/P C WELLS | N K P/D SANDHU |

STATE OF CALIFORNIA
DEPARTMENT OF TRANSPORTATION

DIVISION OF ENGINEERING SERVICES
STRUCTURE DESIGN
SPECIAL DESIGN BRANCH

BRIDGE NO. Varies
POST MILE Varies

# TYPE 27 BARRIER (CASE 3)
# TRANSITION ANCHOR BLOCK DETAILS

STRUCTURES DESIGN SPECIAL DESIGN SHEET (ENGLISH) (REV. 10-25-05)

ORIGINAL SCALE IN INCHES FOR REDUCED PLANS 0 1 2 3

CU 01
EA 464001

DISREGARD PRINTS BEARING EARLIER REVISION DATES 3/16/09

REVISION DATES

SHEET 10 OF 11

FILE => kbar09.dgn

USERNAME => trmikes1 DATE PLOTTED => 23-SEP-2009 TIME PLOTTED => 07:01