Dist	COUNTY	ROUTE	POST MILES TOTAL PROJECT	SHEET No.	TOTAL SHEETS
01	Men	101	21.1/33.7	1	22

NH-Q101(168)E
SARRA-Q101(170)E

STATE OF CALIFORNIA
DEPARTMENT OF TRANSPORTATION

PROJECT PLANS FOR CONSTRUCTION ON
STATE HIGHWAY
IN MENDOCINO COUNTY
NEAR UKIAH
FROM 0.2 MILE NORTH OF ROBINSON CREEK BRIDGE
TO 0.2 MILE SOUTH OF UVA DRIVE

TO BE SUPPLEMENTED BY STANDARD PLANS DATED MAY 2006

INDEX OF PLANS

SHEET No.	DESCRIPTION
1	TITLE AND LOCATION MAP
2	LOCATIONS OF CONSTRUCTION
3-5	CONSTRUCTION DETAILS
6	CONSTRUCTION AREA SIGNS
7-8	STAGE CONSTRUCTION PLANS
9-15	DETOUR PLANS, LAYOUT, PROFILE
16	PAVEMENT DELINEATION PLANS, DETAILS AND QUANTITIES
17-18	SUMMARY OF QUANTITIES
19-22	REVISED STANDARD PLANS

THE STANDARD PLANS LIST APPLICABLE TO THIS CONTRACT IS INCLUDED IN THE NOTICE TO BIDDERS AND SPECIAL PROVISIONS BOOK.

LOCATION MAP

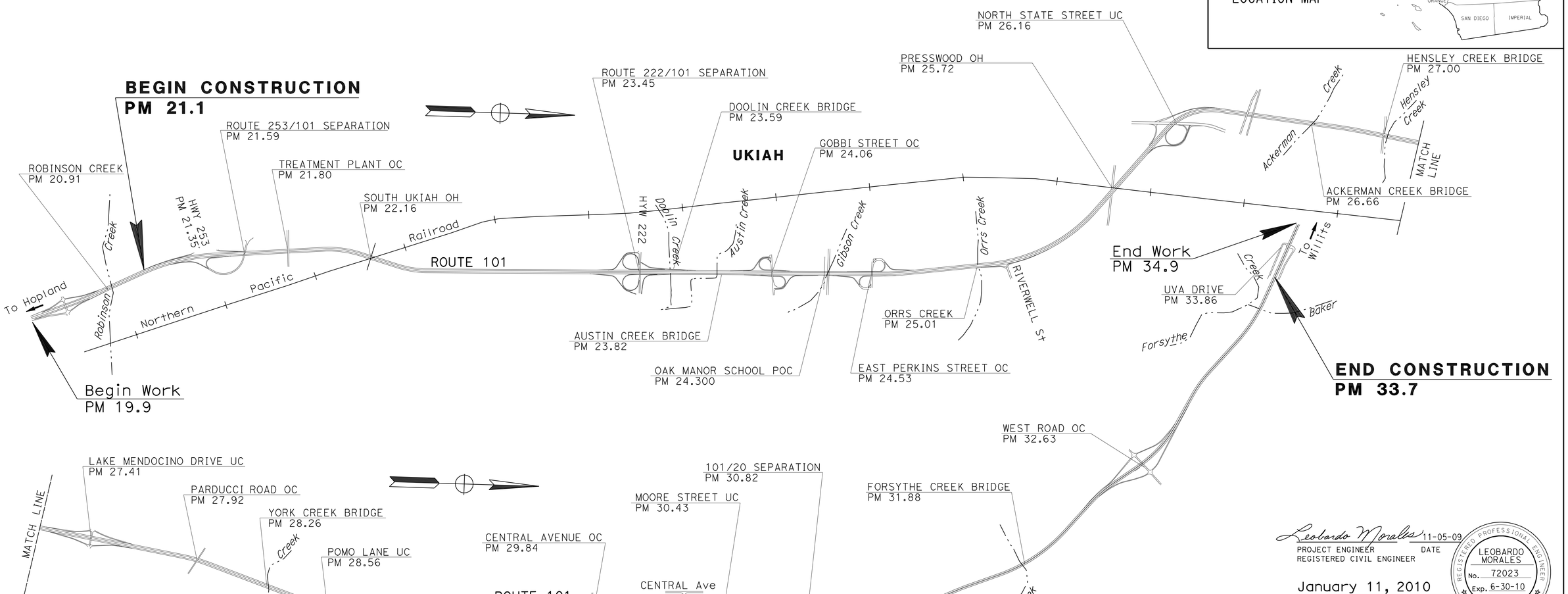

THE CONTRACTOR SHALL POSSESS THE CLASS (OR CLASSES) OF LICENSE AS SPECIFIED IN THE "NOTICE TO BIDDERS."

Leobardo Morales 11-05-09
PROJECT ENGINEER DATE
REGISTERED CIVIL ENGINEER

REGISTERED PROFESSIONAL ENGINEER
LEOBARDO MORALES
No. 72023
Exp. 6-30-10
CIVIL
STATE OF CALIFORNIA

January 11, 2010
PLANS APPROVAL DATE

THE STATE OF CALIFORNIA OR ITS OFFICERS OR AGENTS SHALL NOT BE RESPONSIBLE FOR THE ACCURACY OR COMPLETENESS OF SCANNED COPIES OF THIS PLAN SHEET.

PROJECT MANAGER GRACE KIM TELL
DESIGN ENGINEER NESAR FORMOLI

LAST REVISION 00-00-00
DATE PLOTTED => 17-MAR-2010
TIME PLOTTED => 06:06

CONTRACT No. **01-449404**

Dist	COUNTY	ROUTE	POST MILES TOTAL PROJECT	SHEET No.	TOTAL SHEETS
01	Men	101	21.1/33.7	2	22

REGISTERED CIVIL ENGINEER 11-5-09 DATE

1-11-10
PLANS APPROVAL DATE

REGISTERED PROFESSIONAL ENGINEER LEOBARDO MORALES No. 72023 Exp. 6-30-10 CIVIL STATE OF CALIFORNIA

THE STATE OF CALIFORNIA OR ITS OFFICERS OR AGENTS SHALL NOT BE RESPONSIBLE FOR THE ACCURACY OR COMPLETENESS OF SCANNED COPIES OF THIS PLAN SHEET.

NOTES:

EXISTING UTILITY FACILITIES HAVE NOT BEEN PLOTTED ON THESE PLANS.

1. EXACT CASE AND LOCATION OF THE SLAB REPLACEMENT TO BE DETERMINED BY THE RESIDENT ENGINEER.
2. THE NORTHBOUND AND SOUTHBOUND PCC LANES FROM PM 21.1 TO 33.7 WILL BE PROFILE GROUND AFTER SLAB REPLACEMENT IS COMPLETED.
3. REMOVE EXISTING AC DIKE AND REPLACE WITH HMA DIKE (TYPE E). SEE SUMMARY OF QUANTITIES FOR EXACT LOCATIONS.
4. REMOVE AND CAP ANY EDGE DRAIN ENCOUNTERED DURING SLAB REPLACEMENT.
5. FOG SEAL SHOULDERS, SEE SUMMARY OF QUANTITIES.
6. RUMBLE STRIP, SEE CONSTRUCTION DETAILS.

DESIGN DESIGNATION:

20 YEAR TI=12
ADT(2007)=29,200
ADT(2011)=33,100
ADT(2021)=43,000
ADT(2031)=52,900

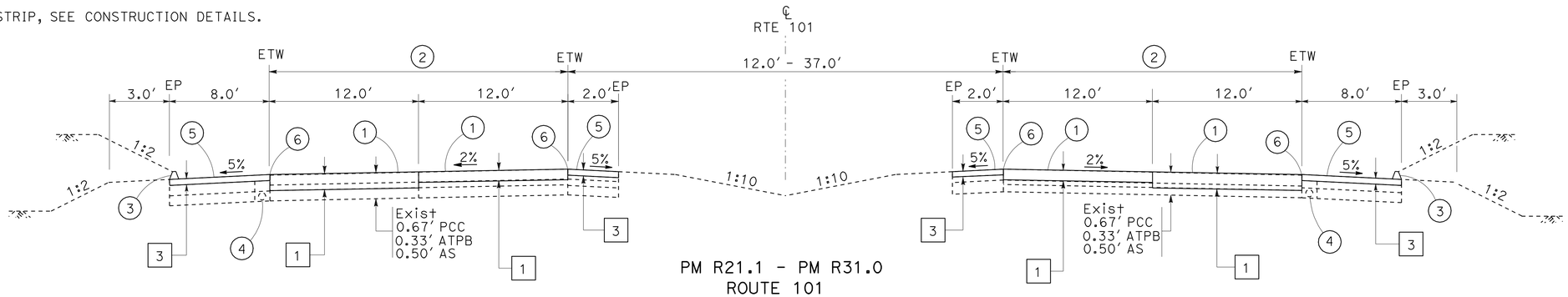

PM R21.1 - PM R31.0
ROUTE 101

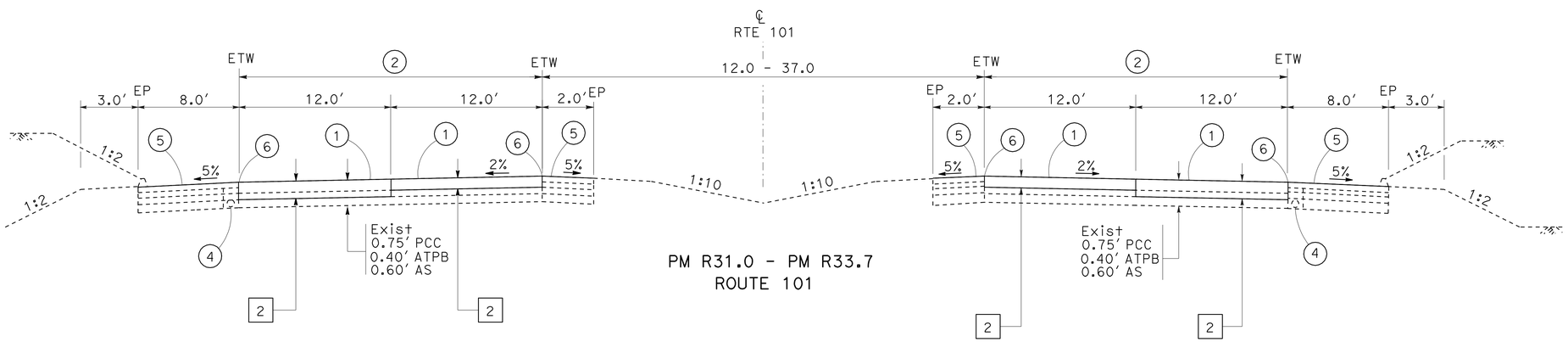

PM R31.0 - PM R33.7
ROUTE 101

SLAB REPLACEMENT

PM R21.1 - PM R31.0

1 CASE (A)

REMOVE EXISTING SHATTERED PANELS WITH NO DIFFERENTIAL SETTLEMENT AND REPLACE WITH 0.67' PCC

CASE (B)

SHATTERED PANELS WITH DIFFERENTIAL SETTLEMENT- REMOVE EXISTING PCC AND ATPB. REPLACE WITH FULL DEPTH PCC OF 1.00'

PM R31.0 - PM R33.7

2 CASE (A)

REMOVE EXISTING SHATTERED PANELS WITH NO DIFFERENTIAL SETTLEMENT AND REPLACE WITH 0.75' PCC

CASE (B)

SHATTERED PANELS WITH DIFFERENTIAL SETTLEMENT. REMOVE EXISTING PCC AND ATPB. REPLACE WITH 1.15' OF PCC

SHOULDERS

3 0.2' COLD PLANE HMA
0.2' HMA (TYPE A)

LOCATION	SHOULDER TYPE
PM 21.1 - PM 31.0	INSIDE
PM 21.1 - PM 23.9	OUTSIDE

SLAB REPLACEMENT DATA

FROM PM 21.1 TO 31.0	FROM PM 31.0 TO 33.7
CASE A: CRACKED SLAB, WITH NO SETTLEMENT	CASE A: CRACKED SLAB, WITH NO SETTLEMENT
LANE WIDTH = 12 ft	LANE WIDTH = 12 ft
PCC DEPTH = 0.67 ft	PCC DEPTH = 0.75 ft
AVERAGE LENGTH = 15.6 ft	AVERAGE LENGTH = 15.6 ft
CASE B: CRACKED SLAB, WITH SETTLEMENT	CASE B: CRACKED SLAB, WITH SETTLEMENT
LANE WIDTH = 12 ft	LANE WIDTH = 12 ft
PCC DEPTH = 1.00 ft	PCC DEPTH = 1.15 ft
AVERAGE LENGTH = 15.6 ft	AVERAGE LENGTH = 15.6 ft

TYPICAL CROSS SECTIONS

NO SCALE

X-1

STATE OF CALIFORNIA - DEPARTMENT OF TRANSPORTATION
Caltrans
NORTH REGION
OFFICE OF DESIGN, SOUTH
DESIGN BRANCH S14

FUNCTIONAL SUPERVISOR: NESAR FORMOLI
CALCULATED-DESIGNED BY: L. MORALES
CHECKED BY: N. FORMOLI
REVISED BY
DATE REVISED

LAST REVISION 11-05-09
DATE PLOTTED => 12-JAN-2010
TIME PLOTTED => 13:24

Dist	COUNTY	ROUTE	POST MILES TOTAL PROJECT	SHEET No.	TOTAL SHEETS
01	Men	101	21.1/33.7	3	22

Leobardo Morales 11-5-09
REGISTERED CIVIL ENGINEER DATE

1-11-10
PLANS APPROVAL DATE

REGISTERED PROFESSIONAL ENGINEER
LEOBARDO MORALES
No. 72023
Exp. 6-30-10
CIVIL
STATE OF CALIFORNIA

THE STATE OF CALIFORNIA OR ITS OFFICERS OR AGENTS SHALL NOT BE RESPONSIBLE FOR THE ACCURACY OR COMPLETENESS OF SCANNED COPIES OF THIS PLAN SHEET.

NOTES:

1. ALL RUMBLE STRIP AREAS SHOWN ON PLAN SHEETS SHALL BE VERIFIED WITH THE APPROPRIATE HIGHWAY MAINTENANCE SUPERVISOR TO ASSURE THAT PLANNED INSTALLATION LOCATIONS WILL NOT IMPEDE FUTURE HIGHWAY MAINTENANCE WORK ACTIVITIES DURING ADVERSE WEATHER CONDITIONS.

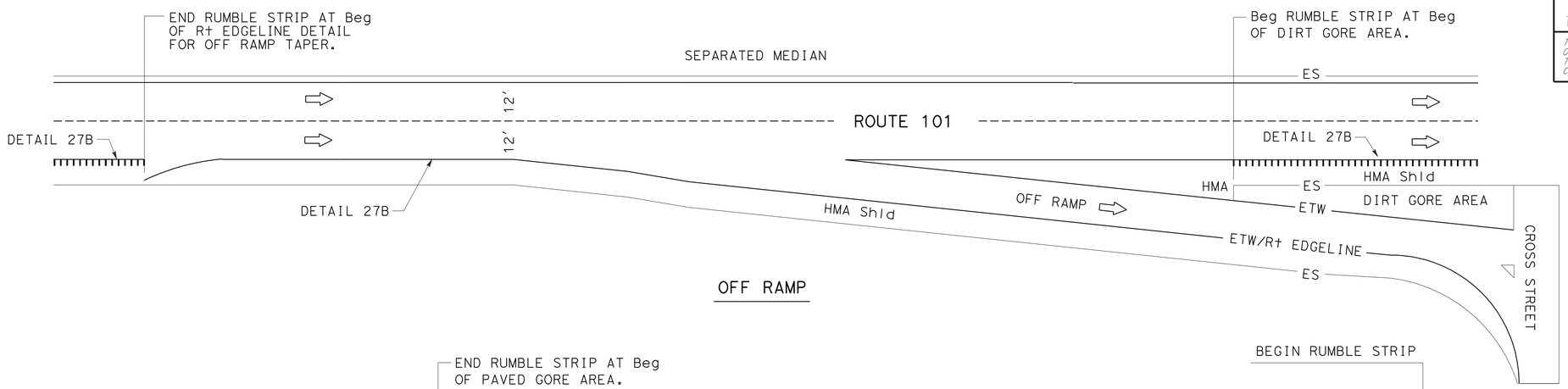

OFF RAMP

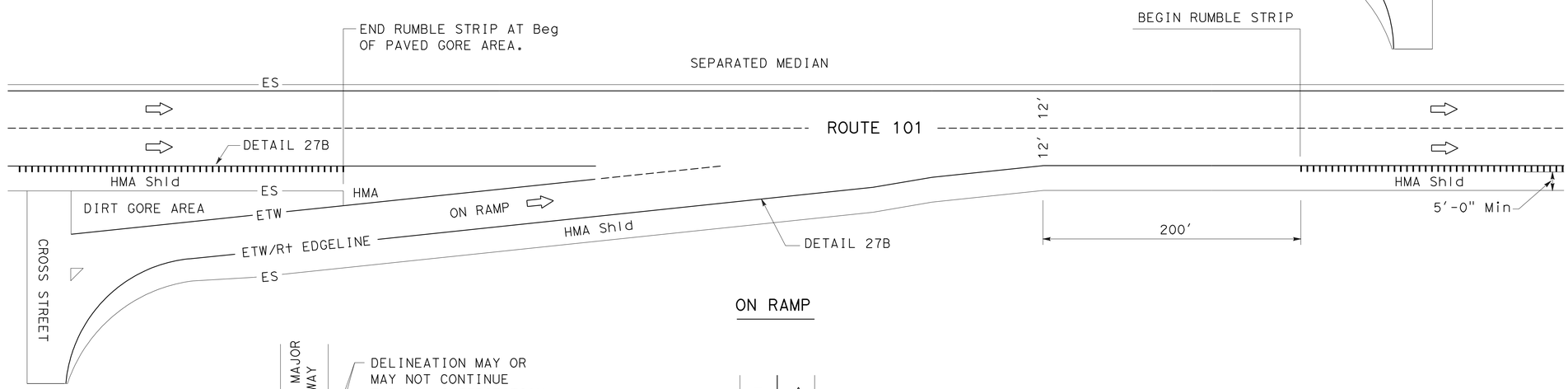

ON RAMP

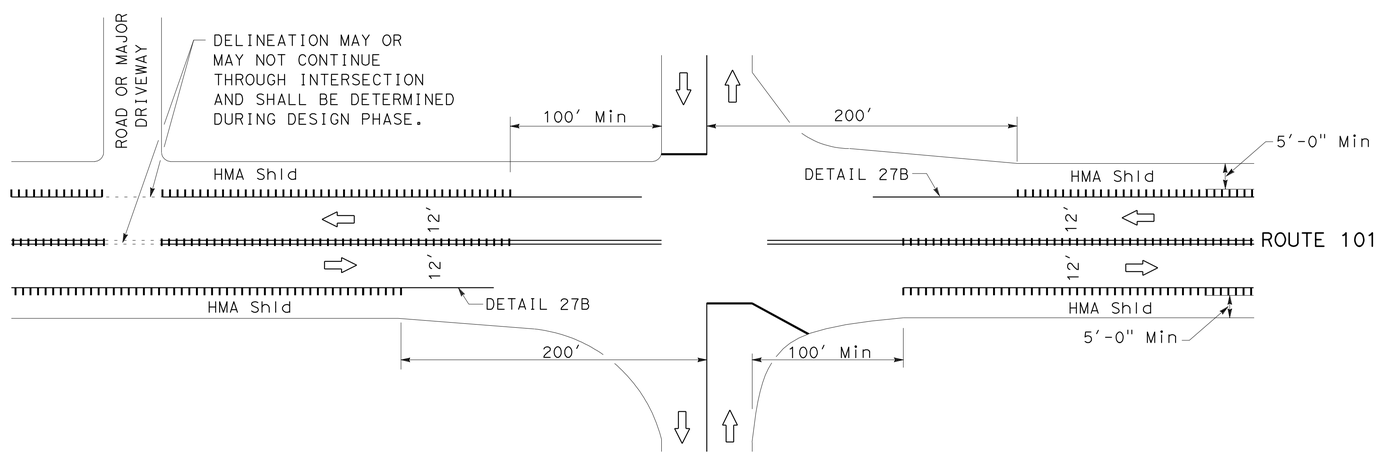

INTERSECTING ROADS AND MAJOR DRIVEWAYS

LEGEND

⇨ DIRECTION OF TRAVEL

RUMBLE STRIP (GROUND-IN)

STANDARD GROUND-IN RUMBLE STRIP
PLACEMENT AT INTERSECTING RAMPS, ROADS AND MAJOR DRIVEWAYS

CONSTRUCTION DETAILS
NO SCALE

C-1

STATE OF CALIFORNIA - DEPARTMENT OF TRANSPORTATION
NORTH REGION
OFFICE OF DESIGN, SOUTH
DESIGN BRANCH S14

FUNCTIONAL SUPERVISOR: NESAR FORMOLI
CALCULATED-DESIGNED BY: L. MORALES
CHECKED BY: N. FORMOLI
REVISED BY
DATE REVISED

LAST REVISION 11-05-09
DATE PLOTTED => 12-JAN-2010
TIME PLOTTED => 13:24

Dist	COUNTY	ROUTE	POST MILES TOTAL PROJECT	SHEET No.	TOTAL SHEETS
01	Men	101	21.1/33.7	4	22

Leobardo Morales 11-5-09
REGISTERED CIVIL ENGINEER DATE

1-11-10
PLANS APPROVAL DATE

REGISTERED PROFESSIONAL ENGINEER
LEOBARDO MORALES
No. 72023
Exp. 6-30-10
CIVIL
STATE OF CALIFORNIA

THE STATE OF CALIFORNIA OR ITS OFFICERS OR AGENTS SHALL NOT BE RESPONSIBLE FOR THE ACCURACY OR COMPLETENESS OF SCANNED COPIES OF THIS PLAN SHEET.

NOTES:

1. THIS 'ALTERNATE OUTSIDE/RIGHT SHOULDER GROUND IN RUMBLE STRIP' APPLICATION IS AVAILABLE BUT REQUIRES A COMPREHENSIVE COLLISION HISTORY EVALUATION AND DISTRICT 1 TRAFFIC SAFETY APPROVAL PRIOR TO BEING INCORPORATED INTO PROJECT PLANS.
2. RUMBLE STRIPS, AS SHOWN ON THIS PLAN SHALL NOT BE CONSTRUCTED ON BRIDGE DECKS, BRIDGE APPROACH SLABS, RAMPS, PUBLIC AND PRIVATE ROAD APPROACHES AND MAJOR (COMMERCIAL ENTRANCE OR MULTIPLE RESIDENTIAL) DRIVEWAYS.
3. OUTSIDE/RIGHT SHOULDER GROUND-IN RUMBLE STRIP DEPTH SHALL BE 5/16".
4. THE TRAVELED WAY IS PCC PAVEMENT.
5. THE RUMBLE STRIP ALONG THE OUTSIDE SHOULDER WILL BE GROUND INTO HMA AND PCC.

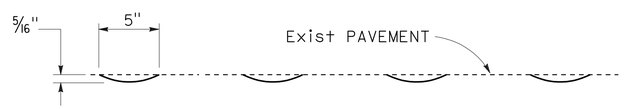

ELEVATION

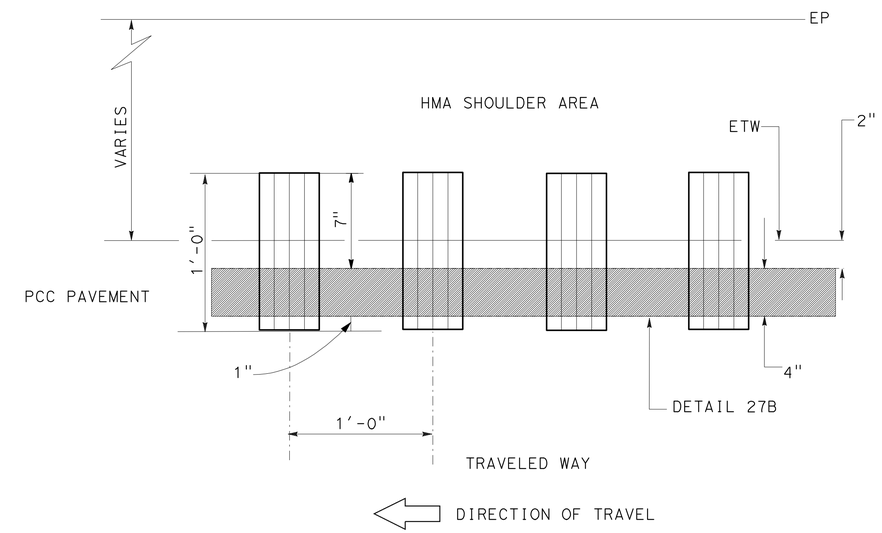

PLAN

ALTERNATE OUTSIDE/RIGHT SHOULDER GROUND-IN RUMBLE STRIP

(SEE NOTES ABOVE)

ALTERNATE GROUND-IN RUMBLE STRIP
OUTSIDE/RIGHT SHOULDER APPLICATION

CONSTRUCTION DETAILS
NO SCALE

C-2

STATE OF CALIFORNIA - DEPARTMENT OF TRANSPORTATION
Caltrans
NORTH REGION
OFFICE OF DESIGN, SOUTH
DESIGN BRANCH S14

FUNCTIONAL SUPERVISOR: NESAR FORMOLI
CALCULATED-DESIGNED BY: L. MORALES
CHECKED BY: N. FORMOLI
REVISED BY
DATE REVISED

LAST REVISION 11-05-09
DATE PLOTTED => 12-JAN-2010
TIME PLOTTED => 13:25

Dist	COUNTY	ROUTE	POST MILES TOTAL PROJECT	SHEET No.	TOTAL SHEETS
01	Men	101	21.1/33.7	5	22

Leobardo Morales 11-5-09
REGISTERED CIVIL ENGINEER DATE

1-11-10
PLANS APPROVAL DATE

REGISTERED PROFESSIONAL ENGINEER
LEOBARDO MORALES
No. 72023
Exp. 6-30-10
CIVIL
STATE OF CALIFORNIA

THE STATE OF CALIFORNIA OR ITS OFFICERS OR AGENTS SHALL NOT BE RESPONSIBLE FOR THE ACCURACY OR COMPLETENESS OF SCANNED COPIES OF THIS PLAN SHEET.

NOTES:

1. RUMBLE STRIP, AS SHOWN ON THIS PLAN SHALL NOT BE CONSTRUCTED ON BRIDGE DECKS, BRIDGE APPROACH SLABS, RAMPS, PUBLIC AND PRIVATE ROAD APPROACHES AND MINOR DRIVEWAYS. CONTACT DISTRICT 1 TRAFFIC SAFETY FOR FURTHER INFORMATION.
2. CENTER MEDIAN/INSIDE SHOULDER AREAS SHALL BE 5/8" DEPTH. APPLICATION TYPE AND LOCATION SHALL BE DETERMINED DURING DESIGN PHASE. CONTACT D-1 TRAFFIC SAFETY FOR FURTHER INFORMATION.
3. FOR 'GROUND-IN RUMBLE STRIP' APPLICATIONS NOT SHOWN SEE STANDARD PLANS 2006

ELEVATION

INSIDE SHOULDER AREA

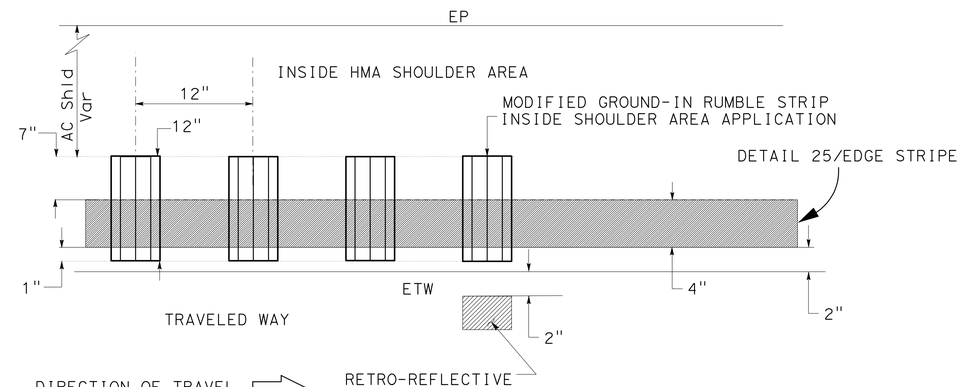

PLAN

MODIFIED GROUND-IN RUMBLE STRIP/INSIDE SHOULDER AREA

GROUND-IN RUMBLE STRIP TYPICALS

CONSTRUCTION DETAILS

NO SCALE

C-3

REVISED BY	DATE REVISED

CALCULATED-DESIGNED BY: L. MORALES
CHECKED BY: N. FORMOLI
FUNCTIONAL SUPERVISOR: NESAR FORMOLI

STATE OF CALIFORNIA - DEPARTMENT OF TRANSPORTATION
Caltrans
NORTH REGION
OFFICE OF DESIGN, SOUTH
DESIGN BRANCH S14

LAST REVISION 11-05-09 | DATE PLOTTED => 12-JAN-2010 | TIME PLOTTED => 13:25

Dist	COUNTY	ROUTE	POST MILES TOTAL PROJECT	SHEET No.	TOTAL SHEETS
01	Men	101	21.1/33.7	6	22

Leobardo Morales 11-5-09
REGISTERED CIVIL ENGINEER DATE

1-11-10
PLANS APPROVAL DATE

REGISTERED PROFESSIONAL ENGINEER
LEOBARDO MORALES
No. 72023
Exp. 6-30-10
CIVIL
STATE OF CALIFORNIA

THE STATE OF CALIFORNIA OR ITS OFFICERS OR AGENTS SHALL NOT BE RESPONSIBLE FOR THE ACCURACY OR COMPLETENESS OF SCANNED COPIES OF THIS PLAN SHEET.

STATIONARY MOUNTED CONSTRUCTION AREA SIGNS

SIGN No.	SIGN CODE CAMUTCD	PANEL SIZE	SIGN MESSAGE	No. OF POST AND SIZE	No. OF SIGNS
A	G20-1	60" x 36"	ROAD WORK NEXT 13 MILES	(2) 6" x 6"	2
B	G20-2	48" x 24"	END ROAD WORK	(1) 4" x 6"	2
C	C40(CA)	144" x 60"	TRAFFIC FINES DOUBLED IN CONSTRUCTION ZONES	(2) 6" x 8"	2
D	W20-1	30" x 30"	ROAD WORK AHEAD	(1) 4" x 4"	18
E	W3-5A	36" x 36"	REDUCED SPEED ZONE AHEAD	(1) 4" x 4"	2
F	R2-1	24" x 30"	SPEED LIMIT 55	(1) 4" x 4"	10

NOTES:
1. EXACT SIGN LOCATIONS TO BE FIELD DETERMINED AND APPROVED BY THE ENGINEER.
2. EXISTING 65 MPH SIGNS SHALL BE COVERED IN ACCORDANCE WITH REDUCED SPEED ZONE REQUIREMENT.

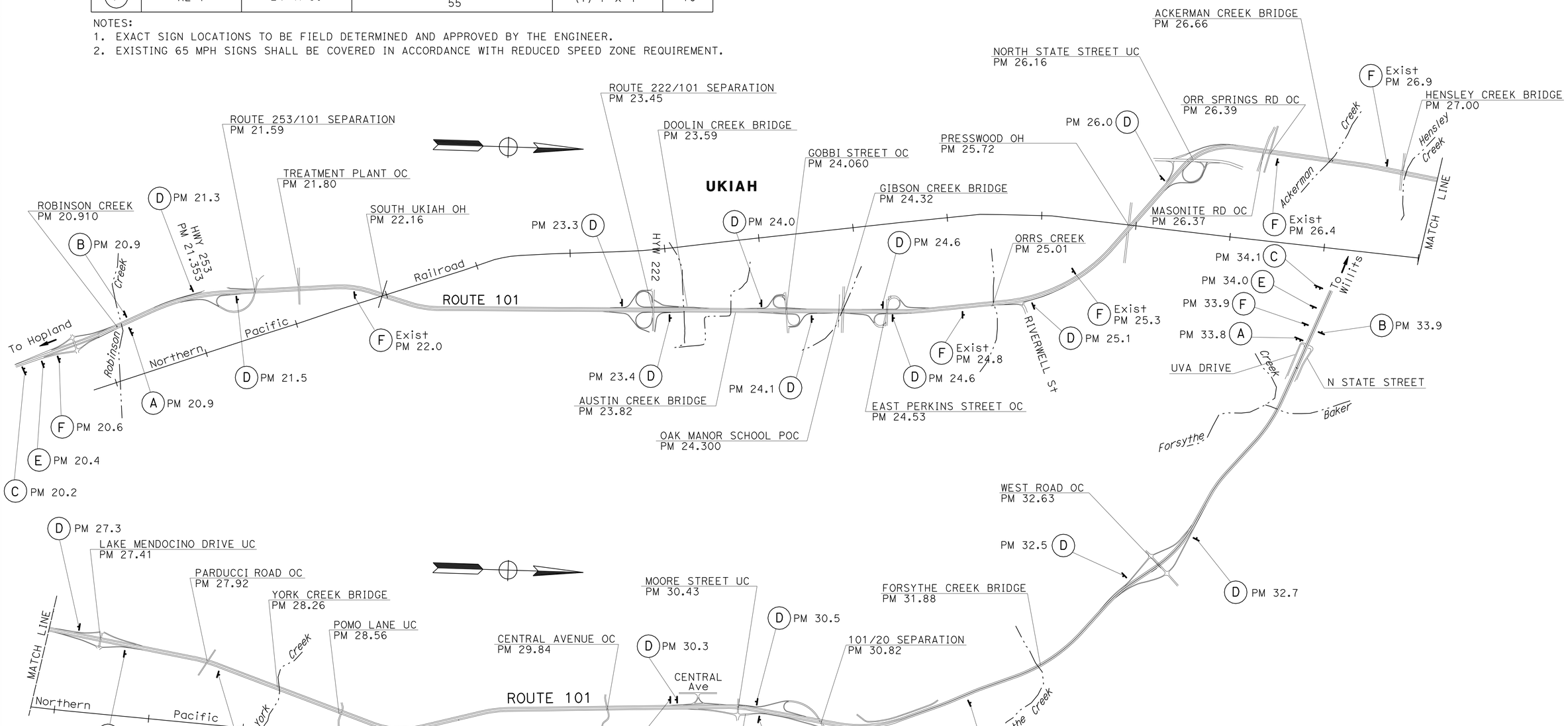

THIS PLAN ACCURATE FOR CONSTRUCTION AREA SIGN WORK ONLY.

CONSTRUCTION AREA SIGNS

NO SCALE

CS-1

REVISED BY	DATE REVISED

CALCULATED-DESIGNED BY	CHECKED BY
L. MORALES	N. FORMOLI

FUNCTIONAL SUPERVISOR: NESAR FORMOLI

STATE OF CALIFORNIA - DEPARTMENT OF TRANSPORTATION
Caltrans
NORTH REGION
OFFICE OF DESIGN, SOUTH
DESIGN BRANCH S14

LAST REVISION 11-05-09 | DATE PLOTTED => 12-JAN-2010 | TIME PLOTTED => 13:25

Dist	COUNTY	ROUTE	POST MILES TOTAL PROJECT	SHEET No.	TOTAL SHEETS
01	Men	101	21.1/33.7	7	22

REGISTERED CIVIL ENGINEER 11-5-09 DATE

1-11-10
PLANS APPROVAL DATE

REGISTERED PROFESSIONAL ENGINEER LEOBARDO MORALES No. 72023 Exp. 6-30-10 CIVIL STATE OF CALIFORNIA

THE STATE OF CALIFORNIA OR ITS OFFICERS OR AGENTS SHALL NOT BE RESPONSIBLE FOR THE ACCURACY OR COMPLETENESS OF SCANNED COPIES OF THIS PLAN SHEET.

NOTE:

1. THE 2′ INSIDE SHOULDER WILL BE REHABILITATED FIRST AS AN ORDER OF WORK TO ACCOMODATE TRAFFIC DURING CONSTRUCTION IN LANE # 2.

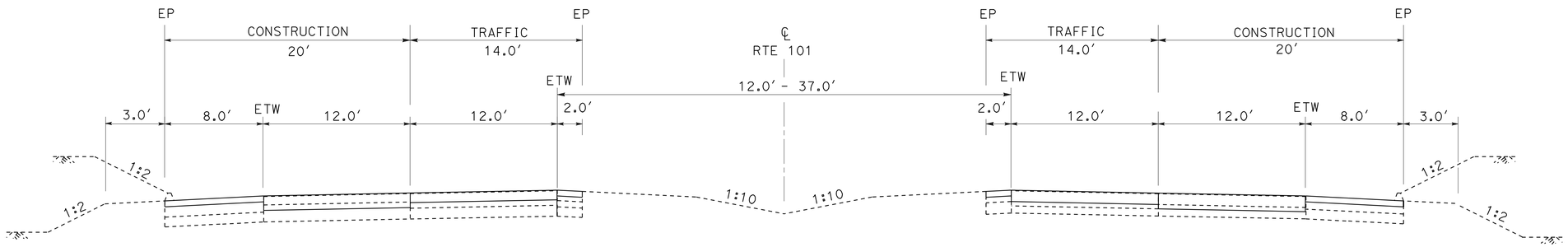

PM R21.1 - PM R33.7

ROUTE 101

STAGE 2

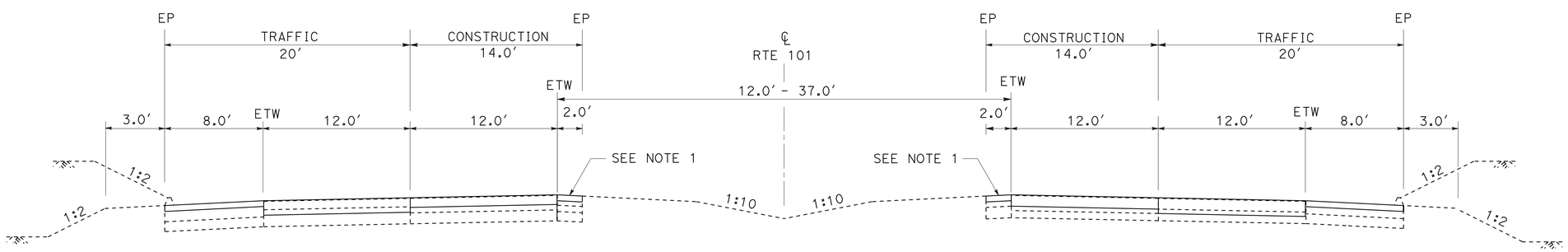

PM R21.1 - PM R33.7

ROUTE 101

STAGE 1

STAGE CONSTRUCTION

NO SCALE

SC-1

STATE OF CALIFORNIA - DEPARTMENT OF TRANSPORTATION
Caltrans
NORTH REGION
OFFICE OF DESIGN, SOUTH
DESIGN BRANCH S14

FUNCTIONAL SUPERVISOR: NESAR FORMOLI
CALCULATED-DESIGNED BY: L. MORALES
CHECKED BY: N. FORMOLI
REVISED BY
DATE REVISED

LAST REVISION 11-05-09 | DATE PLOTTED => 12-JAN-2010 | TIME PLOTTED => 13:25

Dist	COUNTY	ROUTE	POST MILES TOTAL PROJECT	SHEET No.	TOTAL SHEETS
01	Men	101	21.1/33.7	8	22

REGISTERED CIVIL ENGINEER — DATE 11-5-09

1-11-10
PLANS APPROVAL DATE

REGISTERED PROFESSIONAL ENGINEER — LEOBARDO MORALES No. 72023 Exp. 6-30-10 CIVIL — STATE OF CALIFORNIA

THE STATE OF CALIFORNIA OR ITS OFFICERS OR AGENTS SHALL NOT BE RESPONSIBLE FOR THE ACCURACY OR COMPLETENESS OF SCANNED COPIES OF THIS PLAN SHEET.

NOTES:

UNLESS OTHERWISE SPECIFIED IN THE SPECIAL PROVISIONS, ALL TEMPORARY WARNING SIGNS SHALL HAVE BLACK LEGEND ON ORANGE BACKGROUND.

CALIFORNIA CODE ARE DESIGNATED BY (CA). OTHERWISE, FEDERAL (MUTCD) CODES ARE SHOWN.

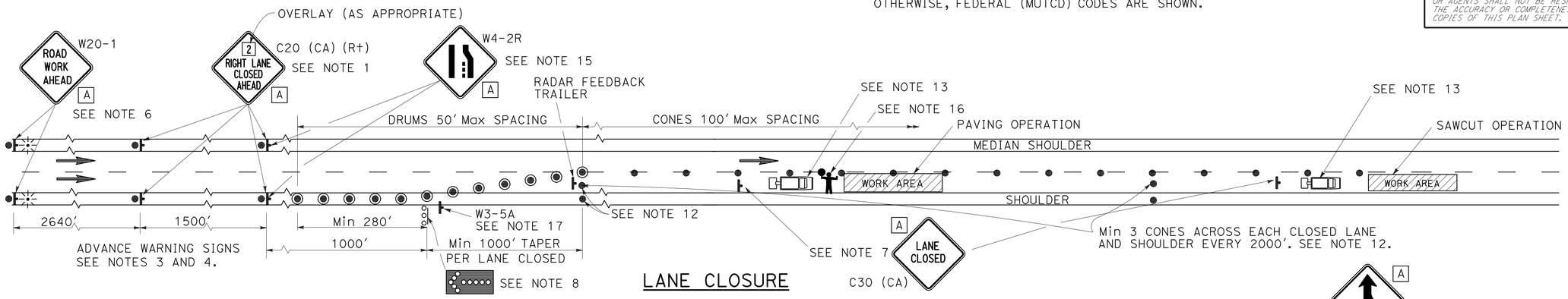

LANE CLOSURE

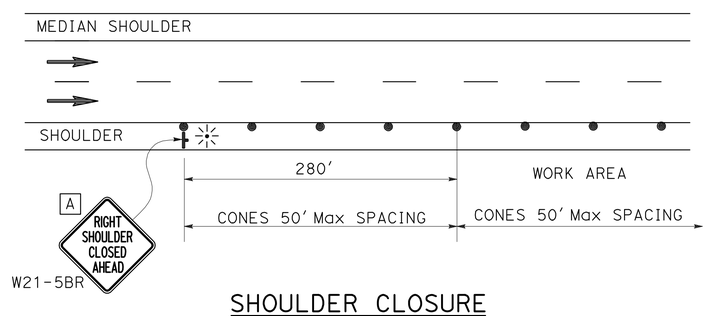

SHOULDER CLOSURE

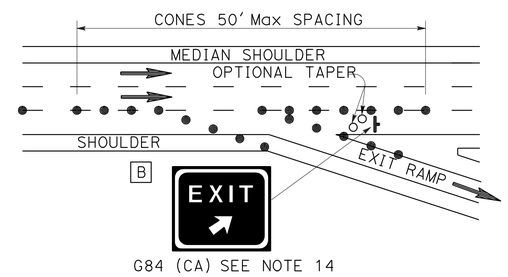

LANE CLOSURE AT EXIT RAMP

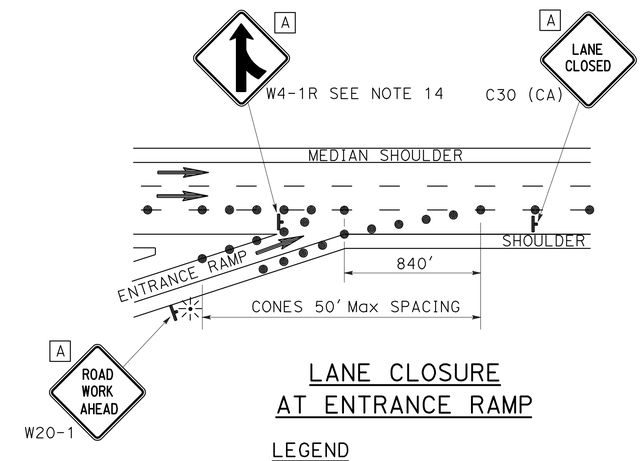

LANE CLOSURE AT ENTRANCE RAMP

NOTES:

1. MEDIAN LANE CLOSURES SHALL CONFORM TO THE DETAILS FOR OUTSIDE LANE CLOSURES EXCEPT THAT C20 (CA) (LT) SIGNS SHALL BE USED.
2. AT LEAST ONE PERSON SHALL BE ASSIGNED TO PROVIDE FULL TIME MAINTENANCE OF TRAFFIC CONTROL DEVICES FOR LANE CLOSURES.
3. DUPLICATE SIGN INSTALLATIONS ARE NOT REQUIRED:
   A) ON OPPOSITE SHOULDER IF AT LEAST ONE-HALF OF THE AVAILABLE LANES REMAIN OPEN TO TRAFFIC.
   B) IN THE MEDIAN IF THE WIDTH OF THE MEDIAN SHOULDER IS LESS THAN 8' AND THE OUTSIDE LANES ARE TO BE CLOSED.
4. EACH ADVANCE WARNING SIGN ON EACH SIDE OF THE ROADWAY SHALL BE EQUIPPED WITH AT LEAST TWO FLAGS FOR DAYTIME CLOSURE. EACH FLAG SHALL BE AT LEAST 16" X 16" IN SIZE AND SHALL BE ORANGE OR FLUORESCENT RED-ORANGE IN COLOR. FLASHING BEACONS SHALL BE PLACED AT THE LOCATIONS INDICATED FOR LANE CLOSURE DURING HOURS OF DARKNESS.
5. A C14 (CA) "END ROAD WORK" SIGN, AS APPROPRIATE, SHALL BE PLACED AT THE END OF THE LANE CLOSURE UNLESS THE END OF WORK AREA IS OBVIOUS OR ENDS WITHIN A LARGER PROJECT'S LIMITS.
6. IF THE W20-1 SIGN WOULD FOLLOW WITHIN 2000' OF A STATIONARY W20-1 OR C11 (CA) "ROAD WORK NEXT _____ MILES", USE A C20 (CA) SIGN FOR THE FIRST ADVANCE WARNING SIGN.
7. PLACE A C30 (CA) SIGN EVERY 2000' THROUGHOUT LENGTH OF LANE CLOSURE.
8. ONE FLASHING ARROW SIGN FOR EACH LANE CLOSED. THE FIRST FLASHING ARROW SIGN SHALL BE TYPE I. ALL OTHERS MAY BE EITHER TYPE I OR TYPE II.
9. A MINIMUM 1500' OF SIGHT DISTANCE SHALL BE PROVIDED WHERE POSSIBLE FOR VEHICLES APPROACHING THE FIRST FLASHING ARROW SIGN. LANE CLOSURES SHALL NOT BEGIN AT TOP OF CREST VERTICAL CURVE OR ON A HORIZONTAL CURVE.
10. ALL CONES USED FOR LANE CLOSURES DURING THE HOURS OF DARKNESS SHALL BE FITTED WITH RETROREFLECTIVE BANDS (OR SLEEVES) AS SPECIFIED IN THE SPECIFICATIONS.
11. PORTABLE DELINEATORS, PLACED AT ONE-HALF THE SPACING INDICATED FOR TRAFFIC CONES MAY BE USED INSTEAD OF CONES FOR DAYTIME CLOSURES ONLY.
12. UNLESS OTHERWISE SPECIFIED IN THE SPECIAL PROVISIONS, A MINIMUM OF 3 CONES SHALL BE PLACED TRANSVERSELY ACROSS EACH CLOSED LANE AND SHOULDER AT EACH LOCATION WHERE A TAPER ACROSS A TRAFFIC LANE ENDS AND EVERY 2000' AS SHOWN ON THE "LANE CLOSURE" DETAIL. TWO TYPE II BARRICADES MAY BE USED INSTEAD OF THE 3 CONES. THE TRANSVERSE ALIGNMENT OF THE CONES OR BARRICADES ON THE CLOSED SHOULDER MAY BE SHIFTED FROM THE TRANSVERSE ALIGNMENT TO PROVIDE ACCESS TO THE WORK.
13. TRUCK MOUNTED ATTENUATOR SHALL BE PLACED PRIOR TO EACH CONSTRUCTION OPERATION.
14. UNLESS OTHERWISE SPECIFIED IN THE SPECIAL PROVISIONS, THE G84 (CA) AND W4-1 SIGNS SHALL BE USED AS SHOWN.
15. WHEN SPECIFIED IN THE SPECIAL PROVISIONS, A W4-2 "LANE ENDS" SYMBOL SIGN IS TO BE USED IN PLACE OF THE C20 (CA) "RIGHT LANE CLOSED AHEAD" SIGN.
16. SLOW FLAGGER REQUIRED. FLAGGER SHOULD STAND IN A CONSPICUOUS PLACE, BE VISIBLE TO APPROACHING TRAFFIC AS WELL AS APPROACHING VEHICLES. DURING THE HOURS OF DARKNESS, THE FLAGGING-STATION AND FLAGGER SHALL BE ILLUMINATED AND CLEARLY VISIBLE TO APPROACHING TRAFFIC. THE ILLUMINATION FOOTPRINT OF THE LIGHTING ON THE GROUND SHALL BE AT LEAST 20' IN DIAMETER.
17. SIGN SHALL BE PLACED 750' IN ADVANCE OF RADAR FEEDBACK TRAILER.

LEGEND

- PLASTIC DRUM
- TRAFFIC CONE
- TRAFFIC CONE (OPTIONAL TAPER)
- TEMPORARY SIGN
- FLASHING ARROW SIGN (FAS)
- FAS SUPPORT OR TRAILER
- DIRECTION OF TRAVEL
- PORTABLE FLASHING BEACON
- SLOW FLAGGER

SIGN PANEL SIZE (Min)

A 48" x 48"
B 54" x 48"

MODIFIED T10
STAGE CONSTRUCTION DETAILS

NO SCALE

SCD-1

STATE OF CALIFORNIA - DEPARTMENT OF TRANSPORTATION
Caltrans®
NORTH REGION
OFFICE OF DESIGN, SOUTH
DESIGN BRANCH S14

FUNCTIONAL SUPERVISOR: NESAR FORMOLI
CALCULATED-DESIGNED BY: L. MORALES
CHECKED BY: N. FORMOLI
REVISED BY
DATE REVISED

LAST REVISION 11-05-09
DATE PLOTTED => 12-JAN-2010
TIME PLOTTED => 13:25

Dist	COUNTY	ROUTE	POST MILES TOTAL PROJECT	SHEET No.	TOTAL SHEETS
01	Men	101	21.1/33.7	9	22

REGISTERED CIVIL ENGINEER 11-5-09 DATE

1-11-10
PLANS APPROVAL DATE

REGISTERED PROFESSIONAL ENGINEER LEOBARDO MORALES No. 72023 Exp. 6-30-10 CIVIL STATE OF CALIFORNIA

THE STATE OF CALIFORNIA OR ITS OFFICERS OR AGENTS SHALL NOT BE RESPONSIBLE FOR THE ACCURACY OR COMPLETENESS OF SCANNED COPIES OF THIS PLAN SHEET.

NOTES:

① PRE-NOTIFICATION PCMS: PLACE NEAR RAMP AND ACTIVATE APPROXIMATELY 12 HOURS PRIOR TO RAMP CLOSURE.

EXIT WILL BE CLOSED	TODAY (OR TONIGHT) XX:XX PM-XX:XX AM
FRAME 1	FRAME 2

② RAMP CLOSED PCMS: MOVE PRE-NOTIFICATION PCMS APPROXIMATELY 1000 FEET BEFORE RAMP AND ACTIVATE DURING RAMP CLOSURE.

EXIT XXX CLOSED	FOLLOW DETOUR
FRAME 1	FRAME 2

③ PLACE 7 DAYS PRIOR TO RAMP CLOSURE.

④ EXIT NUMBER SHOWN ON SIGN SHALL BE AS FOLLOWS:

EXIT NAME	EXIT NUMBER
COX-SCHRADER RD	545
HIGHWAY 253 WEST/BOONVILLE	546
HIGHWAY 222/TALMAGE	548A
GOBBI STREET	548B
PERKINS ST/CENTRAL UKIAH	549
NORTH STATE STREET	551
LAKE MENDOCINO DR	552
CALPELLA	555A
SR-20 EAST/UPPER LAKE/WILLIAMS	555B
WEST ROAD/REDWOOD VALLEY	557

FOR DETAILS NOT SHOWN SEE Std PLAN A73C

LEGEND

PCMS - PORTABLE CHANGEABLE MESSAGE SIGN
EXACT LOCATION TO BE DETERMINED BY RESIDENT ENGINEER.

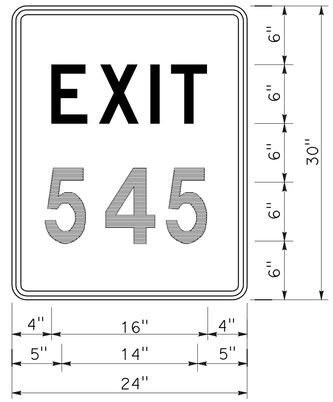

EXIT NUMBER SIGN (SP1) DETAIL

CONSTRUCTION AREA SIGNS (PORTABLE)

CODE	PANEL SIZE	SIGN MESSAGE
G26-1(CA)	27" x 18"	101
M3-1	24" x 18"	NORTH OR SOUTH *
M4-8A	30" x 18"	END DETOUR
M4-10 (Lt)	35" x 12"	DETOUR (Lt ARROW)
M4-10 (Rt)	35" x 12"	DETOUR (Rt ARROW)
SC3 (CA)	35" x 12"	DETOUR WITH UP ARROW
SC6-4 (CA)	47" x 60"	RAMP CLOSED - DATE TIME
SP1	18" x 18"	EXIT NUMBER (SEE NOTE 4)

* NORTH OR SOUTH DEPENDS ON DIRECTION OF RAMP CLOSURE

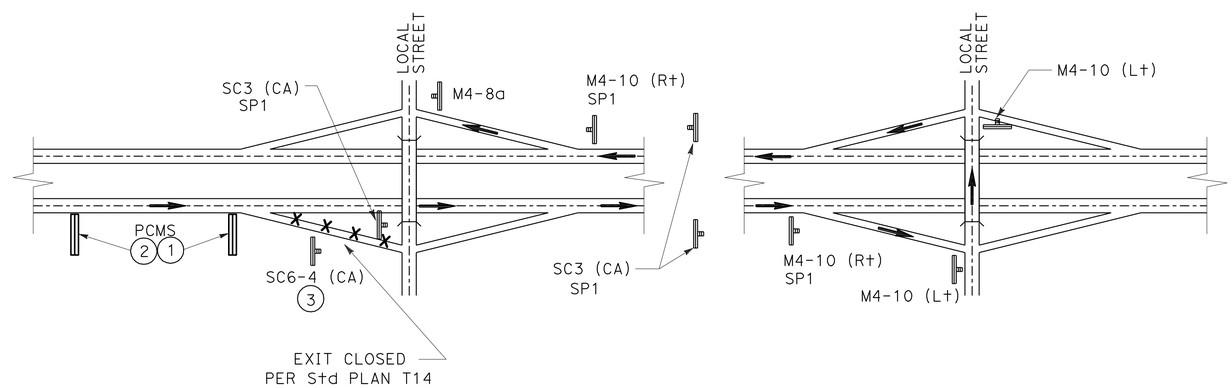

TYPICAL FREEWAY EXIT RAMP DETOUR SIGNING

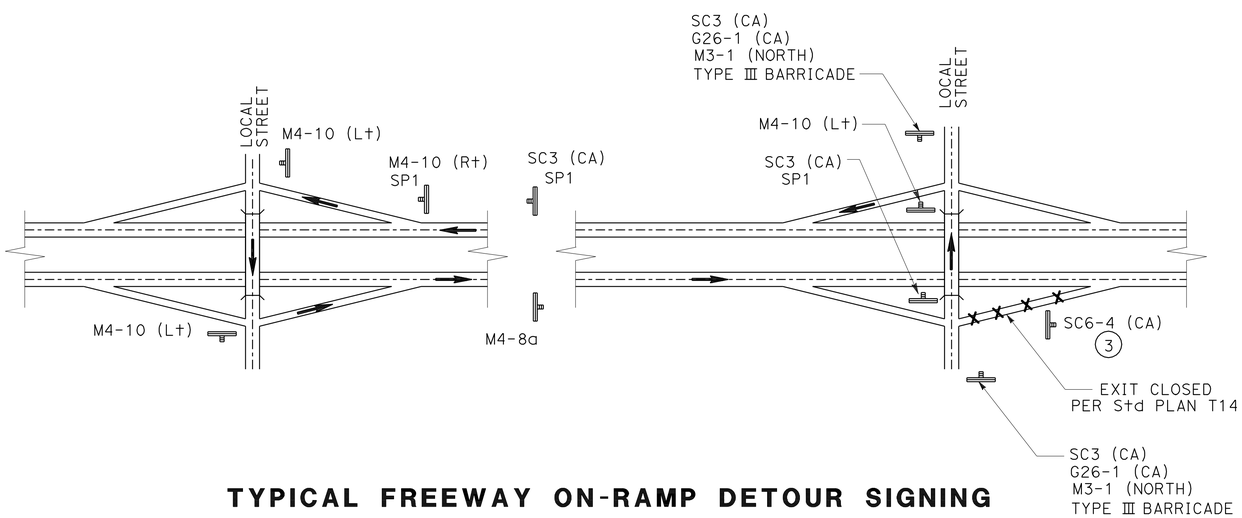

TYPICAL FREEWAY ON-RAMP DETOUR SIGNING

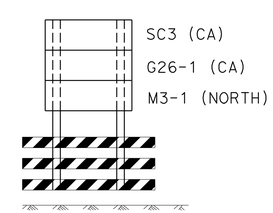

TYPE III BARRICADE

DETOUR PLAN

NO SCALE

DE-1

STATE OF CALIFORNIA - DEPARTMENT OF TRANSPORTATION
Caltrans
NORTH REGION
OFFICE OF DESIGN, SOUTH
DESIGN BRANCH S14

FUNCTIONAL SUPERVISOR: NESAR FORMOLI
CALCULATED-DESIGNED BY: L. MORALES
CHECKED BY: N. FORMOLI
REVISED BY
DATE REVISED

LAST REVISION 11-05-09 | DATE PLOTTED => 12-JAN-2010 | TIME PLOTTED => 13:25

Dist	COUNTY	ROUTE	POST MILES TOTAL PROJECT	SHEET No.	TOTAL SHEETS
01	Men	101	21.1/33.7	10	22

Leobardo Morales 11-5-09
REGISTERED CIVIL ENGINEER DATE

1-11-10
PLANS APPROVAL DATE

REGISTERED PROFESSIONAL ENGINEER
LEOBARDO MORALES
No. 72023
Exp. 6-30-10
CIVIL
STATE OF CALIFORNIA

THE STATE OF CALIFORNIA OR ITS OFFICERS OR AGENTS SHALL NOT BE RESPONSIBLE FOR THE ACCURACY OR COMPLETENESS OF SCANNED COPIES OF THIS PLAN SHEET.

NOTE:

1. FOR LABELS (1), (2), AND (3), SEE SHEET DE-1.

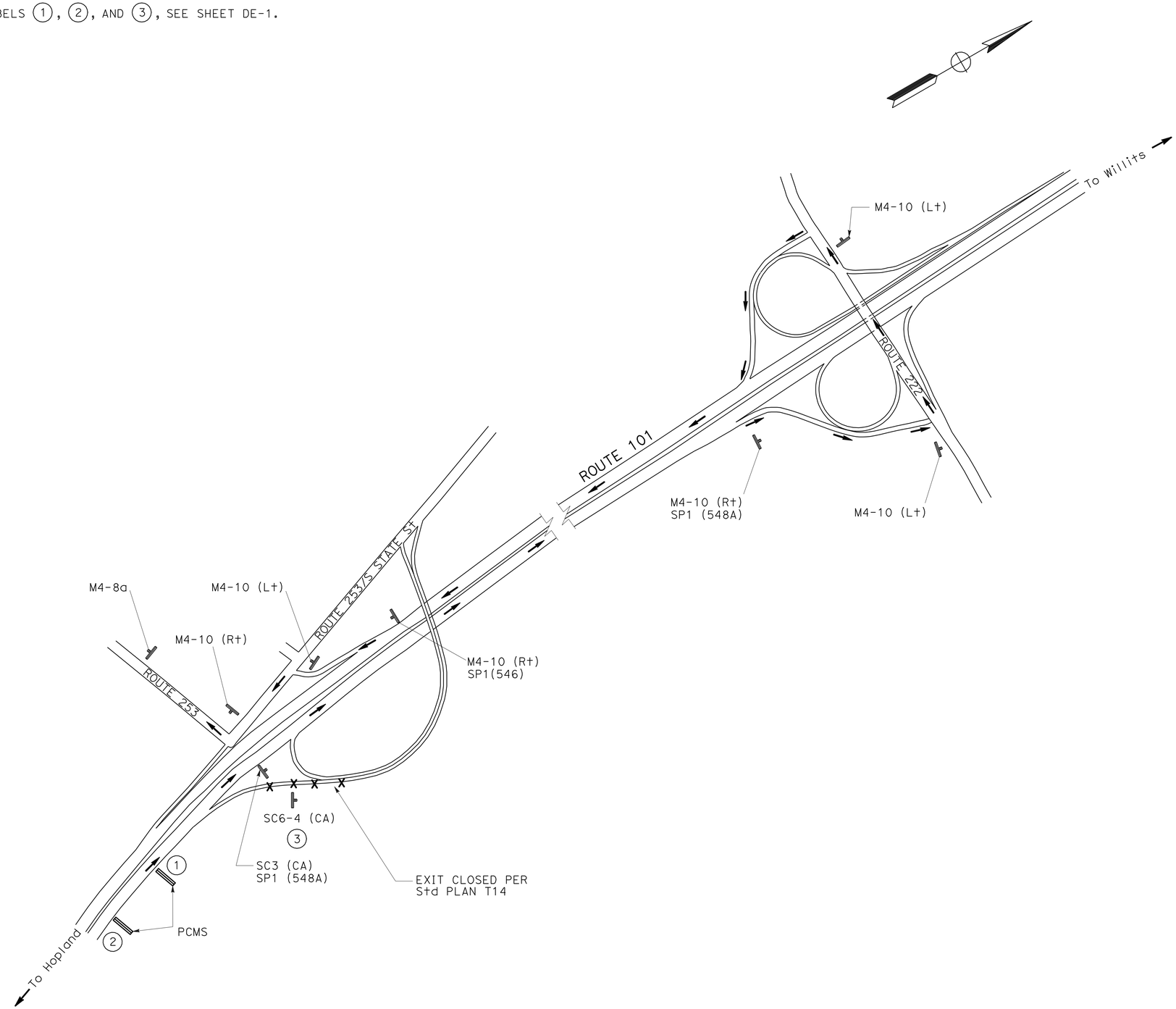

HIGHWAY 253 NORTHBOUND EXIT RAMP DETOUR

DETOUR PLAN

NO SCALE

DE-2

STATE OF CALIFORNIA - DEPARTMENT OF TRANSPORTATION
Caltrans
NORTH REGION
OFFICE OF DESIGN, SOUTH
DESIGN BRANCH S14

FUNCTIONAL SUPERVISOR: NESAR FORMOLI
CALCULATED-DESIGNED BY: L. MORALES
CHECKED BY: N. FORMOLI
REVISED BY
DATE REVISED

LAST REVISION 11-05-09 | DATE PLOTTED => 12-JAN-2010 | TIME PLOTTED => 13:25

Dist	COUNTY	ROUTE	POST MILES TOTAL PROJECT	SHEET No.	TOTAL SHEETS
01	Men	101	21.1/33.7	11	22

Leobardo Morales 11-5-09
REGISTERED CIVIL ENGINEER DATE

1-11-10
PLANS APPROVAL DATE

REGISTERED PROFESSIONAL ENGINEER
LEOBARDO MORALES
No. 72023
Exp. 6-30-10
CIVIL
STATE OF CALIFORNIA

THE STATE OF CALIFORNIA OR ITS OFFICERS OR AGENTS SHALL NOT BE RESPONSIBLE FOR THE ACCURACY OR COMPLETENESS OF SCANNED COPIES OF THIS PLAN SHEET.

NOTE:

1. FOR LABELS (1), (2), AND (3), SEE SHEET DE-1.

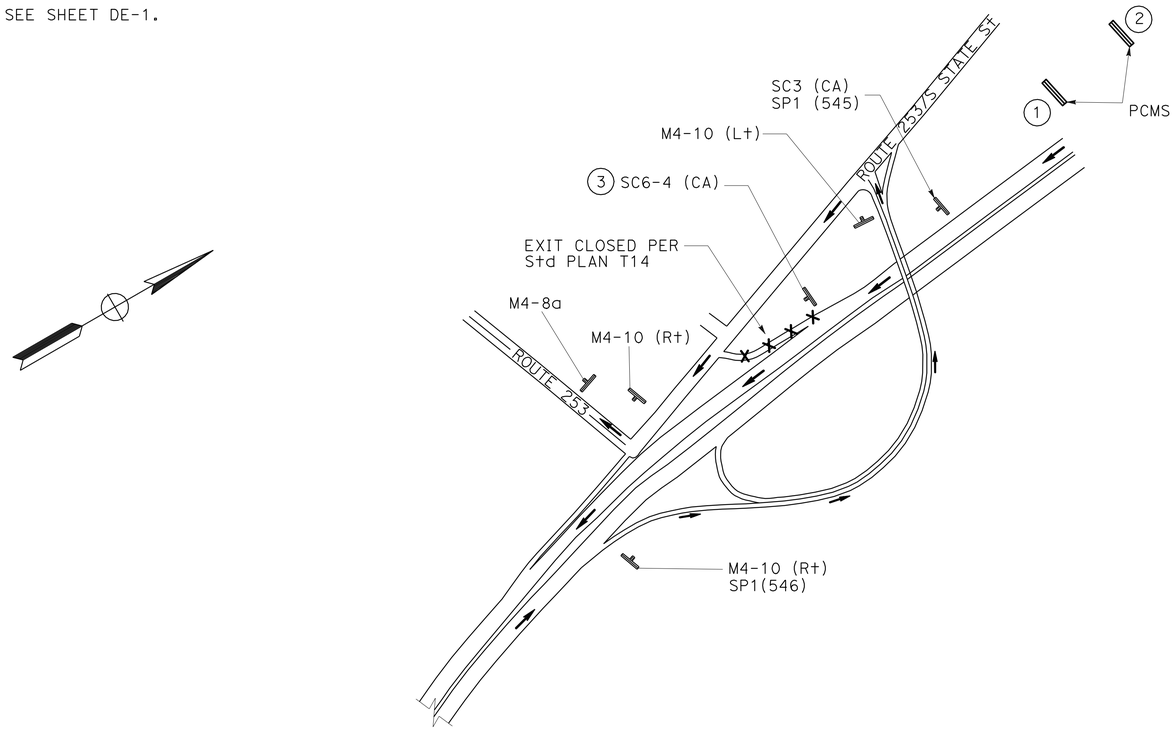

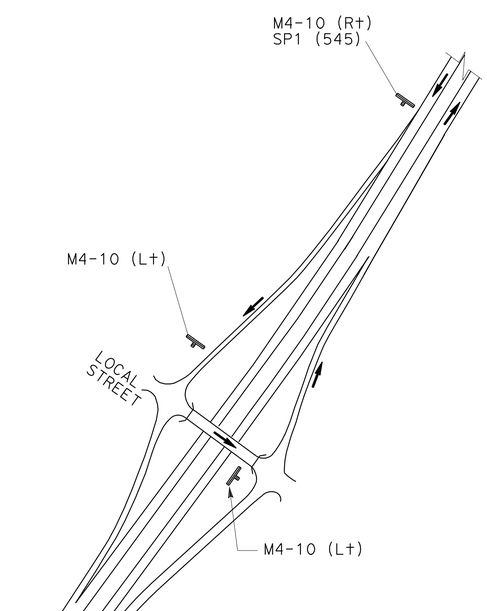

HIGHWAY 253 SOUTHBOUND EXIT RAMP DETOUR

DETOUR PLAN

NO SCALE

DE-3

STATE OF CALIFORNIA - DEPARTMENT OF TRANSPORTATION
Caltrans
NORTH REGION
OFFICE OF DESIGN, SOUTH
DESIGN BRANCH S14

FUNCTIONAL SUPERVISOR: NESAR FORMOLI
CALCULATED-DESIGNED BY: L. MORALES
CHECKED BY: N. FORMOLI
REVISED BY
DATE REVISED

LAST REVISION 11-05-09
DATE PLOTTED => 12-JAN-2010
TIME PLOTTED => 13:26

Dist	COUNTY	ROUTE	POST MILES TOTAL PROJECT	SHEET No.	TOTAL SHEETS
01	Men	101	21.1/33.7	12	22

Leobardo Morales 11-5-09
REGISTERED CIVIL ENGINEER DATE

1-11-10
PLANS APPROVAL DATE

REGISTERED PROFESSIONAL ENGINEER
LEOBARDO MORALES
No. 72023
Exp. 6-30-10
CIVIL
STATE OF CALIFORNIA

THE STATE OF CALIFORNIA OR ITS OFFICERS OR AGENTS SHALL NOT BE RESPONSIBLE FOR THE ACCURACY OR COMPLETENESS OF SCANNED COPIES OF THIS PLAN SHEET.

NOTE:

1. FOR LABELS (1), (2), AND (3), SEE SHEET DE-1.

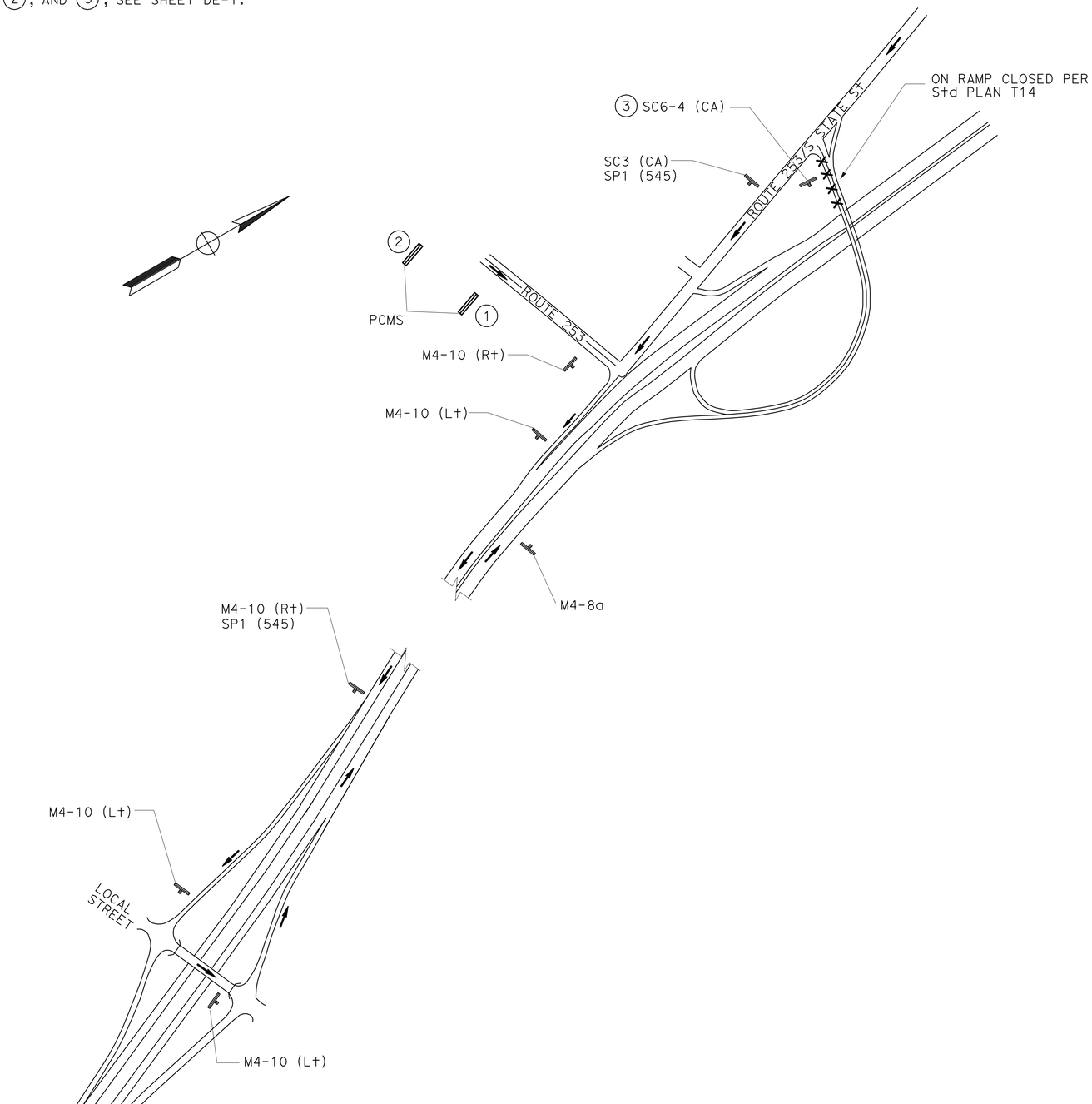

HIGHWAY 253/101 NORTHBOUND ON-RAMP DETOUR

DETOUR PLAN

NO SCALE

DE-4

STATE OF CALIFORNIA - DEPARTMENT OF TRANSPORTATION
Caltrans
NORTH REGION
OFFICE OF DESIGN, SOUTH
DESIGN BRANCH S14

FUNCTIONAL SUPERVISOR: NESAR FORMOLI

CALCULATED-DESIGNED BY: L. MORALES
CHECKED BY: N. FORMOLI

REVISED BY
DATE REVISED

LAST REVISION 11-05-09
DATE PLOTTED => 12-JAN-2010
TIME PLOTTED => 13:26

Dist	COUNTY	ROUTE	POST MILES TOTAL PROJECT	SHEET No.	TOTAL SHEETS
01	Men	101	21.1/33.7	13	22

Leobardo Morales 11-5-09
REGISTERED CIVIL ENGINEER DATE

1-11-10
PLANS APPROVAL DATE

REGISTERED PROFESSIONAL ENGINEER
LEOBARDO MORALES
No. 72023
Exp. 6-30-10
CIVIL
STATE OF CALIFORNIA

THE STATE OF CALIFORNIA OR ITS OFFICERS OR AGENTS SHALL NOT BE RESPONSIBLE FOR THE ACCURACY OR COMPLETENESS OF SCANNED COPIES OF THIS PLAN SHEET.

NOTE:

1. FOR LABELS (1), (2), AND (3), SEE SHEET DE-1.

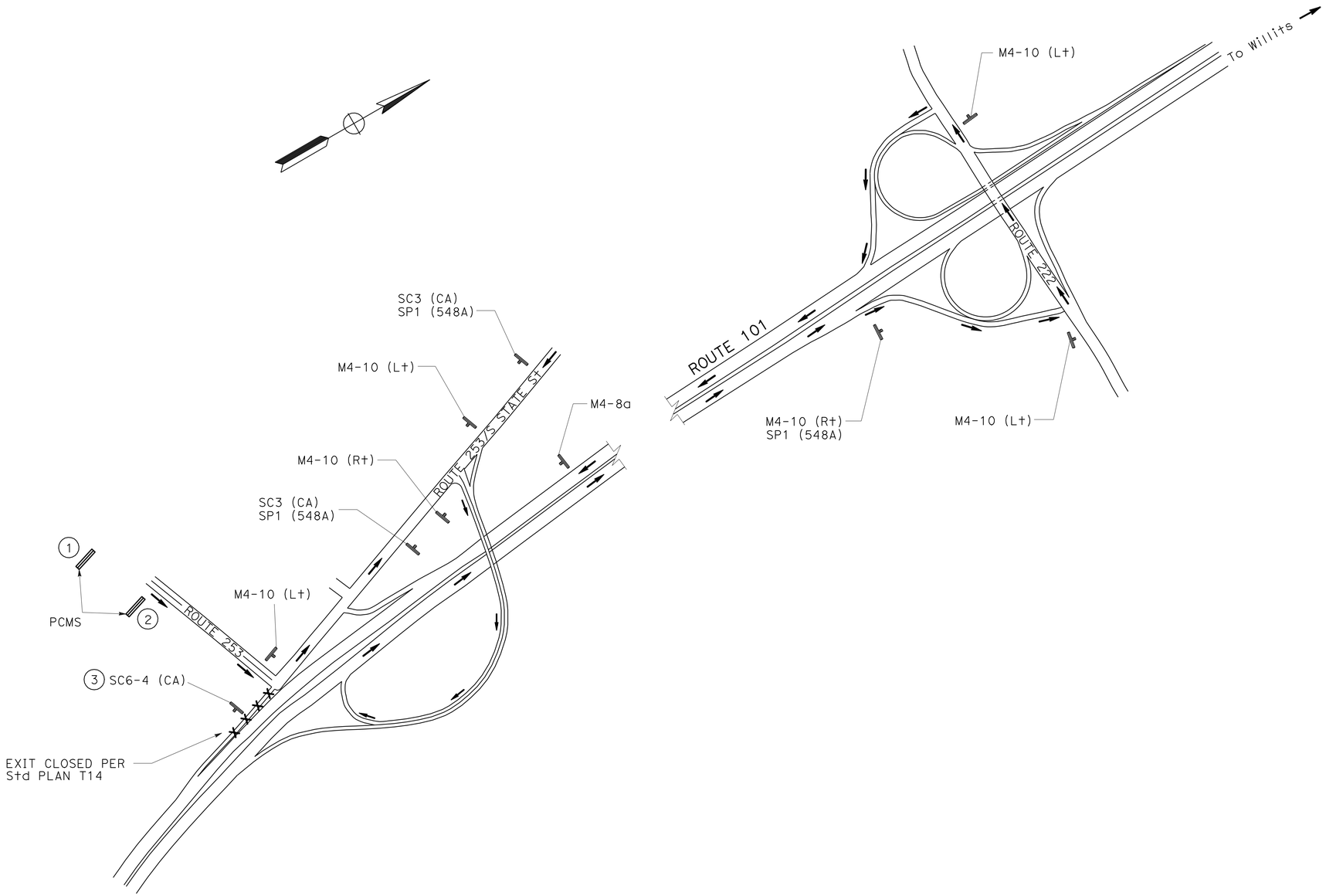

HIGHWAY 253/101 SOUTHBOUND ON-RAMP DETOUR

DETOUR PLAN

NO SCALE

DE-5

STATE OF CALIFORNIA - DEPARTMENT OF TRANSPORTATION
Caltrans
NORTH REGION
OFFICE OF DESIGN, SOUTH
DESIGN BRANCH S14

FUNCTIONAL SUPERVISOR: NESAR FORMOLI
CALCULATED-DESIGNED BY: L. MORALES
CHECKED BY: N. FORMOLI
REVISED BY
DATE REVISED

LAST REVISION 11-05-09
DATE PLOTTED => 12-JAN-2010
TIME PLOTTED => 13:26

Dist	COUNTY	ROUTE	POST MILES TOTAL PROJECT	SHEET No.	TOTAL SHEETS
01	Men	101	21.1/33.7	14	22

REGISTERED CIVIL ENGINEER 11-5-09 DATE

1-11-10
PLANS APPROVAL DATE

REGISTERED PROFESSIONAL ENGINEER LEOBARDO MORALES No. 72023 Exp. 6-30-10 CIVIL STATE OF CALIFORNIA

THE STATE OF CALIFORNIA OR ITS OFFICERS OR AGENTS SHALL NOT BE RESPONSIBLE FOR THE ACCURACY OR COMPLETENESS OF SCANNED COPIES OF THIS PLAN SHEET.

NOTE:

1. FOR LABELS (1), (2), AND (3), SEE SHEET DE-1.

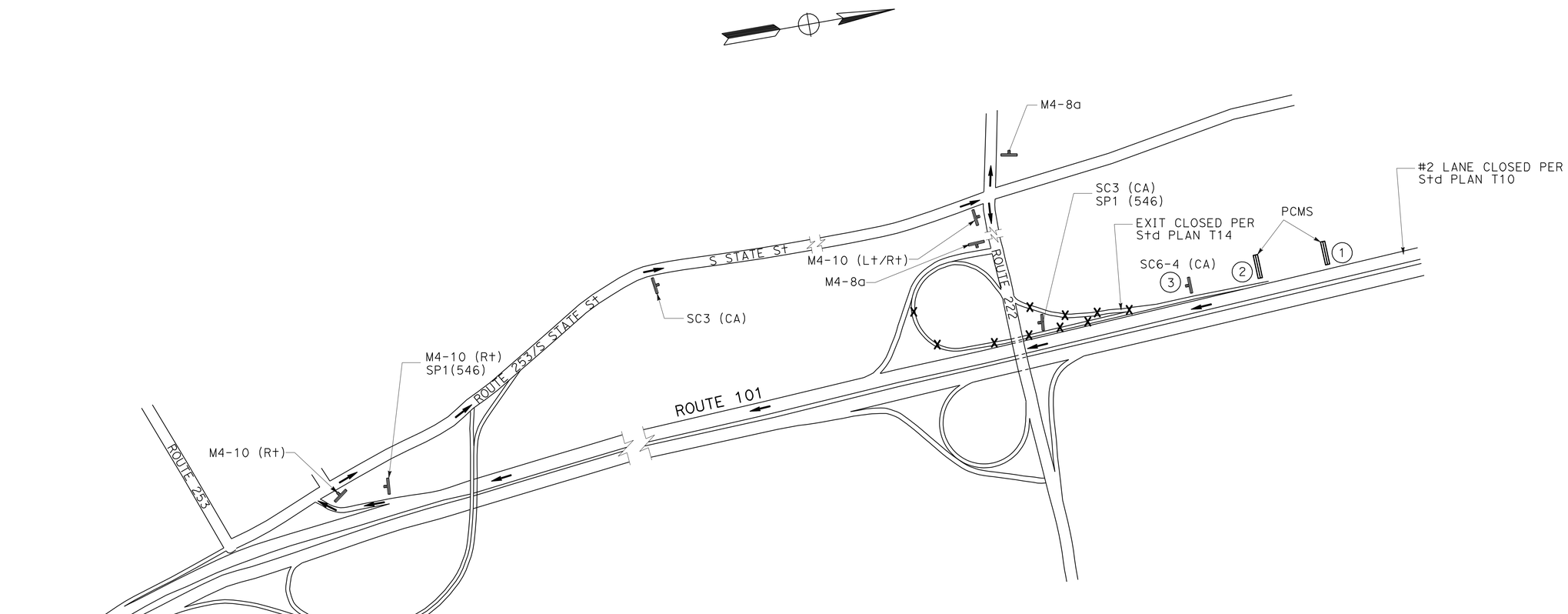

HIGHWAY 222 SOUTHBOUND EXIT RAMP DETOUR

DETOUR PLAN

NO SCALE

DE-6

STATE OF CALIFORNIA - DEPARTMENT OF TRANSPORTATION
Caltrans
NORTH REGION
OFFICE OF DESIGN, SOUTH
DESIGN BRANCH S14

FUNCTIONAL SUPERVISOR: NESAR FORMOLI

CALCULATED-DESIGNED BY: L. MORALES
CHECKED BY: N. FORMOLI

REVISED BY
DATE REVISED

LAST REVISION 11-05-09
DATE PLOTTED => 12-JAN-2010
TIME PLOTTED => 13:26

Dist	COUNTY	ROUTE	POST MILES TOTAL PROJECT	SHEET No.	TOTAL SHEETS
01	Men	101	21.1/33.7	15	22

REGISTERED CIVIL ENGINEER 11-5-09 DATE

1-11-10
PLANS APPROVAL DATE

REGISTERED PROFESSIONAL ENGINEER LEOBARDO MORALES No. 72023 Exp. 6-30-10 CIVIL STATE OF CALIFORNIA

THE STATE OF CALIFORNIA OR ITS OFFICERS OR AGENTS SHALL NOT BE RESPONSIBLE FOR THE ACCURACY OR COMPLETENESS OF SCANNED COPIES OF THIS PLAN SHEET.

NOTES:

1. THIS PLAN WILL PROVIDE THE NECESSARY SIGNS REQUIRED FOR PASSAGE THROUGH THE WORK ZONE DURING CONSTRUCTION HOURS.
2. THE EXACT LOCATION OF THE SIGNS CAN BE DETERMINED BY THE RESIDENT ENGINEER BASED ON LOCATION OF CONSTRUCTION ZONE.
3. THE BICYCLE DETOUR SIGNS M4-9C SHALL BE USED TO GUIDE BICYCLISTS THROUGH LOCAL STREETS AND FRONTAGE ROADS.

ADDITIONAL CONSTRUCTION AREA SIGNS (PORTABLE)

SIGN No.	SIGN CODE CAMUTCD	PANEL SIZE	SIGN MESSAGE	No. OF SIGNS
G	M4-9c	30" x 24"	BICYCLE DETOUR (WITH ARROW)	25
H	W21-5b	36" x 36"	RIGHT SHOULDER CLOSED AHEAD	8
I	C23B(CA) MODIFIED	30" x 24"	BICYCLES USE (STREET NAME PLATE INSERT)	8

EXACT SIGN LOCATIONS TO BE FIELD DETERMINED AND APPROVED BY THE ENGINEER.

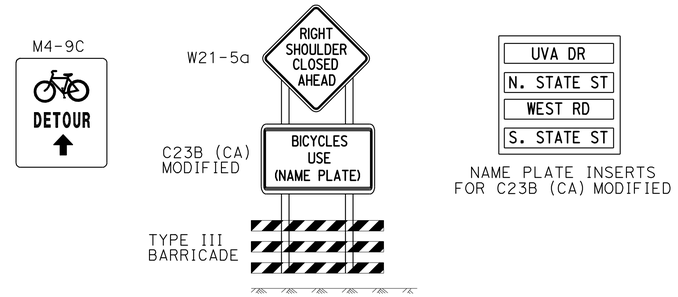

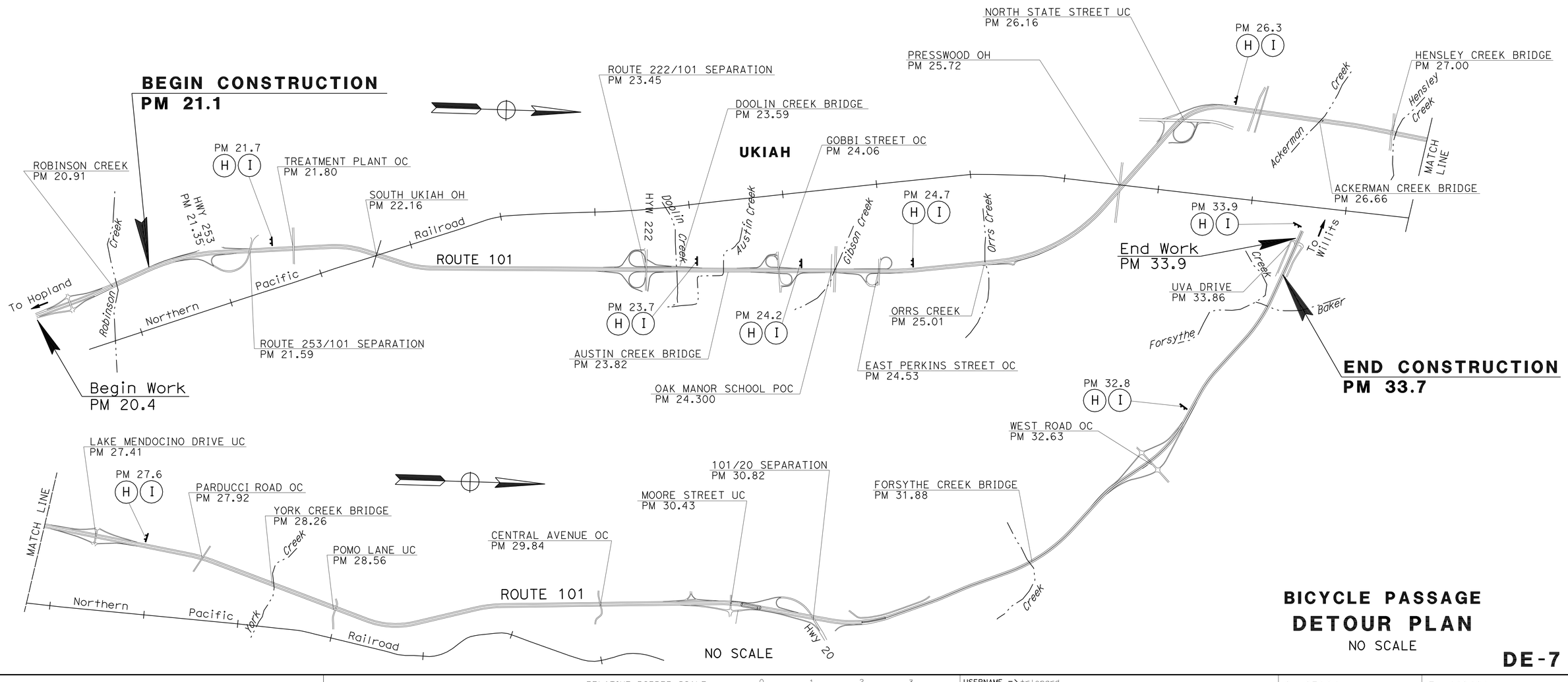

BICYCLE PASSAGE DETOUR PLAN

NO SCALE

DE-7

STATE OF CALIFORNIA - DEPARTMENT OF TRANSPORTATION
NORTH REGION
OFFICE OF DESIGN, SOUTH
DESIGN BRANCH S14

FUNCTIONAL SUPERVISOR: NESAR FORMOLI
CALCULATED-DESIGNED BY: L. MORALES
CHECKED BY: N. FORMOLI
REVISED BY
DATE REVISED

LAST REVISION 11-05-09 | DATE PLOTTED => 12-JAN-2010 | TIME PLOTTED => 13:26

Dist	COUNTY	ROUTE	POST MILES TOTAL PROJECT	SHEET No.	TOTAL SHEETS
01	Men	101	21.1/33.7	16	22

REGISTERED CIVIL ENGINEER 11-5-09 DATE

1-11-10
PLANS APPROVAL DATE

REGISTERED PROFESSIONAL ENGINEER LEOBARDO MORALES No. 72023 Exp. 6-30-10 CIVIL STATE OF CALIFORNIA

THE STATE OF CALIFORNIA OR ITS OFFICERS OR AGENTS SHALL NOT BE RESPONSIBLE FOR THE ACCURACY OR COMPLETENESS OF SCANNED COPIES OF THIS PLAN SHEET.

LEGEND:

No. PAVEMENT DELINEATION DETAIL No.

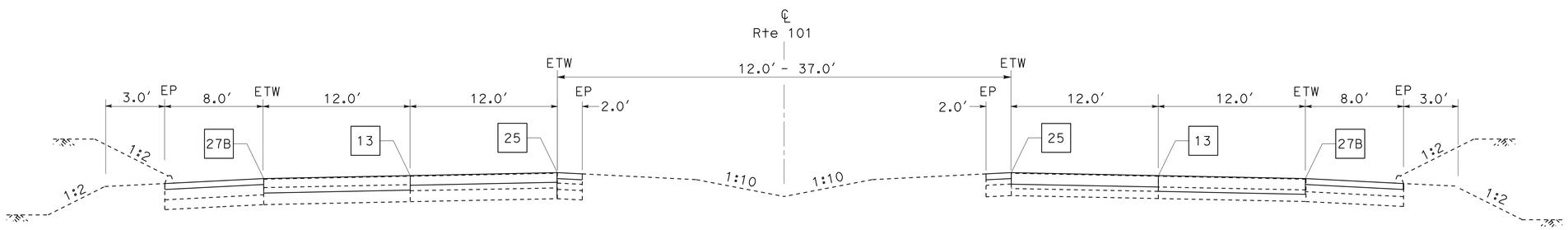

PM R21.1 - PM R33.7
ROUTE 101

PAVEMENT DELINEATION QUANTITIES

LOCATION	4" TRAFFIC STRIPE			PAVEMENT MARKER		
	PAINT (1-COAT)	THERMOPLASTIC		NON-REFLECTIVE	ONE-WAY RETROREFLECTIVE	
	DETAIL 13	DETAIL 25	DETAIL 27B	TYPE A	TYPE G	TYPE H
	LF	LF	LF	EA	EA	EA
PM 21.1 TO PM 33.7	133,056	133,056	119,616	11,088	2,773	2,773
TOTAL	133,056	252,672		11,088	5,546	

NOTE: FOR DETAILS NOT SHOWN SEE Std Plan A20A OR A20B.

PAVEMENT DELINEATION TYPICAL AND QUANTITIES

NO SCALE

PD-1

STATE OF CALIFORNIA - DEPARTMENT OF TRANSPORTATION
Caltrans
NORTH REGION
OFFICE OF DESIGN, SOUTH
DESIGN BRANCH S14

FUNCTIONAL SUPERVISOR: NESAR FORMOLI
CALCULATED-DESIGNED BY: L. MORALES
CHECKED BY: N. FORMOLI
REVISED BY
DATE REVISED

LAST REVISION 11-05-09
DATE PLOTTED => 12-JAN-2010
TIME PLOTTED => 13:30

Dist	COUNTY	ROUTE	POST MILES TOTAL PROJECT	SHEET No.	TOTAL SHEETS
01	Men	101	21.1/33.7	17	22

Leobardo Morales 11-5-09
REGISTERED CIVIL ENGINEER DATE

1-11-10
PLANS APPROVAL DATE

REGISTERED PROFESSIONAL ENGINEER LEOBARDO MORALES No. 72023 Exp. 6-30-10 CIVIL STATE OF CALIFORNIA

THE STATE OF CALIFORNIA OR ITS OFFICERS OR AGENTS SHALL NOT BE RESPONSIBLE FOR THE ACCURACY OR COMPLETENESS OF SCANNED COPIES OF THIS PLAN SHEET.

ABBREVIATIONS:

CNS = CRACKED SLAB, WITH NO SETTLEMENT
CWS = CRACKED SLAB, WITH SETTLEMENT

SUMMARY OF QUANTITIES

PM	BEGIN WORK	PM	END WORK	DISTANCE (MILES)	No. OF SLABS								REPLACE CONCRETE PAVEMENT (RAPID STRENGTH CONCRETE)			
					NORTHBOUND				SOUTHBOUND				NORTHBOUND		SOUTHBOUND	
					LANE 1		LANE 2		LANE 1		LANE 2		LANE 1	LANE 2	LANE 1	LANE 2
					CNS	CWS	CNS	CWS	CNS	CWS	CNS	CWS	CY	CY	CY	CY
21.10	BEGIN CONSTRUCTION	21.59	ROUTE 253/101 SEPARATION	0.49	22	0	103	6	15	0	124	0	101.5	521.4	67.7	575.2
21.59	ROUTE 253/101 SEPARATION	21.80	TREATMENT PLANT OVERCROSSING	0.21	12	0	40	4	2	0	56	0	56.4	211.3	11.3	259.4
21.80	TREATMENT PLANT OVERCROSSING	22.16	SOUTH UKIAH OVERHEAD	0.36	24	0	56	13	0	0	79	6	112.8	352.0	0.0	408.6
22.16	SOUTH UKIAH OVERHEAD	23.45	ROUTE 222/101 SEPARATION	1.29	92	0	249	24	10	0	210	30	428.6	1324.3	45.1	1186.0
23.45	ROUTE 222/101 SEPARATION	23.59	DOOLIN CREEK	0.14	10	0	30	0	0	0	30	10	45.1	141.0	0.0	208.3
23.59	DOOLIN CREEK	23.82	AUSTIN CREEK	0.23	33	0	51	4	5	0	42	0	152.3	262.1	22.6	197.4
23.82	AUSTIN CREEK	24.06	GOBBI STREET OVERCROSSING	0.24	13	0	45	6	5	0	39	0	62.0	250.7	22.6	180.4
24.06	GOBBI STREET OVERCROSSING	24.30	OAK MANOR SCHOOL PEDESTRIAN OVERCROSSING	0.24	21	0	67	0	5	0	42	0	95.9	310.1	22.6	197.4
24.30	OAK MANOR SCHOOL PEDESTRIAN OVERCROSSING	24.53	EAST PERKINS STREET OVERCROSSING	0.23	17	0	36	0	0	0	21	0	78.9	169.2	0.0	95.9
24.53	EAST PERKINS STREET OVERCROSSING	25.01	ORRS CREEK	0.48	44	0	81	4	4	0	50	0	203.0	403.1	16.9	231.2
25.01	ORRS CREEK	25.72	PRESSWOOD OVERHEAD	0.71	70	0	171	0	8	0	112	12	327.1	795.1	39.5	602.9
25.72	PRESSWOOD OVERHEAD	26.16	NORTH STATE STREET UNDERCROSSING	0.44	41	0	53	6	5	0	49	6	191.7	290.2	22.6	267.6
26.16	NORTH STATE STREET UNDERCROSSING	26.66	ACKERMAN CREEK	0.50	38	0	121	6	23	0	127	36	174.8	606.0	107.1	844.6
26.66	ACKERMAN CREEK	27.00	HENSLEY CREEK	0.34	27	0	69	4	27	0	67	6	124.1	346.7	124.1	352.2
27.00	HENSLEY CREEK	27.41	LAKE MENDOCINO DRIVE UNDERCROSSING	0.41	21	0	78	2	28	0	98	24	95.9	377.7	129.7	625.1
27.41	LAKE MENDOCINO DRIVE UNDERCROSSING	27.92	PARDUCCI ROAD OVERCROSSING	0.51	27	0	91	6	12	0	100	12	124.1	465.0	56.4	546.6
27.92	PARDUCCI ROAD OVERCROSSING	28.26	YORK CREEK	0.34	6	0	73	4	21	0	78	6	28.2	363.6	95.9	403.0
28.26	YORK CREEK	28.56	POMO LANE UNDERCROSSING	0.30	11	0	34	2	5	0	70	0	50.8	174.7	22.6	327.1
28.56	POMO LANE UNDERCROSSING	29.84	CENTRAL AVENUE OVERCROSSING	1.28	57	0	200	12	52	0	255	30	265.0	1014.6	242.5	1394.6
29.84	CENTRAL AVENUE OVERCROSSING	30.43	MOORE STREET UNDERCROSSING	0.59	22	0	103	6	36	0	152	0	101.5	521.4	169.2	704.9
30.43	MOORE STREET UNDERCROSSING	30.82	101/20 SEPARATION	0.39	18	0	45	0	11	0	109	0	84.6	208.6	50.8	507.5
30.82	101/20 SEPARATION	31.88	FORSYTHE CREEK	1.06	13	0	97	97	4	0	38	0	69.4	1279.3	18.9	195.7
31.88	FORSYTHE CREEK	32.63	WEST ROAD OVERCROSSING	0.75	4	0	121	49	4	0	49	0	18.9	1018.4	18.9	252.5
32.63	WEST ROAD OVERCROSSING	33.70	END CONSTRUCTION	1.07	2	0	125	36	4	0	118	18	12.6	940.5	18.9	757.5
			SUBTOTAL	12.60	645	0	2,141	291	284	0	2,113	198	3,005.1	12,347.0	1,325.6	11,321.4
			TOTAL		5,673								27,999			

REVISED BY | DATE REVISED
L. MORALES | N. FORMOLI
CALCULATED-DESIGNED BY | CHECKED BY
FUNCTIONAL SUPERVISOR
NESAR FORMOLI

STATE OF CALIFORNIA - DEPARTMENT OF TRANSPORTATION
Caltrans
NORTH REGION
OFFICE OF DESIGN, SOUTH
DESIGN BRANCH S14

SUMMARY OF QUANTITIES

Q-1

LAST REVISION 11-05-09 | DATE PLOTTED => 12-JAN-2010 | TIME PLOTTED => 13:26

Dist	COUNTY	ROUTE	POST MILES TOTAL PROJECT	SHEET No.	TOTAL SHEETS
01	Men	101	21.1/33.7	18	22

Leobardo Morales 11-5-09
REGISTERED CIVIL ENGINEER DATE

1-11-10
PLANS APPROVAL DATE

REGISTERED PROFESSIONAL ENGINEER
LEOBARDO MORALES
No. 72023
Exp. 6-30-10
CIVIL
STATE OF CALIFORNIA

THE STATE OF CALIFORNIA OR ITS OFFICERS OR AGENTS SHALL NOT BE RESPONSIBLE FOR THE ACCURACY OR COMPLETENESS OF SCANNED COPIES OF THIS PLAN SHEET.

DIKE QUANTITIES

LOCATION	REMOVE DIKE		HMA DIKE (TYPE E)	
	NORTHBOUND	SOUTHBOUND	NORTHBOUND	SOUTHBOUND
	LF	LF	LF	LF
PM 20.91 TO PM 21.21	1,584		1,584	
PM 21.32 TO PM 21.51		1,003		1,003
PM 21.59 TO PM 21.96		1,954		1,954
PM 21.59 TO PM 22.24	3,432		3,432	
PM 22.16 TO PM 23.16		5,280		5,280
PM 22.48 TO PM 23.00	2,746		2,746	
PM 23.38 TO PM 23.61		1,214		1,214
PM 23.61 TO PM 23.89	1,478		1,478	
PM 23.69 TO PM 23.82		686		686
SUBTOTAL	9,240	10,137	9,240	10,137
TOTAL LINEAR FEET	19,377		19,377	
TOTAL TON			510	

NOTES: FOR DETAILS NOT SHOWN SEE Std Plan A87B

GRIND EXISTING CONCRETE PAVEMENT

LOCATION	PROFILE GRIND	
	NORTHBOUND	SOUTHBOUND
	SQYD	SQYD
PM 21.1 TO PM 31.0	139,392	139,392
PM 31.0 TO PM 33.7	38,016	38,016
SUBTOTAL	177,408	177,408
TOTAL	354,816	

COLD PLANE AND HMA SHOULDER

LOCATION	NB/SB	COLD PLANE HMA		HMA (TYPE A)	
		OUTSIDE	INSIDE	OUTSIDE	INSIDE
		SQYD	SQYD	TON	TON
PM 21.10 TO PM 23.90	NB	13,141		1,774	
PM 21.10 TO PM 31.00	NB		11,616		1,568
PM 21.10 TO PM 23.90	SB	13,141		1,774	
PM 21.10 TO PM 31.00	SB		11,616		1,568
SUBTOTAL		26,282	23,232	3,548	3,136
HMA DIKE		510			
OVERSIDE DRAINS		10.6			
TOTAL		49,514		7,204.6	

SHOULDER RUMBLE STRIP

LOCATION	NB/SB	PCC GROUND-IN INDENTATIONS OUTSIDE SHOULDER	HMA GROUND-IN INDENTATIONS INSIDE SHOULDER
		Sta	Sta
PM 21.10 TO PM 33.7	NB	665	665
PM 21.10 TO PM 33.7	SB	665	665
TOTAL		1330	1330

NOTES: FOR DETAILS NOT SHOWN SEE Std Plan A40A OR A40B
RUMBLE STRIP SHOULD NOT BE PLACED WITHIN THE ON OR OFF RAMP

ASPHALTIC EMULSION (FOG SEAL COAT)

LOCATION	NORTHBOUND	SOUTHBOUND
	TON	TON
PM 21.1 TO PM 33.7	55	55
TOTAL	110	

OVERSIDE DRAINS

OVERSIDE DRAIN PM	DIRECTION	DRAIN WIDTH	CHANNEL LENGTH	CHANNEL WIDTH	DEPTH	HOT MIX ASPHALT (TYPE A)	PLACE HMA (MISC AREA)	REMOVE
		FT	FT	FT	FT	TON	SQ FT	EA
21.47	SB	14	6	3	0.25	1.1	32	1
21.57	NB	13	8	3	0.25	1.2	37	1
22.31	NB	13	8	3	0.25	1.2	37	1
22.39	SB	13	8	3	0.25	1.2	37	1
22.51	SB	13	8	3	0.25	1.2	37	1
22.53	NB	13	8	3	0.25	1.2	37	1
22.63	NB	13	8	3	0.25	1.2	37	1
22.92	SB	13	8	3	0.25	1.2	37	1
22.95	NB	13	8	3	0.25	1.2	37	1
					TOTAL	10.6	328	9

FOR DETAILS NOT SHOWN SEE STANDARD PLAN D87D

SUMMARY OF QUANTITIES

Q-2

STATE OF CALIFORNIA - DEPARTMENT OF TRANSPORTATION
NORTH REGION
OFFICE OF DESIGN, SOUTH
DESIGN BRANCH S14
Caltrans

CALCULATED-DESIGNED BY: L. MORALES
CHECKED BY: N. FORMOLI
FUNCTIONAL SUPERVISOR: NESAR FORMOLI
REVISED BY
DATE REVISED

LAST REVISION 11-05-09
DATE PLOTTED => 13-JAN-2010
TIME PLOTTED => 11:19

DIST	COUNTY	ROUTE	POST MILES TOTAL PROJECT	SHEET NO.	TOTAL SHEETS
01	Men	101	21.1/33.7	19	22

William K. Farnbach
REGISTERED CIVIL ENGINEER

May 15, 2009
PLANS APPROVAL DATE

REGISTERED PROFESSIONAL ENGINEER
William K. Farnbach
No. C49042
Exp. 9-30-10
CIVIL
STATE OF CALIFORNIA

The State of California or its officers or agents shall not be responsible for the accuracy or completeness of electronic copies of this plan sheet.

To accompany plans dated 1-11-10

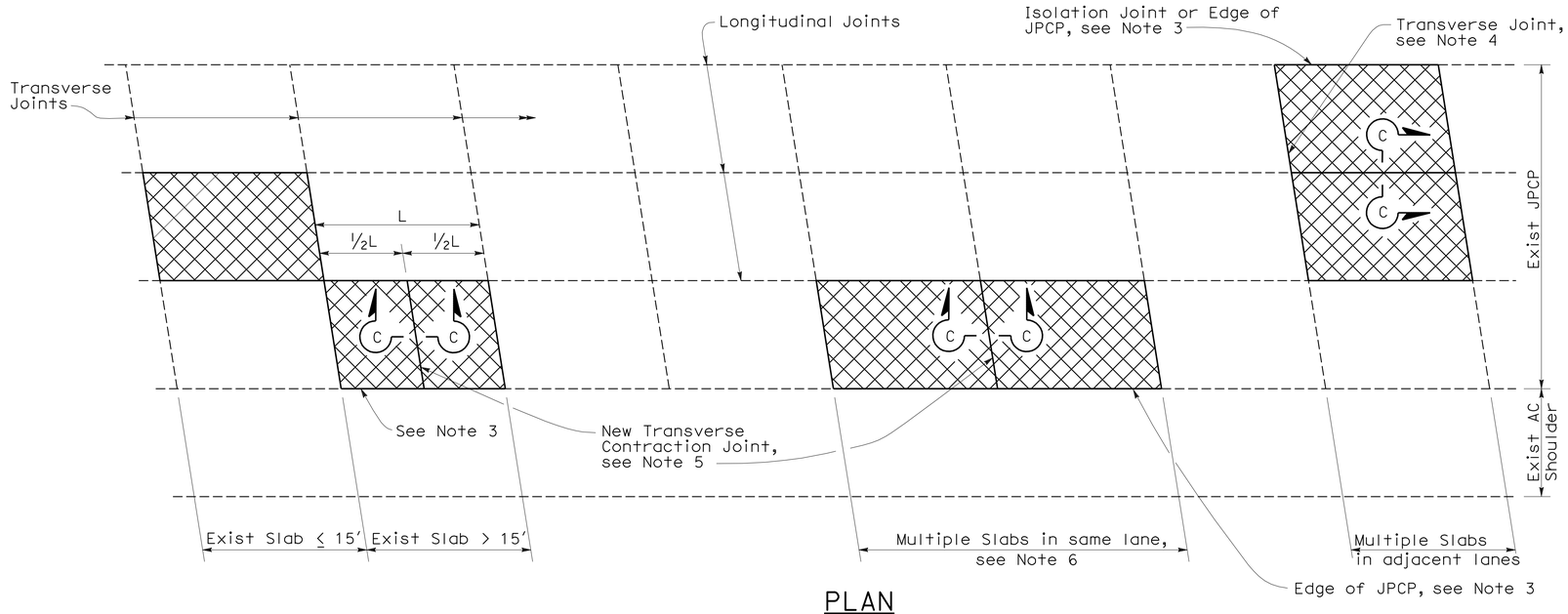

PLAN

NOTES:

1. For details not shown, see Revised Standard Plan RSP P10.
2. Where the existing outer shoulder pavement is asphalt concrete pavement, the "a" dimension shall be 1′-0" and the "b" dimension shall be 2′-0".
3. Side forms shall be used where edge of pavement is adjacent to asphalt concrete.
4. For detail, see Transverse Construction Joint for existing concrete pavement detail on Revised Standard Plan RSP P10.
5. Transverse joint to match skew of existing joint. Omit dowel bars.
6. This Standard Plan only applicable when replacing multiple slabs in the same lane is less than 100′.

LEGEND

Replace Concrete Pavement (See Slab Layout Detail)

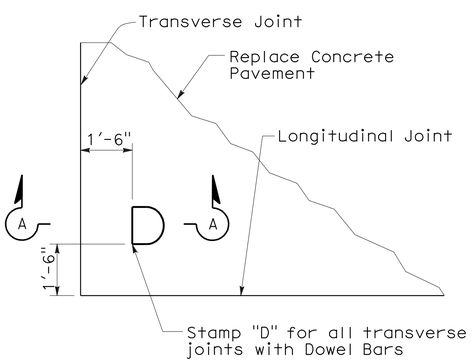

DOWEL STAMP DETAIL

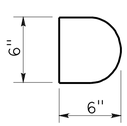

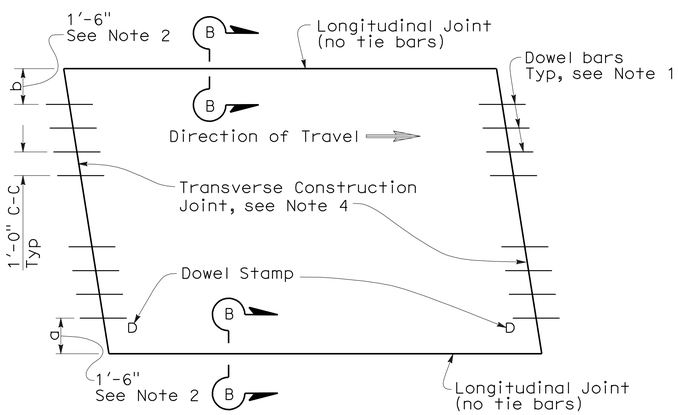

TYPE I
(traffic lane lines match longitudinal joints)

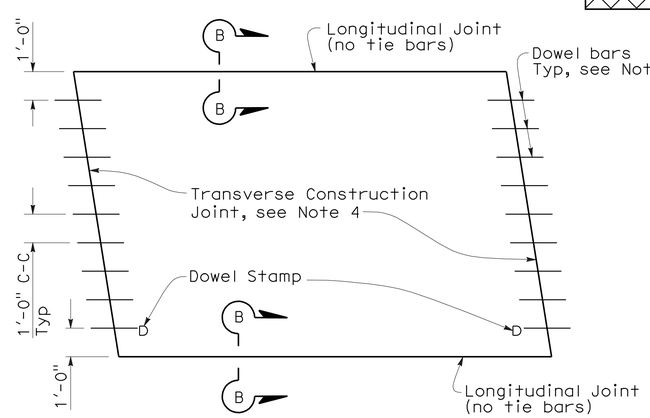

TYPE II
(traffic lane lines do not match longitudinal joints)

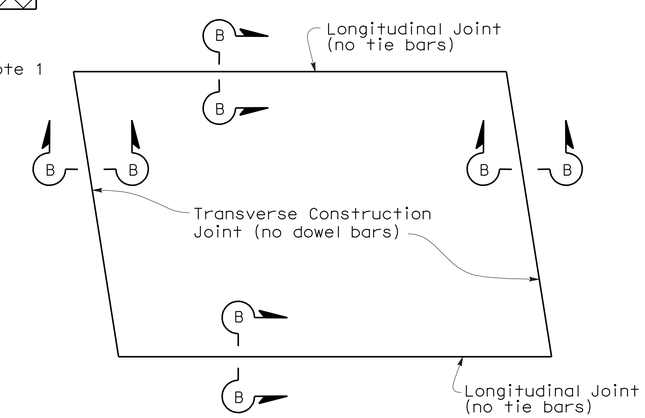

TYPE III
(for short term repairs < 5 yrs design life or for slab replacements with a cracking and seating operation)

SLAB LAYOUT

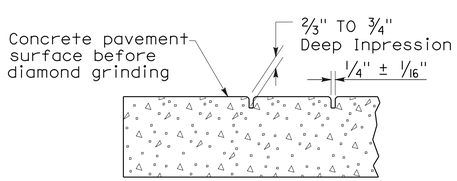

SECTION A-A

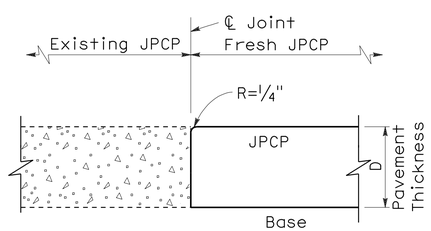

SECTION B-B

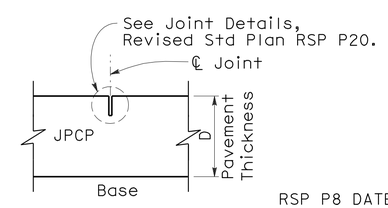

SECTION C-C

STATE OF CALIFORNIA
DEPARTMENT OF TRANSPORTATION

JOINTED PLAIN CONCRETE PAVEMENT-INDIVIDUAL SLAB REPLACEMENT

NO SCALE

RSP P8 DATED MAY 15, 2009 SUPERSEDES RSP P8 DATED SEPTEMBER 1, 2006 AND STANDARD PLAN P8 DATED MAY 1, 2006 - PAGE 123 OF THE STANDARD PLANS BOOK DATED MAY 2006.

REVISED STANDARD PLAN RSP P8

2006 REVISED STANDARD PLAN RSP P8

5-8-09

DIST	COUNTY	ROUTE	POST MILES TOTAL PROJECT	SHEET NO.	TOTAL SHEETS
01	Men	101	21.1/33.7	20	22

Randell D. Hiatt
REGISTERED CIVIL ENGINEER

June 6, 2008
PLANS APPROVAL DATE

REGISTERED PROFESSIONAL ENGINEER
Randell D. Hiatt
No. C50200
Exp. 6-30-09
CIVIL
STATE OF CALIFORNIA

The State of California or its officers or agents shall not be responsible for the accuracy or completeness of electronic copies of this plan sheet.

To accompany plans dated 1-11-10

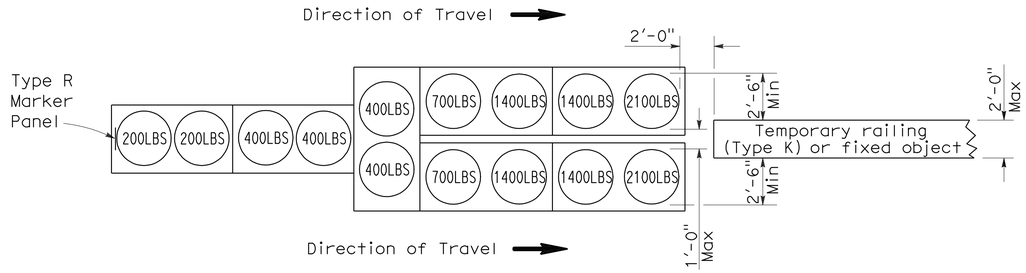

ARRAY 'TU14'

Approach speed 45 mph or more

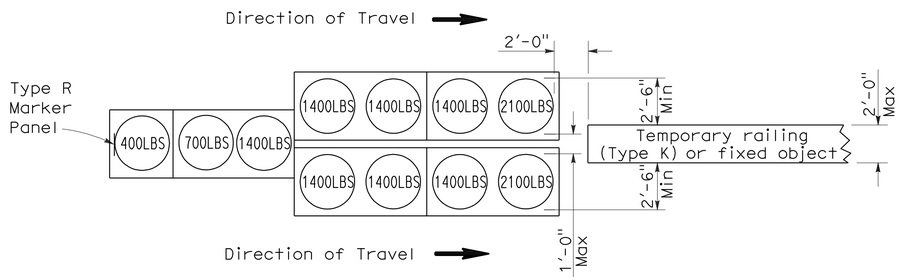

ARRAY 'TU11'

Approach speed less than 45 mph

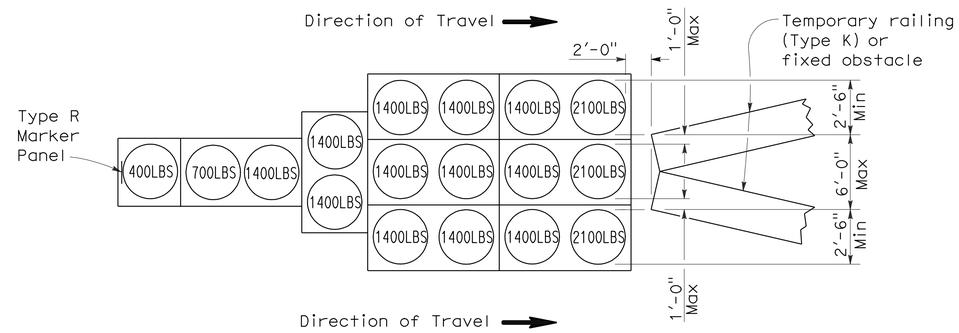

ARRAY 'TU17'

Approach speed less than 45 mph

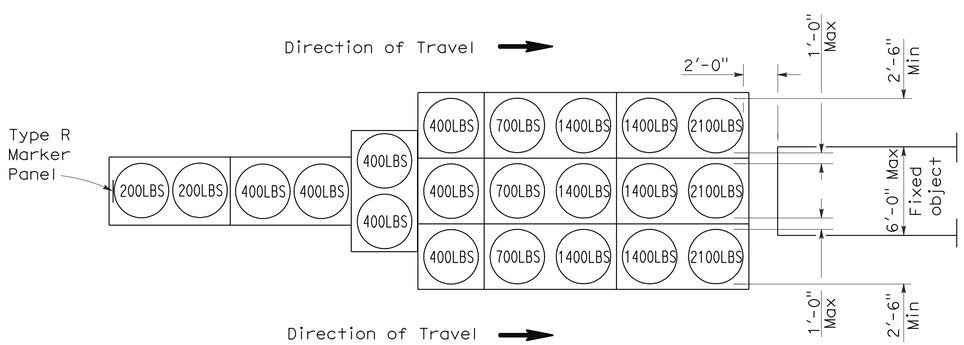

ARRAY 'TU21'

Approach speed 45 mph or more

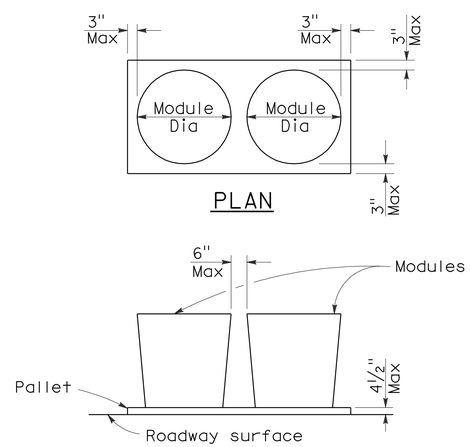

ELEVATION

CRASH CUSHION PALLET DETAIL

See Note 7

NOTES:

1. (XXX) Indicates sand filled module location and weight of sand in pounds for each module. Module spacing is based on the greater diameter of the module.
2. All sand weights are nominal.
3. Temporary crash cushion arrays shall not encroach on the traveled way.
4. Place the top of Type R marker panel 1" below the module lid.
5. Refer to Standard Plan A73B for marker details.
6. Approach speeds indicated conform to NCHRP 350 Report criteria.
7. Use of pallets is optional.

STATE OF CALIFORNIA
DEPARTMENT OF TRANSPORTATION

TEMPORARY CRASH CUSHION, SAND FILLED (UNIDIRECTIONAL)

NO SCALE

RSP T1A DATED JUNE 6, 2008 SUPERSEDES STANDARD PLAN T1A
DATED MAY 1, 2006 - PAGE 211 OF THE STANDARD PLANS BOOK DATED MAY 2006.

REVISED STANDARD PLAN RSP T1A

2006 REVISED STANDARD PLAN RSP T1A

DIST	COUNTY	ROUTE	POST MILES TOTAL PROJECT	SHEET NO.	TOTAL SHEETS
01	Men	101	21.1/33.7	21	22

Randell D. Hiatt
REGISTERED CIVIL ENGINEER

June 6, 2008
PLANS APPROVAL DATE

REGISTERED PROFESSIONAL ENGINEER
Randell D. Hiatt
No. C50200
Exp. 6-30-09
CIVIL
STATE OF CALIFORNIA

The State of California or its officers or agents shall not be responsible for the accuracy or completeness of electronic copies of this plan sheet.

To accompany plans dated 1-11-10

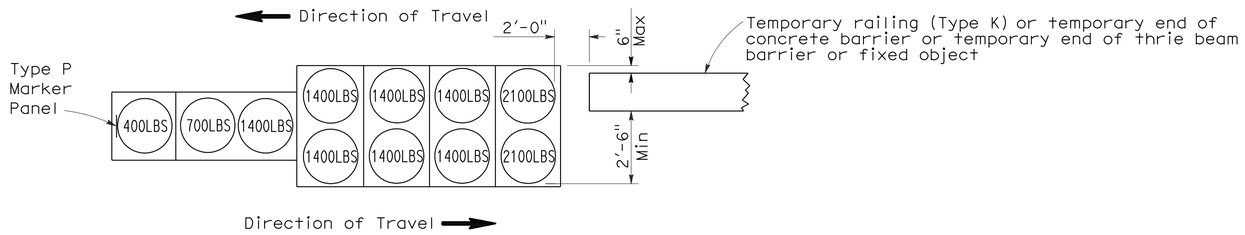

ARRAY 'TB11'

Approach speed less than 45 mph

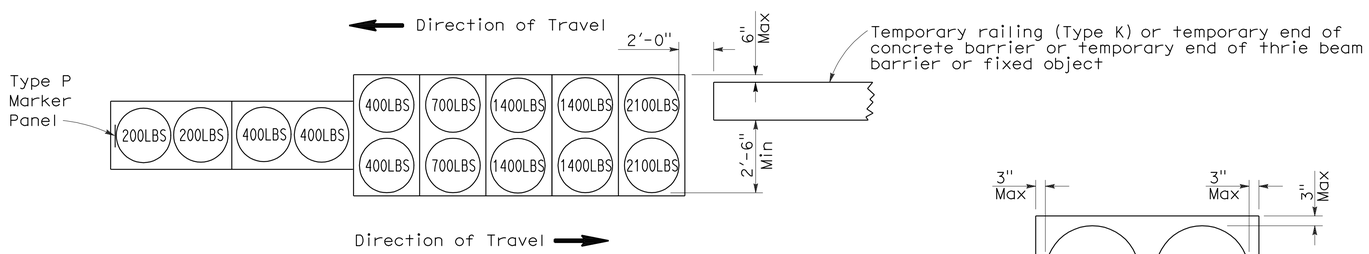

ARRAY 'TB14'

Approach speed 45 mph or more

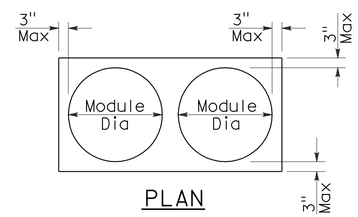

PLAN

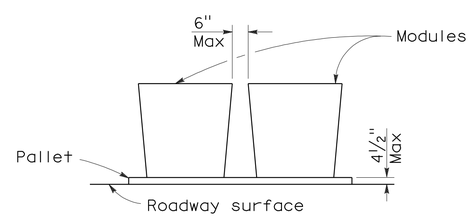

ELEVATION

CRASH CUSHION PALLET DETAIL

See Note 7

NOTES:

1. (XXX) Indicates sand filled module location and weight of sand in pounds for each module. Module spacing is based on the greater diameter of the module.
2. All sand weights are nominal.
3. Temporary crash cushion arrays shall not encroach on the traveled way.
4. Place the Type P marker panel so that the bottom of the panel rests upon the pallet.
5. Refer to Standard Plan A73B for marker details.
6. Approach speeds indicated conform to NCHRP 350 Report criteria.
7. Use of pallets is optional.

STATE OF CALIFORNIA
DEPARTMENT OF TRANSPORTATION

TEMPORARY CRASH CUSHION, SAND FILLED (BIDIRECTIONAL)

NO SCALE

RSP T1B DATED JUNE 6, 2008 SUPERSEDES STANDARD PLAN T1B
DATED MAY 1, 2006 - PAGE 212 OF THE STANDARD PLANS BOOK DATED MAY 2006.

REVISED STANDARD PLAN RSP T1B

2006 REVISED STANDARD PLAN RSP T1B

5-15-08

DIST	COUNTY	ROUTE	POST MILES TOTAL PROJECT	SHEET NO.	TOTAL SHEETS
01	Men	101	21.1/33.7	22	22

Randell D. Hiatt
REGISTERED CIVIL ENGINEER

June 6, 2008
PLANS APPROVAL DATE

REGISTERED PROFESSIONAL ENGINEER
Randell D. Hiatt
No. C50200
Exp. 6-30-09
CIVIL
STATE OF CALIFORNIA

The State of California or its officers or agents shall not be responsible for the accuracy or completeness of electronic copies of this plan sheet.

To accompany plans dated 1-11-10

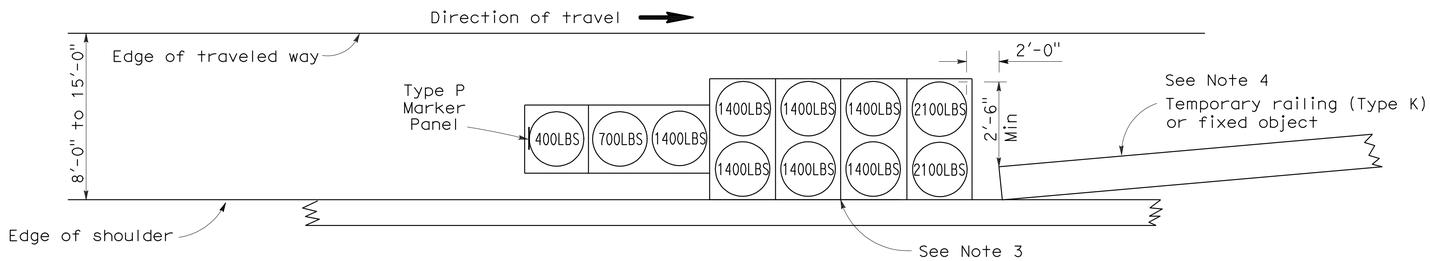

ARRAY 'TS11'

Approach speed less than 45 mph
See Note 9

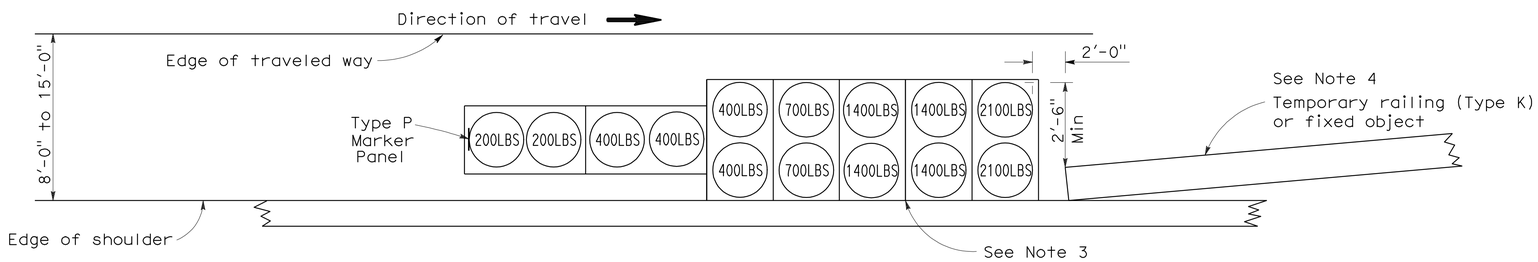

ARRAY 'TS14'

Approach speed 45 mph or more
See Note 9

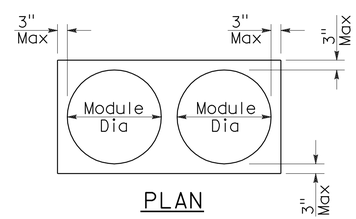

PLAN

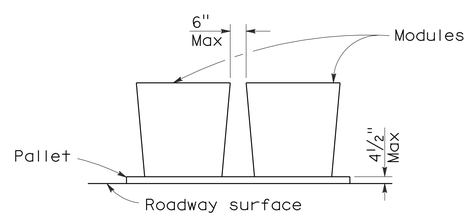

ELEVATION

CRASH CUSHION PALLET DETAIL

See Note 11

NOTES:

1. (XXX) Indicates sand filled module location and weight of sand in pounds for each module. Module spacing is based on the greater diameter of the module.
2. All sand weights are nominal.
3. The temporary crash cushion arrays shown on this plan shall be used only in locations where there will be traffic on one side of the temporary crash cushion array.
4. If the fixed object or approach end of the temporary railing is less than 15'-0" from the edge of traveled way, a temporary crash cushion is required in a construction or work zone.
5. Temporary crash cushion arrays shall not encroach on the traveled way.
6. Arrays for median shoulders shall conform to details shown on this plan for outside shoulders.
7. Place the Type P marker panel so that the bottom of the panel rests upon the pallet and faces traffic.
8. Refer to Standard Plan A73B for marker details.
9. For shoulder widths less than 8'-0", appropriate approved crash cushion protection, other than sand filled modules, shall be provided at fixed objects and at approach ends of temporary railing. The specific type of crash cushion shall be as shown on the project plans or as specified in the Special Provisions, or if not shown on the project plans or specified in the Special Provisions, shall be as approved by the Engineer.
10. Approach speeds indicated conform to NCHRP 350 Report criteria.
11. Use of pallets is optional.

STATE OF CALIFORNIA
DEPARTMENT OF TRANSPORTATION

TEMPORARY CRASH CUSHION, SAND FILLED (SHOULDER INSTALLATIONS)

NO SCALE

RSP T2 DATED JUNE 6, 2008 SUPERSEDES STANDARD PLAN T2
DATED MAY 1, 2006 - PAGE 213 OF THE STANDARD PLANS BOOK DATED MAY 2006.

REVISED STANDARD PLAN RSP T2

2006 REVISED STANDARD PLAN RSP T2

5-15-08