| Dist | COUNTY | ROUTE | POST MILES TOTAL PROJECT | SHEET No. | TOTAL SHEETS |
|---|---|---|---|---|---|
| 01 | Lak | 53 | 2.8/7.5 | 101 | 217 |

Patrice A. Stafford 3-25-10
REGISTERED CIVIL ENGINEER DATE

6-1-10
PLANS APPROVAL DATE

REGISTERED PROFESSIONAL ENGINEER
PATRICE A. STAFFORD
No. 61256
Exp. 6-30-11
CIVIL
STATE OF CALIFORNIA

*THE STATE OF CALIFORNIA OR ITS OFFICERS OR AGENTS SHALL NOT BE RESPONSIBLE FOR THE ACCURACY OR COMPLETENESS OF SCANNED COPIES OF THIS PLAN SHEET.*

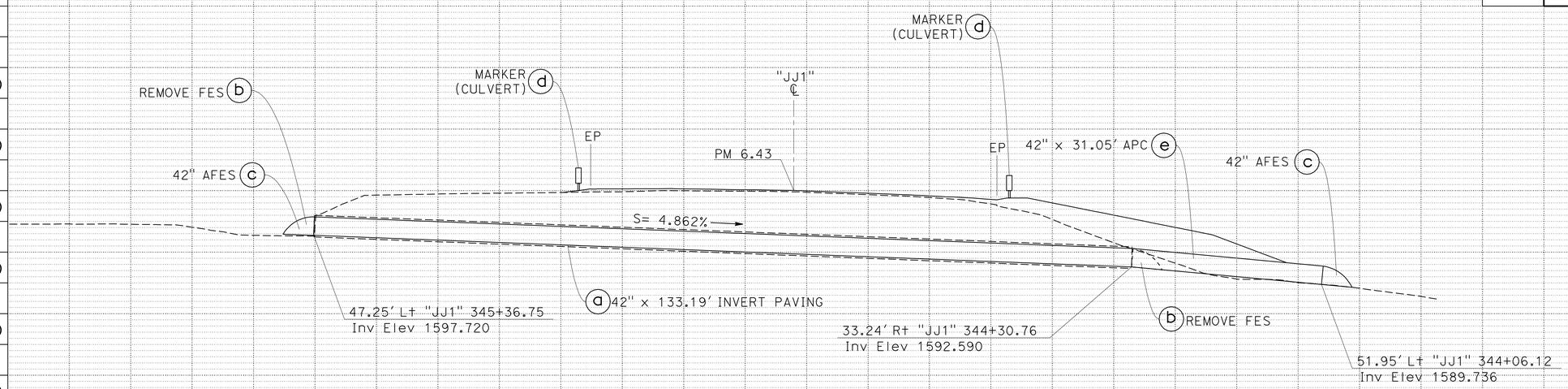


**DRAINAGE SYSTEM No. 28**

"JJ1" 344+74.52
37° SKEW

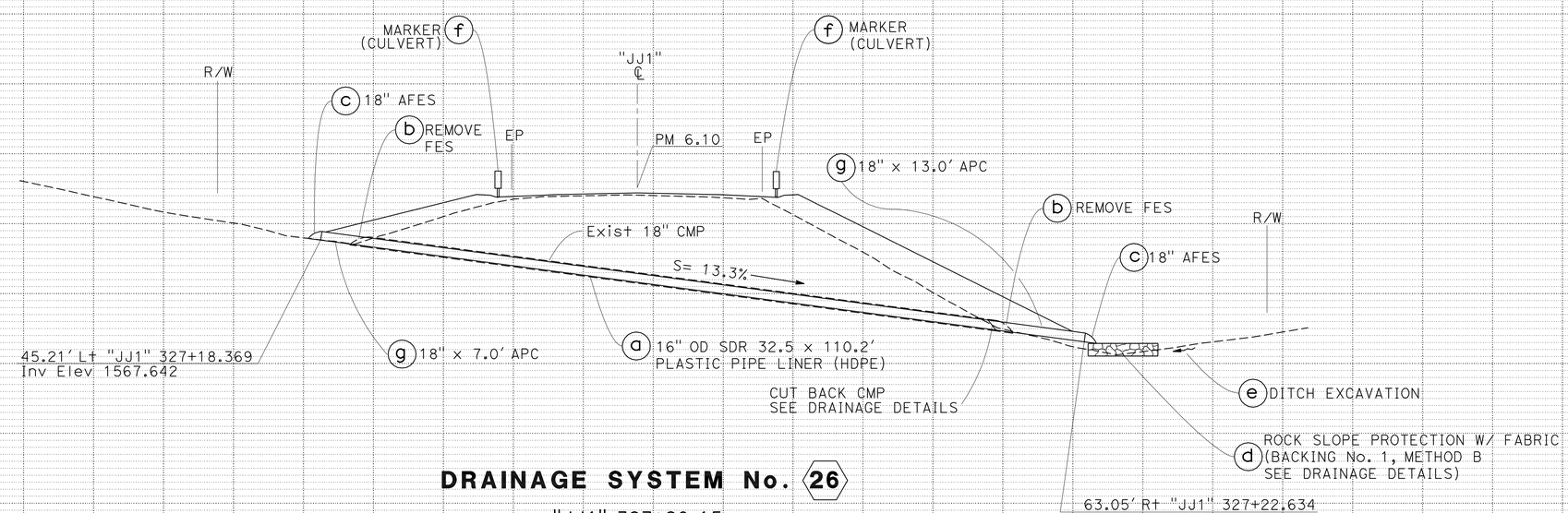


**DRAINAGE SYSTEM No. 26**

"JJ1" 327+20.15

## DRAINAGE PROFILES

SCALE: Horiz 1" = 10'
Vert 1" = 10'

**DP-13**

REVISED BY | DATE REVISED
P. STAFFORD | C. OLSON
CALCULATED-DESIGNED BY | CHECKED BY
FUNCTIONAL SUPERVISOR: C. OLSON

STATE OF CALIFORNIA - DEPARTMENT OF TRANSPORTATION
Caltrans
NORTH REGION
OFFICE OF DESIGN, SOUTH
DESIGN BRANCH S10

06:32 14-JUN-2010 trmikesl 13986uib013.dgn

DATE PLOTTED => 14-JUN-2010
TIME PLOTTED => 06:32
LAST REVISION

BORDER LAST REVISED 4/11/2008 | RELATIVE BORDER SCALE IS IN INCHES 0 1 2 3 | USERNAME => trmikesl | DGN FILE => 13986uib013.dgn | CU 03260 | EA 3986U1

| Dist | COUNTY | ROUTE | POST MILES TOTAL PROJECT | SHEET No. | TOTAL SHEETS |
|---|---|---|---|---|---|
| 01 | Lak | 53 | 2.8/7.5 | 102 | 217 |

Patrice A. Stafford 3-25-10
REGISTERED CIVIL ENGINEER DATE

6-1-10
PLANS APPROVAL DATE

REGISTERED PROFESSIONAL ENGINEER
PATRICE A. STAFFORD
No. 61256
Exp. 6-30-11
CIVIL
STATE OF CALIFORNIA

THE STATE OF CALIFORNIA OR ITS OFFICERS OR AGENTS SHALL NOT BE RESPONSIBLE FOR THE ACCURACY OR COMPLETENESS OF SCANNED COPIES OF THIS PLAN SHEET.

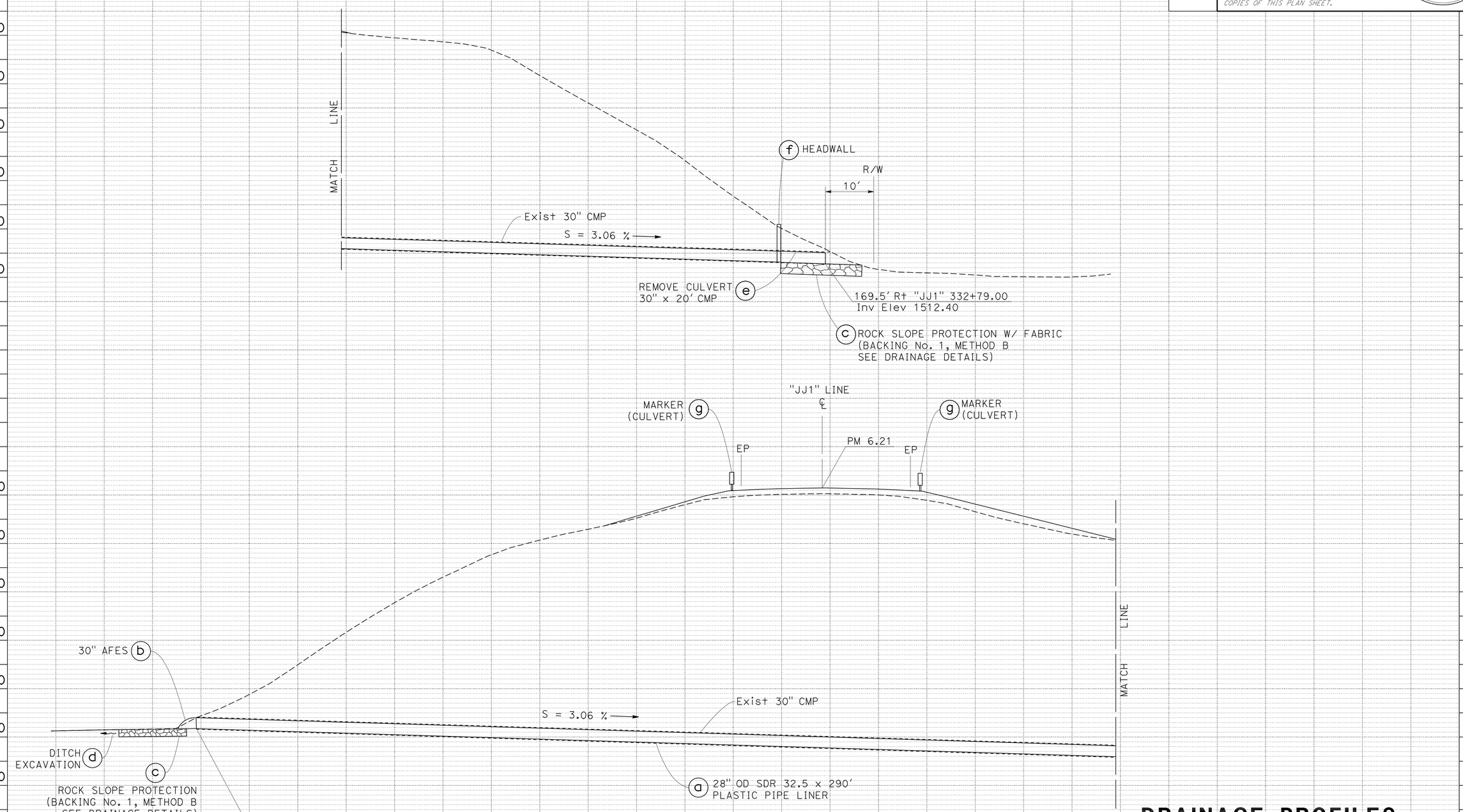


## DRAINAGE SYSTEM No. 27

"JJ1" 327+87.08

## DRAINAGE PROFILES

SCALE: Horiz 1" = 10'
Vert 1" = 10'

DP-14

REVISED BY | DATE REVISED
P. STAFFORD | C. OLSON
CALCULATED-DESIGNED BY | CHECKED BY
FUNCTIONAL SUPERVISOR
C. OLSON

STATE OF CALIFORNIA - DEPARTMENT OF TRANSPORTATION
NORTH REGION
OFFICE OF DESIGN, SOUTH
DESIGN BRANCH S10

06:32 14-JUN-2010 trmikesl 13986uib014.dgn

LAST REVISION 03-25-10 | DATE PLOTTED => 14-JUN-2010 | TIME PLOTTED => 06:32

BORDER LAST REVISED 4/11/2008 | RELATIVE BORDER SCALE IS IN INCHES 0 1 2 3 | USERNAME => trmikesl | DGN FILE => 13986uib014.dgn | CU 03260 | EA 3986U1

| Dist | COUNTY | ROUTE | POST MILES TOTAL PROJECT | SHEET No. | TOTAL SHEETS |
|---|---|---|---|---|---|
| 01 | Lak | 53 | 2.8/7.5 | 103 | 217 |

Patrice A. Stafford 3-25-10
REGISTERED CIVIL ENGINEER DATE

6-1-10
PLANS APPROVAL DATE

REGISTERED PROFESSIONAL ENGINEER
PATRICE A. STAFFORD
No. 61256
Exp. 6-30-11
CIVIL
STATE OF CALIFORNIA

*THE STATE OF CALIFORNIA OR ITS OFFICERS OR AGENTS SHALL NOT BE RESPONSIBLE FOR THE ACCURACY OR COMPLETENESS OF SCANNED COPIES OF THIS PLAN SHEET.*

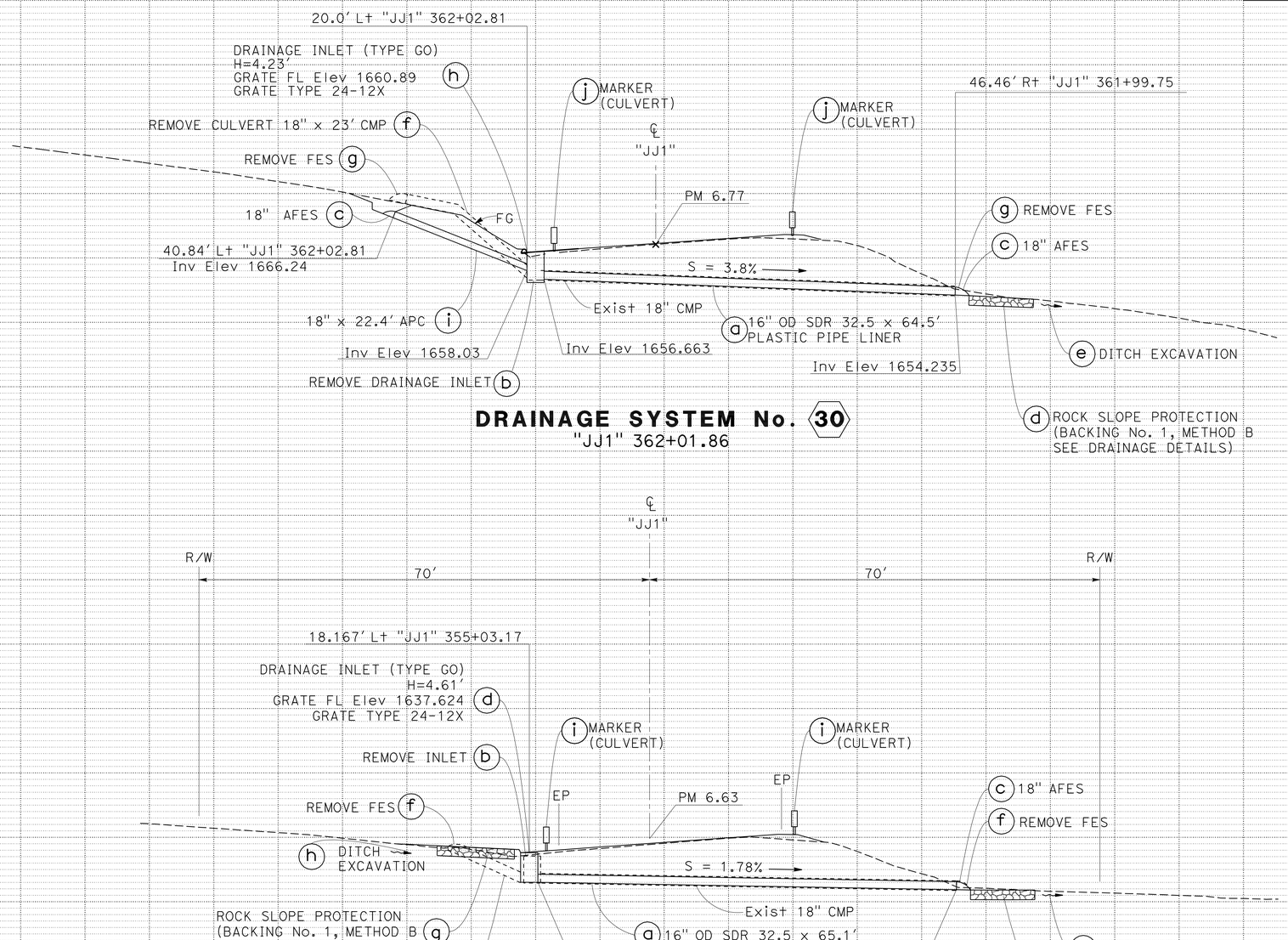


## DRAINAGE SYSTEM No. 30

"JJ1" 362+01.86




## DRAINAGE SYSTEM No. 29

"JJ1" 355+04.00

## DRAINAGE PROFILES

SCALE Horiz 1" = 10'
Vert 1" = 10'

**DP-15**

| REVISED BY | DATE REVISED |
|---|---|
| | |

P. STAFFORD — C. OLSON

CALCULATED-DESIGNED BY — CHECKED BY

FUNCTIONAL SUPERVISOR: C. OLSON

STATE OF CALIFORNIA - DEPARTMENT OF TRANSPORTATION
NORTH REGION
OFFICE OF DESIGN, SOUTH
DESIGN BRANCH S10

Caltrans

06:32 14-JUN-2010 trmikesl 13986uib015.dgn

LAST REVISION 00-00-00 | DATE PLOTTED => 14-JUN-2010 | TIME PLOTTED => 06:32

| Dist | COUNTY | ROUTE | POST MILES TOTAL PROJECT | SHEET No. | TOTAL SHEETS |
|---|---|---|---|---|---|
| 01 | Lak | 53 | 2.8/7.5 | 104 | 217 |

Patrice A. Stafford 3-25-10
REGISTERED CIVIL ENGINEER DATE

6-1-10
PLANS APPROVAL DATE

REGISTERED PROFESSIONAL ENGINEER
PATRICE A. STAFFORD
No. 61256
Exp. 6-30-11
CIVIL
STATE OF CALIFORNIA

*THE STATE OF CALIFORNIA OR ITS OFFICERS OR AGENTS SHALL NOT BE RESPONSIBLE FOR THE ACCURACY OR COMPLETENESS OF SCANNED COPIES OF THIS PLAN SHEET.*

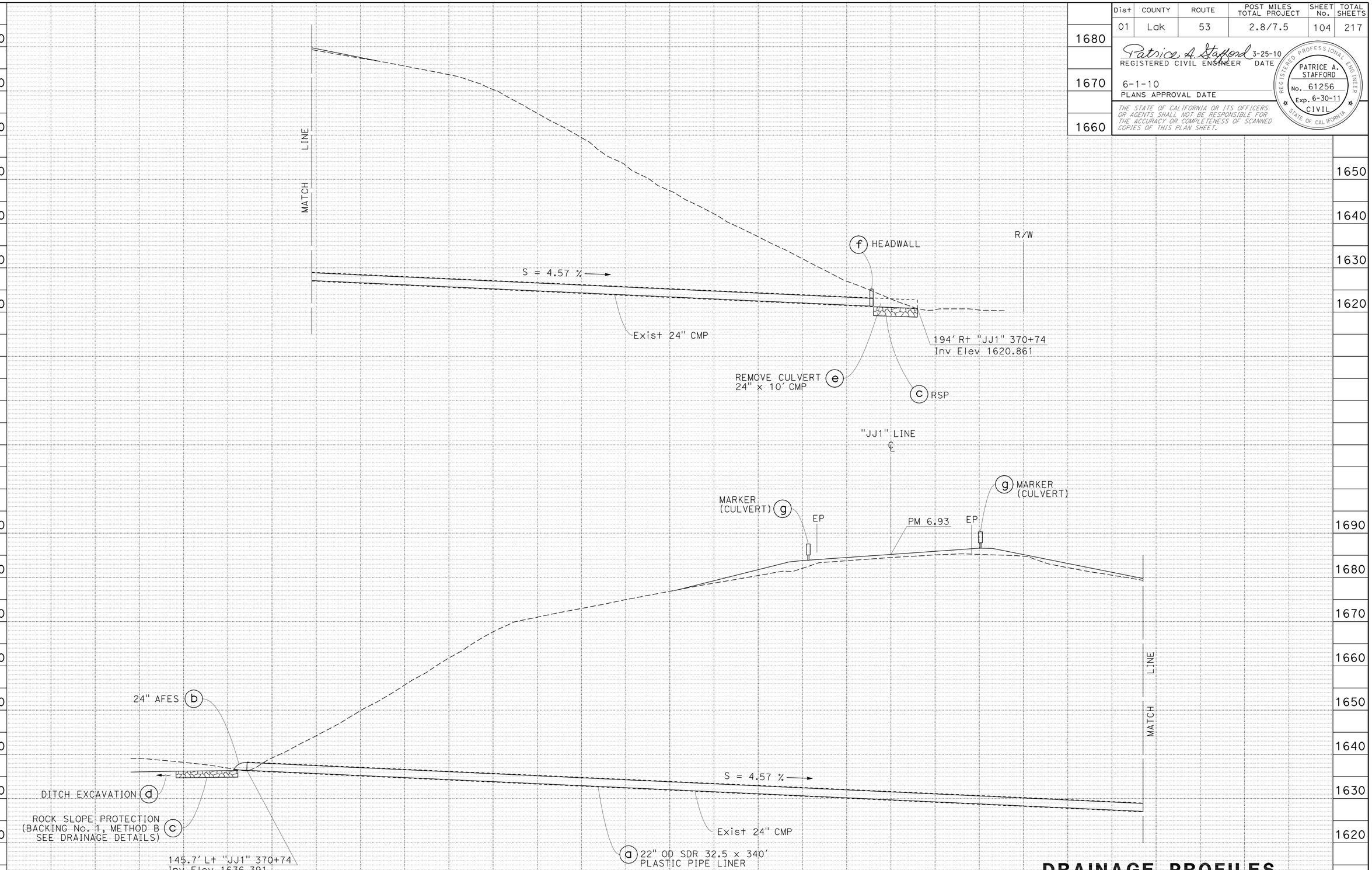


## DRAINAGE SYSTEM No. 31

"JJ1" 370+74

## DRAINAGE PROFILES

SCALE: Horiz 1" = 10'
Vert 1" = 10'

**DP-16**

REVISED BY | DATE REVISED
P. STAFFORD | C. OLSON
CALCULATED-DESIGNED BY | CHECKED BY
FUNCTIONAL SUPERVISOR
C. OLSON

STATE OF CALIFORNIA - DEPARTMENT OF TRANSPORTATION
NORTH REGION
OFFICE OF DESIGN, SOUTH
DESIGN BRANCH S10

06:32 14-JUN-2010 trmikesl 13986uib016.dgn

LAST REVISION 03-25-10 | DATE PLOTTED => 14-JUN-2010 | TIME PLOTTED => 06:32

| Dist | COUNTY | ROUTE | POST MILES TOTAL PROJECT | SHEET No. | TOTAL SHEETS |
|---|---|---|---|---|---|
| 01 | Lak | 53 | 2.8/7.5 | 105 | 217 |

Patrice A. Stafford 3-25-10
REGISTERED CIVIL ENGINEER DATE

6-1-10
PLANS APPROVAL DATE

REGISTERED PROFESSIONAL ENGINEER
PATRICE A. STAFFORD
No. 61256
Exp. 6-30-11
CIVIL
STATE OF CALIFORNIA

*THE STATE OF CALIFORNIA OR ITS OFFICERS OR AGENTS SHALL NOT BE RESPONSIBLE FOR THE ACCURACY OR COMPLETENESS OF SCANNED COPIES OF THIS PLAN SHEET.*

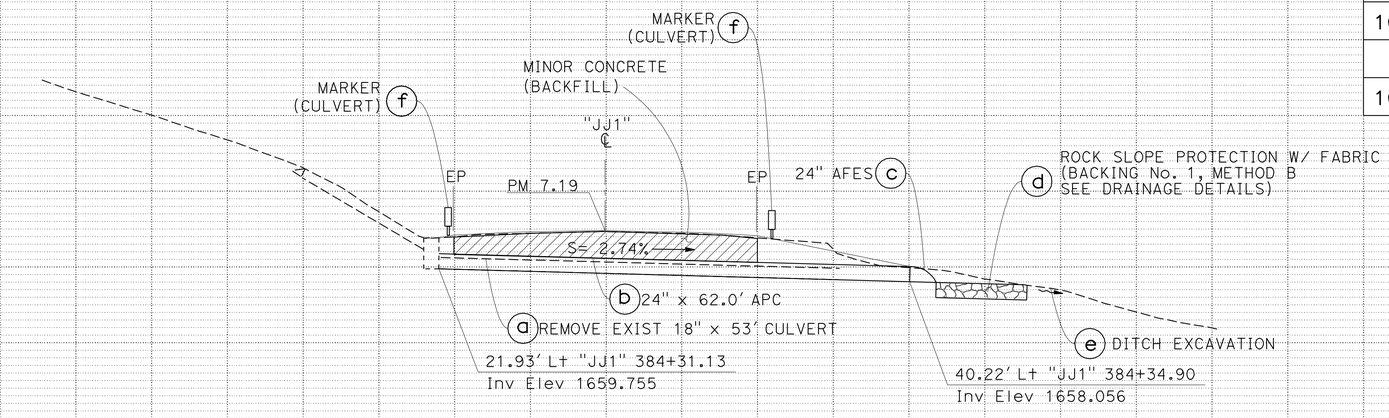


**DRAINAGE SYSTEM No. 33**
"JJ1" 384+32.46

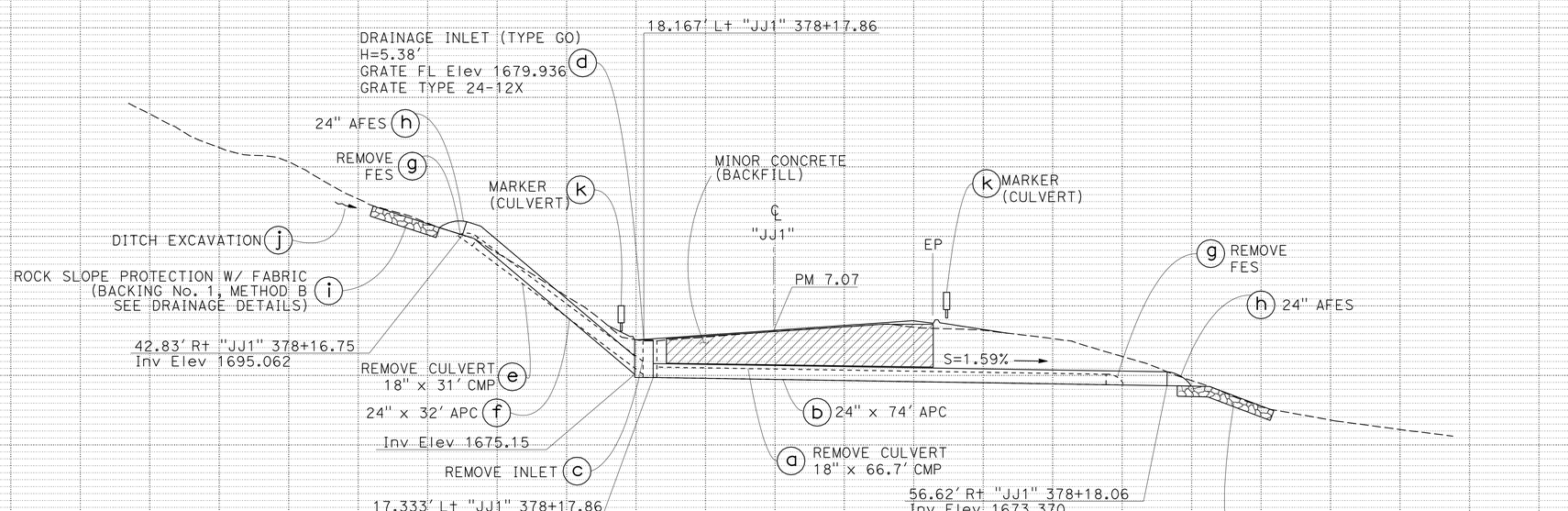


**DRAINAGE SYSTEM No. 32**
"JJ1" 378+17.92

# DRAINAGE PROFILES

SCALE: Horiz 1" = 10'
Vert 1" = 10'

**DP-17**

REVISED BY | DATE REVISED
P. STAFFORD | C. OLSON
CALCULATED-DESIGNED BY | CHECKED BY
FUNCTIONAL SUPERVISOR: C. OLSON

STATE OF CALIFORNIA - DEPARTMENT OF TRANSPORTATION
NORTH REGION
OFFICE OF DESIGN, SOUTH
DESIGN BRANCH S10
Caltrans

06:32 14-JUN-2010 trmikesl 13986uib017.dgn

DATE PLOTTED => 14-JUN-2010
TIME PLOTTED => 06:32
LAST REVISION

| Dist | COUNTY | ROUTE | POST MILES TOTAL PROJECT | SHEET No. | TOTAL SHEETS |
|---|---|---|---|---|---|
| 01 | Lak | 53 | 2.8/7.5 | 106 | 217 |

Patrice A. Stafford 3-25-10
REGISTERED CIVIL ENGINEER DATE

6-1-10
PLANS APPROVAL DATE

REGISTERED PROFESSIONAL ENGINEER
PATRICE A. STAFFORD
No. 61256
Exp. 6-30-11
CIVIL
STATE OF CALIFORNIA

*THE STATE OF CALIFORNIA OR ITS OFFICERS OR AGENTS SHALL NOT BE RESPONSIBLE FOR THE ACCURACY OR COMPLETENESS OF SCANNED COPIES OF THIS PLAN SHEET.*

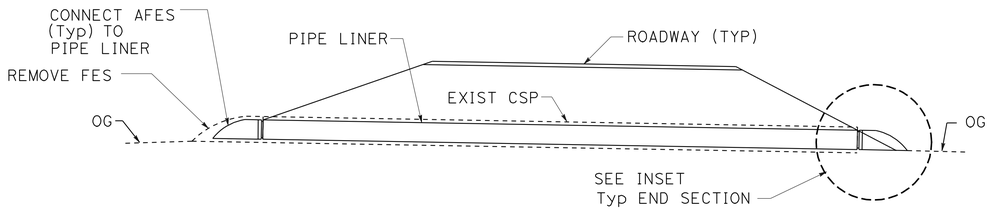


## PIPE LINER DETAILS

SEE Std PLAN D94A FOR ADDITIONAL DETAILS ON FES CONNECTIONS

### DRAINAGE SYSTEM No.

| | | | | |
|---|---|---|---|---|
| 1 a | 7 a | 21 a | 26 a | 29 a |
| 2 a | 10 a | 22 a | 27 a | 30 a |
| 3 a | 20 d | 23 a | 28 a | 31 a |

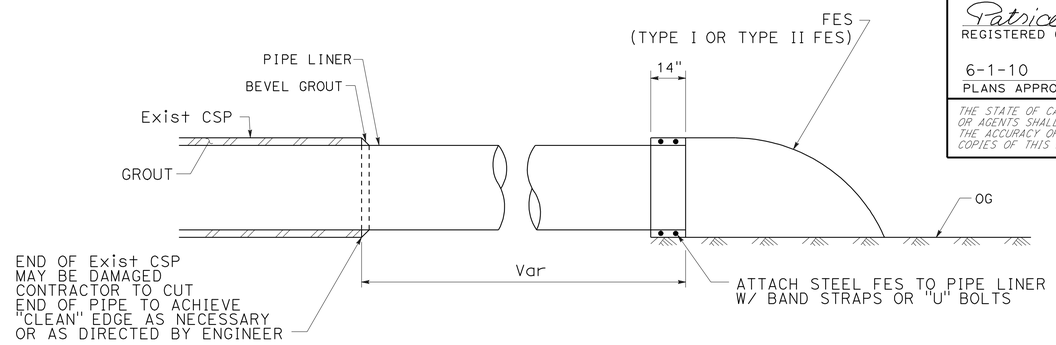


INSET "A"
TYPICAL END SECTION

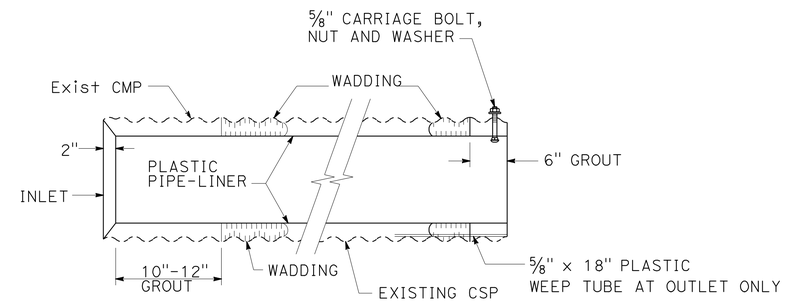


## PLAN
## PLASTIC PIPE-LINER

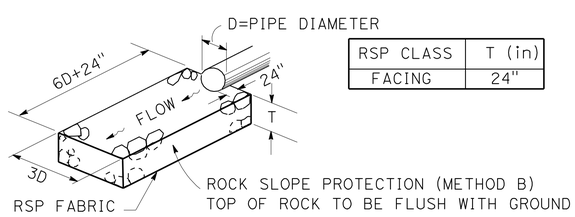


| RSP CLASS | T (in) |
|---|---|
| FACING | 24" |

## ROCK SLOPE PROTECTION
## DRAINAGE SYSTEM No.

| | | | | | | |
|---|---|---|---|---|---|---|
| 1 d | 6 e | 10 e | 19 e | 22 e | 25 d | 29 g | 32 i |
| 3 d | 7 d | 11 e | 20 c | 23 d | 26 d | 30 d | 33 e |
| 5 e | 9 h | 18 g | 21 d | 24 e | 27 g | 31 c | |

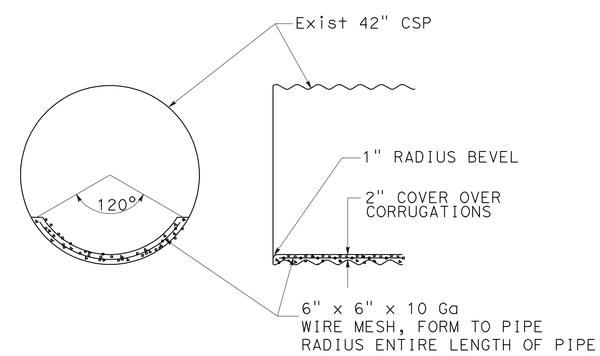


NOTES:

1. ROUND INVERT PAVING WITH 3" RADIUS OR 1:1 BEVEL AT INLET & OUTLET END OF PIPE.
2. WIRE MESH MAY BE OMITTED FOR PIPE DIAMETER LESS THAN 48"

## CONCRETE INVERT PAVING
## DRAINAGE SYSTEM No. 28 a

# DRAINAGE DETAILS

NO SCALE

DD-1

REVISED BY | DATE REVISED
P. STAFFORD | C. OLSON
CALCULATED-DESIGNED BY | CHECKED BY
FUNCTIONAL SUPERVISOR
C. OLSON

STATE OF CALIFORNIA - DEPARTMENT OF TRANSPORTATION
NORTH REGION
OFFICE OF DESIGN, SOUTH
DESIGN BRANCH S10

06:32 14-JUN-2010 trmikesl 13986uic001.dgn

LAST REVISION 03-25-10 | DATE PLOTTED => 14-JUN-2010 | TIME PLOTTED => 06:32

| Dist | COUNTY | ROUTE | POST MILES TOTAL PROJECT | SHEET No. | TOTAL SHEETS |
|---|---|---|---|---|---|
| 01 | Lak | 53 | 2.8/7.5 | 107 | 217 |

Patrice A. Stafford 3-25-10
REGISTERED CIVIL ENGINEER DATE

6-1-10
PLANS APPROVAL DATE

REGISTERED PROFESSIONAL ENGINEER
PATRICE A. STAFFORD
No. 61256
Exp. 6-30-11
CIVIL
STATE OF CALIFORNIA

THE STATE OF CALIFORNIA OR ITS OFFICERS OR AGENTS SHALL NOT BE RESPONSIBLE FOR THE ACCURACY OR COMPLETENESS OF SCANNED COPIES OF THIS PLAN SHEET.

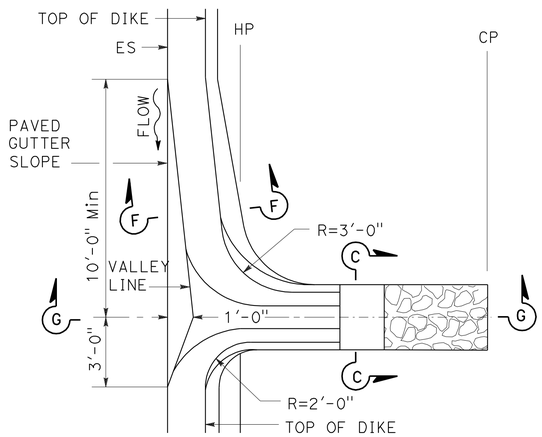


PLAN

**MOUNTABLE DIKE**

**HMA OVERSIDE DRAINS W/RSP**

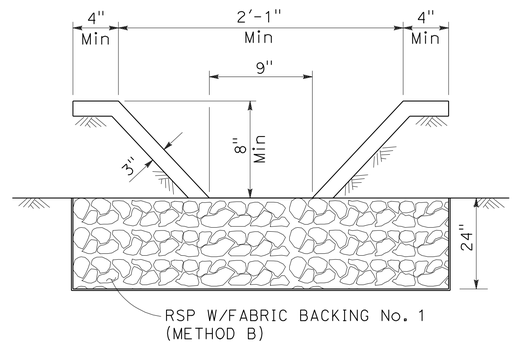


SECTION C-C

SEE NOTE 1

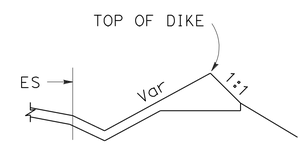


SECTION F-F

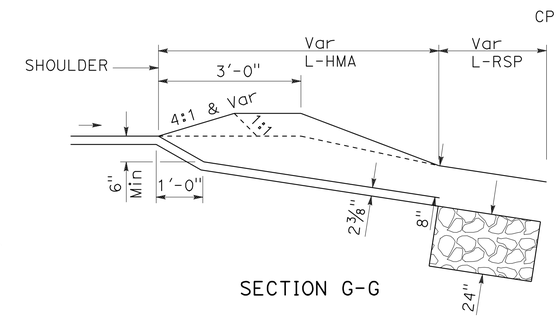


SECTION G-G

NOTE:

1. CROSS SECTION OF SLOPE DITCH MAY BE SEMICIRCULAR, VEE OR TRAPEZOIDAL.

# DRAINAGE DETAILS

NO SCALE

**DD-2**

| REVISED BY | DATE REVISED |
|---|---|
| | |

CALCULATED-DESIGNED BY: P. STAFFORD
CHECKED BY: C. OLSON
FUNCTIONAL SUPERVISOR: C. OLSON

STATE OF CALIFORNIA - DEPARTMENT OF TRANSPORTATION
Caltrans
NORTH REGION
OFFICE OF DESIGN, SOUTH
DESIGN BRANCH S10

06:33 14-JUN-2010 trmikesl 13986uic002.dgn

LAST REVISION 03-25-10 | DATE PLOTTED => 14-JUN-2010 | TIME PLOTTED => 06:33

| Dist | COUNTY | ROUTE | POST MILES TOTAL PROJECT | SHEET No. | TOTAL SHEETS |
|---|---|---|---|---|---|
| 01 | Lak | 53 | 2.8/7.5 | 108 | 217 |

Patrice A. Stafford 3-25-10
REGISTERED CIVIL ENGINEER DATE

6-1-10
PLANS APPROVAL DATE

REGISTERED PROFESSIONAL ENGINEER
PATRICE A. STAFFORD
No. 61256
Exp. 6-30-11
CIVIL
STATE OF CALIFORNIA

*THE STATE OF CALIFORNIA OR ITS OFFICERS OR AGENTS SHALL NOT BE RESPONSIBLE FOR THE ACCURACY OR COMPLETENESS OF SCANNED COPIES OF THIS PLAN SHEET.*

LEGEND

DITCH EXCAVATION

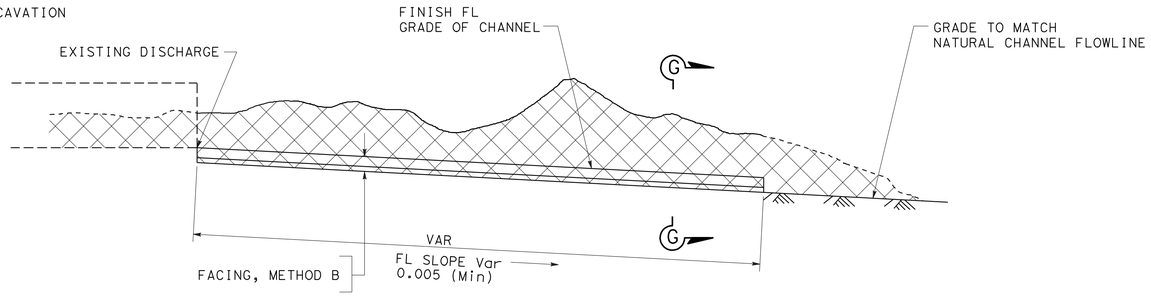


## DITCH EXCAVATION
## DRAINAGE SYSTEM No.

1 e, 10 d, 16 e, 20 e, 23 e, 27 d, 31 d
3 f, 11 f, 17 e, 21 e, 24 f, 29 h, 32 j
12 d, 15 g, 19 f, 22 f, 25 f, 26 e, 30 e, 33 h

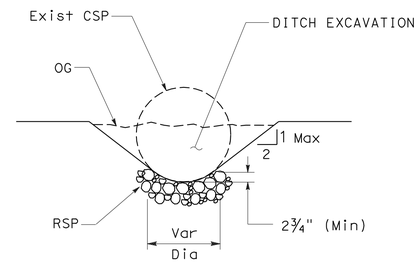


SECTION G-G

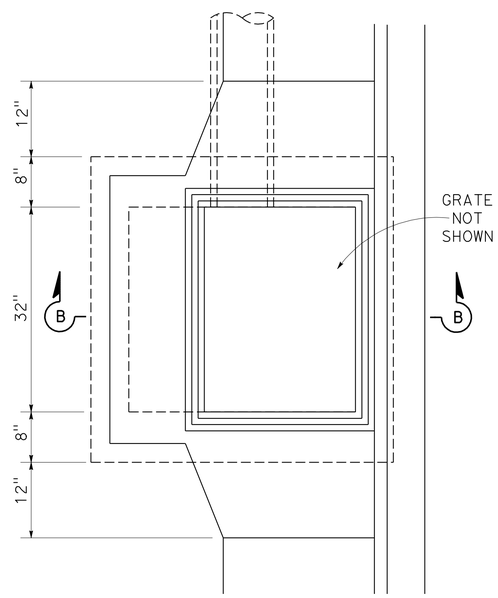


## ADJUST DI
## DRAINAGE SYSTEM No.

4 g h
8 a b

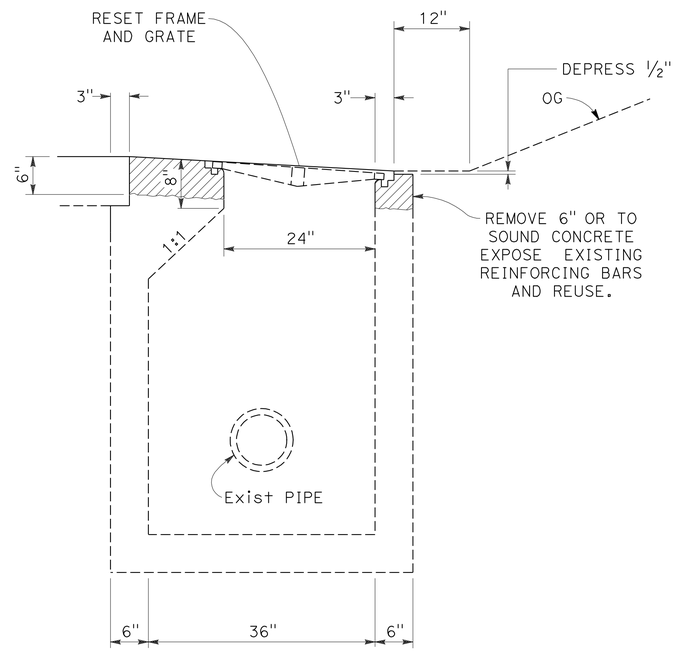


SECTION B-B

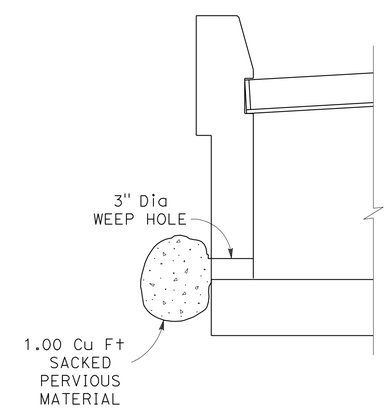


PLACE WEEPHOLE AT DI WALL
FARTHEST AWAY FROM ROADWAY.

## WEEPHOLE AT DI WALL

# DRAINAGE DETAILS
NO SCALE

DD-3

| REVISED BY | DATE REVISED |
|---|---|
| P. STAFFORD | |

| CALCULATED-DESIGNED BY | CHECKED BY |
|---|---|
| C. OLSON | |

FUNCTIONAL SUPERVISOR: C. OLSON

STATE OF CALIFORNIA - DEPARTMENT OF TRANSPORTATION
Caltrans
NORTH REGION
OFFICE OF DESIGN, SOUTH
DESIGN BRANCH S10

06:33 14-JUN-2010 trmikesl 13986uic003.dgn

LAST REVISION 03-25-10 | DATE PLOTTED => 14-JUN-2010 | TIME PLOTTED => 06:33

| Dist | COUNTY | ROUTE | POST MILES TOTAL PROJECT | SHEET No. | TOTAL SHEETS |
|---|---|---|---|---|---|
| 01 | Lak | 53 | 2.8/7.5 | 109 | 217 |

Patrice A. Stafford 3-25-10
REGISTERED CIVIL ENGINEER DATE

6-1-10
PLANS APPROVAL DATE

REGISTERED PROFESSIONAL ENGINEER
PATRICE A. STAFFORD
No. 61256
Exp. 6-30-11
CIVIL
STATE OF CALIFORNIA

*THE STATE OF CALIFORNIA OR ITS OFFICERS OR AGENTS SHALL NOT BE RESPONSIBLE FOR THE ACCURACY OR COMPLETENESS OF SCANNED COPIES OF THIS PLAN SHEET.*

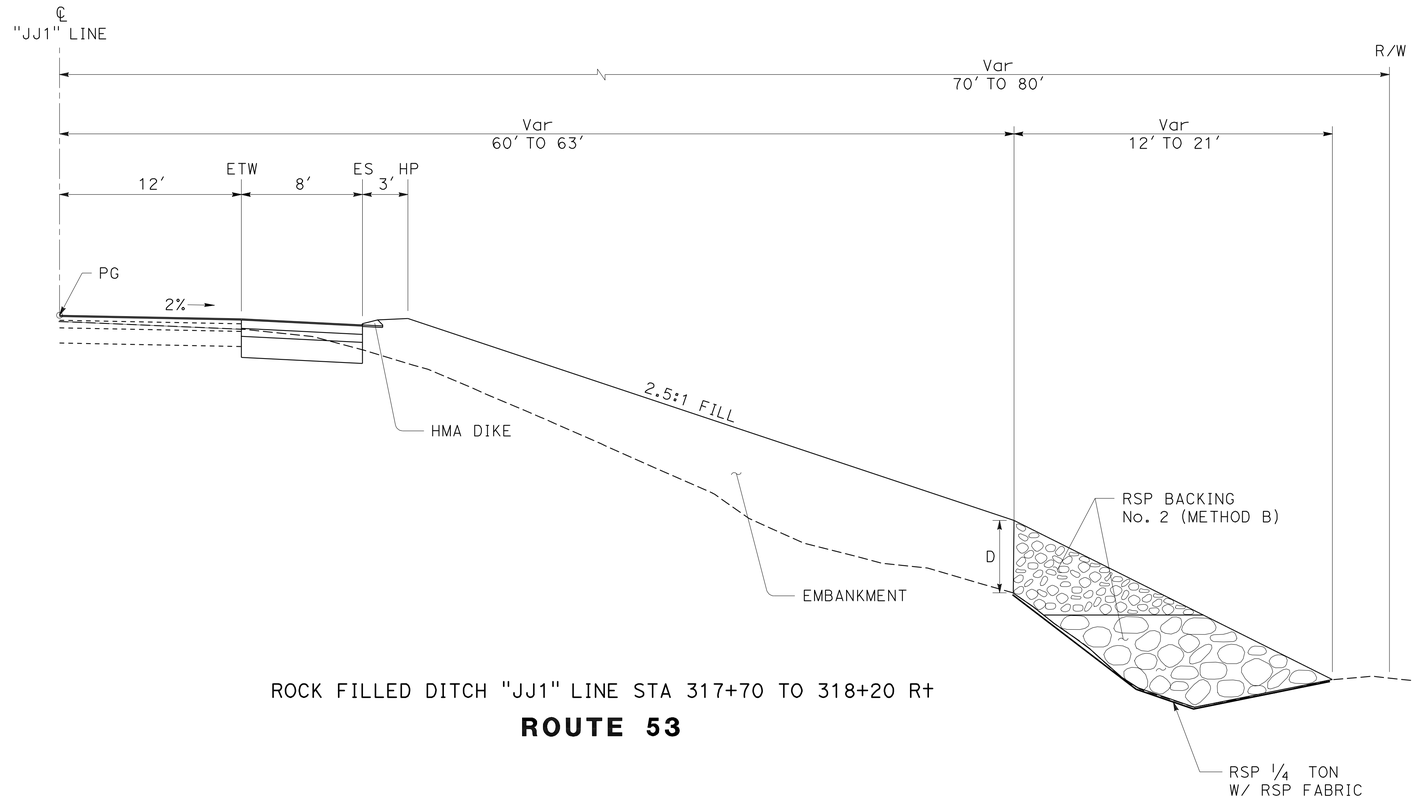


ROCK FILLED DITCH "JJ1" LINE STA 317+70 TO 318+20 Rt

**ROUTE 53**

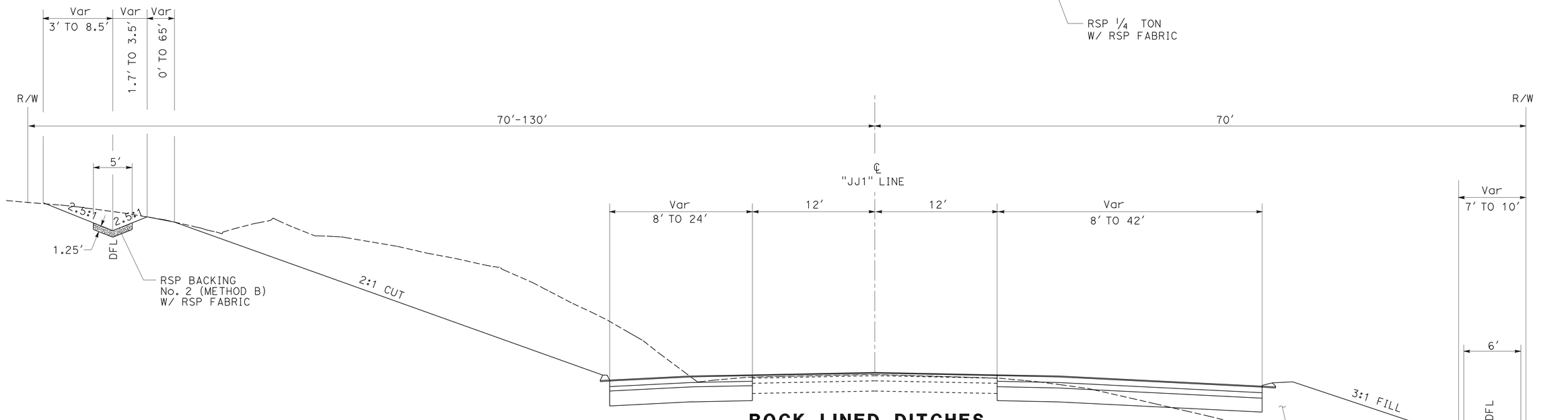


**ROCK LINED DITCHES**

"JJ1" Sts 266+00 TO 277+25 Lt
"JJ1" Sts 272+50 TO 277+50 Rt
"JJ1" Sts 362+00 TO 365+05 Lt

**ROUTE 53**

# DRAINAGE DETAILS

NO SCALE

**DD-4**

| CALCULATED-DESIGNED BY | P. STAFFORD | REVISED BY |
|---|---|---|
| CHECKED BY | C. OLSON | DATE REVISED |
| FUNCTIONAL SUPERVISOR | C. OLSON | |

STATE OF CALIFORNIA - DEPARTMENT OF TRANSPORTATION
Caltrans
NORTH REGION
OFFICE OF DESIGN, SOUTH
DESIGN BRANCH S10

06:33 14-JUN-2010 trmikesl 13986uic004.dgn

LAST REVISION 03-25-10 | DATE PLOTTED => 14-JUN-2010 | TIME PLOTTED => 06:33

| Dist | COUNTY | ROUTE | POST MILES TOTAL PROJECT | SHEET No. | TOTAL SHEETS |
|---|---|---|---|---|---|
| 01 | Lak | 53 | 2.8/7.5 | 110 | 217 |

Patrice A. Stafford 3-25-10
REGISTERED CIVIL ENGINEER DATE

6-1-10
PLANS APPROVAL DATE

REGISTERED PROFESSIONAL ENGINEER
PATRICE A. STAFFORD
No. 61256
Exp. 6-30-11
CIVIL
STATE OF CALIFORNIA

*THE STATE OF CALIFORNIA OR ITS OFFICERS OR AGENTS SHALL NOT BE RESPONSIBLE FOR THE ACCURACY OR COMPLETENESS OF SCANNED COPIES OF THIS PLAN SHEET.*

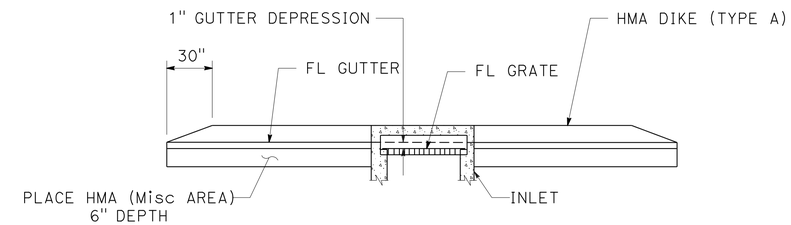


SECTION A-A

TYPE GO INLET

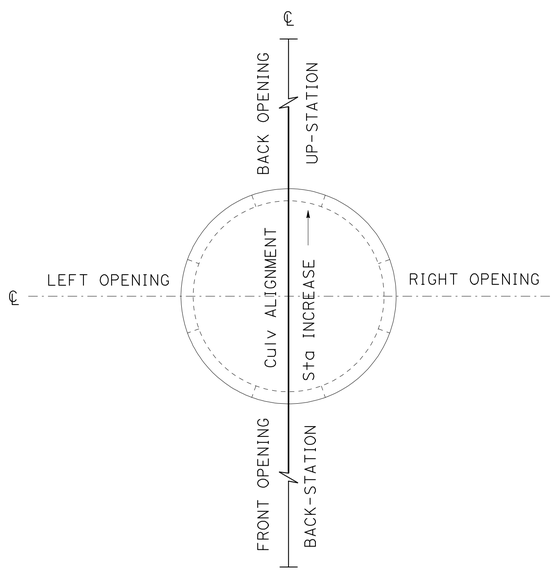


PLAN

**INLET (TYPE OMP) SIDE OPENINGS**

**DRAINAGE SYSTEM No.**

2 (f) 4 (e)

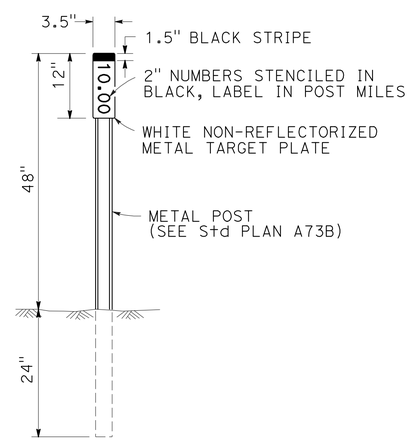


**MARKER (CULVERT)**

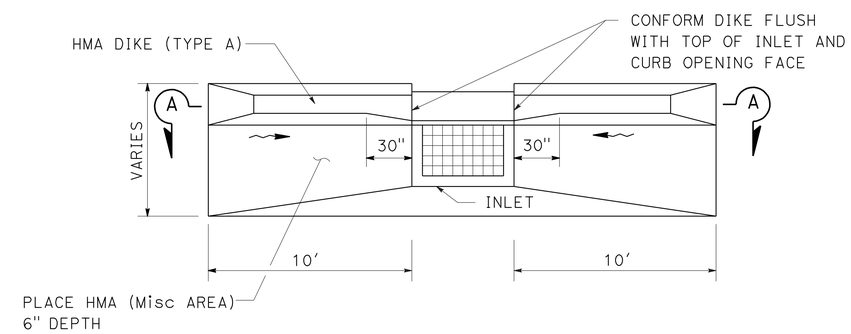


PLAN

**PAVED APRON**

**DRAINAGE SYSTEM No.**

9 (g) 18 (f)

# DRAINAGE DETAILS

NO SCALE

**DD-5**

STATE OF CALIFORNIA - DEPARTMENT OF TRANSPORTATION
Caltrans
NORTH REGION
OFFICE OF DESIGN, SOUTH
DESIGN BRANCH S10

CALCULATED-DESIGNED BY: P. STAFFORD
CHECKED BY: C. OLSON
FUNCTIONAL SUPERVISOR: C. OLSON
REVISED BY
DATE REVISED

06:33 14-JUN-2010 trmikesl 13986uic005.dgn

LAST REVISION 03-25-10
DATE PLOTTED => 14-JUN-2010
TIME PLOTTED => 06:33

| Dist | COUNTY | ROUTE | POST MILES TOTAL PROJECT | SHEET No. | TOTAL SHEETS |
|---|---|---|---|---|---|
| 01 | Lak | 53 | 2.8/7.5 | 111 | 217 |

Patrice A. Stafford 3-25-10
REGISTERED CIVIL ENGINEER DATE

6-1-10
PLANS APPROVAL DATE

REGISTERED PROFESSIONAL ENGINEER
PATRICE A. STAFFORD
No. 61256
Exp. 6-30-11
CIVIL
STATE OF CALIFORNIA

*THE STATE OF CALIFORNIA OR ITS OFFICERS OR AGENTS SHALL NOT BE RESPONSIBLE FOR THE ACCURACY OR COMPLETENESS OF SCANNED COPIES OF THIS PLAN SHEET.*

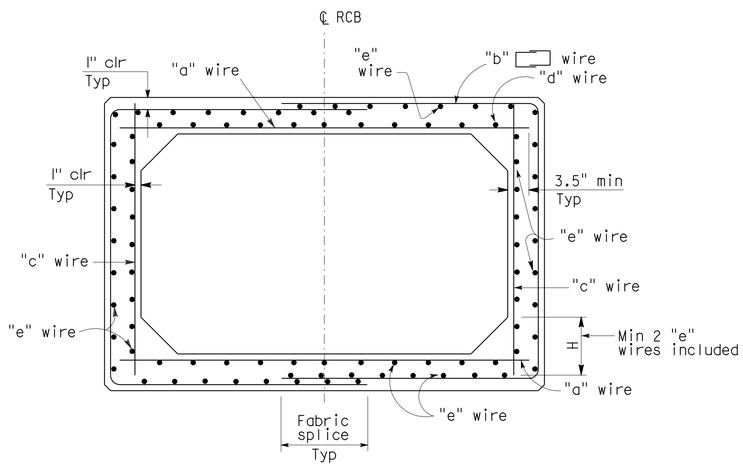


TYPICAL SECTION - SPANS 4'-0" THRU 12'-0"

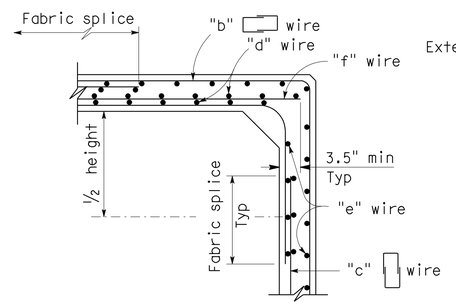


ALTERNATIVE DETAILING OPTION

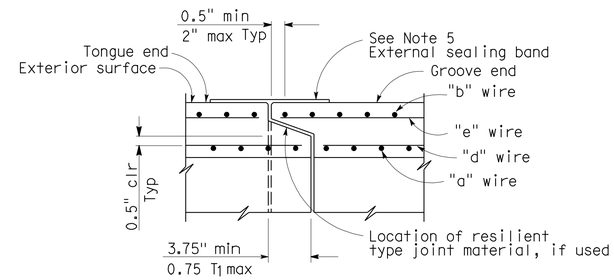


END JOINT DETAIL

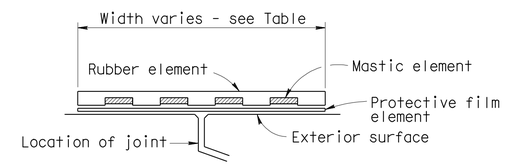


EXTERNAL SEALING BAND SCHEMATIC

**NOTES:**

1. The inside and outside surfaces of the RCB roof shall be marked "TOP".
2. H minimum shall equal the wall thickness. H maximum shall be 8" for spans through 8' and 14" for spans over 8'.
3. Quantities are approximate and for design purposes only.
4. For design and details not shown see sheet DD-7.
5. For external sealing band applications see sheet DD-8.

| AASHTO STANDARD SHAPE | | | M259 | | | | | | M273 | | | | | | M259 | | | | | | | | M273 | | | | | | | | M259 | | | | | | | | M273 | | | | | | | |
|---|---|---|---|---|---|---|---|---|---|---|---|---|---|---|---|---|---|---|---|---|---|---|---|---|---|---|---|---|---|---|---|---|---|---|---|---|---|---|---|---|---|---|---|---|---|---|
| SPAN (ft) | | | 4 | | | | | | 4 | | | | | | 5 | | | | | | | | 5 | | | | | | | | 6 | | | | | | | | 6 | | | | | | | |
| HEIGHT (ft) | | | 2 | | 3 | | 4 | | 2 | | 3 | | 4 | | 2 | | 3 | | 4 | | 5 | | 2 | | 3 | | 4 | | 5 | | 3 | | 4 | | 5 | | 6 | | 3 | | 4 | | 5 | | 6 | |
| Maximum earth cover (ft) | | | 10 | 20 | 10 | 20 | 10 | 20 | 10 | 20 | 10 | 20 | 10 | 20 | 10 | 20 | 10 | 20 | 10 | 20 | 10 | 20 | 10 | 20 | 10 | 20 | 10 | 20 | 10 | 20 | 10 | 20 | 10 | 20 | 10 | 20 | 10 | 20 | 10 | 20 | 10 | 20 | 10 | 20 | 10 | 20 |
| Concrete (inch) | Roof | $T_1$ | 5 | 5 | 5 | 5 | 5 | 5 | 7.5 | 7.5 | 7.5 | 7.5 | 7.5 | 7.5 | 6 | 6 | 6 | 6 | 6 | 6 | 6 | 6 | 8 | 8 | 8 | 8 | 8 | 8 | 8 | 8 | 7 | 7 | 7 | 7 | 7 | 7 | 7 | 7 | 8 | 8 | 8 | 8 | 8 | 8 | 8 | 8 |
| | Side wall | $T_2$ | 5 | 5 | 5 | 5 | 5 | 5 | 5 | 5 | 5 | 5 | 5 | 5 | 6 | 6 | 6 | 6 | 6 | 6 | 6 | 6 | 6 | 6 | 6 | 6 | 6 | 6 | 6 | 6 | 7 | 7 | 7 | 7 | 7 | 7 | 7 | 7 | 7 | 7 | 7 | 7 | 7 | 7 | 7 | 7 |
| | Invert | $T_3$ | 5 | 5 | 5 | 5 | 5 | 5 | 6 | 6 | 6 | 6 | 6 | 6 | 6 | 6 | 6 | 6 | 6 | 6 | 6 | 6 | 7 | 7 | 7 | 7 | 7 | 7 | 7 | 7 | 7 | 7 | 7 | 7 | 7 | 7 | 7 | 7 | 7 | 7 | 7 | 7 | 7 | 7 | 7 | 7 |
| Minimum welded wire fabric Reinf areas (Square inch/LF) | | "a" | .41 | .41 | .43 | .43 | .45 | .45 | .29 | .29 | .31 | .31 | .31 | .31 | .38 | .38 | .41 | .41 | .42 | .42 | .43 | .43 | .31 | .31 | .33 | .33 | .34 | .34 | .34 | .34 | .39 | .39 | .41 | .41 | .42 | .42 | .42 | .42 | .36 | .38 | .37 | .40 | .38 | .40 | .38 | .39 |
| | | "b" | .36 | .25 | .32 | .27 | .32 | .35 | .14 | .23 | .15 | .28 | .20 | .37 | .34 | .30 | .31 | .31 | .30 | .35 | .30 | .43 | .18 | .27 | .16 | .30 | .19 | .35 | .25 | .45 | .30 | .36 | .29 | .38 | .29 | .44 | .35 | .52 | .23 | .36 | .25 | .39 | .29 | .44 | .35 | .52 |
| | | "c" | .13 | .13 | .13 | .13 | .13 | .18 | .13 | .13 | .13 | .13 | .13 | .20 | .13 | .13 | .13 | .13 | .13 | .13 | .14 | .23 | .13 | .13 | .13 | .13 | .13 | .13 | .14 | .25 | .14 | .14 | .14 | .14 | .14 | .14 | .17 | .29 | .14 | .14 | .14 | .14 | .14 | .14 | .18 | .29 |
| | | "d" | .21 | .13 | .22 | .13 | .23 | .13 | .15 | .13 | .16 | .13 | .16 | .13 | .17 | .13 | .19 | .13 | .19 | .13 | .20 | .13 | .14 | .13 | .15 | .13 | .16 | .13 | .16 | .13 | .16 | .13 | .17 | .13 | .18 | .13 | .18 | .13 | .15 | .13 | .16 | .13 | .16 | .13 | .16 | .13 |
| | | "e" | .13 | .13 | .13 | .13 | .13 | .13 | .13 | .13 | .13 | .13 | .13 | .13 | .13 | .13 | .13 | .13 | .13 | .13 | .13 | .13 | .13 | .13 | .13 | .13 | .13 | .13 | .13 | .13 | .13 | .13 | .13 | .13 | .13 | .13 | .13 | .13 | .13 | .13 | .13 | .13 | .13 | .13 | .13 | .13 |
| | | "f" | .28 | .28 | .30 | .30 | .32 | .27 | .16 | .16 | .18 | .18 | .18 | .11 | .25 | .25 | .28 | .28 | .29 | .29 | .29 | .20 | .18 | .18 | .20 | .20 | .21 | .21 | .20 | .09 | .25 | .25 | .27 | .27 | .28 | .28 | .25 | .13 | .22 | .24 | .23 | .26 | .24 | .26 | .20 | .10 |
| * Quantity | Conc | CY/LF | .22 | | .26 | | .29 | | .28 | | .31 | | .34 | | .32 | | .35 | | .39 | | .43 | | .37 | | .41 | | .44 | | .48 | | .47 | | .51 | | .55 | | .59 | | .49 | | .53 | | .57 | | .62 | |
| | Reinf | LB/LF | 53 | 45 | 56 | 53 | 62 | 63 | 35 | 40 | 40 | 48 | 47 | 61 | 56 | 52 | 61 | 58 | 65 | 67 | 71 | 83 | 42 | 47 | 45 | 55 | 52 | 64 | 62 | 82 | 67 | 71 | 72 | 81 | 78 | 90 | 90 | 110 | 60 | 72 | 67 | 81 | 75 | 89 | 88 | 108 |

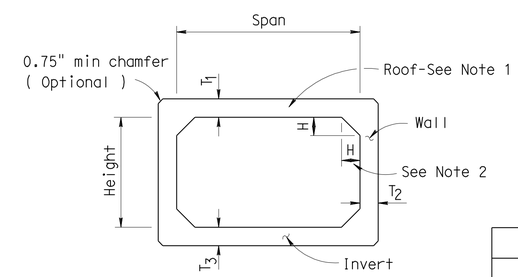


SCHEMATIC

| TABLE | |
|---|---|
| SPAN (ft) | EXTERNAL SEALING BAND WIDTH (inch) |
| 4-6 | 9 |
| 7-8 | 11 |
| 10-12 | 13 |

| AASHTO STANDARD SHAPE | | | M259 AND M273 | | | | | | | | | | M259 AND M273 | | | | | | | | | | M259 AND M273 | | | | | | | | | | M259 AND M273 | | | | | | | | | | | | | |
|---|---|---|---|---|---|---|---|---|---|---|---|---|---|---|---|---|---|---|---|---|---|---|---|---|---|---|---|---|---|---|---|---|---|---|---|---|---|---|---|---|---|---|---|---|---|---|
| SPAN (ft) | | | 7 | | | | | | | | | | 8 | | | | | | | | | | 10 | | | | | | | | | | | | 12 | | | | | | | | | | | |
| HEIGHT (ft) | | | 3 | | 4 | | 5 | | 6 | | 7 | | 4 | | 5 | | 6 | | 7 | | 8 | | 5 | | 6 | | 7 | | 8 | | 9 | | 10 | | 6 | | 7 | | 8 | | 9 | | 10 | | 11 | | 12 | |
| Maximum earth cover (ft) | | | 10 | 20 | 10 | 20 | 10 | 20 | 10 | 20 | 10 | 20 | 10 | 20 | 10 | 20 | 10 | 20 | 10 | 20 | 10 | 20 | 10 | 20 | 10 | 20 | 10 | 20 | 10 | 20 | 10 | 20 | 10 | 20 | 10 | 20 | 10 | 20 | 10 | 20 | 10 | 20 | 10 | 20 | 10 | 20 |
| Concrete (Inch) | | $T_1=T_2=T_3$ | 8 | 8 | 8 | 8 | 8 | 8 | 8 | 8 | 8 | 8 | 8 | 8 | 8 | 8 | 8 | 8 | 8 | 8 | 8 | 8 | 10 | 10 | 10 | 10 | 10 | 10 | 10 | 10 | 10 | 10 | 10 | 10 | 12 | 12 | 12 | 12 | 12 | 12 | 12 | 12 | 12 | 12 | 12 | 12 |
| Minimum welded wire fabric Reinf areas (Square inch/LF) | | "a" | .39 | .44 | .40 | .47 | .42 | .48 | .42 | .48 | .43 | .48 | .45 | .59 | .47 | .61 | .48 | .62 | .48 | .62 | .49 | .61 | .45 | .71 | .46 | .74 | .46 | .75 | .47 | .76 | .47 | .75 | .47 | .74 | .51 | .85 | .52 | .87 | .53 | .89 | .54 | .90 | .54 | .90 | .54 | .89 | .53 | .88 |
| | | "b" | .31 | .42 | .30 | .43 | .30 | .47 | .35 | .53 | .42 | .62 | .34 | .55 | .37 | .58 | .41 | .63 | .47 | .71 | .55 | .82 | .45 | .67 | .47 | .70 | .50 | .74 | .55 | .81 | .62 | .90 | .71 | 1.02 | .53 | .80 | .55 | .83 | .58 | .87 | .63 | .93 | .69 | 1.01 | .77 | 1.12 | .86 | 1.24 |
| | | "c" | .16 | .16 | .16 | .16 | .16 | .16 | .16 | .18 | .22 | .35 | .16 | .16 | .16 | .16 | .16 | .16 | .18 | .27 | .29 | .47 | .21 | .21 | .21 | .21 | .21 | .21 | .21 | .21 | .27 | .40 | .40 | .60 | .25 | .25 | .25 | .25 | .25 | .25 | .25 | .25 | .25 | .35 | .38 | .54 | .51 | .76 |
| | | "d" | .15 | .13 | .16 | .13 | .16 | .13 | .16 | .13 | .16 | .13 | .16 | .13 | .17 | .13 | .17 | .13 | .17 | .13 | .18 | .13 | .15 | .13 | .15 | .13 | .15 | .13 | .15 | .13 | .15 | .13 | .15 | .13 | .15 | .13 | .15 | .13 | .16 | .13 | .16 | .13 | .16 | .13 | .16 | .13 | .16 | .13 |
| | | "e" | .13 | .13 | .13 | .13 | .13 | .13 | .13 | .13 | .13 | .13 | .13 | .13 | .13 | .13 | .13 | .13 | .13 | .13 | .13 | .13 | .13 | .13 | .13 | .13 | .13 | .13 | .13 | .13 | .13 | .13 | .13 | .13 | .13 | .13 | .13 | .13 | .13 | .13 | .13 | .13 | .13 | .13 | .13 | .13 | .13 | .13 |
| | | "f" | .23 | .28 | .24 | .31 | .26 | .32 | .26 | .30 | .21 | .13 | .29 | .43 | .31 | .45 | .32 | .46 | .30 | .35 | .20 | .14 | .24 | .50 | .25 | .53 | .25 | .54 | .26 | .55 | .20 | .35 | .07 | .14 | .26 | .60 | .27 | .62 | .28 | .64 | .29 | .65 | .29 | .55 | .16 | .35 | .02 | .12 |
| * Quantity | Conc | | .59 | | .64 | | .69 | | .74 | | .79 | | .69 | | .74 | | .79 | | .84 | | .89 | | 1.08 | | 1.14 | | 1.20 | | 1.27 | | 1.33 | | 1.39 | | 1.56 | | 1.63 | | 1.70 | | 1.78 | | 1.85 | | 1.93 | | 2.00 | |
| | Reinf | LB/LF | 77 | 89 | 82 | 97 | 84 | 103 | 98 | 121 | 115 | 146 | 96 | 125 | 106 | 140 | 117 | 149 | 131 | 171 | 156 | 205 | 133 | 179 | 142 | 193 | 153 | 206 | 168 | 227 | 189 | 294 | 221 | 304 | 173 | 243 | 184 | 259 | 198 | 276 | 215 | 297 | 233 | 328 | 265 | 372 | 302 | 425 |

* See Note 3

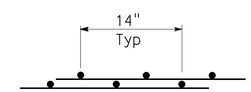


FABRIC SPLICE DETAIL

| DESIGN BEARING PRESSURE TSF | | |
|---|---|---|
| SPAN \ COVER | 10' | 20' |
| 4' thru 8' | 1.1 | 2.0 |
| 10' thru 12' | 1.3 | 2.1 |

# DRAINAGE DETAILS

NO SCALE

**DD-6**

| REVISED BY | DATE REVISED |
|---|---|
| | |

| CALCULATED-DESIGNED BY | CHECKED BY |
|---|---|
| P. STAFFORD | C. OLSON |

FUNCTIONAL SUPERVISOR: C. OLSON

STATE OF CALIFORNIA - DEPARTMENT OF TRANSPORTATION
NORTH REGION
OFFICE OF DESIGN, SOUTH
DESIGN BRANCH S10

06133 14-JUN-2010 trmikesl 13986uic006.dgn

LAST REVISION DATE PLOTTED => 14-JUN-2010 TIME PLOTTED => 06:33

| Dist | COUNTY | ROUTE | POST MILES TOTAL PROJECT | SHEET No. | TOTAL SHEETS |
|---|---|---|---|---|---|
| 01 | Lak | 53 | 2.8/7.5 | 112 | 217 |

Patrice A. Stafford 3-25-10
REGISTERED CIVIL ENGINEER DATE

6-1-10
PLANS APPROVAL DATE

REGISTERED PROFESSIONAL ENGINEER
PATRICE A. STAFFORD
No. 61256
Exp. 6-30-11
CIVIL
STATE OF CALIFORNIA

*THE STATE OF CALIFORNIA OR ITS OFFICERS OR AGENTS SHALL NOT BE RESPONSIBLE FOR THE ACCURACY OR COMPLETENESS OF SCANNED COPIES OF THIS PLAN SHEET.*

## DESIGN NOTES

Specifications:

Design: Bridge Design Specifications (1983 AASHTO Specifications with revisions by Caltrans). Depth of cover is assumed to be uniform.

Earth Load:

Earth pressures for two conditions:
-140 lb/cf vert, 42 lb/cf horiz
-140 lb/cf vert, 140 lb/cf horiz

Unit Stresses:

f'c = 5.0 KSI
f'y = 65.0 KSI for weld wire fabric
n = 7

Shear:

Maximum allowable shear, $v=3.5\sqrt{f'c,PSI}$

Exclusion:

Axial loading on the members has not been considered.

Earthwork:

See sheet DD-8.

## GENERAL NOTES

Designation:

Standard single or multiple precast box culverts are shown on the plans as span times height with maximum cover over roof thus: 8' x 5' RCB with 10'-0" or double 10' x 5' RCB with 20'-0", followed by alternatives.

Alternatives:

Single cell:

Standard dimensions of AASHTO Material Specification 'M259' or 'M273'.

Multiple Cell:

Constructed by placing single cells adjacent to each other. Inlet and outlet ends of culvert will be rounded unless square ends are designated. Parapet will be shown unless designated in plans. Such designation may be different for inlet and outlet ends.

Limitations:

Where the overfill is less than 12", Precast RCB culverts are not to be used. Precast RCB culverts are not to be used in siphon or pressurized installations unless appropriate "watertight" jointing is provided.

Special Reinforcement Coverage:

Precast RCB culvert standard details are not to be used in a corrosive environment or where there is a severe abrasive flow condition or freeze-thaw locations.

Special design:

Required for culvert with different conditions, or loads or design bearing pressures greater than those given on these plans. Required for culverts where end details need higher skew angles or higher parapets or barrier sections.

## CONSTRUCTION NOTES

Cutoff Walls:

4'-0" Cutoff walls are to be provided at inlet and/or outlet unless channel is lined and unless otherwise shown. These walls are to be extended if scour conditions warrant. See Standard Plans D84, D85 and D86A.

Wingwalls:

Wingwalls shall be cast-in-place and shall conform to standard plan details for box culvert wingwalls. See Standard Plan D84, D85 and D86A.

Earthwork:

See sheet DD-8.

Construction Loads:

Strutting may be required near temporary ends. For construction loads on culverts, See Standard Plan D88.

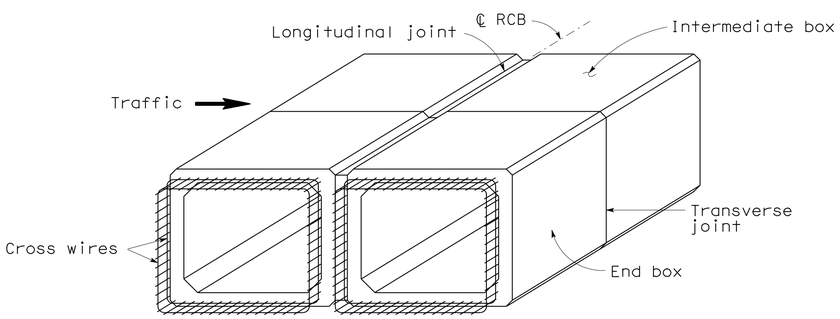


## PRECAST RCB TERMINOLOGY

Note: Inner and outer reinforcement to be exposed as required to tie to cast -in-place construction. A minimum of two cross wires shall be exposed on all sides.

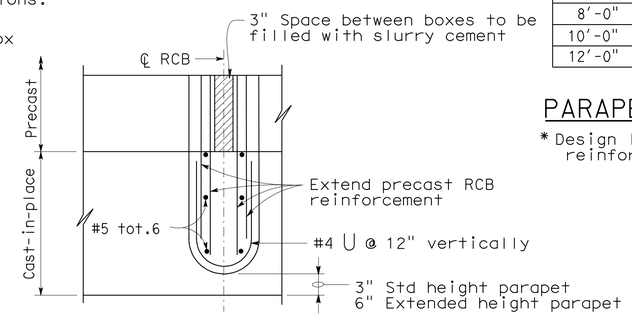


## PARTIAL PLAN INTERIOR WALL MULTICELL CULVERT

| Parapet "P" Bars | | | |
|---|---|---|---|
| Span \ Skew Angle | 0° to 15° | 16° to 30° | 31° to 45° |
| 4'-0" | #5 | #5 | #5 |
| 6'-0" | #5 | #5 | * |
| 8'-0" | #5 | #5 | * |
| 10'-0" | #5 | * | * |
| 12'-0" | #6 | * | * |

## PARAPET REINFORCEMENT

* Design limited by skew of precast reinforced concrete box section

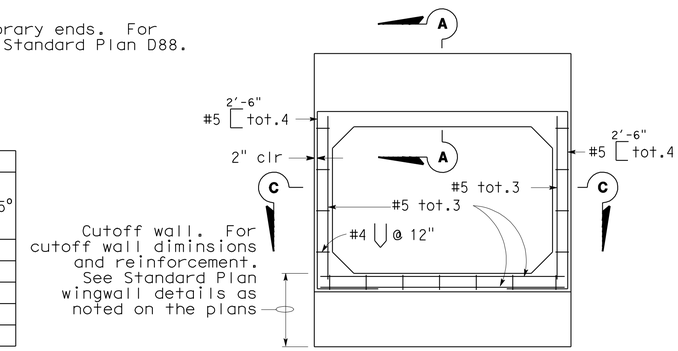


## CAST-IN-PLACE END ELEVATION

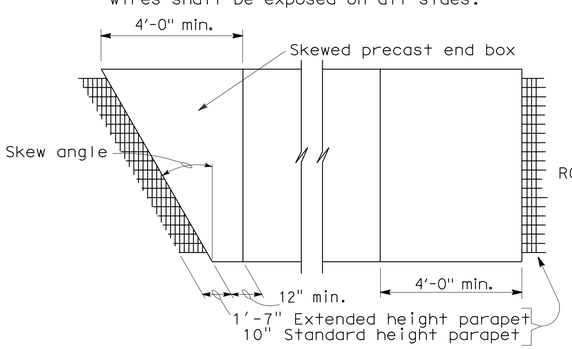


## PARTIAL PLAN VIEW

For illustrative purposes only.
For correct skew direction see plans.

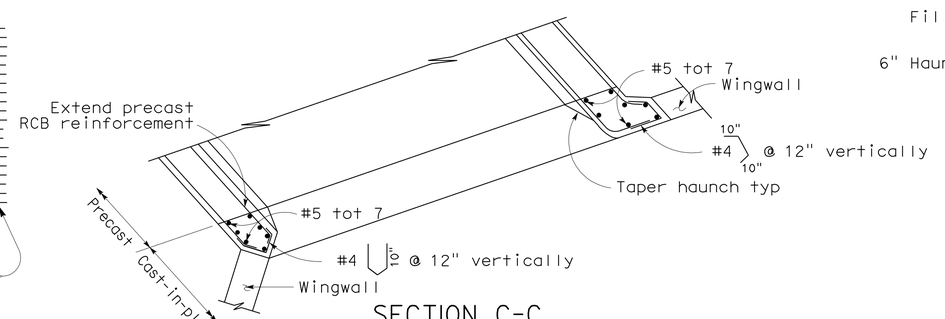


## SECTION C-C

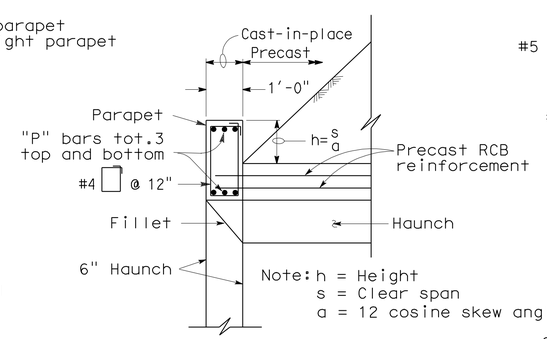


## SECTION A-A
(Standard Height Parapet)

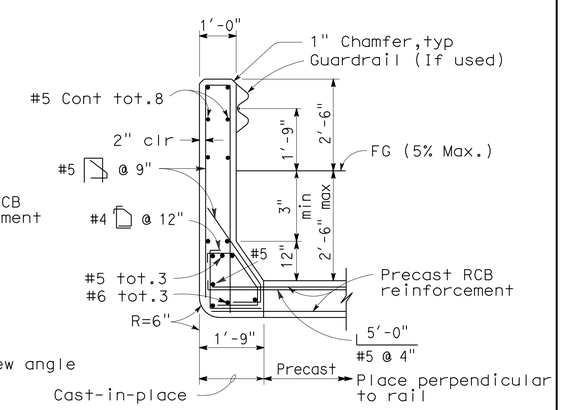


## SECTION A-A
(Extended Height Parapet)

## TYPICAL CULVERT END DETAILS

For wall and invert reinforcement not shown, See "End Elevation" detail

# DRAINAGE DETAILS
NO SCALE

**DD-7**

REVISED BY | DATE REVISED
P. STAFFORD | C. OLSON
CALCULATED-DESIGNED BY | CHECKED BY
FUNCTIONAL SUPERVISOR
C. OLSON

STATE OF CALIFORNIA - DEPARTMENT OF TRANSPORTATION
NORTH REGION
OFFICE OF DESIGN, SOUTH
DESIGN BRANCH S10

Caltrans

06:33 14-JUN-2010 trmikesl 13986uic007.dgn

LAST REVISION | DATE PLOTTED => 14-JUN-2010 | TIME PLOTTED => 06:33

| Dist | COUNTY | ROUTE | POST MILES TOTAL PROJECT | SHEET No. | TOTAL SHEETS |
|---|---|---|---|---|---|
| 01 | Lak | 53 | 2.8/7.5 | 113 | 217 |

Patrice A. Stafford 3-25-10
REGISTERED CIVIL ENGINEER DATE

6-1-10
PLANS APPROVAL DATE

REGISTERED PROFESSIONAL ENGINEER
PATRICE A. STAFFORD
No. 61256
Exp. 6-30-11
CIVIL
STATE OF CALIFORNIA

*THE STATE OF CALIFORNIA OR ITS OFFICERS OR AGENTS SHALL NOT BE RESPONSIBLE FOR THE ACCURACY OR COMPLETENESS OF SCANNED COPIES OF THIS PLAN SHEET.*

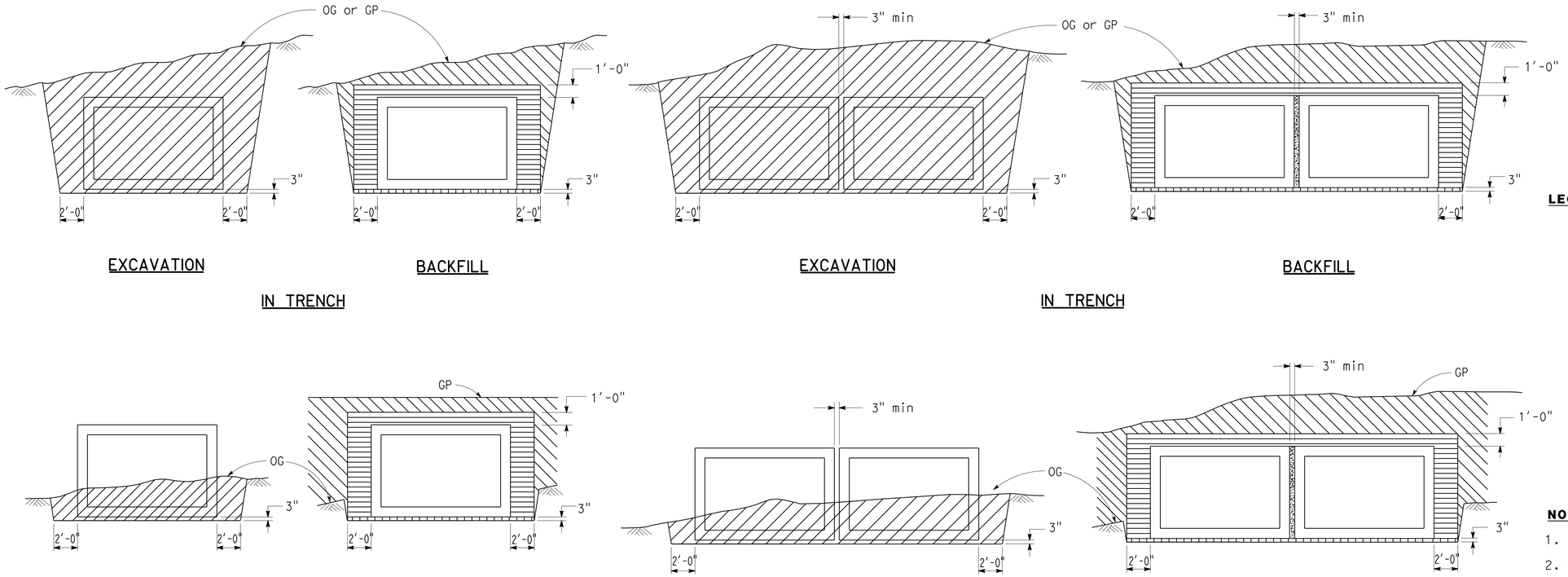


FILL HEIGHT GREATER THAN 2'-0"

**LEGEND:**

- Structure excavation (Culvert)
- Structure backfill (Culvert) 95% relative compaction
- Roadway embankment
- Slurry cement backfill
- Sand bedding ( Culvert )
- Roadway structural section
- Original ground

**NOTES:**

1. Slope or shore excavation sides as necessary.
2. Dimensions shown are minimum.
3. Method 2 and 3 for single or multiple boxes requires an approved external sealing band. See sheet DD-6.
4. Construction of Roadway Structural Section in Method 2 or Method 3 shall not disturb the external sealing band installation.

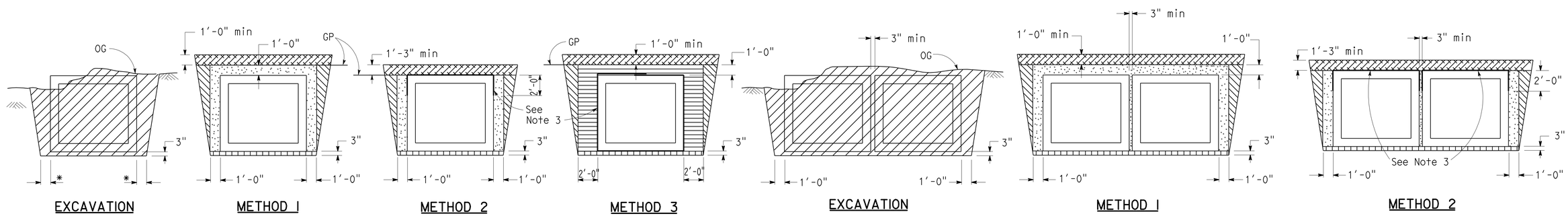


FILL HEIGHT 2'-0" OR LESS

* 1'-0" Where Method 1 or 2 Backfill is used.
2'-0" Where Method 3 Backfill is used.

STANDARD DRAWING

# DRAINAGE DETAILS

NO SCALE

**DD-8**

STATE OF CALIFORNIA - DEPARTMENT OF TRANSPORTATION
NORTH REGION
OFFICE OF DESIGN, SOUTH
DESIGN BRANCH S10

FUNCTIONAL SUPERVISOR: C. OLSON
CALCULATED-DESIGNED BY: P. STAFFORD
CHECKED BY: C. OLSON
REVISED BY
DATE REVISED

06:33 14-JUN-2010 trmikesl 13986uic008.dgn

LAST REVISION
DATE PLOTTED => 14-JUN-2010
TIME PLOTTED => 06:33

| Dist | COUNTY | ROUTE | POST MILES TOTAL PROJECT | SHEET No. | TOTAL SHEETS |
|---|---|---|---|---|---|
| 01 | Lak | 53 | 2.8/7.5 | 114 | 217 |

Patrice A. Stafford 3-25-10
REGISTERED CIVIL ENGINEER DATE

6-1-10
PLANS APPROVAL DATE

REGISTERED PROFESSIONAL ENGINEER
PATRICE A. STAFFORD
No. 61256
Exp. 6-30-11
CIVIL
STATE OF CALIFORNIA

*THE STATE OF CALIFORNIA OR ITS OFFICERS OR AGENTS SHALL NOT BE RESPONSIBLE FOR THE ACCURACY OR COMPLETENESS OF SCANNED COPIES OF THIS PLAN SHEET.*

# DRAINAGE QUANTITIES

| DRAINAGE PLAN SHEET No. | POST MILE | DRAINAGE SYSTEM No. ⬡ | DRAINAGE UNIT ◯ | REMOVE CULVERT LF | REMOVE HEADWALL EA | REMOVE WINGWALL EA | ADJUST INLET EA | MINOR Conc (MINOR STRUCTURE) CY | MINOR Conc (Misc Const) CY | PRECAST Conc BOX CULVERT (6'X4') LF | STRUCTURAL CONCRETE BOX CULVERT CY | HEIGHT OF INLET (N) LF | CONCRETE INVERT PAVING CY | ALTERNATIVE PIPE CULVERT 18" LF | ALTERNATIVE PIPE CULVERT 24" LF | ALTERNATIVE PIPE CULVERT 36" LF | ALTERNATIVE PIPE CULVERT 42" LF | 12" CSP (.079" THICK) LF | REMOVE FLARED END SECTION EA | ALTERNATIVE FLARED END SECTION 18" EA | ALTERNATIVE FLARED END SECTION 24" EA | ALTERNATIVE FLARED END SECTION 30" EA | ALTERNATIVE FLARED END SECTION 36" EA | ALTERNATIVE FLARED END SECTION 42" EA | ROCK SLOPE PROTECTION (BACKING No. 1, METHOD B) CY | ROCK SLOPE PROTECTION FABRIC SQYD | MISCELLANEOUS IRON AND STEEL LB | BAR REINFORCING STEEL LB | DESCRIPTION | STATION | DRAINAGE UNIT ◯ | DRAINAGE SYSTEM No. ⬡ | POST MILE | DRAINAGE PLAN SHEET No. |
|---|---|---|---|---|---|---|---|---|---|---|---|---|---|---|---|---|---|---|---|---|---|---|---|---|---|---|---|---|---|---|---|---|---|---|
| D-1 | 2.83 | 1 | a | | | | | | | | | | | | | | | | | | | | | | | | | | | 154+50.02 | a | 1 | 2.83 | D-1 |
| | | | b | | | | | | | | | | | | | | | | 1 | | | | | | | | | | REMOVE FES | | b | | | |
| | | | c | | | | | | | | | | | | | | | | | 1 | | | | | | | | | | | c | | | |
| | | | d | | | | | | | | | | | | | | | | | | | | | | 3.3 | 134 | | | RSP-SEE DRAINAGE DETAILS | | d | | | |
| | | | e | | | | | | | | | | | | | | | | | | | | | | | | | | | | e | | | |
| | | | | | | | | | | | | | | | | | | | | | | | | | | | | | | | f | | | |
| D-1 | 2.90 | 2 | a | | | | | | | | | | | | | | | | | | | | | | | | | | | 157+86.21 | a | 2 | 2.90 | D-1 |
| | | | b | | | | | | | | | | | | | | | | 1 | | | | | | | | | | REMOVE FES | | b | | | |
| | | | c | | | | | | | | | | | | | | | | | | | 1 | | | | | | | | | c | | | |
| | | | d | | | | | | | | | | | | | | | | | | | | | | | | | | | | d | | | |
| | | | e | | | | | | | | | | | | | | | | | | | | | | | | | | | | e | | | |
| | | | f | | | | | 0.23 | | | | | | | | | | | | | | | | | | | | | | | f | | | |
| D-2 | 3.07 | 3 | a | | | | | | | | | | | | | | | | | | | | | | | | | | | 166+72.30 | a | 3 | 3.07 | D-2 |
| | | | b | | | | | | | | | | | | | | | | 2 | | | | | | | | | | REMOVE FES | | b | | | |
| | | | c | | | | | | | | | | | | | | | | | | | 2 | | | | | | | 30" AFES | | c | | | |
| | | | d | | | | | | | | | | | | | | | | | | | | | | 8.5 | 220 | | | RSP-SEE DRAINAGE DETAILS | | d | | | |
| | | | e | | | | | | | | | | | | | | | | | | | | | | | | | | | | e | | | |
| | | | f | | | | | | | | | | | | | | | | | | | | | | | | | | | | f | | | |
| D-2 | 3.22 | 4 | a | | | | | | | | | | | | | | | | | | | | | | | | | | | 174+25.91 | a | 4 | 3.22 | D-2 |
| | | | b | | | | | 0.95 | | | | 2.76 | | | | | | | | | | | | | | | 326 | | G1 DI, 24-12X GRATE | | b | | | |
| | | | c | 10.0 | | | | | | | | | | | | | | | | | | | | | | | | | REMOVE CULVERT | | c | | | |
| | | | d | | | | | | | | | | | | | | | 10 | | | | | | | | | | | 12" x 10' CSP | | d | | | |
| | | | e | | | | | 0.23 | | | | | | | | | | | | | | | | | | | | | | | e | | | |
| | | | f | | | | | | | | | | | | | | | | | | | | | | | | | | | | f | | | |
| | | | g | | | | 1 | | | | | | | | | | | | | | | | | | | | | | ADJUST INLET TO GRADE | | g | | | |
| | | | h | | | | 1 | | | | | | | | | | | | | | | | | | | | | | ADJUST INLET TO GRADE | | h | | | |
| D-3 | 3.30 | 5 | a | 9.9 | | | | | | | | | | | | | | | | | | | | | | | | | REMOVE CULVERT | 178+55.71 | a | 5 | 3.30 | D-3 |
| | | | b | | | | | | | | | | | | | | | | | | | | | | | | | | | | b | | | |
| | | | c | | | | | | | | | | | | | | | | 2 | | | | | | | | | | REMOVE FES | | c | | | |
| | | | d | 56.5 | | | | | | | | | | | | | | | | | | | | | | | | | REMOVE CULVERT | | d | | | |
| | | | e | | | | | | | | | | | | | | | | | | | | | | 5.6 | 180 | | | RSP-SEE DRAINAGE DETAILS | | e | | | |
| | | | f | | | | | | 1.23 | | | | | | | | | | | | | | | | | | | | CONCRETE APRON | | f | | | |
| | | | g | | | | | | | | | | | | 63.00 | | | | | | | | | | | | | | 24" APC | | g | | | |
| | | | h | | | | | | | | | | | | | | | | | | 1 | | | | | | | | 24" FES | | h | | | |
| | | | i | | | | | | | | | | | | | | | | | | | | | | | | | | | | i | | | |
| | | | j | | | | | 1.17 | | | | 4.00 | | | | | | | | | | | | | | | 326 | | G1 DI, 24-12X GRATE | | j | | | |
| SHEET TOTAL | | | | 76.5 | | | 2 | 2.58 | 1.23 | | | | | | 63.00 | | | 10 | 6 | 1 | 1 | 3 | | | 17.4 | 534 | 652 | | | | | | |

(N) - NOT A SEPARATE PAY ITEM, FOR INFORMATION ONLY.

# DRAINAGE QUANTITIES
## DQ-1

REVISED BY | DATE REVISED
P. STAFFORD | C. OLSON
CALCULATED-DESIGNED BY | CHECKED BY
FUNCTIONAL SUPERVISOR
C. OLSON

STATE OF CALIFORNIA - DEPARTMENT OF TRANSPORTATION
Caltrans
NORTH REGION
OFFICE OF DESIGN, SOUTH
DESIGN BRANCH S10

06:34 14-JUN-2010 trmikesl 13986uid001.dgn

LAST REVISION 03-25-10
DATE PLOTTED => 14-JUN-2010
TIME PLOTTED => 06:34

| Dist | COUNTY | ROUTE | POST MILES TOTAL PROJECT | SHEET No. | TOTAL SHEETS |
|---|---|---|---|---|---|
| 01 | Lak | 53 | 2.8/7.5 | 115 | 217 |

Patrice A. Stafford 3-25-10
REGISTERED CIVIL ENGINEER DATE

6-1-10
PLANS APPROVAL DATE

REGISTERED PROFESSIONAL ENGINEER
PATRICE A. STAFFORD
No. 61256
Exp. 6-30-11
CIVIL
STATE OF CALIFORNIA

*THE STATE OF CALIFORNIA OR ITS OFFICERS OR AGENTS SHALL NOT BE RESPONSIBLE FOR THE ACCURACY OR COMPLETENESS OF SCANNED COPIES OF THIS PLAN SHEET.*

# DRAINAGE QUANTITIES

| DRAINAGE PLAN SHEET NO. | POST MILE | DRAINAGE SYSYTEM No. ⬡ | DRAINAGE UNIT ◯ | HDPE PLASTIC PIPELINER (SDR 32.5) 16" OD LF | 22" OD LF | 28" OD LF | 54" REINFORCED CONCRETE PIPE LF | 30" CSP INLET (.109" THICK) LF | REMOVE INLET EA | DITCH EXCAVATION CY | MINOR CONCRETE (BACKFILL) CY | MARKER (CULVERT) EA | ABANDON CULVERT LF | SAND BACKFILL CY | REMOVE STREAM GAGE EA | DESCRIPTION | STATION | DRAINAGE UNIT ◯ | DRAINAGE SYSYTEM No. ⬡ | POST MILE | DRAINAGE PLAN SHEET No. |
|---|---|---|---|---|---|---|---|---|---|---|---|---|---|---|---|---|---|---|---|---|---|
| D-1 | 2.83 | 1 | a | 127 | | | | | | | | | | | | 16" x 127' PLASTIC PIPE LINER | 154+50.02 | a | 1 | 2.83 | D-1 |
| | | | b | | | | | | | | | | | | | | | b | | | |
| | | | c | | | | | | | | | | | | | | | c | | | |
| | | | d | | | | | | | | | | | | | | | d | | | |
| | | | e | | | | | | | 10.0 | | | | | | DITCH EXCAVATION | | e | | | |
| | | | f | | | | | | | | | 2 | | | | CULVERT MARKER | | f | | | |
| | | | | | | | | | | | | | | | | | | | | | |
| D-1 | 2.90 | 2 | a | | | 248 | | | | | | | | | | 28" x 248' PLASTIC PIPE LINER | 157+86.21 | a | 2 | 2.90 | D-1 |
| | | | b | | | | | | | | | | | | | | | b | | | |
| | | | c | | | | | | | | | | | | | 30" AFES | | c | | | |
| | | | d | | | | | | 1 | | | | | | | REMOVE DI (CMP INLET) | | d | | | |
| | | | e | | | | | | | | | 2 | | | | CULVERT MARKER | | e | | | |
| | | | f | | | | | 10 | | | | | | | | 30" CSP INLET | | f | | | |
| | | | | | | | | | | | | | | | | | | | | | |
| D-2 | 3.07 | 3 | a | | | 154 | | | | | | | | | | 28"OD x 154' PLASTIC PIPE LINER | 166+72.30 | a | 3 | 3.07 | D-2 |
| | | | b | | | | | | | | | | | | | | | b | | | |
| | | | c | | | | | | | | | | | | | | | c | | | |
| | | | d | | | | | | | | | | | | | | | d | | | |
| | | | e | | | | | | | | | 2 | | | | CULVERT MARKER | | e | | | |
| | | | f | | | | | | | 10.0 | | | | | | DITCH EXCAVATION | | f | | | |
| | | | | | | | | | | | | | | | | | | | | | |
| D-2 | 3.22 | 4 | a | | | | | | 1 | | | | | | | REMOVE INLET | 174+25.91 | a | 4 | 3.22 | D-2 |
| | | | b | | | | | | | | | | | | | | | b | | | |
| | | | c | | | | | | | | | | | | | | | c | | | |
| | | | d | | | | | | | | | | | | | | | d | | | |
| | | | e | | | | | 4 | | | | | | | | 30" CSP INLET | | e | | | |
| | | | f | | | | | | | | | 2 | | | | CULVERT MARKER | | f | | | |
| | | | | | | | | | | | | | | | | | | | | | |
| D-3 | 3.30 | 5 | a | | | | | | | | | | | | | | 178+55.71 | a | 5 | 3.30 | D-3 |
| | | | b | | | | | | 1 | | | | | | | REMOVE DI | | b | | | |
| | | | c | | | | | | | | | | | | | | | c | | | |
| | | | d | | | | | | | | | | | | | | | d | | | |
| | | | e | | | | | | | | | | | | | | | e | | | |
| | | | f | | | | | | | | | | | | | | | f | | | |
| | | | g | | | | | | | | 91.6 | | | | | MINOR CONCRETE (BACKFILL) | | g | | | |
| | | | h | | | | | | | | | | | | | | | h | | | |
| | | | i | | | | | | | | | 2 | | | | CULVERT MARKER | | i | | | |
| | | | j | | | | | | | | | | | | | | | j | | | |
| | | | | | | | | | | | | | | | | | | | | | |
| SHEET TOTAL | | | | 127 | | 402 | | 14 | 3 | 20.0 | 91.6 | 10 | | | | | | | | | |

# DRAINAGE QUANTITIES
## DQ-2

STATE OF CALIFORNIA - DEPARTMENT OF TRANSPORTATION
Caltrans
NORTH REGION
OFFICE OF DESIGN, SOUTH
DESIGN BRANCH S10

FUNCTIONAL SUPERVISOR: C. OLSON
CALCULATED-DESIGNED BY: P. STAFFORD
CHECKED BY: C. OLSON
REVISED BY
DATE REVISED

06:34 14-JUN-2010 trmikesl 13986uid002.dgn

LAST REVISION 03-25-10 | DATE PLOTTED => 14-JUN-2010 | TIME PLOTTED => 06:34

| Dist | COUNTY | ROUTE | POST MILES TOTAL PROJECT | SHEET No. | TOTAL SHEETS |
|---|---|---|---|---|---|
| 01 | Lak | 53 | 2.8/7.5 | 116 | 217 |

Patrice A. Stafford 3-25-10
REGISTERED CIVIL ENGINEER DATE

6-1-10
PLANS APPROVAL DATE

REGISTERED PROFESSIONAL ENGINEER
PATRICE A. STAFFORD
No. 61256
Exp. 6-30-11
CIVIL
STATE OF CALIFORNIA

THE STATE OF CALIFORNIA OR ITS OFFICERS OR AGENTS SHALL NOT BE RESPONSIBLE FOR THE ACCURACY OR COMPLETENESS OF SCANNED COPIES OF THIS PLAN SHEET.

# DRAINAGE QUANTITIES

| DRAINAGE PLAN SHEET No. | POST MILE | DRAINAGE SYSTEM No. ⬡ | DRAINAGE UNIT ◯ | REMOVE CULVERT | REMOVE HEADWALL | REMOVE WINGWALL | ADJUST INLET | MINOR Conc (MINOR STRUCTURE) | MINOR Conc (Misc Const) | PRECAST Conc BOX CULVERT (6'X4') | STRUCTURAL CONCRETE BOX CULVERT | (N) HEIGHT OF INLET | CONCRETE INVERT PAVING | ALTERNATIVE PIPE CULVERT 18" | 24" | 36" | 42" | 12" CSP (.079" THICK) | REMOVE FLARED END SECTION | ALTERNATIVE FLARED END SECTION 18" | 24" | 30" | 36" | 42" | ROCK SLOPE PROTECTION (BACKING No. 1, METHOD B) | ROCK SLOPE PROTECTION FABRIC | MISCELLANEOUS IRON AND STEEL | BAR REINFORCING STEEL | DESCRIPTION | STATION | DRAINAGE UNIT ◯ | DRAINAGE SYSTEM No. ⬡ | POST MILE | DRAINAGE PLAN SHEET No. |
|---|---|---|---|---|---|---|---|---|---|---|---|---|---|---|---|---|---|---|---|---|---|---|---|---|---|---|---|---|---|---|---|---|---|---|
| | | | | LF | EA | EA | EA | CY | CY | LF | CY | LF | CY | LF | LF | LF | LF | LF | EA | EA | EA | EA | EA | EA | CY | SQYD | LB | LB | | | | | | |
| D-3 | 3.43 | 6 | a | 73.30 | | | | | | | | | | | | | | | | | | | | | | | | | REMOVE CULVERT | 184+34.78 | a | 6 | 3.43 | D-3 |
| | | | b | | | | | | | | | | | | | | | | 2 | | | | | | | | | | REMOVE FES | | b | | | |
| | | | c | | | | | | | | | | | | 98.90 | | | | | | | | | | | | | | 24" APC | | c | | | |
| | | | d | | | | | | | | | | | | | | | | | | 2 | | | | | | | | 24" AFES | | d | | | |
| | | | e | | | | | | | | | | | | | | | | | | | | | | 5.60 | 180 | | | RSP-SEE DRAINAGE DETAILS | | e | | | |
| | | | f | | | | | | | | | | | | | | | | | | | | | | | | | | | | f | | | |
| D-3 | 3.51 | 7 | a | | | | | | | | | | | | | | | | | | | | | | | | | | | 189+21.57 | a | 7 | 3.51 | D-3 |
| | | | b | | | | | | | | | | | | | | | | 2 | | | | | | | | | | REMOVE FES | | b | | | |
| | | | c | | | | | | | | | | | | | | | | | | 2 | | | | | | | | 24" AFES | | c | | | |
| | | | d | | | | | | | | | | | | | | | | | | | | | | 5.60 | 180 | | | RSP-SEE DRAINAGE DETAILS | | d | | | |
| | | | e | | | | | | | | | | | | | | | | | | | | | | | | | | | | e | | | |
| | | | f | | | | | | | | | | | | 61.50 | | | | | | | | | | | | | | 24" APC | | f | | | |
| D-4 | 3.59 | 8 | a | | | | 1 | | | | | | | | | | | | | | | | | | | | | | ADJUST INLET | 194+87.47 | a | 8 | 3.59 | D-4 |
| | | | b | | | | 1 | | | | | | | | | | | | | | | | | | | | | | ADJUST INLET | | b | | | |
| | | | c | | | | | | | | | | | | | | | | | | | | | | | | | | | | c | | | |
| D-4 | 3.62 | 9 | a | 64.50 | | | | | | | | | | | | | | | | | | | | | | | | | REMOVE CULVERT | 196+29.316 | a | 9 | 3.62 | D-4 |
| | | | b | | | | | | | | | | | | | | | | | | | | | | | | | | | | b | | | |
| | | | c | | | | | | | | | | | | | | | | 1 | | | | | | | | | | REMOVE FES | | c | | | |
| | | | d | | | | | | | | | | | | | 110.60 | | | | | | | | | | | | | 36" APC | | d | | | |
| | | | e | | | | | | | | | | | | | | | | | | | | 1 | | | | | | 36" AFES | | e | | | |
| | | | f | | | | | 0.95 | | | | 3.39 | | | | | | | | | | | | | | | 326 | | G1 DI, 24-12X GRATE | | f | | | |
| | | | g | | | | | | 1.23 | | | | | | | | | | | | | | | | | | | | CONCRETE APRON | | g | | | |
| | | | h | | | | | | | | | | | | | | | | | | | | | | 12.00 | 252 | | | RSP-SEE DRAINAGE DETAILS | | h | | | |
| | | | i | | | | | | | | | | | | | | | | | | | | | | | | | | | | i | | | |
| SHEET TOTAL | | | | 137.80 | | | 2 | 0.95 | 1.23 | | | | | | 160.40 | 110.60 | | | 5 | | 4 | | 1 | | 23.20 | 612 | 326 | | | | | | | |

(N) - NOT A SEPARATE PAY ITEM, FOR INFORMATION ONLY.

CALCULATED-DESIGNED BY P. STAFFORD
CHECKED BY C. OLSON
REVISED BY
DATE REVISED
FUNCTIONAL SUPERVISOR C. OLSON

STATE OF CALIFORNIA - DEPARTMENT OF TRANSPORTATION
Caltrans
NORTH REGION
OFFICE OF DESIGN, SOUTH
DESIGN BRANCH S10

06:34 14-JUN-2010 trmikesl 13986uid003.dgn

## DRAINAGE QUANTITIES
## DQ-3

LAST REVISION 03-25-10 | DATE PLOTTED => 14-JUN-2010 | TIME PLOTTED => 06:34

| Dist | COUNTY | ROUTE | POST MILES TOTAL PROJECT | SHEET No. | TOTAL SHEETS |
|---|---|---|---|---|---|
| 01 | Lak | 53 | 2.8/7.5 | 117 | 217 |

Patrice A. Stafford 3-25-10
REGISTERED CIVIL ENGINEER DATE

6-1-10
PLANS APPROVAL DATE

REGISTERED PROFESSIONAL ENGINEER
PATRICE A. STAFFORD
No. 61256
Exp. 6-30-11
CIVIL
STATE OF CALIFORNIA

*THE STATE OF CALIFORNIA OR ITS OFFICERS OR AGENTS SHALL NOT BE RESPONSIBLE FOR THE ACCURACY OR COMPLETENESS OF SCANNED COPIES OF THIS PLAN SHEET.*

# DRAINAGE QUANTITIES

| DRAINAGE PLAN SHEET No. | POST MILE | DRAINAGE SYSYTEM No. | DRAINAGE UNIT | HDPE PLASTIC PIPELINER (SDR 32.5) 16" OD LF | HDPE PLASTIC PIPELINER (SDR 32.5) 22" OD LF | HDPE PLASTIC PIPELINER (SDR 32.5) 28" OD LF | 54" REINFORCED CONCRETE PIPE LF | 30" CSP INLET (.109" THICK) LF | REMOVE INLET EA | DITCH EXCAVATION CY | MINOR CONCRETE (BACKFILL) CY | MARKER (CULVERT) EA | ABANDON CULVERT LF | SAND BACKFILL CY | REMOVE STREAM GAGE EA | DESCRIPTION | STATION | DRAINAGE UNIT | DRAINAGE SYSYTEM No. | POST MILE | DRAINAGE PLAN SHEET No. |
|---|---|---|---|---|---|---|---|---|---|---|---|---|---|---|---|---|---|---|---|---|---|
| D-3 | 3.43 | 6 | a | | | | | | | | | | | | | | 184+34.78 | a | 6 | 3.43 | D-3 |
| | | | b | | | | | | | | | | | | | | | b | | | |
| | | | c | | | | | | | | 167.9 | | | | | MINOR CONCRETE (BACKFILL) | | c | | | | |
| | | | d | | | | | | | | | | | | | | | d | | | |
| | | | e | | | | | | | | | | | | | | | e | | | |
| | | | f | | | | | | | | | 2 | | | | CULVERT MARKER | | f | | | |
| D-3 | 3.51 | 7 | a | | 192.0 | | | | | | | | | | | HDPE PIPE LINER | 189+21.57 | a | 7 | 3.51 | D-3 |
| | | | b | | | | | | | | | | | | | | | b | | | |
| | | | c | | | | | | | | | | | | | | | c | | | |
| | | | d | | | | | | | | | | | | | | | d | | | |
| | | | e | | | | | | | | | 2 | | | | CULVERT MARKER | | e | | | |
| D-4 | 3.59 | 8 | a | | | | | | | | | | | | | | 194+87.47 | a | 8 | 3.59 | D-4 |
| | | | b | | | | | | | | | | | | | | | b | | | |
| | | | c | | | | | | | | | 2 | | | | CULVERT MARKER | | c | | | |
| D-4 | 3.62 | 9 | a | | | | | | | | | | | | | | 196+29.316 | a | 9 | 3.62 | D-4 |
| | | | b | | | | | | 1 | | | | | | | REMOVE DRAINAGE INLET | | b | | | |
| | | | c | | | | | | | | | | | | | | | c | | | |
| | | | d | | | | | | | | 144.6 | | | | | MINOR CONCRETE (BACKFILL) | | d | | | |
| | | | e | | | | | | | | | | | | | | | e | | | |
| | | | f | | | | | | | | | | | | | | | f | | | |
| | | | g | | | | | | | | | | | | | | | g | | | |
| | | | h | | | | | | | | | | | | | | | h | | | |
| | | | i | | | | | | | | | 2 | | | | CULVERT MARKER | | i | | | |
| SHEET TOTAL | | | | | 192.0 | | | | 1 | | 312.5 | 8 | | | | | | | | | |

P. STAFFORD — CALCULATED-DESIGNED BY
C. OLSON — CHECKED BY
C. OLSON — FUNCTIONAL SUPERVISOR
REVISED BY
DATE REVISED

STATE OF CALIFORNIA - DEPARTMENT OF TRANSPORTATION
Caltrans
NORTH REGION
OFFICE OF DESIGN, SOUTH
DESIGN BRANCH S10

06:34 14-JUN-2010 trmikesl 13986uid004.dgn

## DRAINAGE QUANTITIES

## DQ-4

LAST REVISION 03-25-10 | DATE PLOTTED => 14-JUN-2010 | TIME PLOTTED => 06:34

| Dist | COUNTY | ROUTE | POST MILES TOTAL PROJECT | SHEET No. | TOTAL SHEETS |
|---|---|---|---|---|---|
| 01 | Lak | 53 | 2.8/7.5 | 118 | 217 |

Patrice A. Stafford 3-25-10
REGISTERED CIVIL ENGINEER DATE

6-1-10
PLANS APPROVAL DATE

REGISTERED PROFESSIONAL ENGINEER
PATRICE A. STAFFORD
No. 61256
Exp. 6-30-11
CIVIL
STATE OF CALIFORNIA

*THE STATE OF CALIFORNIA OR ITS OFFICERS OR AGENTS SHALL NOT BE RESPONSIBLE FOR THE ACCURACY OR COMPLETENESS OF SCANNED COPIES OF THIS PLAN SHEET.*

# DRAINAGE QUANTITIES

| DRAINAGE PLAN SHEET No. | POST MILE | DRAINAGE SYSTEM No. | DRAINAGE UNIT | REMOVE CULVERT | REMOVE HEADWALL | REMOVE WINGWALL | ADJUST INLET | MINOR Conc (MINOR STRUCTURE) | MINOR Conc (Misc Const) | PRECAST Conc BOX CULVERT (6'X4') | STRUCTURAL CONCRETE BOX CULVERT | (N) HEIGHT OF INLET | CONCRETE INVERT PAVING | ALTERNATIVE PIPE CULVERT 18" | ALTERNATIVE PIPE CULVERT 24" | ALTERNATIVE PIPE CULVERT 36" | ALTERNATIVE PIPE CULVERT 42" | 12" CSP (.079" THICK) | REMOVE FLARED END SECTION | ALTERNATIVE FLARED END SECTION 18" | ALTERNATIVE FLARED END SECTION 24" | ALTERNATIVE FLARED END SECTION 30" | ALTERNATIVE FLARED END SECTION 36" | ALTERNATIVE FLARED END SECTION 42" | ROCK SLOPE PROTECTION (BACKING No. 1, METHOD B) | ROCK SLOPE PROTECTION FABRIC | MISCELLANEOUS IRON AND STEEL | BAR REINFORCING STEEL | DESCRIPTION | STATION | DRAINAGE UNIT | DRAINAGE SYSTEM No. | POST MILE | DRAINAGE PLAN SHEET No. |
|---|---|---|---|---|---|---|---|---|---|---|---|---|---|---|---|---|---|---|---|---|---|---|---|---|---|---|---|---|---|---|---|---|---|---|
| | | | | LF | EA | EA | EA | CY | CY | LF | CY | LF | CY | LF | LF | LF | LF | LF | EA | EA | EA | EA | EA | EA | CY | SQYD | LB | LB | | | | | | |
| D-5 | 4.07 | 10 | a | | | | | | | | | | | | | | | | | | | | | | | | | | | 220+00.51 | a | 10 | 4.07 | D-5 |
| | | | b | | | | | | | | | | | | | | | | 2 | | | | | | | | | | REMOVE FES | | b | | | |
| | | | c | | | | | | | | | | | | | | | | | | 2 | | | | | | | | 24" AFES | | c | | | |
| | | | d | | | | | | | | | | | | | | | | | | | | | | | | | | | | d | | | |
| | | | e | | | | | | | | | | | | | | | | | | | | | | 5.60 | 180 | | | RSP-SEE DRAINAGAE DETAILS | | e | | | |
| | | | f | | | | | | | | | | | | | | | | | | | | | | | | | | | | f | | | |
| | | | g | | | | | | | | | | | | 13.0 | | | | | | | | | | | | | | 24" APC | | g | | | |
| D-5 | 4.34 | 11 | a | | | | | | | | | | | | | | | | 2 | | | | | | | | | | REMOVE FES | 233+61.22 | a | 11 | 4.34 | D-5 |
| | | | b | 66.10 | | | | | | | | | | | | | | | | | | | | | | | | | REMOVE 36" CMP | | b | | | |
| | | | c | | | | | | | | | | | | | | | | | | | | 2 | | | | | | 36" AFES | | c | | | |
| | | | d | | | | | | | | | | | | | 92.10 | | | | | | | | | | | | | 36" APC | | d | | | |
| | | | e | | | | | | | | | | | | | | | | | | | | | | 12.00 | 252 | | | RSP-SEE DRAINAGAE DETAILS | | e | | | |
| | | | f | | | | | | | | | | | | | | | | | | | | | | | | | | | | f | | | |
| | | | g | | | | | | | | | | | | | | | | | | | | | | | | | | | | g | | | |
| D-5 | 4.55 | 12 | a | | 2 | | | | | | | | | | | | | | | | | | | | | | | | REMOVE HEADWALL | 245+23.78 | a | 12 | 4.55 | D-5 |
| | | | b | | | | | | | | | | | | | | | | | | | | | | | | | | | | b | | | |
| | | | c | | | | | 9.8 | | | | | | | | | | | | | | | | | | | | | HEADWALL | | c | | | |
| | | | d | | | | | | | | | | | | | | | | | | | | | | | | | | | | d | | | |
| | | | e | | | | | | | | | | | | | | | | | | | | | | | | | | | | e | | | |
| D-6 | 4.82 | 13 | a | | | 2 | | | | | | | | | | | | | | | | | | | | | | | REMOVE WINGWALL | 259+32.50 | a | 13 | 4.82 | D-7 |
| | | | b | | | | | | | | 109.3 | | | | | | | | | | | | | | | | 26,975 | BOX CULVERT | | b | | | |
| | | | c | | | | | 26.8 | | | | | | | | | | | | | | | | | | | | | WINGWALL (TYPE 5) | | c | | | |
| | | | d | | | | | | | | | | | | | | | | | | | | | | | | | | | | d | | | |
| | | | e | | | | | | | | | | | | | | | | | | | | | | | | | | | | e | | | |
| D-7 | 5.05 | 14 | a | 52.00 | | | | | | | | | | | | | | | | | | | | | | | | | REMOVE CULVERT | 271+72.51 | a | 14 | 5.05 | D-7 |
| | | | b | | | | | | | | | | | | | | | | 2 | | | | | | | | | | REMOVE FES | | b | | | |
| | | | c | | | | | | | | | | | | | | | | | | 2 | | | | | | | | 24" AFES | | c | | | |
| | | | d | | | | | | | | | | | | 102 | | | | | | | | | | | | | | 24" APC | | d | | | |
| | | | e | | | | | | | | | | | | | | | | | | | | | | | | | | | | e | | | |
| SHEET TOTAL | | | | 118.10 | 2 | 2 | | 36.6 | | | 109.3 | | | | 115.0 | 92.10 | | | 6 | | 4 | | 2 | | 17.60 | 432 | | 26,975 | | | | | | |

(N) - NOT A SEPARATE PAY ITEM, FOR INFORMATION ONLY.

# DRAINAGE QUANTITIES

## DQ-5

REVISED BY | DATE REVISED
P. STAFFORD | C. OLSON
CALCULATED-DESIGNED BY | CHECKED BY
FUNCTIONAL SUPERVISOR
C. OLSON

STATE OF CALIFORNIA - DEPARTMENT OF TRANSPORTATION
Caltrans
NORTH REGION
OFFICE OF DESIGN, SOUTH
DESIGN BRANCH S10

06:34 14-JUN-2010 trmikesl 13986uid005.dgn

LAST REVISION 03-25-10
DATE PLOTTED => 14-JUN-2010
TIME PLOTTED => 06:34

| Dist | COUNTY | ROUTE | POST MILES TOTAL PROJECT | SHEET No. | TOTAL SHEETS |
|---|---|---|---|---|---|
| 01 | Lak | 53 | 2.8/7.5 | 119 | 217 |

Patrice A. Stafford 3-25-10
REGISTERED CIVIL ENGINEER DATE

6-1-10
PLANS APPROVAL DATE

REGISTERED PROFESSIONAL ENGINEER
PATRICE A. STAFFORD
No. 61256
Exp. 6-30-11
CIVIL
STATE OF CALIFORNIA

*THE STATE OF CALIFORNIA OR ITS OFFICERS OR AGENTS SHALL NOT BE RESPONSIBLE FOR THE ACCURACY OR COMPLETENESS OF SCANNED COPIES OF THIS PLAN SHEET.*

# DRAINAGE QUANTITIES

| DRAINAGE PLAN SHEET No. | POST MILE | DRAINAGE SYSYTEM No. ⬡ | DRAINAGE UNIT ◯ | HDPE PLASTIC PIPELINER (SDR 32.5) 16" OD LF | 22" OD LF | 28" OD LF | 54" REINFORCED CONCRETE PIPE LF | 30" CSP INLET (.109" THICK) LF | REMOVE INLET EA | DITCH EXCAVATION CY | MINOR CONCRETE (BACKFILL) CY | MARKER (CULVERT) EA | ABANDON CULVERT LF | SAND BACKFILL CY | REMOVE STREAM GAGE EA | DESCRIPTION | STATION | DRAINAGE UNIT ◯ | DRAINAGE SYSYTEM No. ⬡ | POST MILE | DRAINAGE PLAN SHEET No. |
|---|---|---|---|---|---|---|---|---|---|---|---|---|---|---|---|---|---|---|---|---|---|
| D-5 | 4.07 | 10 | a | | | | | | | | | | | | | | 220+00.51 | a | 10 | 4.07 | D-5 |
| | | | b | | 139.00 | | | | | | | | | | | 22" PP LINER | | b | | | |
| | | | c | | | | | | | | | | | | | | | c | | | |
| | | | d | | | | | | | | | | | | | | | d | | | |
| | | | e | | | | | | | 8.00 | | | | | | DITCH EXCAVATION | | e | | | |
| | | | f | | | | | | | | | | | | | | | f | | | |
| | | | g | | | | | | | | | 2 | | | | CULVERT MARKER | | g | | | |
| D-5 | 4.34 | 11 | a | | | | | | | | | | | | | | 233+61.22 | a | 11 | 4.34 | D-5 |
| | | | b | | | | | | | | | | | | | | | b | | | |
| | | | c | | | | | | | | | | | | | | | c | | | |
| | | | d | | | | | | | | 136.0 | | | | | MINOR CONCRETE (BACKFILL) | | d | | | |
| | | | e | | | | | | | | | | | | | | | e | | | |
| | | | f | | | | | | | 8.00 | | | | | | DITCH EXCAVATION | | f | | | |
| | | | g | | | | | | | | | 2 | | | | CULVERT MARKER | | g | | | |
| D-5 | 4.55 | 12 | a | | | | | | | | | | | | | | 245+23.78 | a | 12 | 4.55 | D-5 |
| | | | b | | | | 173.0 | | | | | | | | | 54" RCP-DOUBLE BARRELS | | b | | | |
| | | | c | | | | | | | | | | | | | | | c | | | |
| | | | d | | | | | | | 16.00 | | | | | | DITCH EXCAVATION | | d | | | |
| | | | e | | | | | | | | | 2 | | | | CULVERT MARKER | | e | | | |
| D-6 | 4.82 | 13 | a | | | | | | | | | | | | | | 259+32.50 | a | 13 | 4.82 | D-6 |
| | | | b | | | | | | | | | | | | | | | b | | | |
| | | | c | | | | | | | | | | | | | | | c | | | |
| | | | d | | | | | | | | | | | | 1 | REMOVE STREAM GAGE | | d | | | |
| | | | e | | | | | | | | | 2 | | | | CULVERT MARKER | | e | | | |
| D-7 | 5.05 | 14 | a | | | | | | | | | | | | | | 271+72.51 | a | 14 | 5.05 | D-7 |
| | | | b | | | | | | | | | | | | | | | b | | | |
| | | | c | | | | | | | | | | | | | | | | | | |
| | | | d | | | | | | | | | | | | | | | | | | |
| | | | e | | | | | | | | | 2 | | | | CULVERT MARKER | | | | | |
| SHEET TOTAL | | | | | 139.00 | | 173.0 | | | 32.00 | 136.0 | 10 | | | 1 | | | | | | |

| Dist | COUNTY | ROUTE | POST MILES TOTAL PROJECT | SHEET No. | TOTAL SHEETS |
|---|---|---|---|---|---|
| 01 | Lak | 53 | 2.8/7.5 | 120 | 217 |

Patrice A. Stafford 3-25-10
REGISTERED CIVIL ENGINEER DATE

6-1-10
PLANS APPROVAL DATE

REGISTERED PROFESSIONAL ENGINEER
PATRICE A. STAFFORD
No. 61256
Exp. 6-30-11
CIVIL
STATE OF CALIFORNIA

*THE STATE OF CALIFORNIA OR ITS OFFICERS OR AGENTS SHALL NOT BE RESPONSIBLE FOR THE ACCURACY OR COMPLETENESS OF SCANNED COPIES OF THIS PLAN SHEET.*

# DRAINAGE QUANTITIES

| DRAINAGE PLAN SHEET No. | POST MILE | DRAINAGE SYSTEM No. ⬡ | DRAINAGE UNIT ◯ | REMOVE CULVERT | REMOVE HEADWALL | REMOVE WINGWALL | ADJUST INLET | MINOR Conc (MINOR STRUCTURE) | MINOR Conc (Misc Const) | PRECAST Conc BOX CULVERT (6'X4') | STRUCTURAL CONCRETE BOX CULVERT | (N) HEIGHT OF INLET | CONCRETE INVERT PAVING | ALTERNATIVE PIPE CULVERT 18" | ALTERNATIVE PIPE CULVERT 24" | ALTERNATIVE PIPE CULVERT 36" | ALTERNATIVE PIPE CULVERT 42" | 12" CSP (.079" THICK) | REMOVE FLARED END SECTION | ALTERNATIVE FLARED END SECTION 18" | ALTERNATIVE FLARED END SECTION 24" | ALTERNATIVE FLARED END SECTION 30" | ALTERNATIVE FLARED END SECTION 36" | ALTERNATIVE FLARED END SECTION 42" | ROCK SLOPE PROTECTION (BACKING No. 1, METHOD B) | ROCK SLOPE PROTECTION FABRIC | MISCELLANEOUS IRON AND STEEL | BAR REINFORCING STEEL | DESCRIPTION | STATION | DRAINAGE UNIT ◯ | DRAINAGE SYSTEM No. ⬡ | POST MILE | DRAINAGE PLAN SHEET No. |
|---|---|---|---|---|---|---|---|---|---|---|---|---|---|---|---|---|---|---|---|---|---|---|---|---|---|---|---|---|---|---|---|---|---|---|
| | | | | LF | EA | EA | EA | CY | CY | LF | CY | LF | CY | LF | LF | LF | LF | LF | EA | EA | EA | EA | EA | EA | CY | SQYD | LB | LB | | | | | | |
| D-8 | 5.08 | 15 | a | 98.0 | | | | | | | | | | | 79.30 | | | | | | | | | | | | | | REMOVE CULVERT | 273+07.09 | a | 15 | 5.08 | D-8 |
| | | | b | | | | | | | | | | | | | | | | | | | | | | | | | | 24" APC | | b | | | |
| | | | c | | | | | | | | | | | | | | | | | | | | | | | | | | | | c | | | |
| | | | d | | | | | | | | | | | | | | | | 2 | | | | | | | | | | REMOVE FES | | d | | | |
| | | | e | | | | | | | | | | | | | | | | | 1 | 1 | | | | | | | | 24" AFES AND 18" AFES | | e | | | |
| | | | f | | | | | | | | | | | 39.8 | | | | | | | | | | | | | | | 18" APC | | f | | | |
| | | | g | | | | | | | | | | | | | | | | | | | | | | | | | | | | g | | | |
| | | | h | | | | | | | | | | | | | | | | | | | | | | | | | | | | h | | | |
| | | | i | | | | | 1.24 | | | | 4.00 | | | | | | | | | | | | | | | 326 | | DI (TYPE GO) 24-12X GRATE | | i | | | |
| D-8 | 5.15 | 16 | a | 66.4 | | | | | | | | | | | | | | | | | | | | | | | | | REMOVE CULVERT | 277+04.00 | a | 16 | 5.15 | D-8 |
| | | | b | | | | | | | | | | | | | | | | | | | | | | | | | | | | b | | | |
| | | | c | | | | | | | | | | | | 78.00 | | | | | | | | | | | | | | 24" APC | | c | | | |
| | | | d | | | | | | | | | | | | | | | | | 1 | 1 | | | | | | | | 24" AFES AND 18" AFES | | d | | | |
| | | | e | | | | | | | | | | | | | | | | | | | | | | | | | | | | e | | | |
| | | | f | | | | | | | | | | | | | | | | | | | | | | | | | | | | f | | | |
| | | | g | | | | | 1.24 | | | | 4.67 | | | | | | | | | | | | | | | 326 | | DI (TYPE GO) | | g | | | |
| D-8 | 5.25 | 17 | a | 172.0 | | | | | | | | | | | | | | | | | | | | | | | | | REMOVE CULVERT | 281+18.41 | a | 17 | 5.25 | D-8 |
| | | | b | | 2 | | | | | | | | | | | | | | | | | | | | | | | | REMOVE HEADWALL | | b | | | |
| | | | c | | | | | | | 119.6 | | | | | | | | | | | | | | | | | | | 6' x 4' RCB (PRECAST) | | c | | | |
| | | | d | | | | | 4.0 | | | | | | | | | | | | | | | | | | | | | WINGWALL (TYPE E) | | d | | | |
| | | | e | | | | | | | | | | | | | | | | | | | | | | | | | | | | e | | | |
| | | | f | | | | | | | | | | | | | | | | | | | | | | | | | | | | f | | | |
| D-9 | 5.40 | 18 | a | 66.0 | | | | | | | | | | | | | | | | | | | | | | | | | REMOVE CULVERT | 290+43.68 | a | 18 | 5.40 | D-9 |
| | | | b | | | | | | | | | | | | | | | | | | | | | | | | | | | | b | | | |
| | | | c | | | | | | | | | | | | 68.00 | | | | | | | | | | | | | | 24" APC | | c | | | |
| | | | d | | | | | 1.24 | | | | 4.19 | | | | | | | | | | | | | | | 326 | | DI (TYPE GO) 24-12X GRATE | | d | | | |
| | | | e | | | | | | | | | | | | | | | | | | 1 | | | | | | | | 24" AFES | | e | | | |
| | | | f | | | | | | 1.23 | | | | | | | | | | | | | | | | | | | | CONCRETE APRON | | f | | | |
| | | | g | | | | | | | | | | | | | | | | | | | | | | 5.60 | 180 | | | RSP | | g | | | |
| | | | h | | | | | | | | | | | | | | | | | | | | | | | | | | | | h | | | |
| SHEET TOTAL | | | | 402.4 | 2 | | | 7.72 | 1.23 | 119.6 | | | | 39.8 | 225.30 | | | | 2 | 2 | 3 | | | | 5.60 | 180 | 978 | | | | | | | |

(N) - NOT A SEPARATE PAY ITEM, FOR INFORMATION ONLY.

# DRAINAGE QUANTITIES

## DQ-7

CALCULATED-DESIGNED BY P. STAFFORD
CHECKED BY C. OLSON
REVISED BY
DATE REVISED
FUNCTIONAL SUPERVISOR C. OLSON

STATE OF CALIFORNIA - DEPARTMENT OF TRANSPORTATION
Caltrans
NORTH REGION
OFFICE OF DESIGN, SOUTH
DESIGN BRANCH S10

06:34 14-JUN-2010 trmikesl 13986uid007.dgn

LAST REVISION DATE PLOTTED => 14-JUN-2010
03-25-10 TIME PLOTTED => 06:34

| Dist | COUNTY | ROUTE | POST MILES TOTAL PROJECT | SHEET No. | TOTAL SHEETS |
|---|---|---|---|---|---|
| 01 | Lak | 53 | 2.8/7.5 | 121 | 217 |

Patrice A. Stafford 3-25-10
REGISTERED CIVIL ENGINEER DATE

6-1-10
PLANS APPROVAL DATE

REGISTERED PROFESSIONAL ENGINEER
PATRICE A. STAFFORD
No. 61256
Exp. 6-30-11
CIVIL
STATE OF CALIFORNIA

THE STATE OF CALIFORNIA OR ITS OFFICERS OR AGENTS SHALL NOT BE RESPONSIBLE FOR THE ACCURACY OR COMPLETENESS OF SCANNED COPIES OF THIS PLAN SHEET.

# DRAINAGE QUANTITIES

| DRAINAGE PLAN SHEET No. | POST MILE | DRAINAGE SYSYTEM No. | DRAINAGE UNIT | HDPE PLASTIC PIPELINER (SDR 32.5) 16" OD LF | HDPE 22" OD LF | HDPE 28" OD LF | 54" REINFORCED CONCRETE PIPE LF | 30" CSP INLET (.109" THICK) LF | REMOVE INLET EA | DITCH EXCAVATION CY | MINOR CONCRETE (BACKFILL) CY | MARKER (CULVERT) EA | ABANDON CULVERT LF | SAND BACKFILL CY | REMOVE STREAM GAGE EA | DESCRIPTION | STATION | DRAINAGE UNIT | DRAINAGE SYSYTEM No. | POST MILE | DRAINAGE PLAN SHEET No. |
|---|---|---|---|---|---|---|---|---|---|---|---|---|---|---|---|---|---|---|---|---|---|
| D-8 | 5.08 | 15 | a | | | | | | | | | | | | | | 273+07.09 | a | 15 | 5.08 | D-8 |
| | | | b | | | | | | | | | | | | | | | b | | | |
| | | | c | | | | | | 1 | | | | | | | REMOVE DI | | c | | | |
| | | | d | | | | | | | | | | | | | | | d | | | |
| | | | e | | | | | | | | | | | | | | | e | | | |
| | | | f | | | | | | | | | | | | | | | f | | | |
| | | | g | | | | | | | 8 | | | | | | DITCH EXCAVATION | | g | | | |
| | | | h | | | | | | | | | 2 | | | | CULVERT MARKER | | h | | | |
| | | | i | | | | | | | | | | | | | | | i | | | |
| | | | | | | | | | | | | | | | | | | | | | |
| D-8 | 5.15 | 16 | a | | | | | | | | | | | | | | 277+04.0 | a | 16 | 5.15 | D-8 |
| | | | b | | | | | | 1 | | | | | | | REMOVE DRAINAGE INLET | | b | | | |
| | | | c | | | | | | | | 142.4 | | | | | MINOR CONCRETE (BACKFILL) | | c | | | |
| | | | d | | | | | | | | | | | | | | | d | | | |
| | | | e | | | | | | | 8 | | | | | | DITCH EXCAVATION | | e | | | |
| | | | f | | | | | | | | | 2 | | | | CULVERT MARKER | | f | | | |
| | | | g | | | | | | | | | | | | | | | g | | | |
| | | | h | | | | | | | | | | | | | | | h | | | |
| | | | | | | | | | | | | | | | | | | | | | |
| D-8 | 5.25 | 17 | a | | | | | | | | | | | | | | 281+18.41 | a | 17 | 5.25 | D-8 |
| | | | b | | | | | | | | | | | | | | | b | | | |
| | | | c | | | | | | | | | | | | | | | c | | | |
| | | | d | | | | | | | | | | | | | | | d | | | |
| | | | e | | | | | | | 8 | | | | | | DITCH EXCAVATION | | e | | | |
| | | | f | | | | | | | | | 2 | | | | CULVERT MARKER | | f | | | |
| | | | | | | | | | | | | | | | | | | | | | |
| D-9 | 5.40 | 18 | a | | | | | | | | | | | | | | 290+43.68 | a | 18 | 5.40 | D-9 |
| | | | b | | | | | | 1 | | | | | | | REMOVE DRAINAGE INLET | | b | | | |
| | | | c | | | | | | | | 89.7 | | | | | MINOR CONCRETE (BACKFILL) | | c | | | |
| | | | d | | | | | | | | | | | | | | | d | | | |
| | | | e | | | | | | | | | | | | | | | e | | | |
| | | | f | | | | | | | | | | | | | | | f | | | |
| | | | g | | | | | | | | | | | | | | | g | | | |
| | | | h | | | | | | | | | 2 | | | | CULVERT MARKER | | h | | | |
| | | | | | | | | | | | | | | | | | | | | | |
| SHEET TOTAL | | | | | | | | | 3 | 24 | 232.1 | 8 | | | | | | | | | |

# DRAINAGE QUANTITIES

DQ-8

| REVISED BY | DATE REVISED |
|---|---|
| | |

| CALCULATED-DESIGNED BY | P. STAFFORD |
|---|---|
| CHECKED BY | C. OLSON |
| FUNCTIONAL SUPERVISOR | C. OLSON |

STATE OF CALIFORNIA - DEPARTMENT OF TRANSPORTATION
Caltrans
NORTH REGION
OFFICE OF DESIGN, SOUTH
DESIGN BRANCH S10

06:34 14-JUN-2010 trmikesl 13986uid008.dgn

LAST REVISION 03-25-10 | DATE PLOTTED => 14-JUN-2010 | TIME PLOTTED => 06:34

| Dist | COUNTY | ROUTE | POST MILES TOTAL PROJECT | SHEET No. | TOTAL SHEETS |
|---|---|---|---|---|---|
| 01 | Lak | 53 | 2.8/7.5 | 122 | 217 |

Patrice A. Stafford 3-25-10
REGISTERED CIVIL ENGINEER DATE

6-1-10
PLANS APPROVAL DATE

REGISTERED PROFESSIONAL ENGINEER
PATRICE A. STAFFORD
No. 61256
Exp. 6-30-11
CIVIL
STATE OF CALIFORNIA

*THE STATE OF CALIFORNIA OR ITS OFFICERS OR AGENTS SHALL NOT BE RESPONSIBLE FOR THE ACCURACY OR COMPLETENESS OF SCANNED COPIES OF THIS PLAN SHEET.*

# DRAINAGE QUANTITIES

| DRAINAGE PLAN SHEET No. | POST MILE | DRAINAGE SYSTEM No. ⬡ | DRAINAGE UNIT ◯ | REMOVE CULVERT | REMOVE HEADWALL | REMOVE WINGWALL | ADJUST INLET | MINOR Conc (MINOR STRUCTURE) | MINOR Conc (Misc Const) | PRECAST Conc BOX CULVERT (6'X4') | STRUCTURAL CONCRETE BOX CULVERT | (N) HEIGHT OF INLET | CONCRETE INVERT PAVING | ALTERNATIVE PIPE CULVERT 18" | 24" | 36" | 42" | 12" CSP (.079" THICK) | REMOVE FLARED END SECTION | ALTERNATIVE FLARED END SECTION 18" | 24" | 30" | 36" | 42" | ROCK SLOPE PROTECTION (BACKING No. 1, METHOD B) | ROCK SLOPE PROTECTION FABRIC | MISCELLANEOUS IRON AND STEEL | BAR REINFORCING STEEL | DESCRIPTION | STATION | DRAINAGE UNIT ◯ | DRAINAGE SYSTEM No. ⬡ | POST MILE | DRAINAGE PLAN SHEET No. |
|---|---|---|---|---|---|---|---|---|---|---|---|---|---|---|---|---|---|---|---|---|---|---|---|---|---|---|---|---|---|---|---|---|---|---|
| | | | | LF | EA | EA | EA | CY | CY | LF | CY | LF | CY | LF | LF | LF | LF | LF | EA | EA | EA | EA | EA | EA | CY | SQYD | LB | LB | | | | | | |
| D-9 | 5.44 | 19 | a | | | | | | | | | | | | | | | | | | | | | | | | | | | 292+47.05 | a | 19 | 5.44 | D-9 |
| | | | b | 86 | | | | | | | | | | | | | | | | | | | | | | | | | REMOVE CULVERT | | b | | | | |
| | | | c | | | | | | | | | | | | 67.00 | | | | | | | | | | | | | | 24" APC | | c | | | | |
| | | | d | | | | | 1.24 | | | | 4.35 | | | | | | | | | | | | | | | 326 | | DI (TYPE G0) 24-12X GRATE | | d | | | | |
| | | | e | | | | | | | | | | | | | | | | | | | | | | 10.00 | 180 | | | RSP | | e | | | | |
| | | | f | | | | | | | | | | | | | | | | | | | | | | | | | | | | f | | | | |
| | | | g | | | | | | | | | | | | | | | | | | | | | | | | | | | | g | | | | |
| | | | h | | | | | | | | | | | | | | | | | | 1 | | | | | | | | 24" AFES | | | | | | |
| D-9 | 5.51 | 20 | a | | | | | | | | | | | | | | | | 1 | | | | | | | | | | REMOVE FES | 295+83.32 | a | 20 | 5.51 | D-9 |
| | | | b | | | | | | | | | | | | | | | | | 2 | | | | | | | | | 18" AFES | | b | | | | |
| | | | c | | | | | | | | | | | | | | | | | | | | | | 3.30 | 134 | | | RSP-SEE DRAINAGE DETAILS | | c | | | | |
| | | | d | | | | | | | | | | | | | | | | | | | | | | | | | | | | d | | | | |
| | | | e | | | | | | | | | | | | | | | | | | | | | | | | | | | | e | | | | |
| | | | f | | | | | | | | | | | | | | | | | | | | | | | | | | | | f | | | | |
| | | | g | | | | | | | | | | | 21.00 | | | | | | | | | | | | | | | 18" APC | | g | | | | |
| D-10 | 5.60 | 21 | a | | | | | | | | | | | | | | | | | | | | | | | | | | | 299+89.59 | a | 21 | 5.60 | D-10 |
| | | | b | | | | | | | | | | | | | | | | 1 | | | | | | | | | | REMOVE FES | | b | | | | |
| | | | c | | | | | | | | | | | | | | | | | 2 | | | | | | | | | 18" AFES | | c | | | | |
| | | | d | | | | | | | | | | | | | | | | | | | | | | 3.30 | 134 | | | RSP-SEE DRAINAGE DETAILS | | d | | | | |
| | | | e | | | | | | | | | | | | | | | | | | | | | | | | | | | | e | | | | |
| | | | f | | | | | | | | | | | | | | | | | | | | | | | | | | | | f | | | | |
| | | | g | | | | | | | | | | | 39.00 | | | | | | | | | | | | | | | 18" APC | | g | | | | |
| D-10 | 5.69 | 22 | a | | | | | | | | | | | | | | | | | | | | | | | | | | | 305+21.42 | a | 22 | 5.69 | D-10 |
| | | | b | | | | | | | | | | | | | | | | 2 | | | | | | | | | | REMOVE FES | | b | | | | |
| | | | c | | | | | | | | | | | | | | | | | | | | | | | | | | | | c | | | | |
| | | | d | 10 | | | | | | | | | | | | | | | | | | | | | | | | | REMOVE CULVERT | | d | | | | |
| | | | e | | | | | | | | | | | | | | | | | | | | | | 5.60 | 180 | | | RSP-SEE DRAINAGE DETAILS | | e | | | | |
| | | | f | | | | | | | | | | | | | | | | | | | | | | | | | | | | f | | | | |
| | | | g | | | | | 1.24 | | | | 4.38 | | | | | | | | | | | | | | | 326 | | DI (TYPE G0) 24-12X GRATE | | g | | | | |
| | | | h | | | | | | | | | | | | | | | | | | | | | | | | | | | | h | | | | |
| | | | i | | | | | | | | | | | 16.00 | | | | | | | | | | | | | | | 18" APC | | i | | | | |
| D-10 | 5.85 | 23 | a | | | | | | | | | | | | | | | | | | | | | | | | | | | 313+61.93 | a | 23 | 5.85 | D-10 |
| | | | b | | | | | | | | | | | | | | | | 2 | | | | | | | | | | REMOVE FES | | b | | | | |
| | | | c | | | | | | | | | | | | | | | | | | 2 | | | | | | | | 24" AFES | | c | | | | |
| | | | d | | | | | | | | | | | | | | | | | | | | | | 5.60 | 180 | | | RSP-SEE DRAINAGE DETAILS | | d | | | | |
| | | | e | | | | | | | | | | | | | | | | | | | | | | | | | | | | e | | | | |
| | | | f | | | | | | | | | | | | | | | | | | | | | | | | | | | | f | | | | |
| | | | g | | | | | | | | | | | | 32 | | | | | | | | | | | | | | 24" APC | | g | | | | |
| SHEET TOTAL | | | | 96 | | | | 2.48 | | | | | | 76.00 | 99.00 | | | | 6 | 4 | 3 | | | | 27.8 | 808 | 652 | | | | | | | |

(N) - NOT A SEPARATE PAY ITEM, FOR INFORMATION ONLY.

# DRAINAGE QUANTITIES

## DQ-9

P. STAFFORD — REVISED BY
C. OLSON — DATE REVISED
CALCULATED-DESIGNED BY
CHECKED BY
FUNCTIONAL SUPERVISOR
C. OLSON

STATE OF CALIFORNIA - DEPARTMENT OF TRANSPORTATION
Caltrans®
NORTH REGION
OFFICE OF DESIGN, SOUTH
DESIGN BRANCH S10

06:34 14-JUN-2010 trmikesl 13986uid009.dgn

LAST REVISION DATE PLOTTED => 14-JUN-2010
03-25-10 TIME PLOTTED => 06:34

| Dist | COUNTY | ROUTE | POST MILES TOTAL PROJECT | SHEET No. | TOTAL SHEETS |
|---|---|---|---|---|---|
| 01 | Lak | 53 | 2.8/7.5 | 123 | 217 |

Patrice A. Stafford 3-25-10
REGISTERED CIVIL ENGINEER DATE

6-1-10
PLANS APPROVAL DATE

REGISTERED PROFESSIONAL ENGINEER
PATRICE A. STAFFORD
No. 61256
Exp. 6-30-11
CIVIL
STATE OF CALIFORNIA

*THE STATE OF CALIFORNIA OR ITS OFFICERS OR AGENTS SHALL NOT BE RESPONSIBLE FOR THE ACCURACY OR COMPLETENESS OF SCANNED COPIES OF THIS PLAN SHEET.*

# DRAINAGE QUANTITIES

| DRAINAGE PLAN SHEET No. | POST MILE | DRAINAGE SYSYTEM No. ⬡ | DRAINAGE UNIT ◯ | HDPE PLASTIC PIPELINER (SDR 32.5) 16" OD LF | 22" OD LF | 28" OD LF | 54" REINFORCED CONCRETE PIPE LF | 30" CSP INLET (.109" THICK) LF | REMOVE INLET EA | DITCH EXCAVATION CY | MINOR CONCRETE (BACKFILL) CY | MARKER (CULVERT) EA | ABANDON CULVERT LF | SAND BACKFILL CY | REMOVE STREAM GAGE EA | DESCRIPTION | STATION | DRAINAGE UNIT ◯ | DRAINAGE SYSYTEM No. ⬡ | POST MILE | DRAINAGE PLAN SHEET No. |
|---|---|---|---|---|---|---|---|---|---|---|---|---|---|---|---|---|---|---|---|---|---|
| D-9 | 5.44 | 19 | a | | | | | | 1 | | | | | | | REMOVE DI | 292+47.05 | a | 19 | 5.44 | D-9 |
| | | | b | | | | | | | | | | | | | | | b | | | |
| | | | c | | | | | | | | 98.9 | | | | | MINOR CONCRETE (BACKFILL) | | c | | | |
| | | | d | | | | | | | | | | | | | | | d | | | |
| | | | e | | | | | | | | | | | | | | | e | | | |
| | | | f | | | | | | | 8 | | | | | | DITCH EXCAVATION | | f | | | |
| | | | g | | | | | | | | | 2 | | | | CULVERT MARKER | | g | | | |
| D-9 | 5.51 | 20 | a | | | | | | | | | | | | | | 295+83.32 | a | 20 | 5.51 | D-9 |
| | | | b | | | | | | | | | | | | | | | b | | | |
| | | | c | | | | | | | | | | | | | | | c | | | |
| | | | d | 107.0 | | | | | | | | | | | | 16" OD PP LINER (HDPE) | | d | | | |
| | | | e | | | | | | | 8 | | | | | | DITCH EXCAVATION | | e | | | |
| | | | f | | | | | | | | | 2 | | | | CULVERT MARKER | | f | | | |
| | | | g | | | | | | | | | | | | | | | g | | | |
| D-10 | 5.60 | 21 | a | 122.0 | | | | | | | | | | | | 16" OD PP LINER (HDPE) | 299+89.59 | a | 21 | 5.60 | D-10 |
| | | | b | | | | | | | | | | | | | | | b | | | |
| | | | c | | | | | | | | | | | | | | | c | | | |
| | | | d | | | | | | | | | | | | | | | d | | | |
| | | | e | | | | | | | 8 | | | | | | DITCH EXCAVATION | | e | | | |
| | | | f | | | | | | | | | 2 | | | | CULVERT MARKER | | f | | | |
| | | | g | | | | | | | | | | | | | | | g | | | |
| D-10 | 5.69 | 22 | a | 69.0 | | | | | | | | | | | | 16" OD PP LINER (HDPE) | 305+21.42 | a | 22 | 5.69 | D-10 |
| | | | b | | | | | | | | | | | | | | | b | | | |
| | | | c | | | | | | 1 | | | | | | | REMOVE DI | | c | | | |
| | | | d | | | | | | | | | | | | | | | d | | | |
| | | | e | | | | | | | | | | | | | | | e | | | |
| | | | f | | | | | | | 15 | | | | | | DITCH EXCAVATION | | f | | | |
| | | | g | | | | | | | | | | | | | | | g | | | |
| | | | h | | | | | | | | | 2 | | | | CULVERT MARKER | | h | | | |
| | | | i | | | | | | | | | | | | | | | i | | | |
| D-10 | 5.85 | 23 | a | | 152 | | | | | | | | | | | 22" OD PP LINER (HDPE) | 313+61.93 | a | 23 | 5.85 | D-10 |
| | | | b | | | | | | | | | | | | | | | b | | | |
| | | | c | | | | | | | | | | | | | | | c | | | |
| | | | d | | | | | | | | | | | | | | | d | | | |
| | | | e | | | | | | | 8 | | | | | | DITCH EXCAVATION | | e | | | |
| | | | f | | | | | | | | | 2 | | | | CULVERT MARKER | | f | | | |
| | | | g | | | | | | | | | | | | | | | g | | | |
| SHEET TOTAL | | | | 298.0 | 152 | | | | 2 | 47 | 98.9 | 10 | | | | | | | | | |

## DRAINAGE QUANTITIES

## DQ-10

P. STAFFORD — CALCULATED-DESIGNED BY
C. OLSON — CHECKED BY
C. OLSON — FUNCTIONAL SUPERVISOR
REVISED BY
DATE REVISED

STATE OF CALIFORNIA - DEPARTMENT OF TRANSPORTATION
Caltrans
NORTH REGION
OFFICE OF DESIGN, SOUTH
DESIGN BRANCH S10

06:35 14-JUN-2010 trmikesl 13986uid010.dgn

LAST REVISION 03-25-10 | DATE PLOTTED => 14-JUN-2010 | TIME PLOTTED => 06:35

| Dist | COUNTY | ROUTE | POST MILES TOTAL PROJECT | SHEET No. | TOTAL SHEETS |
|---|---|---|---|---|---|
| 01 | Lak | 53 | 2.8/7.5 | 124 | 217 |

Patrice A. Stafford 3-25-10
REGISTERED CIVIL ENGINEER DATE

6-1-10
PLANS APPROVAL DATE

REGISTERED PROFESSIONAL ENGINEER
PATRICE A. STAFFORD
No. 61256
Exp. 6-30-11
CIVIL
STATE OF CALIFORNIA

*THE STATE OF CALIFORNIA OR ITS OFFICERS OR AGENTS SHALL NOT BE RESPONSIBLE FOR THE ACCURACY OR COMPLETENESS OF SCANNED COPIES OF THIS PLAN SHEET.*

# DRAINAGE QUANTITIES

| DRAINAGE PLAN SHEET No. | POST MILE | DRAINAGE SYSTEM No. ⬡ | DRAINAGE UNIT ◯ | REMOVE CULVERT | REMOVE HEADWALL | REMOVE WINGWALL | ADJUST INLET | MINOR Conc (MINOR STRUCTURE) | MINOR Conc (Misc Const) | PRECAST Conc BOX CULVERT (6'X4') | STRUCTURAL CONCRETE BOX CULVERT | (N) HEIGHT OF INLET | CONCRETE MINOR PAVING | ALTERNATIVE PIPE CULVERT 18" | 24" | 36" | 42" | 12" CSP (.079" THICK) | REMOVE FLARED END SECTION | ALTERNATIVE FLARED END SECTION 18" | 24" | 30" | 36" | 42" | ROCK SLOPE PROTECTION (BACKING No. 1, METHOD B) | ROCK SLOPE PROTECTION FABRIC | MISCELLANEOUS IRON AND STEEL | BAR REINFORCING STEEL | DESCRIPTION | STATION | DRAINAGE UNIT ◯ | DRAINAGE SYSTEM No. ⬡ | POST MILE | DRAINAGE PLAN SHEET No. |
|---|---|---|---|---|---|---|---|---|---|---|---|---|---|---|---|---|---|---|---|---|---|---|---|---|---|---|---|---|---|---|---|---|---|---|
| | | | | LF | EA | EA | EA | CY | CY | LF | CY | LF | CY | LF | LF | LF | LF | LF | EA | EA | EA | EA | EA | EA | CY | SQYD | LB | LB | | | | | | |
| D-11 | 5.88 | 24 | a | | | | | 1.24 | | | | 4.00 | | | | | | | | | | | | | | | 326 | | DI (TYPE GO) 24-12X GRATE | 315+25.00 | a | 24 | 5.88 | D-11 |
| | | | b | | | | | | | | | | | | 46.2 | | | | | | | | | | | | | | 24" APC | | b | | | |
| | | | c | | | | | 1.24 | | | | 3.80 | | | | | | | | | | | | | | | 326 | | DI (TYPE GO) 24-12X GRATE | | c | | | |
| | | | d | | | | | | | | | | | | 45.0 | | | | | | | | | | | | | | 24" APC | | d | | | |
| | | | e | | | | | | | | | | | | | | | | | | | | | | 5.6 | 180 | | | RSP-SEE DRAINAGE DETAILS | | e | | | |
| | | | f | | | | | | | | | | | | | | | | | | | | | | | | | | | | f | | | |
| | | | g | | | | | | | | | | | | | | | | | | | | | | | | | | | | g | | | |
| D-11 | 5.92 | 25 | a | | | | | | | | | | | | | | | | | | | | | | | | | | | 318+03.17 | a | 25 | 5.92 | D-11 |
| | | | b | | | | | | | | | | | | 117.0 | | | | | | | | | | | | | | 24" APC | | b | | | |
| | | | c | | | | | | | | | | | | | | | | | | 2 | | | | | | | | 24" AFES | | c | | | |
| | | | d | | | | | | | | | | | | | | | | | | | | | | 11.2 | 360 | | | RSP-SEE DRAINAGE DETAILS | | d | | | |
| | | | e | | | | | | | | | | | | | | | | | | | | | | | | | | | | e | | | |
| | | | f | | | | | | | | | | | | | | | | | | | | | | | | | | | | f | | | |
| | | | g | | | | | | | | | | | | | | | | 2 | | | | | | | | | | REMOVE FES | | g | | | |
| D-11 | 6.10 | 26 | a | | | | | | | | | | | | | | | | | | | | | | | | | | | 327+20.15 | a | 26 | 6.10 | D-11 |
| | | | b | | | | | | | | | | | | | | | | 2 | | | | | | | | | | REMOVE FES | | b | | | |
| | | | c | | | | | | | | | | | | | | | | | 2 | | | | | | | | | 18" AFES | | c | | | |
| | | | d | | | | | | | | | | | | | | | | | | | | | | 8.5 | 220 | | | RSP-SEE DRAINAGE DETAILS | | d | | | |
| | | | e | | | | | | | | | | | | | | | | | | | | | | | | | | | | e | | | |
| | | | f | | | | | | | | | | | | | | | | | | | | | | | | | | | | f | | | |
| | | | g | | | | | | | | | | | 20.00 | | | | | | | | | | | | | | | 18" APC | | g | | | |
| D-11 | 6.21 | 27 | a | | | | | | | | | | | | | | | | | | | | | | | | | | | 327+87.08 | a | 27 | 6.21 | D-11 |
| | | | b | | | | | | | | | | | | | | | | | | | 1 | | | | | | | 30" AFES | | b | | | |
| | | | c | | | | | | | | | | | | | | | | | | | | | | 17.0 | 440 | | | RSP-SEE DRAINAGE DETAILS | | c | | | |
| | | | d | | | | | | | | | | | | | | | | | | | | | | | | | | | | d | | | |
| | | | e | 20 | | | | | | | | | | | | | | | | | | | | | | | | | REMOVE CULVERT | | e | | | |
| | | | f | | | | | 1.52 | | | | | | | | | | | | | | | | | | | 90 | | MINOR CONCRETE (HEADWALL) | | f | | | |
| | | | g | | | | | | | | | | | | | | | | | | | | | | | | | | | | g | | | |
| D-12 | 6.43 | 28 | a | | | | | | | | | | 4.52 | | | | | | | | | | | | | | | | INVERT PAVING | 344+74.52 | a | 28 | 6.43 | D-12 |
| | | | b | | | | | | | | | | | | | | | | 2 | | | | | | | | | | REMOVE FES | | b | | | |
| | | | c | | | | | | | | | | | | | | | | | | | | | 2 | | | | | 42" AFES | | c | | | |
| | | | d | | | | | | | | | | | | | | | | | | | | | | | | | | | | d | | | |
| | | | e | | | | | | | | | | | | | | 31.0 | | | | | | | | | | | | 42" APC | | e | | | |
| SHEET TOTAL | | | | 20 | | | | 4.00 | | | | | 4.52 | 20.00 | 208.2 | | 31.0 | | 6 | 2 | 2 | 1 | | 2 | 42.3 | 1,200 | 742 | | | | | | | |

(N) - NOT A SEPARATE PAY ITEM, FOR INFORMATION ONLY.

# DRAINAGE QUANTITIES

## DQ-11

REVISED BY | DATE REVISED
P. STAFFORD | C. OLSON
CALCULATED-DESIGNED BY | CHECKED BY
FUNCTIONAL SUPERVISOR
C. OLSON

STATE OF CALIFORNIA - DEPARTMENT OF TRANSPORTATION
Caltrans
NORTH REGION
OFFICE OF DESIGN, SOUTH
DESIGN BRANCH S10

06:35 14-JUN-2010 trmikesl 13986uid011.dgn

LAST REVISION 03-25-10 | DATE PLOTTED => 14-JUN-2010 | TIME PLOTTED => 06:35

| Dist | COUNTY | ROUTE | POST MILES TOTAL PROJECT | SHEET No. | TOTAL SHEETS |
|---|---|---|---|---|---|
| 01 | Lak | 53 | 2.8/7.5 | 125 | 217 |

Patrice A. Stafford 3-25-10
REGISTERED CIVIL ENGINEER DATE

6-1-10
PLANS APPROVAL DATE

REGISTERED PROFESSIONAL ENGINEER
PATRICE A. STAFFORD
No. 61256
Exp. 6-30-11
CIVIL
STATE OF CALIFORNIA

*THE STATE OF CALIFORNIA OR ITS OFFICERS OR AGENTS SHALL NOT BE RESPONSIBLE FOR THE ACCURACY OR COMPLETENESS OF SCANNED COPIES OF THIS PLAN SHEET.*

# DRAINAGE QUANTITIES

| DRAINAGE PLAN SHEET No. | POST MILE | DRAINAGE SYSYTEM No. ⬡ | DRAINAGE UNIT ◯ | HDPE PLASTIC PIPELINER (SDR 32.5) 16" OD LF | 22" OD LF | 28" OD LF | 54" REINFORCED CONCRETE PIPE LF | 30" CSP INLET (.109" THICK) LF | REMOVE INLET EA | DITCH EXCAVATION CY | MINOR CONCRETE (BACKFILL) CY | MARKER (CULVERT) EA | ABANDON CULVERT LF | SAND BACKFILL CY | REMOVE STREAM GAGE EA | DESCRIPTION | STATION | DRAINAGE UNIT ◯ | DRAINAGE SYSYTEM No. ⬡ | POST MILE | DRAINAGE PLAN SHEET No. |
|---|---|---|---|---|---|---|---|---|---|---|---|---|---|---|---|---|---|---|---|---|---|
| D-11 | 5.88 | 24 | a | | | | | | | | | | | | | | 315+25.00 | a | 24 | 5.88 | D-11 |
| | | | b | | | | | | | | | | | | | | | b | | | |
| | | | c | | | | | | | | | | | | | | | c | | | |
| | | | d | | | | | | | | | | | | | | | d | | | |
| | | | e | | | | | | | | | | | | | | | e | | | |
| | | | f | | | | | | | 15.00 | | | | | | DITCH EXCAVATION | | f | | | |
| | | | g | | | | | | | | | 2 | | | | CULVERT MARKER | | g | | | |
| D-11 | 5.92 | 25 | a | | | | | | | | | | 89 | 5.8 | | ABANDON CULVERT 18" X 89' | 318+03.17 | a | 25 | 5.92 | D-11 |
| | | | b | | | | | | | | | | | | | | | b | | | |
| | | | c | | | | | | | | | | | | | | | c | | | |
| | | | d | | | | | | | | | | | | | | | d | | | |
| | | | e | | | | | | | | | 2 | | | | CULVERT MARKER | | e | | | |
| | | | f | | | | | | | 8.00 | | | | | | DITCH EXCAVATION | | f | | | |
| | | | g | | | | | | | | | | | | | | | g | | | |
| D-11 | 6.10 | 26 | a | 110 | | | | | | | | | | | | 16" OD PP LINER (HDPE) | 327+20.15 | a | 26 | 6.10 | D-11 |
| | | | b | | | | | | | | | | | | | | | b | | | |
| | | | c | | | | | | | | | | | | | | | c | | | |
| | | | d | | | | | | | | | | | | | | | d | | | |
| | | | e | | | | | | | 8.00 | | | | | | DITCH EXCAVATION | | e | | | |
| | | | f | | | | | | | | | 2 | | | | CULVERT MARKER | | f | | | |
| D-11 | 6.21 | 27 | a | | | 290 | | | | | | | | | | 28" OD PP LINER (HDPE) | 327+87.08 | a | 27 | 6.21 | D-11 |
| | | | b | | | | | | | | | | | | | | | b | | | |
| | | | c | | | | | | | | | | | | | | | c | | | |
| | | | d | | | | | | | 8.00 | | | | | | DITCH EXCAVATION | | d | | | |
| | | | e | | | | | | | | | | | | | | | e | | | |
| | | | f | | | | | | | | | | | | | | | f | | | |
| | | | g | | | | | | | | | 2 | | | | CULVERT MARKER | | g | | | |
| D-12 | 6.43 | 28 | a | | | | | | | | | | | | | INVERT PAVING | 344+74.52 | a | 28 | 6.43 | D-12 |
| | | | b | | | | | | | | | | | | | | | b | | | |
| | | | c | | | | | | | | | | | | | | | c | | | |
| | | | d | | | | | | | | | 2 | | | | CULVERT MARKER | | d | | | |
| SHEET TOTAL | | | | 110 | | 290 | | | | 39 | | 10 | 89 | 5.8 | | | | | | | |

STATE OF CALIFORNIA - DEPARTMENT OF TRANSPORTATION
Caltrans®
NORTH REGION
OFFICE OF DESIGN, SOUTH
DESIGN BRANCH S10

FUNCTIONAL SUPERVISOR: C. OLSON
CALCULATED-DESIGNED BY: P. STAFFORD
CHECKED BY: C. OLSON
REVISED BY
DATE REVISED

06:35 14-JUN-2010 trmikesl 13986uid012.dgn

# DRAINAGE QUANTITIES

DQ-12

LAST REVISION 03-25-10
DATE PLOTTED => 14-JUN-2010
TIME PLOTTED => 06:35

| Dist | COUNTY | ROUTE | POST MILES TOTAL PROJECT | SHEET No. | TOTAL SHEETS |
|---|---|---|---|---|---|
| 01 | Lak | 53 | 2.8/7.5 | 126 | 217 |

Patrice A. Stafford 3-25-10
REGISTERED CIVIL ENGINEER DATE

6-1-10
PLANS APPROVAL DATE

REGISTERED PROFESSIONAL ENGINEER
PATRICE A. STAFFORD
No. 61256
Exp. 6-30-11
CIVIL
STATE OF CALIFORNIA

THE STATE OF CALIFORNIA OR ITS OFFICERS OR AGENTS SHALL NOT BE RESPONSIBLE FOR THE ACCURACY OR COMPLETENESS OF SCANNED COPIES OF THIS PLAN SHEET.

# DRAINAGE QUANTITIES

| DRAINAGE PLAN SHEET No. | POST MILE | DRAINAGE SYSTEM No. ⬡ | DRAINAGE UNIT ◯ | REMOVE CULVERT LF | REMOVE HEADWALL EA | REMOVE WINGWALL EA | ADJUST INLET EA | MINOR Conc (MINOR STRUCTURE) CY | MINOR Conc (Misc Const) CY | PRECAST Conc BOX CULVERT (6'X4') LF | STRUCTURAL CONCRETE BOX CULVERT CY | (N) HEIGHT OF INLET LF | CONCRETE INVERT PAVING CY | ALTERNATIVE PIPE CULVERT 18" LF | 24" LF | 36" LF | 42" LF | 12" CSP (.079" THICK) LF | REMOVE FLARED END SECTION EA | ALTERNATIVE FLARED END SECTION 18" EA | 24" EA | 30" EA | 36" EA | 42" EA | ROCK SLOPE PROTECTION (BACKING No. 1, METHOD B) CY | ROCK SLOPE PROTECTION FABRIC SQYD | MISCELLANEOUS IRON AND STEEL LB | BAR REINFORCING STEEL LB | DESCRIPTION | STATION | DRAINAGE UNIT ◯ | DRAINAGE SYSTEM No. ⬡ | POST MILE | DRAINAGE PLAN SHEET No. |
|---|---|---|---|---|---|---|---|---|---|---|---|---|---|---|---|---|---|---|---|---|---|---|---|---|---|---|---|---|---|---|---|---|---|---|
| D-11 | 6.63 | 29 | a | | | | | | | | | | | | | | | | | | | | | | | | | | | 355+04.00 | a | 29 | 6.63 | D-11 |
| | | | b | | | | | | | | | | | | | | | | | | | | | | | | | | | | b | | | | |
| | | | c | | | | | | | | | | | | | | | | | 1 | | | | | | | | | 18" AFES | | c | | | |
| | | | d | | | | | 1.24 | | | | 4.61 | | | | | | | | | | | | | | | 326 | | DI (TYPE GO) 24-12X GRATE | | d | | | |
| | | | e | 9.40 | | | | | | | | | | | | | | | | | | | | | | | | | REMOVE CULVERT | | e | | | |
| | | | f | | | | | | | | | | | | | | | | 2 | | | | | | | | | | REMOVE FES | | f | | | |
| | | | g | | | | | | | | | | | | | | | | | | | | | | 6.6 | 268 | | | RSP W/ FABRIC | | g | | | |
| | | | h | | | | | | | | | | | | | | | | | | | | | | | | | | | | h | | | | |
| | | | i | | | | | | | | | | | | | | | | | | | | | | | | | | | | i | | | | |
| D-11 | 6.77 | 30 | a | | | | | | | | | | | | | | | | | | | | | | | | | | | 362+01.86 | a | 30 | 6.77 | D-11 |
| | | | b | | | | | | | | | | | | | | | | | | | | | | | | | | | | b | | | | |
| | | | c | | | | | | | | | | | | | | | | | 2 | | | | | | | | | 18" AFES | | c | | | |
| | | | d | | | | | | | | | | | | | | | | | | | | | | 3.3 | 134 | | | RSP W/ FABRIC | | d | | | |
| | | | e | | | | | | | | | | | | | | | | | | | | | | | | | | | | e | | | | |
| | | | f | 23.00 | | | | | | | | | | | | | | | | | | | | | | | | | REMOVE CULVERT | | f | | | |
| | | | g | | | | | | | | | | | | | | | | 2 | | | | | | | | | | REMOVE FES | | g | | | |
| | | | h | | | | | 1.24 | | | | 4.23 | | | | | | | | | | | | | | | 326 | | DI (TYPE GO) 24-12X GRATE | | h | | | |
| | | | i | | | | | | | | | | | 22.4 | | | | | | | | | | | | | | | 24" APC | | i | | | |
| | | | j | | | | | | | | | | | | | | | | | | | | | | | | | | | | j | | | | |
| D-12 | 6.93 | 31 | a | | | | | | | | | | | | | | | | | | | | | | | | | | | 370+74.00 | a | 31 | 6.93 | D-12 |
| | | | b | | | | | | | | | | | | | | | | | | 1 | | | | | | | | 24" AFES | | b | | | |
| | | | c | | | | | | | | | | | | | | | | | | | | | | 11.2 | 360 | | | RSP-SEE DRAINAGE DETAILS | | c | | | |
| | | | d | | | | | | | | | | | | | | | | | | | | | | | | | | | | d | | | |
| | | | e | 10.00 | | | | | | | | | | | | | | | | | | | | | | | | | REMOVE CULVERT | | e | | | |
| | | | f | | | | | 1.2 | | | | | | | | | | | | | | | | | | | 75 | | MINOR CONCRETE (HEAD WALL) | | f | | | |
| | | | g | | | | | | | | | | | | | | | | | | | | | | | | | | | | g | | | |
| D-12 | 7.07 | 32 | a | 67.00 | | | | | | | | | | | | | | | | | | | | | | | | | REMOVE CULVERT | 378+17.92 | a | 32 | 7.07 | D-12 |
| | | | b | | | | | | | | | | | | 74.0 | | | | | | | | | | | | | | 24" APC | | b | | | |
| | | | c | | | | | | | | | | | | | | | | | | | | | | | | | | | | c | | | |
| | | | d | | | | | 1.24 | | | | 5.38 | | | | | | | | | | | | | | | 326 | | DI (TYPE GO) 24-12X GRATE | | d | | | |
| | | | e | 31.00 | | | | | | | | | | | | | | | | | | | | | | | | | REMOVE CULVERT | | e | | | |
| | | | f | | | | | | | | | | | | 32 | | | | | | | | | | | | | | 24" APC | | f | | | |
| | | | g | | | | | | | | | | | | | | | | 2 | | | | | | | | | | REMOVE FES | | g | | | |
| | | | h | | | | | | | | | | | | | | | | | 1 | 1 | | | | | | | | 24" AFES AND 18" AFES | | h | | | |
| | | | i | | | | | | | | | | | | | | | | | | | | | | 11.2 | 360 | | | RSP-SEE DRAINAGE DETAILS | | i | | | |
| | | | j | | | | | | | | | | | | | | | | | | | | | | | | | | | | j | | | |
| | | | k | | | | | | | | | | | | | | | | | | | | | | | | | | | | k | | | |
| SHEET TOTAL | | | | 140.40 | | | | 4.92 | | | | | | 22.4 | 106 | | | | 6 | 4 | 2 | | | | 32.3 | 1122 | 1053 | | | | | | |

(N) - NOT A SEPARATE PAY ITEM, FOR INFORMATION ONLY.

DRAINAGE QUANTITIES

DQ-13

REVISED BY | DATE REVISED
P. STAFFORD | C. OLSON
CALCULATED-DESIGNED BY | CHECKED BY
FUNCTIONAL SUPERVISOR
C. OLSON

STATE OF CALIFORNIA - DEPARTMENT OF TRANSPORTATION
Caltrans
NORTH REGION
OFFICE OF DESIGN, SOUTH
DESIGN BRANCH S10

06:35 14-JUN-2010 trmikesl 13986uid013.dgn

LAST REVISION 03-25-10 | DATE PLOTTED => 14-JUN-2010 | TIME PLOTTED => 06:35

| Dist | COUNTY | ROUTE | POST MILES TOTAL PROJECT | SHEET No. | TOTAL SHEETS |
|---|---|---|---|---|---|
| 01 | Lak | 53 | 2.8/7.5 | 127 | 217 |

Patrice A. Stafford 3-25-10
REGISTERED CIVIL ENGINEER DATE

6-1-10
PLANS APPROVAL DATE

REGISTERED PROFESSIONAL ENGINEER
PATRICE A. STAFFORD
No. 61256
Exp. 6-30-11
CIVIL
STATE OF CALIFORNIA

THE STATE OF CALIFORNIA OR ITS OFFICERS OR AGENTS SHALL NOT BE RESPONSIBLE FOR THE ACCURACY OR COMPLETENESS OF SCANNED COPIES OF THIS PLAN SHEET.

# DRAINAGE QUANTITIES

| DRAINAGE PLAN SHEET No. | POST MILE | DRAINAGE SYSYTEM No. ⬡ | DRAINAGE UNIT ◯ | HDPE PLASTIC PIPELINER (SDR 32.5) 16" OD LF | 22" OD LF | 28" OD LF | 54" REINFORCED CONCRETE PIPE LF | 30" CSP INLET (.109" THICK) LF | REMOVE INLET EA | DITCH EXCAVATION CY | MINOR CONCRETE (BACKFILL) CY | MARKER (CULVERT) EA | ABANDON CULVERT LF | SAND BACKFILL CY | REMOVE STREAM GAGE EA | DESCRIPTION | STATION | DRAINAGE UNIT ◯ | DRAINAGE SYSYTEM No. ⬡ | POST MILE | DRAINAGE PLAN SHEET No. |
|---|---|---|---|---|---|---|---|---|---|---|---|---|---|---|---|---|---|---|---|---|---|
| D-11 | 6.63 | 29 | a | 65.00 | | | | | | | | | | | | 16" OD PP LINER (HDPE) | 355+04.00 | a | 29 | 6.63 | D-11 |
| | | | b | | | | | | 1 | | | | | | | REMOVE DRAINAGE INLET | | b | | | |
| | | | c | | | | | | | | | | | | | | | c | | | |
| | | | d | | | | | | | | | | | | | | | d | | | |
| | | | e | | | | | | | | | | | | | | | e | | | |
| | | | f | | | | | | | | | | | | | | | f | | | |
| | | | g | | | | | | | | | | | | | | | g | | | |
| | | | h | | | | | | | 8.00 | | | | | | DITCH EXCAVATION | | h | | | |
| | | | i | | | | | | | | | 2 | | | | CULVERT MARKER | | i | | | |
| D-11 | 6.77 | 30 | a | 64.00 | | | | | | | | | | | | 16" OD PP LINER (HDPE) | 362+01.86 | a | 30 | 6.77 | |
| | | | b | | | | | | 1 | | | | | | | REMOVE DRAINAGE INLET | | b | | | D-11 |
| | | | c | | | | | | | | | | | | | | | c | | | |
| | | | d | | | | | | | | | | | | | | | d | | | |
| | | | e | | | | | | | 8.00 | | | | | | DITCH EXCAVATION | | e | | | |
| | | | f | | | | | | | | | | | | | | | f | | | |
| | | | g | | | | | | | | | | | | | | | g | | | |
| | | | h | | | | | | | | | | | | | | | h | | | |
| | | | i | | | | | | | | | | | | | | | i | | | |
| | | | j | | | | | | | | | 2 | | | | CULVERT MARKER | | j | | | |
| D-12 | 6.93 | 31 | a | | 340.00 | | | | | | | | | | | 22" OD PP LINER (HDPE) | 370+74.00 | a | 31 | 6.93 | D-12 |
| | | | b | | | | | | | | | | | | | | | b | | | |
| | | | c | | | | | | | | | | | | | | | c | | | |
| | | | d | | | | | | | 8.00 | | | | | | DITCH EXCAVATION | | d | | | |
| | | | e | | | | | | | | | | | | | | | e | | | |
| | | | f | | | | | | | | | | | | | | | f | | | |
| | | | g | | | | | | | | | 2 | | | | CULVERT MARKER | | g | | | |
| D-12 | 7.07 | 32 | a | | | | | | | | | | | | | | 378+17.92 | a | 32 | 7.07 | D-12 |
| | | | b | | | | | | | | 161.4 | | | | | MINOR CONCRETE (BACKFILL) | | b | | | |
| | | | c | | | | | | 1 | | | | | | | REMOVE DRAINAGE INLET | | c | | | |
| | | | d | | | | | | | | | | | | | | | d | | | |
| | | | e | | | | | | | | | | | | | | | e | | | |
| | | | f | | | | | | | | | | | | | | | f | | | |
| | | | g | | | | | | | | | | | | | | | g | | | |
| | | | h | | | | | | | | | | | | | | | h | | | |
| | | | i | | | | | | | | | | | | | | | i | | | |
| | | | j | | | | | | | 8.00 | | | | | | DITCH EXCAVATION | | j | | | |
| | | | k | | | | | | | | | 2 | | | | CULVERT MARKER | | k | | | |
| SHEET TOTAL | | | | 129.00 | 340.00 | | | | 3 | 32.00 | 161.4 | 8 | | | | | | | | | |

# DRAINAGE QUANTITIES
## DQ-14

| REVISED BY | DATE REVISED |
|---|---|
| | |

| CALCULATED-DESIGNED BY | CHECKED BY | FUNCTIONAL SUPERVISOR |
|---|---|---|
| P. STAFFORD | C. OLSON | C. OLSON |

STATE OF CALIFORNIA - DEPARTMENT OF TRANSPORTATION
Caltrans
NORTH REGION
OFFICE OF DESIGN, SOUTH
DESIGN BRANCH S10

06135 14-JUN-2010 trmikesl 13986uid014.dgn

LAST REVISION 03-25-10 | DATE PLOTTED => 14-JUN-2010 | TIME PLOTTED => 06:35

| Dist | COUNTY | ROUTE | POST MILES TOTAL PROJECT | SHEET No. | TOTAL SHEETS |
|---|---|---|---|---|---|
| 01 | Lak | 53 | 2.8/7.5 | 128 | 217 |

Patrice A. Stafford 3-25-10
REGISTERED CIVIL ENGINEER DATE

6-1-10
PLANS APPROVAL DATE

REGISTERED PROFESSIONAL ENGINEER
PATRICE A. STAFFORD
No. 61256
Exp. 6-30-11
CIVIL
STATE OF CALIFORNIA

THE STATE OF CALIFORNIA OR ITS OFFICERS OR AGENTS SHALL NOT BE RESPONSIBLE FOR THE ACCURACY OR COMPLETENESS OF SCANNED COPIES OF THIS PLAN SHEET.

# DRAINAGE QUANTITIES

| DRAINAGE PLAN SHEET No. | POST MILE | DRAINAGE SYSTEM No. ⬡ | DRAINAGE UNIT ◯ | REMOVE CULVERT | REMOVE HEADWALL | REMOVE WINGWALL | ADJUST INLET | MINOR Conc (MINOR STRUCTURE) | MINOR Conc (Misc Const) | PRECAST Conc BOX CULVERT (6'X4') | STRUCTURAL CONCRETE BOX CULVERT | (N) HEIGHT OF INLET | CONCRETE INVERT PAVING | ALTERNATIVE PIPE CULVERT 18" | ALTERNATIVE PIPE CULVERT 24" | ALTERNATIVE PIPE CULVERT 36" | ALTERNATIVE PIPE CULVERT 42" | 12" CSP (.079" THICK) | REMOVE FLARED END SECTION | ALTERNATIVE FLARED END SECTION 18" | ALTERNATIVE FLARED END SECTION 24" | ALTERNATIVE FLARED END SECTION 30" | ALTERNATIVE FLARED END SECTION 36" | ALTERNATIVE FLARED END SECTION 42" | ROCK SLOPE PROTECTION (BACKING No. 1, METHOD B) | ROCK SLOPE PROTECTION FABRIC | MISCELLANEOUS IRON AND STEEL | BAR REINFORCING STEEL | DESCRIPTION | STATION | DRAINAGE UNIT ◯ | DRAINAGE SYSTEM No. ⬡ | POST MILE | DRAINAGE PLAN SHEET No. |
|---|---|---|---|---|---|---|---|---|---|---|---|---|---|---|---|---|---|---|---|---|---|---|---|---|---|---|---|---|---|---|---|---|---|---|
| | | | | LF | EA | EA | EA | CY | CY | LF | CY | LF | CY | LF | LF | LF | LF | LF | EA | EA | EA | EA | EA | EA | CY | SQYD | LB | LB | | | | | | |
| D-13 | 7.19 | 33 | a | 53.0 | | | | | | | | | | | | | | | | | | | | | | | | | REMOVE CULVERT | 384+32.46 | a | 33 | 7.19 | D-13 |
| | | | b | | | | | | | | | | | | 62.0 | | | | | | | | | | | | | | 24" APC | | b | | | |
| | | | c | | | | | | | | | | | | | | | | | | 1 | | | | | | | | 24" AFES | | c | | | |
| | | | d | | | | | | | | | | | | | | | | | | | | | | 11.2 | 360 | | | RSP-SEE DRAINAGE DETAIL | | d | | | |
| | | | e | | | | | | | | | | | | | | | | | | | | | | | | | | | | e | | | |
| | | | f | | | | | | | | | | | | | | | | | | | | | | | | | | | | f | | | |
| SHEET TOTAL | | | | 53.0 | | | | | | | | | | | 62.0 | | | | | | 1 | | | | 11.2 | 360 | | | | | | | | |
| SHEET DQ-1 TOTAL | | | | 76.5 | | | 2 | 2.58 | 1.23 | | | | | | 63.0 | | | 10 | 6 | 1 | 1 | 3 | | | 17.4 | 534 | 652 | | | | | | | SHEET DQ-1 TOTAL |
| SHEET DQ-3 TOTAL | | | | 137.8 | | | 2 | 0.95 | 1.23 | | | | | | 160.4 | 110.6 | | | 5 | | 4 | | 1 | | 23.2 | 612 | 326 | | | | | | | SHEET DQ-3 TOTAL |
| SHEET DQ-5 TOTAL | | | | 118.1 | 2 | 2 | | 36.60 | | | 109.3 | | | | 115.0 | 92.1 | | | 6 | | 4 | | 2 | | 17.6 | 432 | | 26,975 | | | | | | SHEET DQ-5 TOTAL |
| SHEET DQ-7 TOTAL | | | | 402.4 | 2 | | | 7.72 | 1.23 | 119.6 | | | | 39.8 | 225.3 | | | | 2 | 2 | 3 | | | | 5.6 | 180 | 978 | | | | | | | SHEET DQ-7 TOTAL |
| SHEET DQ-9 TOTAL | | | | 96.0 | | | | 2.48 | | | | | | 76.0 | 99.0 | | | | 6 | 4 | 3 | | | | 27.8 | 808 | 652 | | | | | | | SHEET DQ-9 TOTAL |
| SHEET DQ-11 TOTAL | | | | 20.0 | | | | 4.00 | | | | | 4.52 | 20.0 | 208.2 | | 31.0 | | 6 | 2 | 2 | 1 | | 2 | 42.3 | 1200 | 742 | | | | | | | SHEET DQ-11 TOTAL |
| SHEET DQ-13 TOTAL | | | | 140.4 | | | | 4.92 | | | | | | 22.4 | 106.0 | | | | 6 | 4 | 2 | | | | 32.3 | 1122 | 1053 | | | | | | | SHEET DQ-13 TOTAL |
| GRAND TOTAL | | | | 1044.2 | 4[2] | 2[2] | 4 | 59.25 | 3.69 | 119.6 | 109.3[2] | | 4.52 | 158.2 | 1038.9 | 202.7 | 31.0 | 10 | 37 | 13 | 20 | 4 | 3 | 2 | 177.4 | 5248[1] | 4403 | 26,975[2] | | | | | | GRAND TOTAL |

(N) - NOT A SEPARATE PAY ITEM, FOR INFORMATION ONLY.

[1] FOR ITEM TOTAL, SEE HMA OVERSIDE DRAIN ITEMS TABLE

[2] FOR ITEM TOTAL, SEE ROADWAY QUANTITIES TABLE

REVISED BY | DATE REVISED

P. STAFFORD | C. OLSON

CALCULATED-DESIGNED BY | CHECKED BY

FUNCTIONAL SUPERVISOR: C. OLSON

STATE OF CALIFORNIA - DEPARTMENT OF TRANSPORTATION
Caltrans
NORTH REGION
OFFICE OF DESIGN, SOUTH
DESIGN BRANCH S10

06:35 14-JUN-2010 trmikesl 13986uid015.dgn

## DRAINAGE QUANTITIES

## DQ-15

LAST REVISION 03-25-10 | DATE PLOTTED => 14-JUN-2010 | TIME PLOTTED => 06:35

BORDER LAST REVISED 4/11/2008 | RELATIVE BORDER SCALE IS IN INCHES 0 1 2 3 | USERNAME => trmikesl | DGN FILE => 13986uid015.dgn | CU 03260 | EA 3986U1

| Dist | COUNTY | ROUTE | POST MILES TOTAL PROJECT | SHEET No. | TOTAL SHEETS |
|---|---|---|---|---|---|
| 01 | Lak | 53 | 2.8/7.5 | 129 | 217 |

Patrice A. Stafford 3-25-10
REGISTERED CIVIL ENGINEER DATE

6-1-10
PLANS APPROVAL DATE

REGISTERED PROFESSIONAL ENGINEER
PATRICE A. STAFFORD
No. 61256
Exp. 6-30-11
CIVIL
STATE OF CALIFORNIA

*THE STATE OF CALIFORNIA OR ITS OFFICERS OR AGENTS SHALL NOT BE RESPONSIBLE FOR THE ACCURACY OR COMPLETENESS OF SCANNED COPIES OF THIS PLAN SHEET.*

# DRAINAGE QUANTITIES

| DRAINAGE PLAN SHEET No. | POST MILE | DRAINAGE SYSYTEM No. ⬡ | DRAINAGE UNIT ◯ | HDPE PLASTIC PIPELINER (SDR 32.5) 16" OD LF | 22" OD LF | 28" OD LF | 54" REINFORCED CONCRETE PIPE LF | 30" CSP INLET (.109" THICK) LF | REMOVE INLET EA | DITCH EXCAVATION CY | MINOR CONCRETE (BACKFILL) CY | MARKER (CULVERT) EA | ABANDON CULVERT LF | SAND BACKFILL CY | REMOVE STREAM GAGE EA | DESCRIPTION | STATION | DRAINAGE UNIT ◯ | DRAINAGE SYSYTEM No. ⬡ | POST MILE | DRAINAGE PLAN SHEET No. |
|---|---|---|---|---|---|---|---|---|---|---|---|---|---|---|---|---|---|---|---|---|---|
| D-13 | 7.19 | 33 | a | | | | | | | | | | | | | | 384+32.46 | a | 33 | 7.19 | D-13 |
| | | | b | | | | | | | | 143 | | | | | MINOR CONCRETE (BACKFILL) | | b | | | |
| | | | c | | | | | | | | | | | | | | | c | | | |
| | | | d | | | | | | | | | | | | | | | d | | | |
| | | | e | | | | | | | 8 | | | | | | DITCH EXCAVATION | | e | | | |
| | | | f | | | | | | | | | 2 | | | | CULVERT MARKER | | f | | | |
| SHEET TOTAL | | | | | | | | | | 8 | 143 | 2 | | | | | | | | | |
| SHEET DQ-2 TOTAL | | | | 127 | | 402 | | 14 | 3 | 20 | 91.6 | 10 | | | | | | SHEET DQ-2 TOTAL | | | |
| SHEET DQ-4 TOTAL | | | | | 192 | | | | 1 | | 312.5 | 8 | | | | | | SHEET DQ-4 TOTAL | | | |
| SHEET DQ-6 TOTAL | | | | | 139 | | 173 | | | 32 | 136 | 10 | | | 1 | | | SHEET DQ-6 TOTAL | | | |
| SHEET DQ-8 TOTAL | | | | | | | | | 3 | 24 | 232.1 | 8 | | | | | | SHEET DQ-8 TOTAL | | | |
| SHEET DQ-10 TOTAL | | | | 298 | 152 | | | | 2 | 47 | 98.9 | 10 | | | | | | SHEET DQ-10 TOTAL | | | |
| SHEET DQ-12 TOTAL | | | | 110 | | 290 | | | | 39 | | 10 | 89 | 5.8 | | | | SHEET DQ-12 TOTAL | | | |
| SHEET DQ-14 TOTAL | | | | 129 | 340 | | | | 3 | 32 | 161.4 | 8 | | | | | | SHEET DQ-14 TOTAL | | | |
| GRAND TOTAL | | | | 664 | 823 | 692 | 173 | 14 | 12 | 202* | 1175.5 | 66 | 89 | 5.8 | 1 | | | GRAND TOTAL | | | |

* FOR ITEM TOTAL, SEE ROADWAY QUANTITIES TABLE

CALCULATED-DESIGNED BY: P. STAFFORD
CHECKED BY: C. OLSON
REVISED BY
DATE REVISED
FUNCTIONAL SUPERVISOR: C. OLSON

STATE OF CALIFORNIA - DEPARTMENT OF TRANSPORTATION
Caltrans
NORTH REGION
OFFICE OF DESIGN, SOUTH
DESIGN BRANCH S10

06:35 14-JUN-2010 trmikesl 13986uid016.dgn

## DRAINAGE QUANTITIES

## DQ-16

LAST REVISION 03-25-10
DATE PLOTTED => 14-JUN-2010
TIME PLOTTED => 06:35

| Dist | COUNTY | ROUTE | POST MILES TOTAL PROJECT | SHEET No. | TOTAL SHEETS |
|---|---|---|---|---|---|
| 01 | Lak | 53 | 2.8/7.5 | 130 | 217 |

Patrice A. Stafford 3-25-10
REGISTERED CIVIL ENGINEER DATE

6-1-10
PLANS APPROVAL DATE

REGISTERED PROFESSIONAL ENGINEER
PATRICE A. STAFFORD
No. 61256
Exp. 6-30-11
CIVIL
STATE OF CALIFORNIA

THE STATE OF CALIFORNIA OR ITS OFFICERS OR AGENTS SHALL NOT BE RESPONSIBLE FOR THE ACCURACY OR COMPLETENESS OF SCANNED COPIES OF THIS PLAN SHEET.

## HMA OVERSIDE DRAIN ITEMS

| STATION | DESCRIPTION | SIDE (Lt OR Rt) | (N) HMA OVERSIDE DRAIN | (N) ROCK SLOPE PROTECTION (BACKING No. 2, METHOD B) | PLACE HOT MIX ASPHALT (Misc AREA) | HOT MIX ASPHALT | ROCK SLOPE PROTECTION (BACKING No. 2, METHOD B) | ROCK SLOPE PROTECTION FABRIC |
|---|---|---|---|---|---|---|---|---|
| | | | LF | LF | SQYD | TON | CY | SQYD |
| "JJ1" 184+50 | OVERSIDE DRAIN | Rt | 7.5 | N/A | 2.8 | 0.47 | | |
| "JJ1" 209+40 | OVERSIDE DRAIN | Rt | 10.0 | N/A | 3.7 | 0.62 | | |
| "JJ1" 219+50 | OVERSIDE DRAIN W/RSP | Lt | 10.0 | 30.0 | 3.7 | 0.62 | 6.2 | 22.5 |
| "JJ1" 222+50 | OVERSIDE DRAIN W/RSP | Lt | 20.0 | 30.0 | 7.4 | 1.25 | 6.2 | 22.5 |
| "JJ1" 239+00 | OVERSIDE DRAIN | Lt | 5.0 | N/A | 1.9 | 0.32 | | |
| "JJ1" 244+40 | OVERSIDE DRAIN W/RSP | Lt | 31.0 | 54.0 | 11.4 | 1.92 | 11.0 | 40.5 |
| "JJ1" 257+50 | OVERSIDE DRAIN W/RSP | Lt | 5.0 | 3.0 | 1.9 | 0.32 | 0.7 | 2.3 |
| "JJ1" 259+00 | OVERSIDE DRAIN W/RSP | Rt | 8.5 | 4.5 | 3.2 | 0.54 | 1.0 | 3.4 |
| "JJ1" 266+00 | OVERSIDE DRAIN | Lt | 9.0 | N/A | 3.3 | 0.56 | | |
| "JJ1" 268+50 | OVERSIDE DRAIN | Rt | 16.0 | N/A | 5.9 | 1.00 | | |
| "JJ1" 272+80 | OVERSIDE DRAIN | Rt | 15.0 | N/A | 5.5 | 0.93 | | |
| "JJ1" 287+60 | OVERSIDE DRAIN W/RSP | Rt | 13.0 | 4.5 | 4.8 | 0.81 | 1.0 | 3.4 |
| "JJ1" 296+10 | OVERSIDE DRAIN W/RSP | Rt | 10.0 | 4.5 | 3.7 | 0.62 | 1.0 | 3.4 |
| "JJ1" 301+00 | OVERSIDE DRAIN W/RSP | Rt | 12.0 | 3.0 | 4.4 | 0.74 | 0.7 | 2.3 |
| "JJ1" 309+00 | OVERSIDE DRAIN | Lt | 10.0 | N/A | 3.7 | 0.62 | | |
| "JJ1" 319+10 | OVERSIDE DRAIN W/RSP | Lt | 6.0 | 4.0 | 2.2 | 0.37 | 0.9 | 3.0 |
| "JJ1" 319+70 | OVERSIDE DRAIN W/RSP | Rt | 8.0 | 7.0 | 3.0 | 0.51 | 1.5 | 5.3 |
| "JJ1" 328+65 | OVERSIDE DRAIN W/RSP | Rt | 17.0 | 15.0 | 6.3 | 1.06 | 3.1 | 11.3 |
| "JJ1" 329+50 | OVERSIDE DRAIN | Lt | 4.0 | N/A | 1.5 | 0.25 | | |
| "JJ1" 336+30 | OVERSIDE DRAIN | Lt | 5.0 | N/A | 1.9 | 0.32 | | |
| "JJ1" 336+30 | OVERSIDE DRAIN | Rt | 5.0 | N/A | 1.9 | 0.32 | | |
| "JJ1" 347+50 | OVERSIDE DRAIN | Rt | 6.0 | N/A | 2.2 | 0.37 | | |
| "JJ1" 348+00 | OVERSIDE DRAIN | Lt | 12.3 | N/A | 4.6 | 0.78 | | |
| "JJ1" 363+40 | OVERSIDE DRAIN | Rt | 5.0 | N/A | 1.9 | 0.32 | | |
| "JJ1" 382+30 | OVERSIDE DRAIN | Rt | 6.0 | N/A | 2.2 | 0.37 | | |
| "JJ1" 393+50 | OVERSIDE DRAIN W/RSP | Rt | 19.0 | 12.0 | 7.0 | 1.18 | 2.5 | 9.0 |
| | FROM DRAINAGE QUANTITIES | | | | | | | 5248.0 |
| | FROM DITCH ITEMS | | | | | | 475.0 | 1597.0 |
| TOTAL | | | | | 102.0 | 17.19* | 510.8 | 6854.9* |

(N) - NOT A SEPARATE PAY ITEM, FOR INFORMATION ONLY.

*FOR ITEM TOTAL, SEE ROADWAY QUANTITIES TABLE.

## DITCH ITEMS

| STATION LIMITS | ROCK SLOPE PROTECTION (BACKING No. 2, METHOD B) | ROCK SLOPE PROTECTION (1/4 TON, METHOD B) | ROCK SLOPE PROTECTION FABRIC | DITCH EXCAVATION |
|---|---|---|---|---|
| | CY | CY | SQYD | CY |
| "JJ1" 266+00 TO 277+25 (Lt) | 96.0 | | 450 | |
| "JJ1" 272+50 TO 277+50 (Rt) | 74.0 | | 281 | |
| "JJ1" 317+70 TO 318+20 (Rt) | 248.0 | 31 | 564 | |
| "JJ1" 362+00 TO 365+05 (Lt) | 57.0 | | 302 | 99.3 |
| TOTAL | 475.0[2] | 31[1] | 1597[2] | 99.3[1] |

[1]FOR ITEM TOTAL, SEE ROADWAY QUANTITIES TABLE.
[2]FOR ITEM TOTAL, SEE HMA OVERSIDE DRAIN ITEMS TABLE.

## ALTERNATIVE PIPE CULVERTS

| DESIGNATION | ALLOWABLE PIPE MATERIAL AND PROTECTION | | | | | | |
|---|---|---|---|---|---|---|---|
| | RCP | CSP | | GALVANIZED, POLYMERIC SHEET COATED CSP | | HDPP | |
| | SIZE | SIZE | THICKNESS | SIZE | THICKNESS | SIZE | SMOOTH INTERIOR WALL TYPE |
| | in | in | in | in | in | in | |
| 18" APC | 18 | 18 | 0.138 | 18 | 0.079 | 18 | YES |
| 24" APC | 24 | 24 | 0.138 | 24 | 0.079 | 24 | YES |
| 36" APC | 36 | 36 | 0.138 | 36 | 0.079 | 36 | YES |
| 42" APC | 42 | 42 | 0.138 | 92 | 0.079 | 42 | YES |

# DRAINAGE QUANTITIES

DQ-17

REVISED BY | DATE REVISED
P. STAFFORD | C. OLSON
CALCULATED-DESIGNED BY | CHECKED BY
FUNCTIONAL SUPERVISOR
C. OLSON

STATE OF CALIFORNIA - DEPARTMENT OF TRANSPORTATION
Caltrans
NORTH REGION
OFFICE OF DESIGN, SOUTH
DESIGN BRANCH S10

06:35 14-JUN-2010 trmikesl 13986uid017.dgn

LAST REVISION 03-25-10 | DATE PLOTTED => 14-JUN-2010 | TIME PLOTTED => 06:35

| Dist | COUNTY | ROUTE | POST MILES TOTAL PROJECT | SHEET No. | TOTAL SHEETS |
|---|---|---|---|---|---|
| 01 | Lak | 53 | 2.8/7.5 | 131 | 217 |

Patrice A. Stafford 3-25-10
REGISTERED CIVIL ENGINEER DATE

6-1-10
PLANS APPROVAL DATE

REGISTERED PROFESSIONAL ENGINEER
PATRICE A. STAFFORD
No. 61256
Exp. 6-30-11
CIVIL
STATE OF CALIFORNIA

*THE STATE OF CALIFORNIA OR ITS OFFICERS OR AGENTS SHALL NOT BE RESPONSIBLE FOR THE ACCURACY OR COMPLETENESS OF SCANNED COPIES OF THIS PLAN SHEET.*

NOTES:

1. FOR ACCURATE RIGHT OF WAY DATA, CONTACT RIGHT OF WAY ENGINEERING AT THE DISTRICT OFFICE.
2. LOCATION OF UTILITY FACILITIES SHOWN ON THESE PLANS ARE APPROXIMATE AND SHALL BE VERIFIED BY THE CONTRACTOR PRIOR TO CONSTRUCTION.
3. UTILITY OWNERSHIP ON THIS PROJECT:
   GAS: PG&E
   WATER: GOLDEN STATE WATER,
   HIGHLANDS WATER COMPANY,
   KONOCTI COUNTY WATER DISTRICT
   ELECTRIC: PG&E
   TELEPHONE: PACIFIC BELL UKIAH
   SEWER: LAKE COUNTY SANITATION
   CABLE: MEDIACOM CLEARLAKE OAKS
   CALL BOX: LAKE COUNTY SAFE.
4. ALL ELEVATIONS SHOWN REFER TO TOP OF PIPE ELEVATION UNLESS OTHERWISE INDICATED.

LEGEND

| | |
|---|---|
| ——--s—— | EXISTING SEWERLINE |
| -——w—— | EXISTING WATERLINE |
| | EXISTING POWER POLE |
| | CALL BOX |

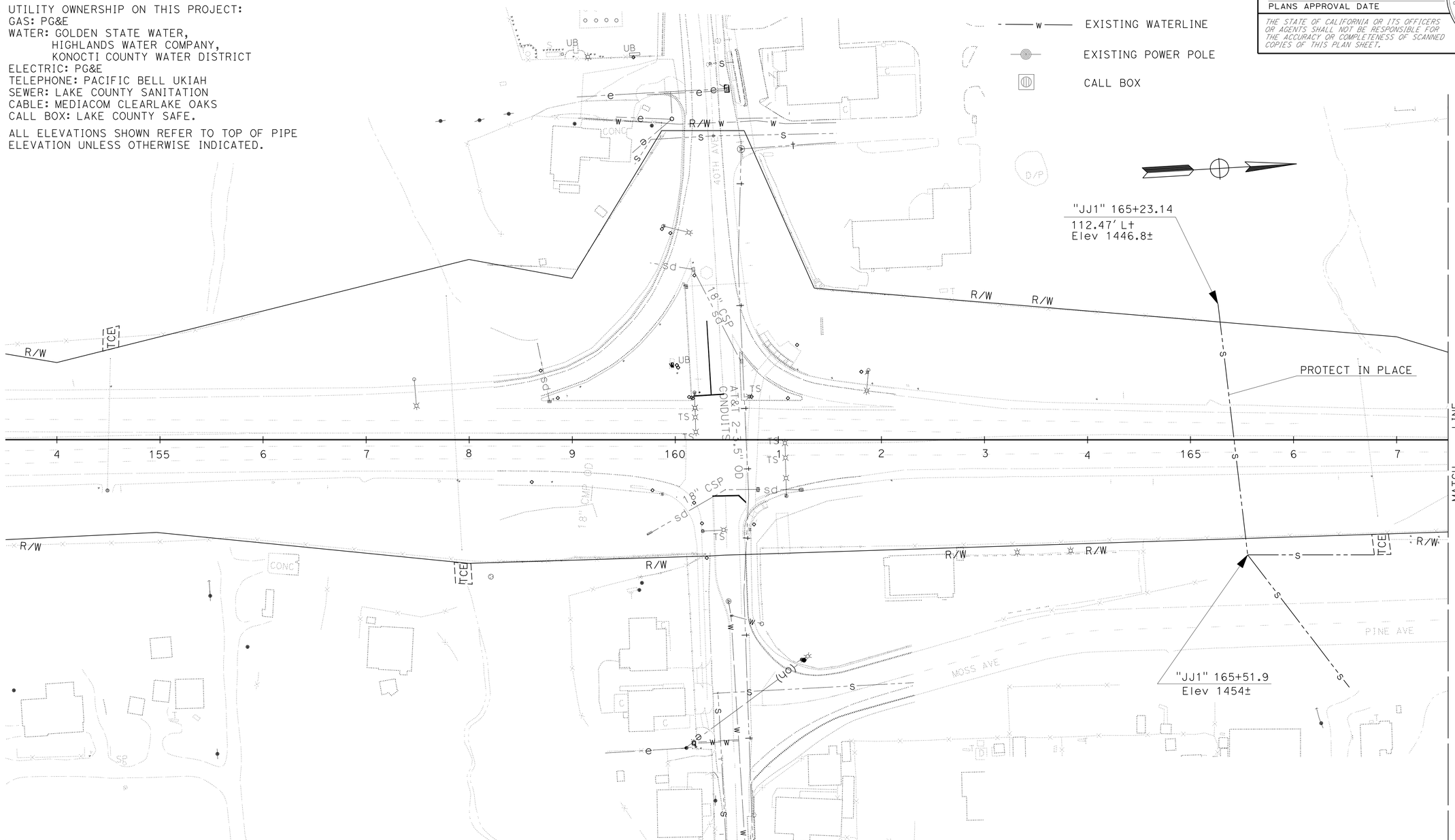


# UTILITY PLAN

SCALE: 1" = 50'

U-1

THIS PLAN ACCURATE FOR UTILITY INFORMATION ONLY

STATE OF CALIFORNIA - DEPARTMENT OF TRANSPORTATION
NORTH REGION
OFFICE OF DESIGN, SOUTH
DESIGN BRANCH S10

FUNCTIONAL SUPERVISOR: C. OLSON
CALCULATED-DESIGNED BY: P. STAFFORD
CHECKED BY: C. OLSON
REVISED BY
DATE REVISED

06:35 14-JUN-2010 trmikesl 13986uka001.dgn

LAST REVISION 03-25-10
DATE PLOTTED => 14-JUN-2010
TIME PLOTTED => 06:35

BORDER LAST REVISED 4/11/2008
RELATIVE BORDER SCALE IS IN INCHES 0 1 2 3
USERNAME => trmikesl
DGN FILE => 13986uka001.dgn
CU 03260
EA 3986U1

| Dist | COUNTY | ROUTE | POST MILES TOTAL PROJECT | SHEET No. | TOTAL SHEETS |
|---|---|---|---|---|---|
| 01 | Lak | 53 | 2.8/7.5 | 132 | 217 |

Patrice A. Stafford 3-25-10
REGISTERED CIVIL ENGINEER DATE

6-1-10
PLANS APPROVAL DATE

REGISTERED PROFESSIONAL ENGINEER
PATRICE A. STAFFORD
No. 61256
Exp. 6-30-11
CIVIL
STATE OF CALIFORNIA

*THE STATE OF CALIFORNIA OR ITS OFFICERS OR AGENTS SHALL NOT BE RESPONSIBLE FOR THE ACCURACY OR COMPLETENESS OF SCANNED COPIES OF THIS PLAN SHEET.*

**NOTE:**

FOR ACCURATE RIGHT OF WAY DATA, CONTACT
RIGHT OF WAY ENGINEERING AT THE DISTRICT OFFICE.

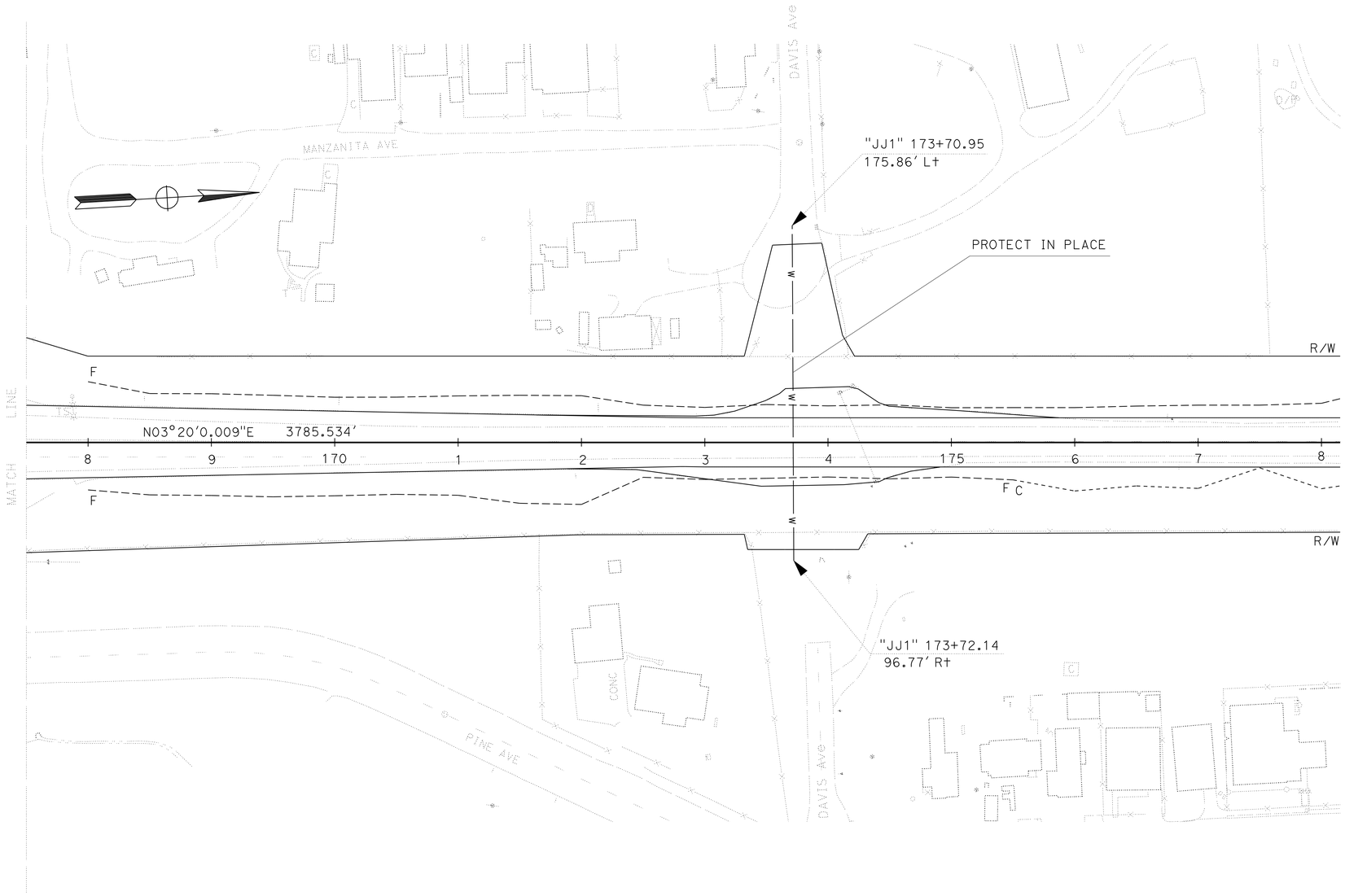


THIS PLAN ACCURATE FOR UTILITY INFORMATION ONLY

# UTILITY PLAN

SCALE: 1" = 50'

U-2

| REVISED BY | DATE REVISED |
|---|---|
| | |

CALCULATED-DESIGNED BY: P. STAFFORD
CHECKED BY: C. OLSON
FUNCTIONAL SUPERVISOR: C. OLSON

STATE OF CALIFORNIA - DEPARTMENT OF TRANSPORTATION
Caltrans
NORTH REGION
OFFICE OF DESIGN, SOUTH
DESIGN BRANCH S10

06:35 14-JUN-2010 trmikesl 13986ukq002.dgn

LAST REVISION 03-25-10 | DATE PLOTTED => 14-JUN-2010 | TIME PLOTTED => 06:35

BORDER LAST REVISED 4/11/2008 | RELATIVE BORDER SCALE IS IN INCHES 0 1 2 3 | USERNAME => trmikesl | DGN FILE => 13986ukq002.dgn | CU 03260 | EA 3986U1

| Dist | COUNTY | ROUTE | POST MILES TOTAL PROJECT | SHEET No. | TOTAL SHEETS |
|---|---|---|---|---|---|
| 01 | Lak | 53 | 2.8/7.5 | 133 | 217 |

Patrice A. Stafford 3-25-10
REGISTERED CIVIL ENGINEER DATE

6-1-10
PLANS APPROVAL DATE

REGISTERED PROFESSIONAL ENGINEER
PATRICE A. STAFFORD
No. 61256
Exp. 6-30-11
CIVIL
STATE OF CALIFORNIA

*THE STATE OF CALIFORNIA OR ITS OFFICERS OR AGENTS SHALL NOT BE RESPONSIBLE FOR THE ACCURACY OR COMPLETENESS OF SCANNED COPIES OF THIS PLAN SHEET.*

**NOTE:**

FOR ACCURATE RIGHT OF WAY DATA, CONTACT
RIGHT OF WAY ENGINEERING AT THE DISTRICT OFFICE.

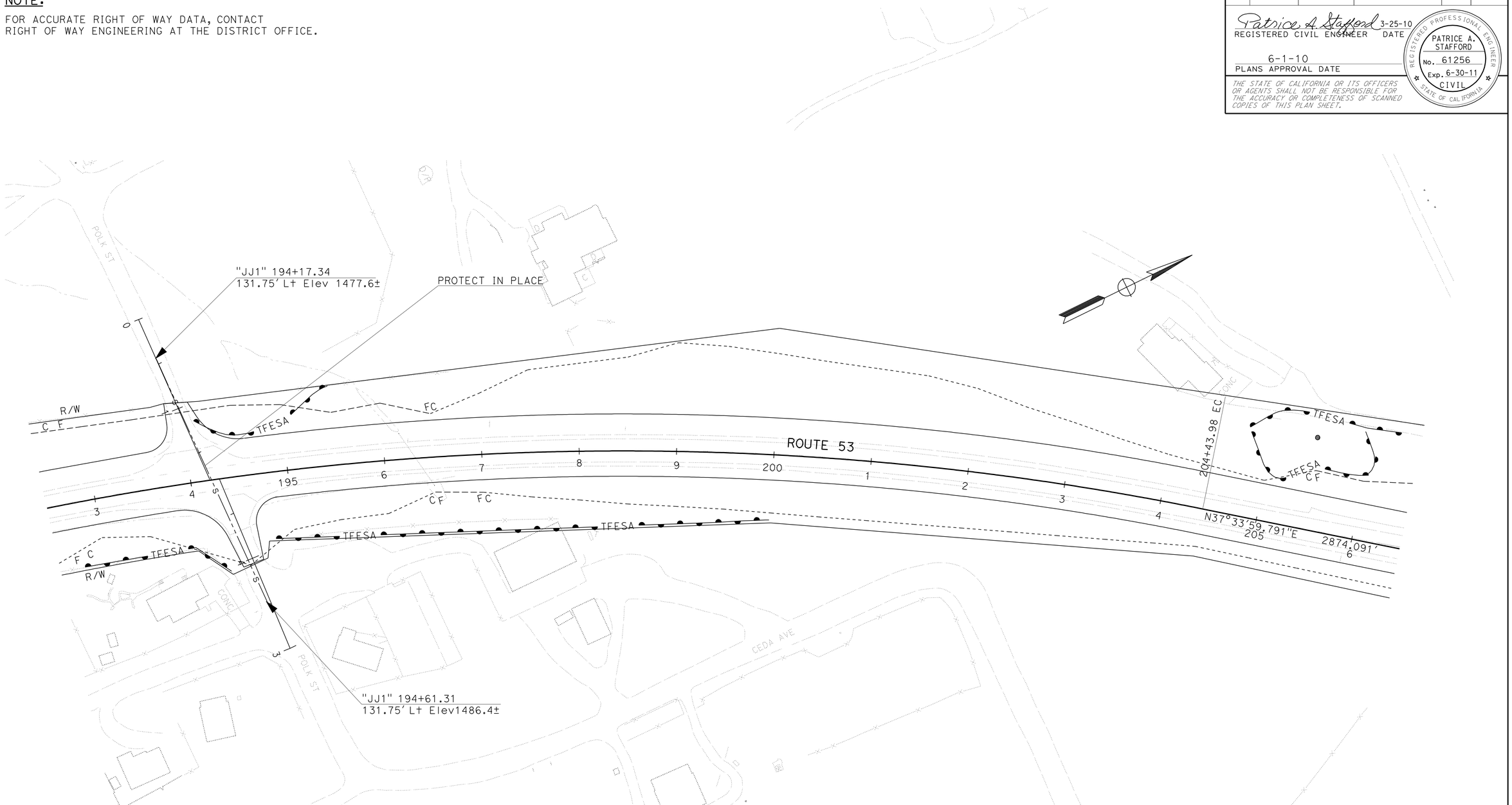


# UTLITY PLAN

SCALE: 1" = 50'

**U-3**

THIS PLAN ACCURATE FOR UTILITY INFORMATION ONLY

| | |
|---|---|
| REVISED BY | P. STAFFORD |
| DATE REVISED | |
| CALCULATED-DESIGNED BY | C. OLSON |
| CHECKED BY | |
| FUNCTIONAL SUPERVISOR | C. OLSON |

STATE OF CALIFORNIA - DEPARTMENT OF TRANSPORTATION
Caltrans
NORTH REGION
OFFICE OF DESIGN, SOUTH
DESIGN BRANCH S10

06:36 14-JUN-2010 trmikesl 13986uka003.dgn

LAST REVISION 03-25-10
DATE PLOTTED => 14-JUN-2010
TIME PLOTTED => 06:36

BORDER LAST REVISED 4/11/2008

RELATIVE BORDER SCALE IS IN INCHES 0 1 2 3

USERNAME => trmikesl
DGN FILE => 13986uka003.dgn

CU 03260

EA 3986U1

| Dist | COUNTY | ROUTE | POST MILES TOTAL PROJECT | SHEET No. | TOTAL SHEETS |
|---|---|---|---|---|---|
| 01 | Lak | 53 | 2.8/7.5 | 134 | 217 |

Patrice A. Stafford 3-25-10
REGISTERED CIVIL ENGINEER DATE

6-1-10
PLANS APPROVAL DATE

REGISTERED PROFESSIONAL ENGINEER
PATRICE A. STAFFORD
No. 61256
Exp. 6-30-11
CIVIL
STATE OF CALIFORNIA

*THE STATE OF CALIFORNIA OR ITS OFFICERS OR AGENTS SHALL NOT BE RESPONSIBLE FOR THE ACCURACY OR COMPLETENESS OF SCANNED COPIES OF THIS PLAN SHEET.*

**NOTE:**

FOR ACCURATE RIGHT OF WAY DATA, CONTACT
RIGHT OF WAY ENGINEERING AT THE DISTRICT OFFICE.

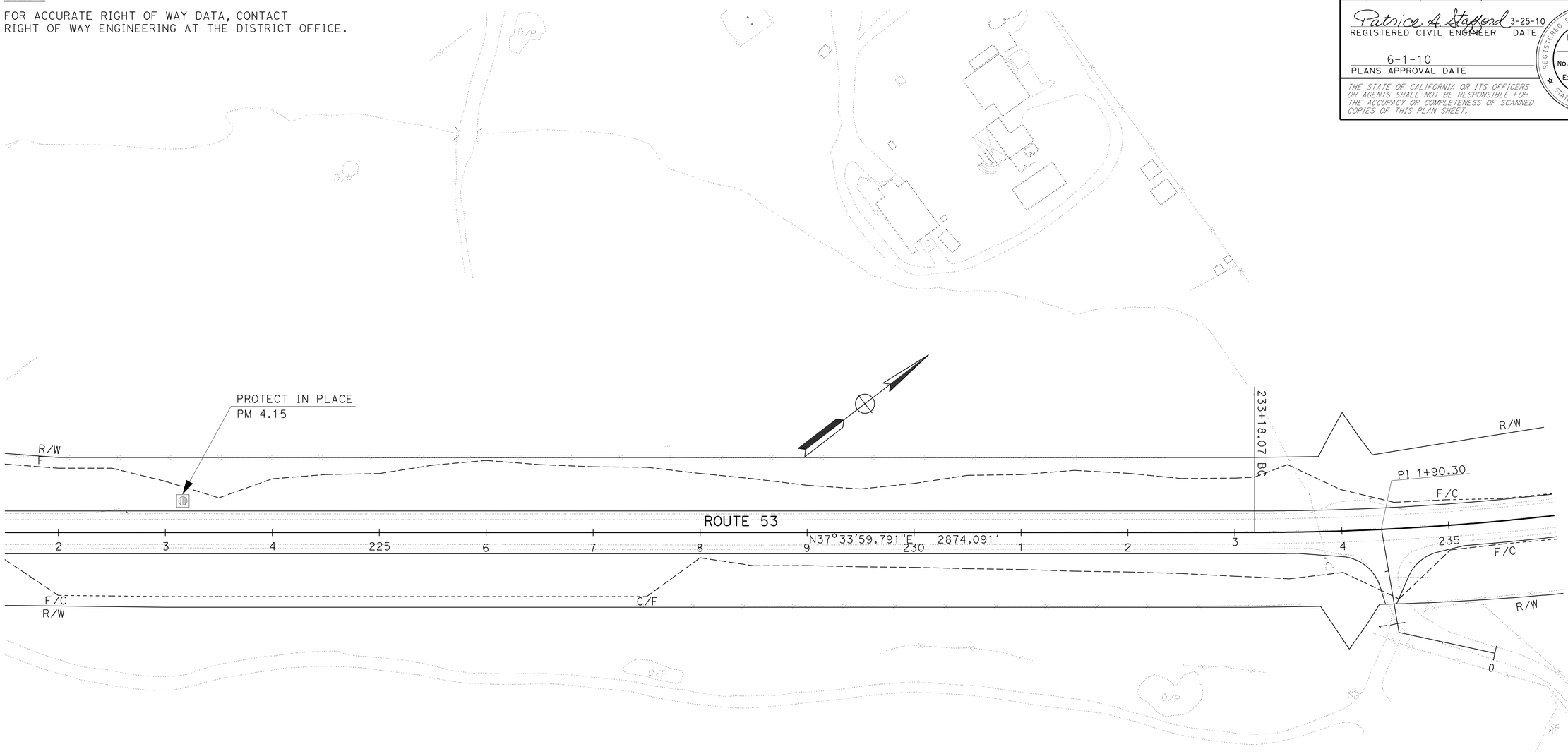


**UTILITY PLAN**

SCALE: 1" = 50'

**U-4**

THIS PLAN ACCURATE FOR UTILITY INFORMATION ONLY

REVISED BY | DATE REVISED

P. STAFFORD | C. OLSON

CALCULATED-DESIGNED BY | CHECKED BY

FUNCTIONAL SUPERVISOR

C. OLSON

STATE OF CALIFORNIA - DEPARTMENT OF TRANSPORTATION
Caltrans
NORTH REGION
OFFICE OF DESIGN, SOUTH
DESIGN BRANCH S10

06:36 14-JUN-2010 trmikesl 13986uka004.dgn

LAST REVISION 03-25-10 | DATE PLOTTED => 14-JUN-2010 | TIME PLOTTED => 06:36

| Dist | COUNTY | ROUTE | POST MILES TOTAL PROJECT | SHEET No. | TOTAL SHEETS |
|---|---|---|---|---|---|
| 01 | Lak | 53 | 2.8/7.5 | 135 | 217 |

Patrice A. Stafford 3-25-10
REGISTERED CIVIL ENGINEER DATE

6-1-10
PLANS APPROVAL DATE

REGISTERED PROFESSIONAL ENGINEER
PATRICE A. STAFFORD
No. 61256
Exp. 6-30-11
CIVIL
STATE OF CALIFORNIA

*THE STATE OF CALIFORNIA OR ITS OFFICERS OR AGENTS SHALL NOT BE RESPONSIBLE FOR THE ACCURACY OR COMPLETENESS OF SCANNED COPIES OF THIS PLAN SHEET.*

**NOTE:**

FOR ACCURATE RIGHT OF WAY DATA, CONTACT RIGHT OF WAY ENGINEERING AT THE DISTRICT OFFICE.

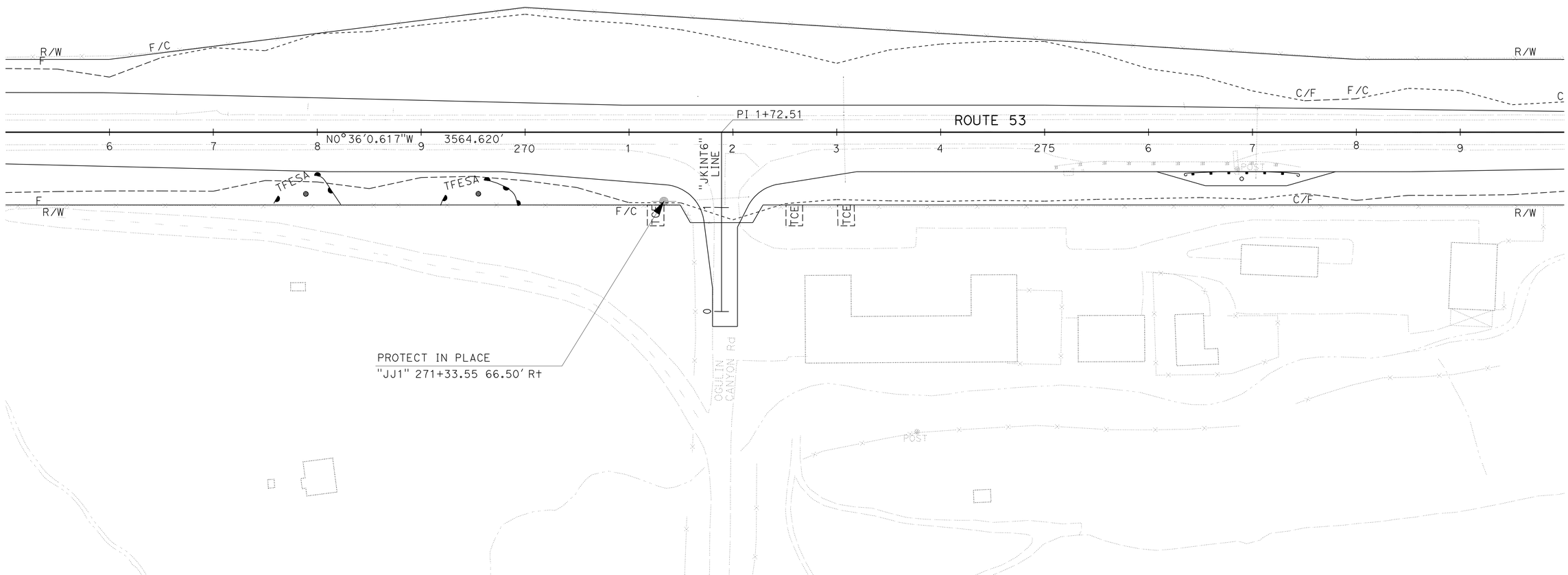


# UTILITY PLAN

SCALE: 1" = 50'

**U-5**

THIS PLAN ACCURATE FOR UTILITY INFORMATION ONLY

| REVISED BY | DATE REVISED |
|---|---|
| | |

CALCULATED-DESIGNED BY: P. STAFFORD
CHECKED BY: C. OLSON
FUNCTIONAL SUPERVISOR: C. OLSON

STATE OF CALIFORNIA - DEPARTMENT OF TRANSPORTATION
Caltrans
NORTH REGION
OFFICE OF DESIGN, SOUTH
DESIGN BRANCH S10

06:36 14-JUN-2010 trmikesl 13986uka005.dgn

LAST REVISION 03-25-10 | DATE PLOTTED => 14-JUN-2010 | TIME PLOTTED => 06:36

| Dist | COUNTY | ROUTE | POST MILES TOTAL PROJECT | SHEET No. | TOTAL SHEETS |
|---|---|---|---|---|---|
| 01 | Lak | 53 | 2.8/7.5 | 136 | 217 |

REGISTERED CIVIL ENGINEER 3-25-10 DATE

6-1-10
PLANS APPROVAL DATE

REGISTERED PROFESSIONAL ENGINEER MOHAMMAD RAYYAN No. 60591 Exp. 12-31-10 CIVIL STATE OF CALIFORNIA

*THE STATE OF CALIFORNIA OR ITS OFFICERS OR AGENTS SHALL NOT BE RESPONSIBLE FOR THE ACCURACY OR COMPLETENESS OF SCANNED COPIES OF THIS PLAN SHEET.*

# STATIONARY MOUNTED CONSTRUCTION AREA SIGNS

| SIGN LETTER | SIGN CODE FEDERAL | SIGN CODE CALIFORNIA | PANEL SIZE | SIGN MESSAGE | NUMBER OF POSTS AND SIZE | NUMBER OF SIGNS |
|---|---|---|---|---|---|---|
| A | G20-1[Spec](6) | | 60" x 30" | ROAD WORK NEXT 6 MILES | 2-4" x 6" | 3 |
| B | W20-1 | C23 | 48" x 48" | ROAD WORK AHEAD | 6" x 6" | 11 |
| C | G20-2 | C14 | 36" x 18" | END ROAD WORK | 4" x 4" | 13 |
| D | | C40(Mod) | 72" x 42" | TRAFFIC FINES DOUBLED IN WORK ZONES | 2-4" x 6" | 2 |
| E | W11-1<br>W16-1 | | 24" x 18"<br>36" x 36" | BICYCLE WARNING SHARE THE ROAD | 4" x 6" | 2 |

NOTES: SIGN LOCATIONS SHOWN ARE APPROXIMATE.
EXACT LOCATIONS TO BE DETERMINED BY THE ENGINEER.

**LEGEND**

(XX) CONSTRUCTION AREA SIGN LETTER

SIGN - SINGLE POST

SIGN - TWO POST

<CA> CALIFORNIA SIGN CODE

## SIGN DETAILS

(A) G20-1[Spec](6)

ROAD WORK
NEXT 6 MILES

6" C SERIES LETTERS

60"x30"

Retroreflective orange background with black legend and border.

(D) C40(Mod)<CA>

TRAFFIC FINES
DOUBLED IN
WORK ZONES

6" D SERIES LETTERS

72"x42"

Retroreflective white background with black legend and border.

# CONSTRUCTION AREA SIGNS

NO SCALE

**CS-1**

THIS PLAN ACCURATE FOR CONSTRUCTION AREA SIGN WORK ONLY

STATE OF CALIFORNIA - DEPARTMENT OF TRANSPORTATION
Caltrans
TRAFFIC DESIGN BRANCH SACRAMENTO

FUNCTIONAL SUPERVISOR: ERIC WONG
CALCULATED-DESIGNED BY: M. RAYYAN
CHECKED BY: P. STAFFORD
REVISED BY / DATE REVISED

06:36 14-JUN-2010 trmikesl 13986ula001.dgn

LAST REVISION 00-00-00 | DATE PLOTTED => 14-JUN-2010 | TIME PLOTTED => 06:36

BORDER LAST REVISED 4/11/2008 | RELATIVE BORDER SCALE IS IN INCHES 0 1 2 3 | USERNAME => trmikesl | DGN FILE => 13986ula001.dgn | CU 03380 | EA 3986U1

| Dist | COUNTY | ROUTE | POST MILES TOTAL PROJECT | SHEET No. | TOTAL SHEETS |
|---|---|---|---|---|---|
| 01 | Lak | 53 | 2.8/7.5 | 137 | 217 |

REGISTERED CIVIL ENGINEER 3-25-10 DATE

6-1-10
PLANS APPROVAL DATE

REGISTERED PROFESSIONAL ENGINEER MOHAMMAD RAYYAN No. 60591 Exp. 12-31-10 CIVIL STATE OF CALIFORNIA

*THE STATE OF CALIFORNIA OR ITS OFFICERS OR AGENTS SHALL NOT BE RESPONSIBLE FOR THE ACCURACY OR COMPLETENESS OF SCANNED COPIES OF THIS PLAN SHEET.*

## LEGEND

- Limit of Striping Pattern
- Change In Striping Pattern
- No. — Pavement Delineation Detail Number
- LL — Limit Line
- CH — Chevrons
- XW — CROSS WALK
- Delineator (Class 1)
- Object Marker
- s= Delineator Spacing
- Mile Post Marker
- Type II Arrow
- Type III Arrow
- Type V Arrow
- Type VI Arrow
- Si — "SIGNAL" Pavement Marking
- A — "AHEAD" Pavement Marking
- S — "STOP" Pavement Marking
- Sht-No. — Roadside Sign Number
- No. — Overhead Sign Number
- <CA> — California Sign Code
- Sign - Single Post
- Sign - Two Post
- Sign - SSBM
- Overhead Sign Structure
- Remove Roadside Sign
- * — Reset Roadside Sign

## ABBREVIATIONS

| | |
|---|---|
| UC | Uppercase |
| LC | Lowercase |

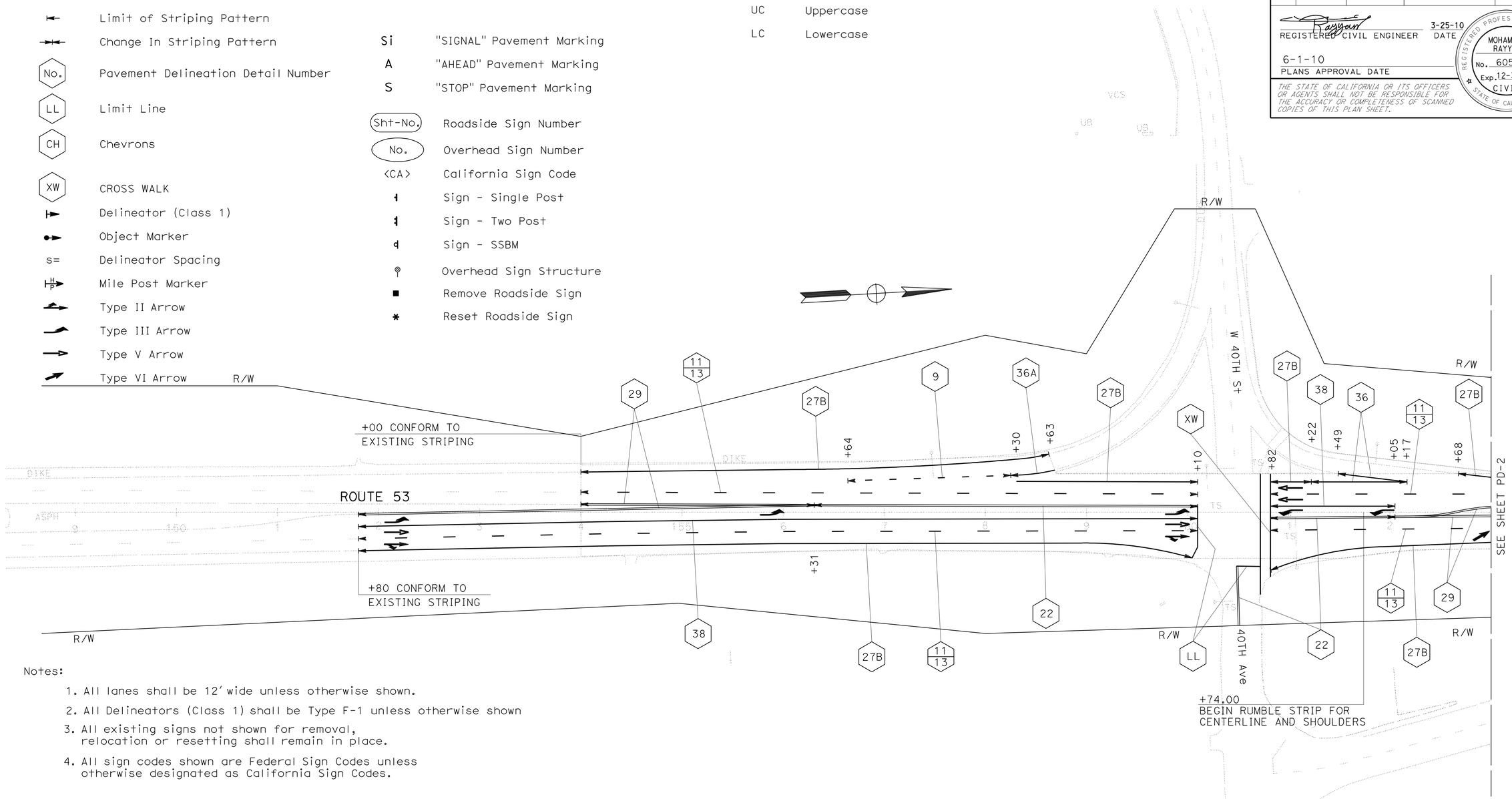


Notes:

1. All lanes shall be 12′ wide unless otherwise shown.
2. All Delineators (Class 1) shall be Type F-1 unless otherwise shown
3. All existing signs not shown for removal, relocation or resetting shall remain in place.
4. All sign codes shown are Federal Sign Codes unless otherwise designated as California Sign Codes.

THIS PLAN ACCURATE FOR PAVEMENT DELINEATION AND SIGN WORK ONLY.

# PAVEMENT DELINEATION AND SIGN PLAN

SCALE: 1" = 50′

**PD-1**

REVISED BY | DATE REVISED
M. RAYYAN | P. STAFFORD
CALCULATED-DESIGNED BY | CHECKED BY
FUNCTIONAL SUPERVISOR: ERIC Y. WONG

STATE OF CALIFORNIA - DEPARTMENT OF TRANSPORTATION
Caltrans
TRAFFIC DESIGN BRANCH SACRAMENTO

06:36 14-JUN-2010 trmikesl 13986una001.dgn

LAST REVISION 00-00-00 | DATE PLOTTED => 14-JUN-2010 | TIME PLOTTED => 06:36

| Dist | COUNTY | ROUTE | POST MILES TOTAL PROJECT | SHEET No. | TOTAL SHEETS |
|---|---|---|---|---|---|
| 01 | Lak | 53 | 2.8/7.5 | 138 | 217 |

REGISTERED CIVIL ENGINEER — DATE 3-25-10

6-1-10
PLANS APPROVAL DATE

REGISTERED PROFESSIONAL ENGINEER — MOHAMMAD RAYYAN — No. 60591 — Exp. 12-31-10 — CIVIL — STATE OF CALIFORNIA

*THE STATE OF CALIFORNIA OR ITS OFFICERS OR AGENTS SHALL NOT BE RESPONSIBLE FOR THE ACCURACY OR COMPLETENESS OF SCANNED COPIES OF THIS PLAN SHEET.*

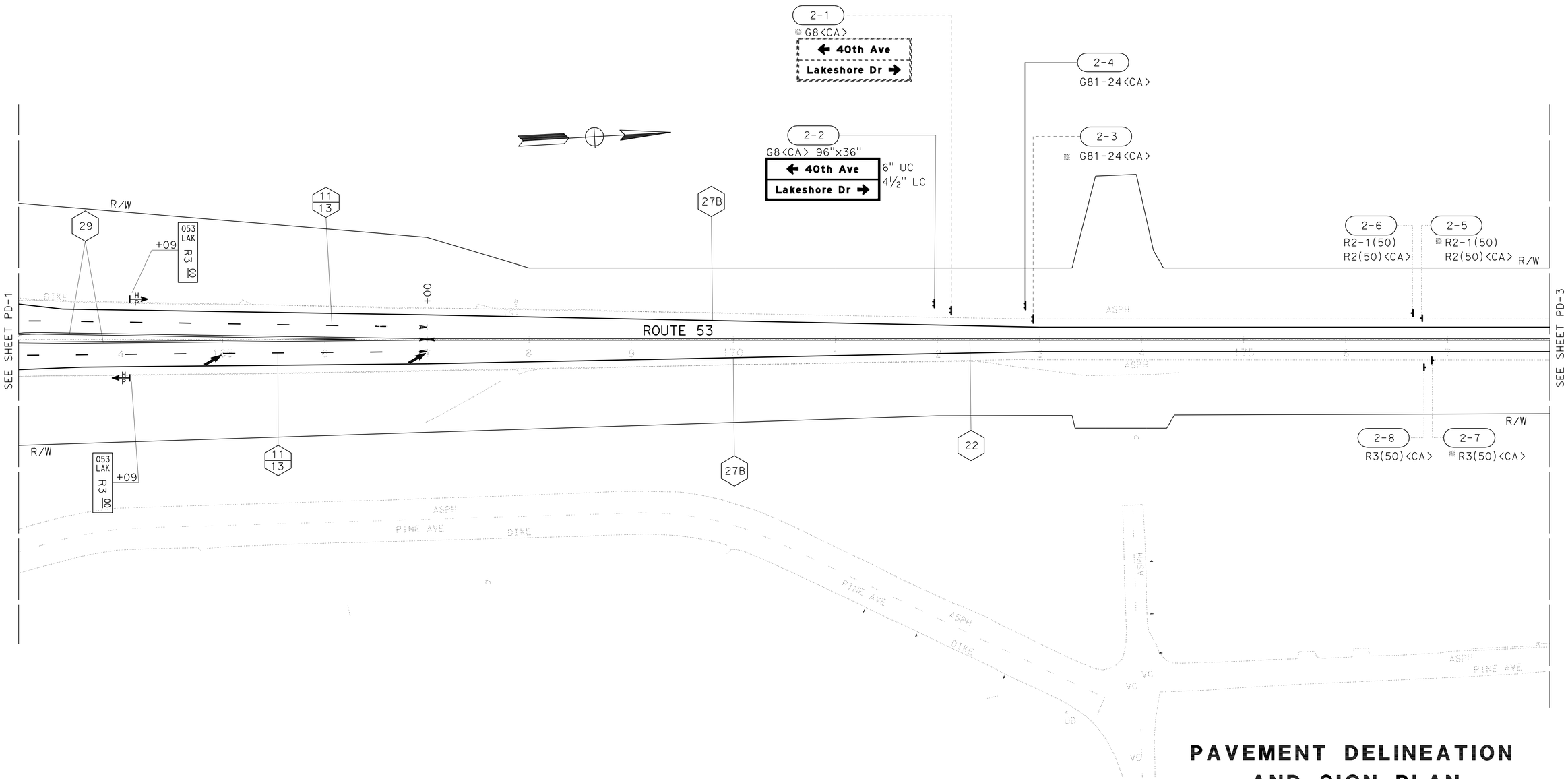


# PAVEMENT DELINEATION AND SIGN PLAN

SCALE: 1" = 50'

**PD-2**

THIS PLAN ACCURATE FOR PAVEMENT DELINEATION AND SIGN WORK ONLY.

| REVISED BY | DATE REVISED |
|---|---|
| | |

CALCULATED-DESIGNED BY: M. RAYYAN
CHECKED BY: P. STAFFORD
FUNCTIONAL SUPERVISOR: ERIC Y. WONG

STATE OF CALIFORNIA - DEPARTMENT OF TRANSPORTATION
Caltrans
TRAFFIC DESIGN BRANCH SACRAMENTO

06:36 14-JUN-2010 trmikesl 13986una002.dgn

LAST REVISION 00-00-00 | DATE PLOTTED => 14-JUN-2010 | TIME PLOTTED => 06:36

| Dist | COUNTY | ROUTE | POST MILES TOTAL PROJECT | SHEET No. | TOTAL SHEETS |
|---|---|---|---|---|---|
| 01 | Lak | 53 | 2.8/7.5 | 139 | 217 |

REGISTERED CIVIL ENGINEER 3-25-10 DATE

6-1-10
PLANS APPROVAL DATE

REGISTERED PROFESSIONAL ENGINEER
MOHAMMAD RAYYAN
No. 60591
Exp. 12-31-10
CIVIL
STATE OF CALIFORNIA

*THE STATE OF CALIFORNIA OR ITS OFFICERS OR AGENTS SHALL NOT BE RESPONSIBLE FOR THE ACCURACY OR COMPLETENESS OF SCANNED COPIES OF THIS PLAN SHEET.*

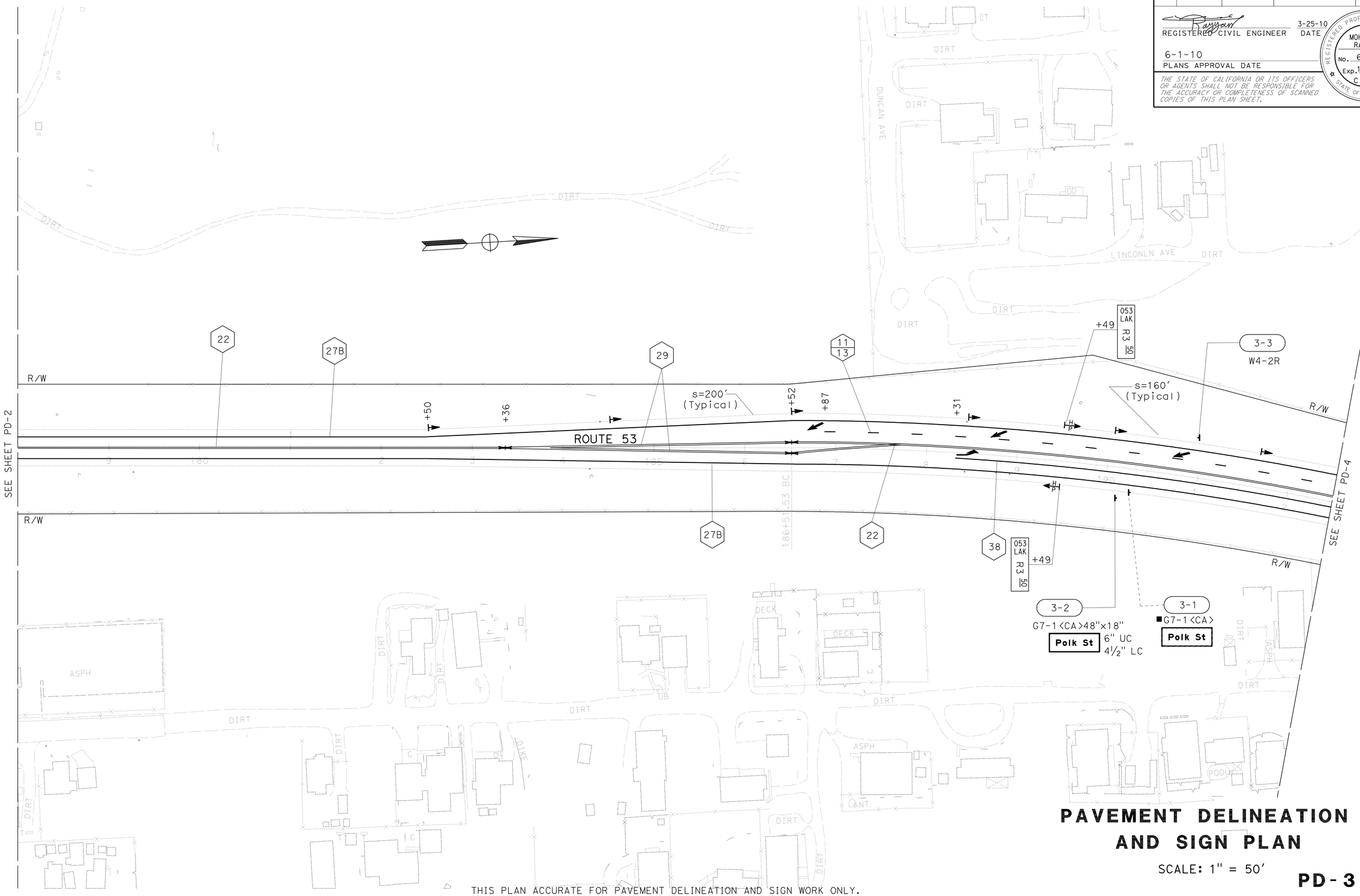


# PAVEMENT DELINEATION AND SIGN PLAN

SCALE: 1" = 50′

**PD-3**

THIS PLAN ACCURATE FOR PAVEMENT DELINEATION AND SIGN WORK ONLY.

| REVISED BY | DATE REVISED |
|---|---|
| | |

CALCULATED-DESIGNED BY: M. RAYYAN
CHECKED BY: P. STAFFORD
FUNCTIONAL SUPERVISOR: ERIC Y. WONG

STATE OF CALIFORNIA - DEPARTMENT OF TRANSPORTATION
Caltrans
TRAFFIC DESIGN BRANCH SACRAMENTO

06:36 14-JUN-2010 trmikesl 13986una003.dgn

LAST REVISION 00-00-00
DATE PLOTTED => 14-JUN-2010
TIME PLOTTED => 06:36

| Dist | COUNTY | ROUTE | POST MILES TOTAL PROJECT | SHEET No. | TOTAL SHEETS |
|---|---|---|---|---|---|
| 01 | Lak | 53 | 2.8/7.5 | 140 | 217 |

REGISTERED CIVIL ENGINEER 3-25-10 DATE

6-1-10
PLANS APPROVAL DATE

REGISTERED PROFESSIONAL ENGINEER
MOHAMMAD RAYYAN
No. 60591
Exp. 12-31-10
CIVIL
STATE OF CALIFORNIA

*THE STATE OF CALIFORNIA OR ITS OFFICERS OR AGENTS SHALL NOT BE RESPONSIBLE FOR THE ACCURACY OR COMPLETENESS OF SCANNED COPIES OF THIS PLAN SHEET.*

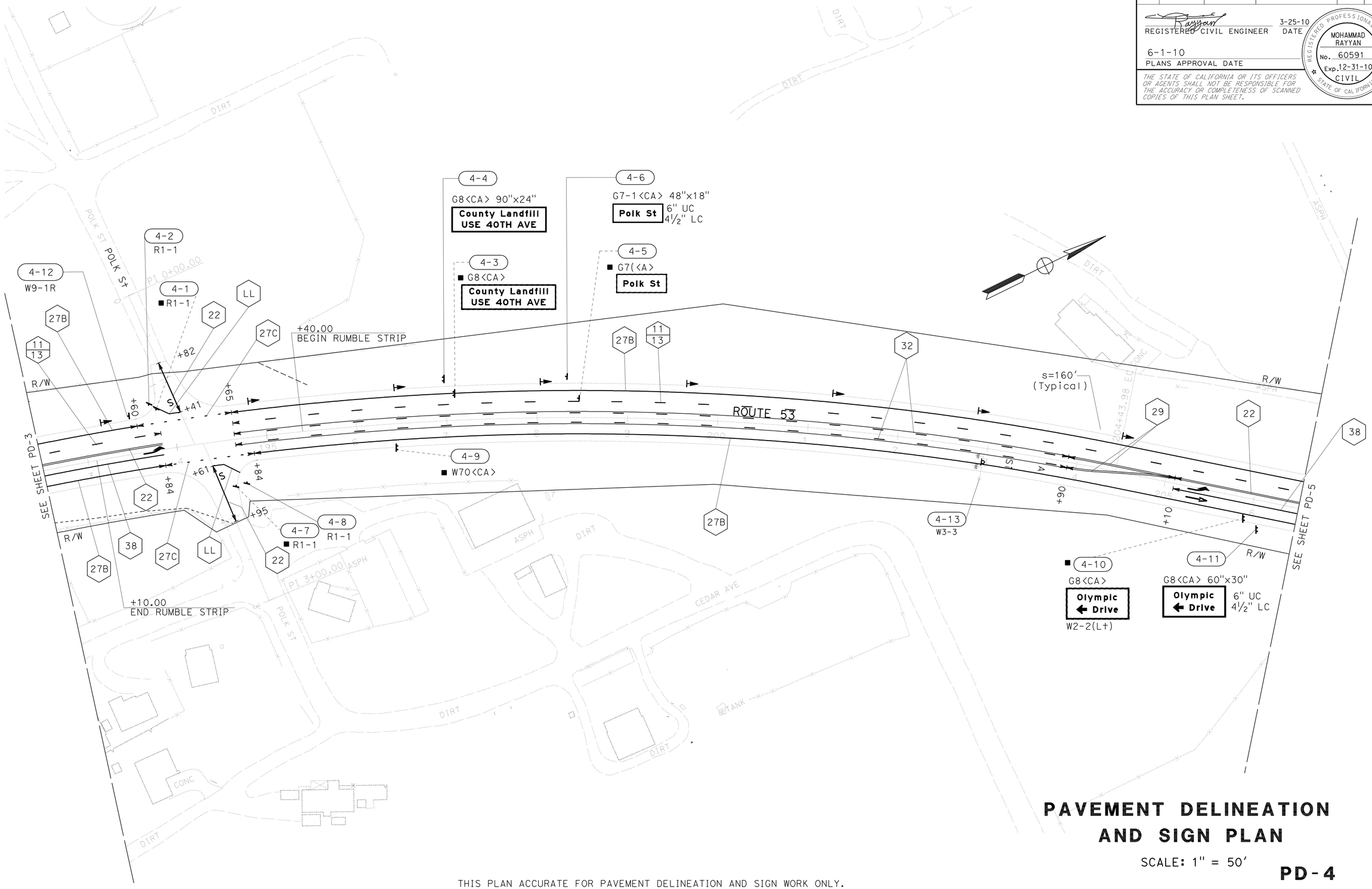


# PAVEMENT DELINEATION AND SIGN PLAN

SCALE: 1" = 50'

**PD-4**

THIS PLAN ACCURATE FOR PAVEMENT DELINEATION AND SIGN WORK ONLY.

| REVISED BY | DATE REVISED |
|---|---|
| M. RAYYAN | P. STAFFORD |

CALCULATED-DESIGNED BY: M. RAYYAN
CHECKED BY: P. STAFFORD
FUNCTIONAL SUPERVISOR: ERIC Y. WONG

STATE OF CALIFORNIA - DEPARTMENT OF TRANSPORTATION
Caltrans
TRAFFIC DESIGN BRANCH SACRAMENTO

06:36 14-JUN-2010 trmikesl 13986una004.dgn

LAST REVISION 00-00-00 | DATE PLOTTED => 14-JUN-2010 | TIME PLOTTED => 06:36

| Dist | COUNTY | ROUTE | POST MILES TOTAL PROJECT | SHEET No. | TOTAL SHEETS |
|---|---|---|---|---|---|
| 01 | Lak | 53 | 2.8/7.5 | 141 | 217 |

REGISTERED CIVIL ENGINEER 3-25-10 DATE

6-1-10
PLANS APPROVAL DATE

REGISTERED PROFESSIONAL ENGINEER MOHAMMAD RAYYAN No. 60591 Exp. 12-31-10 CIVIL STATE OF CALIFORNIA

*THE STATE OF CALIFORNIA OR ITS OFFICERS OR AGENTS SHALL NOT BE RESPONSIBLE FOR THE ACCURACY OR COMPLETENESS OF SCANNED COPIES OF THIS PLAN SHEET.*

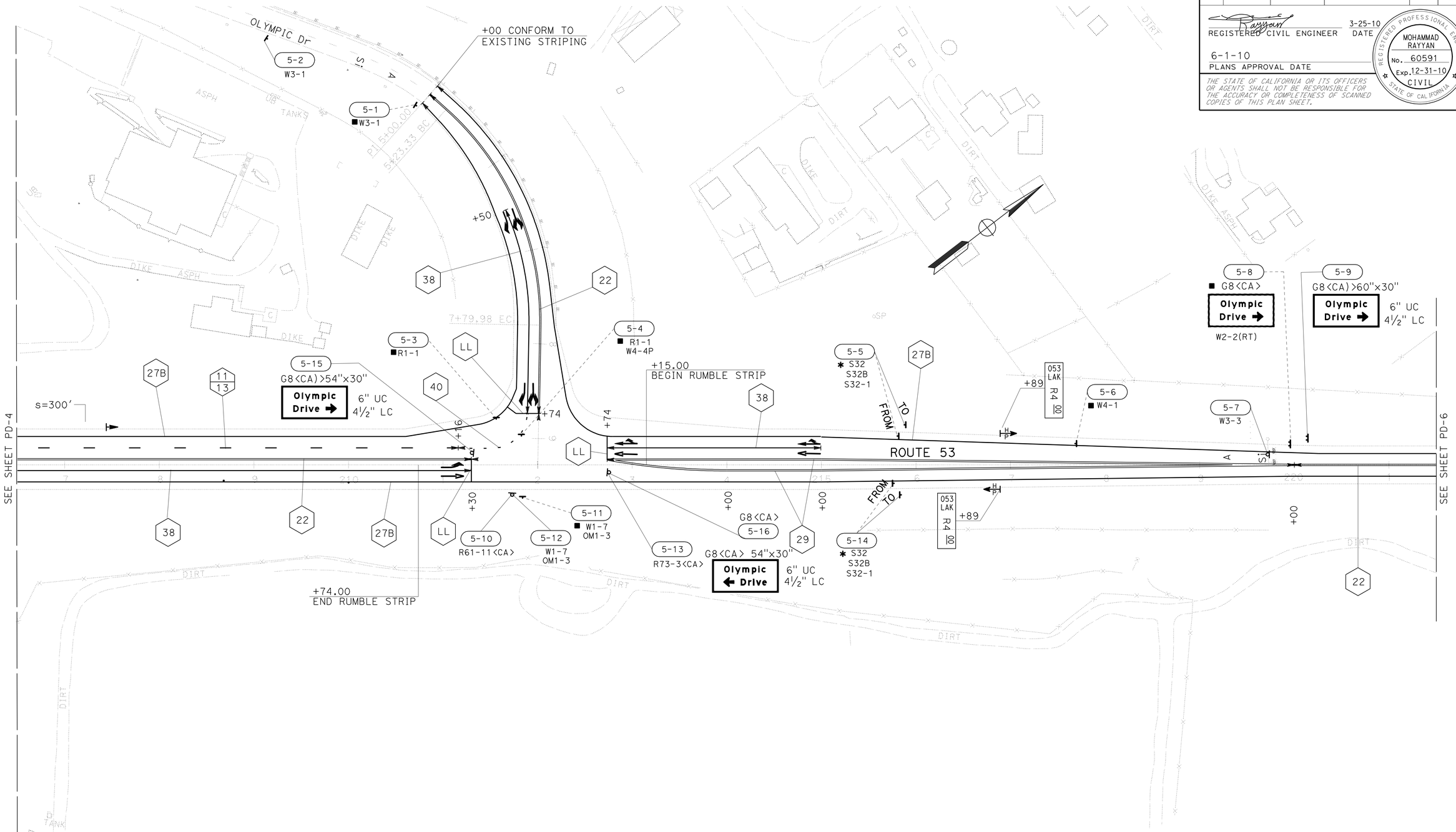


# PAVEMENT DELINEATION AND SIGN PLAN

SCALE: 1" = 50'

**PD-5**

THIS PLAN ACCURATE FOR PAVEMENT DELINEATION AND SIGN WORK ONLY.

| REVISED BY | DATE REVISED |
|---|---|
| | |

CALCULATED-DESIGNED BY: M. RAYYAN
CHECKED BY: P. STAFFORD
FUNCTIONAL SUPERVISOR: ERIC Y. WONG

STATE OF CALIFORNIA - DEPARTMENT OF TRANSPORTATION
Caltrans
TRAFFIC DESIGN BRANCH SACRAMENTO

06:36 14-JUN-2010 trmikesl 13986una005.dgn

LAST REVISION 00-00-00 | DATE PLOTTED => 14-JUN-2010 | TIME PLOTTED => 06:36

| Dist | COUNTY | ROUTE | POST MILES TOTAL PROJECT | SHEET No. | TOTAL SHEETS |
|---|---|---|---|---|---|
| 01 | Lak | 53 | 2.8/7.5 | 142 | 217 |

REGISTERED CIVIL ENGINEER 3-25-10 DATE

6-1-10
PLANS APPROVAL DATE

REGISTERED PROFESSIONAL ENGINEER
MOHAMMAD RAYYAN
No. 60591
Exp. 12-31-10
CIVIL
STATE OF CALIFORNIA

*THE STATE OF CALIFORNIA OR ITS OFFICERS OR AGENTS SHALL NOT BE RESPONSIBLE FOR THE ACCURACY OR COMPLETENESS OF SCANNED COPIES OF THIS PLAN SHEET.*

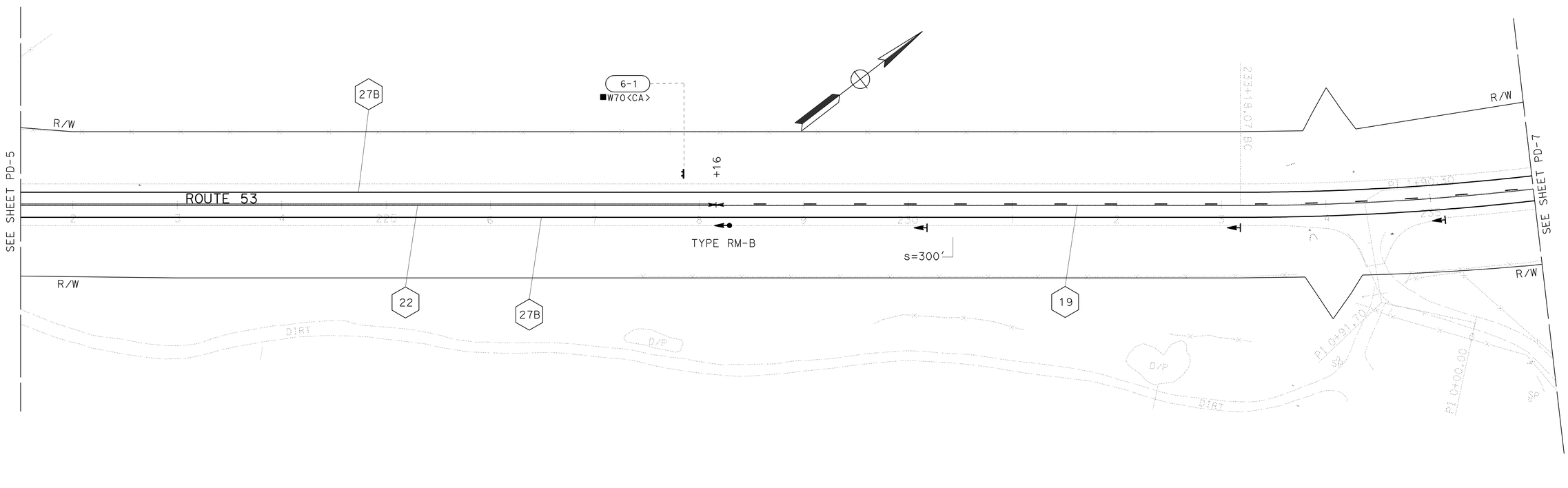


# PAVEMENT DELINEATION AND SIGN PLAN

SCALE: 1" = 50'

**PD-6**

THIS PLAN ACCURATE FOR PAVEMENT DELINEATION AND SIGN WORK ONLY.

| | |
|---|---|
| CALCULATED-DESIGNED BY | M. RAYYAN |
| CHECKED BY | P. STAFFORD |
| FUNCTIONAL SUPERVISOR | ERIC Y. WONG |
| REVISED BY | |
| DATE REVISED | |

STATE OF CALIFORNIA - DEPARTMENT OF TRANSPORTATION
Caltrans
TRAFFIC DESIGN BRANCH SACRAMENTO

06:36 14-JUN-2010 trmikesl 13986una006.dgn

LAST REVISION 00-00-00
DATE PLOTTED => 14-JUN-2010
TIME PLOTTED => 06:36

| Dist | COUNTY | ROUTE | POST MILES TOTAL PROJECT | SHEET No. | TOTAL SHEETS |
|---|---|---|---|---|---|
| 01 | Lak | 53 | 2.8/7.5 | 143 | 217 |

REGISTERED CIVIL ENGINEER 3-25-10 DATE

6-1-10
PLANS APPROVAL DATE

REGISTERED PROFESSIONAL ENGINEER
MOHAMMAD RAYYAN
No. 60591
Exp. 12-31-10
CIVIL
STATE OF CALIFORNIA

*THE STATE OF CALIFORNIA OR ITS OFFICERS OR AGENTS SHALL NOT BE RESPONSIBLE FOR THE ACCURACY OR COMPLETENESS OF SCANNED COPIES OF THIS PLAN SHEET.*

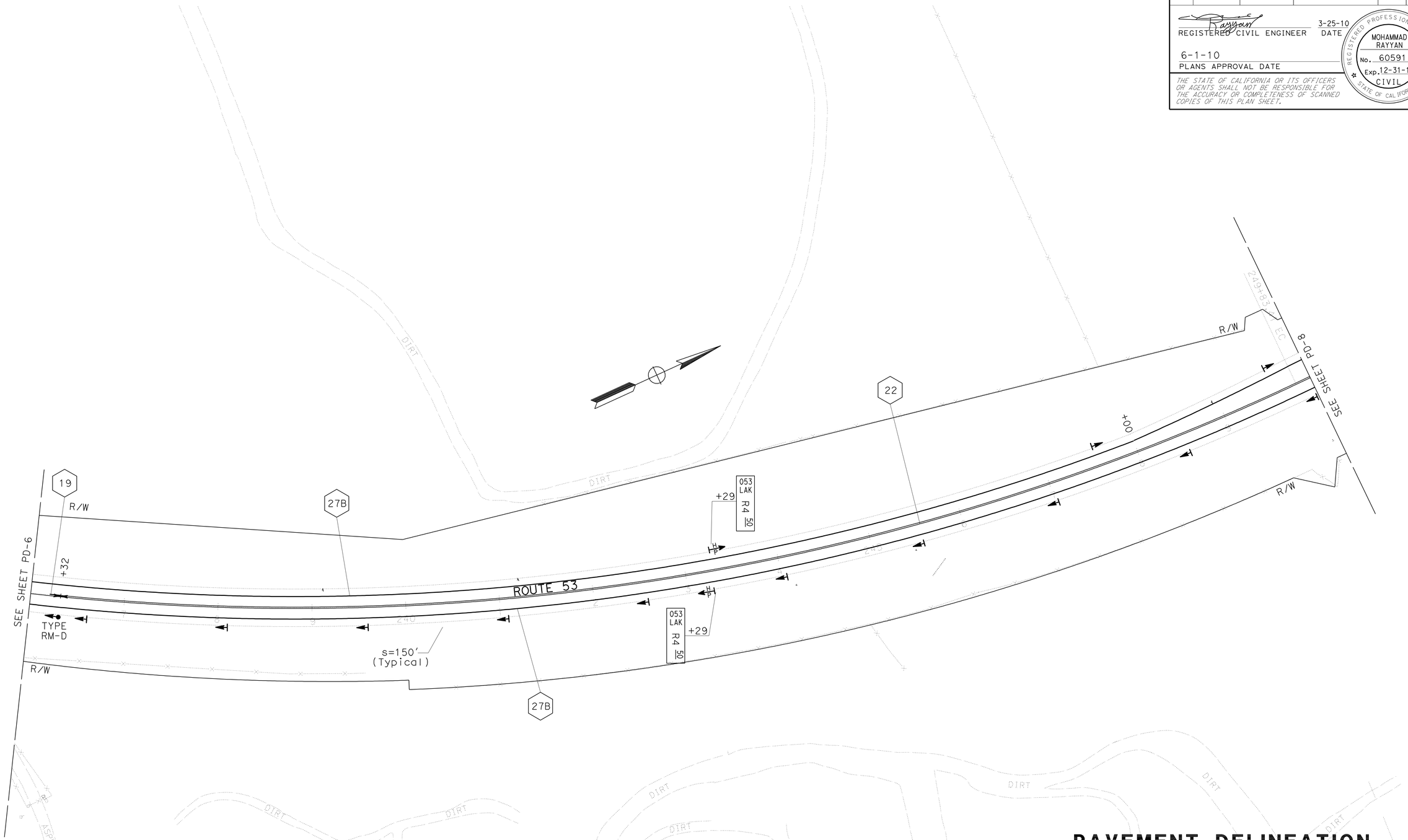


THIS PLAN ACCURATE FOR PAVEMENT DELINEATION AND SIGN WORK ONLY.

# PAVEMENT DELINEATION AND SIGN PLAN

SCALE: 1" = 50'

**PD-7**

| | |
|---|---|
| M. RAYYAN | REVISED BY |
| P. STAFFORD | DATE REVISED |
| CALCULATED-DESIGNED BY | |
| CHECKED BY | |
| FUNCTIONAL SUPERVISOR | |
| ERIC Y. WONG | |

STATE OF CALIFORNIA - DEPARTMENT OF TRANSPORTATION
Caltrans
TRAFFIC DESIGN BRANCH SACRAMENTO

06:36 14-JUN-2010 trmikesl 13986una007.dgn

LAST REVISION 00-00-00 | DATE PLOTTED => 14-JUN-2010 | TIME PLOTTED => 06:36

BORDER LAST REVISED 4/11/2008 | RELATIVE BORDER SCALE IS IN INCHES 0 1 2 3 | USERNAME => trmikesl | DGN FILE => 13986una007.dgn | CU 03380 | EA 3986U1

| Dist | COUNTY | ROUTE | POST MILES TOTAL PROJECT | SHEET No. | TOTAL SHEETS |
|---|---|---|---|---|---|
| 01 | Lak | 53 | 2.8/7.5 | 144 | 217 |

REGISTERED CIVIL ENGINEER 3-25-10 DATE

6-1-10
PLANS APPROVAL DATE

REGISTERED PROFESSIONAL ENGINEER MOHAMMAD RAYYAN No. 60591 Exp. 12-31-10 CIVIL STATE OF CALIFORNIA

*THE STATE OF CALIFORNIA OR ITS OFFICERS OR AGENTS SHALL NOT BE RESPONSIBLE FOR THE ACCURACY OR COMPLETENESS OF SCANNED COPIES OF THIS PLAN SHEET.*

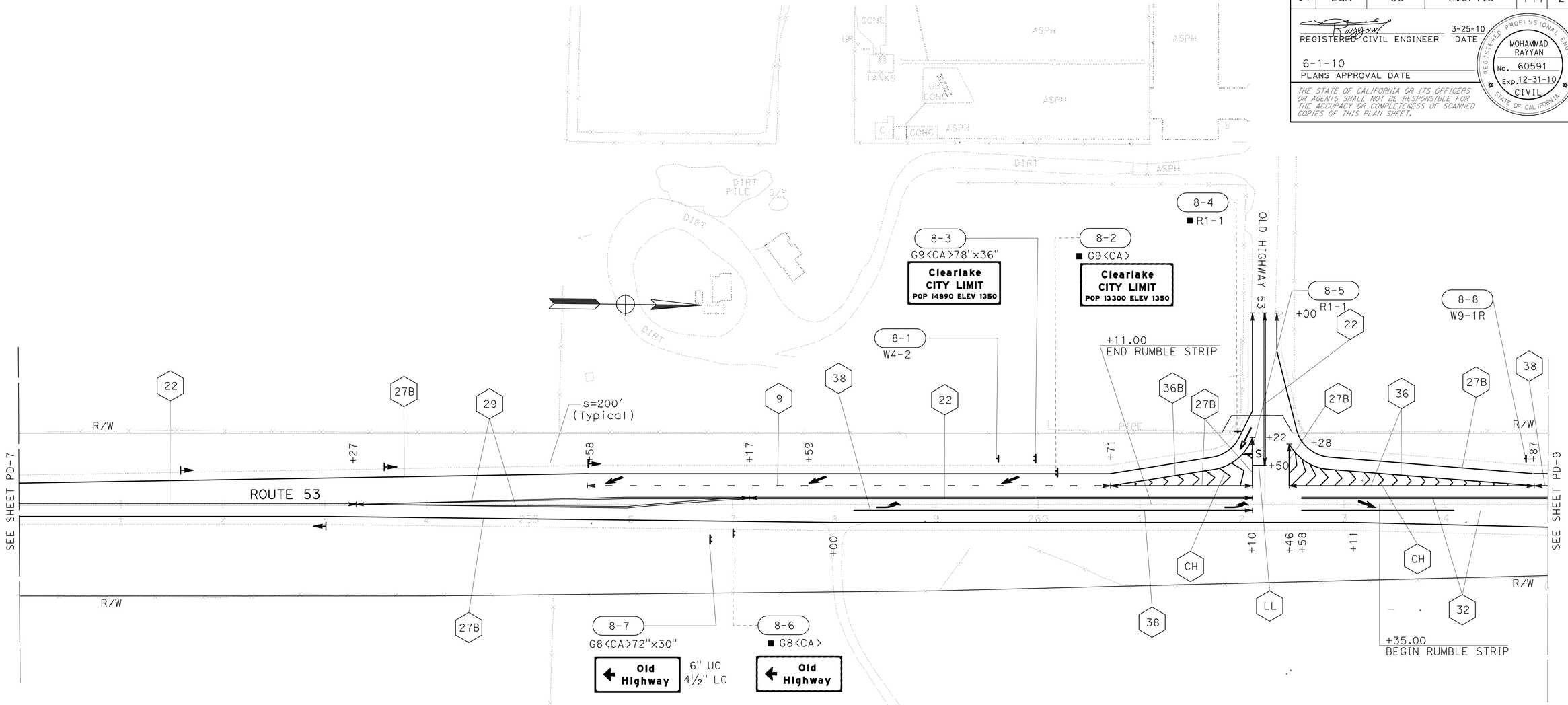


# PAVEMENT DELINEATION AND SIGN PLAN

SCALE: 1" = 50'

**PD-8**

THIS PLAN ACCURATE FOR PAVEMENT DELINEATION AND SIGN WORK ONLY.

REVISED BY | DATE REVISED
M. RAYYAN | P. STAFFORD
CALCULATED-DESIGNED BY | CHECKED BY
FUNCTIONAL SUPERVISOR
ERIC Y. WONG

STATE OF CALIFORNIA - DEPARTMENT OF TRANSPORTATION
Caltrans
TRAFFIC DESIGN BRANCH SACRAMENTO

06:37 14-JUN-2010 trmikesl 13986una008.dgn

LAST REVISION 00-00-00 | DATE PLOTTED => 14-JUN-2010 TIME PLOTTED => 06:37

BORDER LAST REVISED 4/11/2008

RELATIVE BORDER SCALE IS IN INCHES 0 1 2 3

USERNAME => trmikesl
DGN FILE => 13986una008.dgn

CU 03380 | EA 3986U1

| Dist | COUNTY | ROUTE | POST MILES TOTAL PROJECT | SHEET No. | TOTAL SHEETS |
|---|---|---|---|---|---|
| 01 | Lak | 53 | 2.8/7.5 | 145 | 217 |

REGISTERED CIVIL ENGINEER 3-25-10 DATE

6-1-10
PLANS APPROVAL DATE

REGISTERED PROFESSIONAL ENGINEER
MOHAMMAD RAYYAN
No. 60591
Exp. 12-31-10
CIVIL
STATE OF CALIFORNIA

*THE STATE OF CALIFORNIA OR ITS OFFICERS OR AGENTS SHALL NOT BE RESPONSIBLE FOR THE ACCURACY OR COMPLETENESS OF SCANNED COPIES OF THIS PLAN SHEET.*

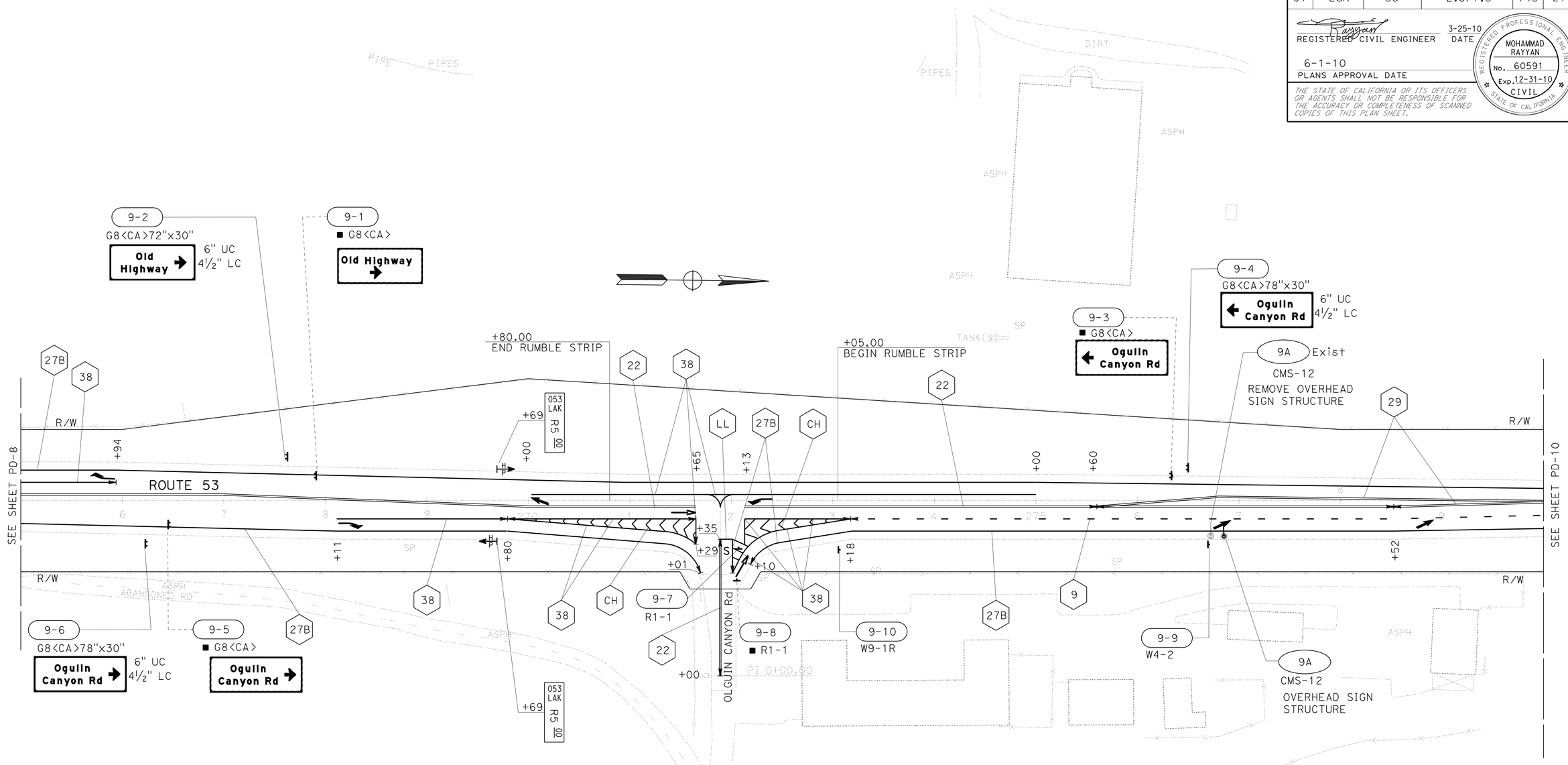


# PAVEMENT DELINEATION AND SIGN PLAN

SCALE: 1" = 50'

THIS PLAN ACCURATE FOR PAVEMENT DELINEATION AND SIGN WORK ONLY.

**PD-9**

| REVISED BY | DATE REVISED |
|---|---|
| | |

| CALCULATED-DESIGNED BY | CHECKED BY |
|---|---|
| M. RAYYAN | P. STAFFORD |

FUNCTIONAL SUPERVISOR: ERIC Y. WONG

STATE OF CALIFORNIA - DEPARTMENT OF TRANSPORTATION
Caltrans
TRAFFIC DESIGN BRANCH SACRAMENTO

06:37 14-JUN-2010 trmikesl 13986una009.dgn

LAST REVISION 00-00-00 | DATE PLOTTED => 14-JUN-2010 | TIME PLOTTED => 06:37

BORDER LAST REVISED 4/11/2008 | RELATIVE BORDER SCALE IS IN INCHES 0 1 2 3 | USERNAME => trmikesl | DGN FILE => 13986una009.dgn | CU 03380 | EA 3986U1

| Dist | COUNTY | ROUTE | POST MILES TOTAL PROJECT | SHEET No. | TOTAL SHEETS |
|---|---|---|---|---|---|
| 01 | Lak | 53 | 2.8/7.5 | 146 | 217 |

REGISTERED CIVIL ENGINEER 3-25-10 DATE

6-1-10
PLANS APPROVAL DATE

REGISTERED PROFESSIONAL ENGINEER
MOHAMMAD RAYYAN
No. 60591
Exp. 12-31-10
CIVIL
STATE OF CALIFORNIA

*THE STATE OF CALIFORNIA OR ITS OFFICERS OR AGENTS SHALL NOT BE RESPONSIBLE FOR THE ACCURACY OR COMPLETENESS OF SCANNED COPIES OF THIS PLAN SHEET.*

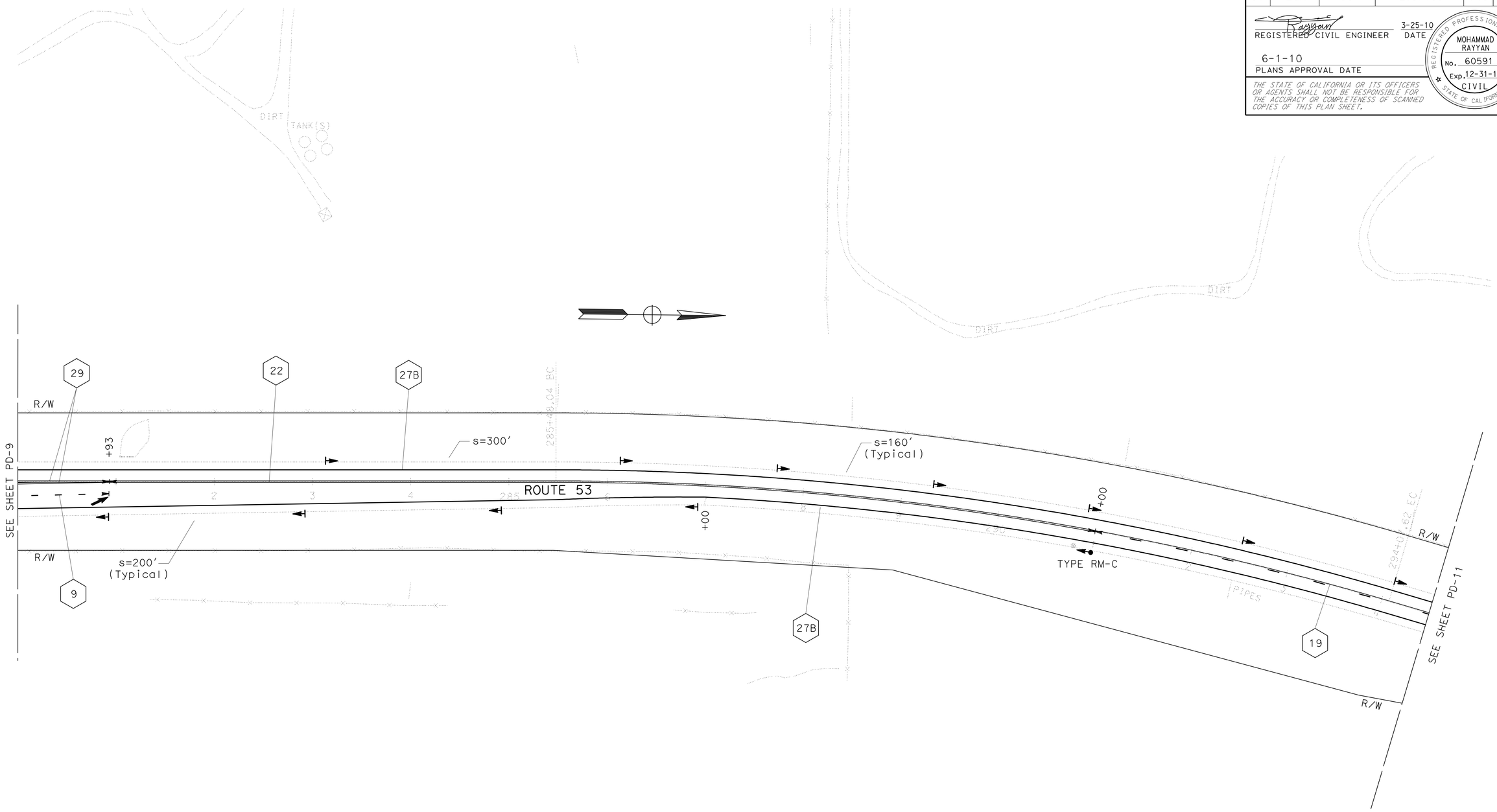


# PAVEMENT DELINEATION AND SIGN PLAN

SCALE: 1" = 50′

**PD-10**

THIS PLAN ACCURATE FOR PAVEMENT DELINEATION AND SIGN WORK ONLY.

| CALCULATED-DESIGNED BY | M. RAYYAN | FUNCTIONAL SUPERVISOR | ERIC Y. WONG |
|---|---|---|---|
| CHECKED BY | P. STAFFORD | REVISED BY / DATE REVISED | |

STATE OF CALIFORNIA - DEPARTMENT OF TRANSPORTATION
Caltrans
TRAFFIC DESIGN BRANCH SACRAMENTO

06:37 14-JUN-2010 trmikes1 13986una010.dgn

LAST REVISION 00-00-00 | DATE PLOTTED => 14-JUN-2010 | TIME PLOTTED => 06:37

BORDER LAST REVISED 4/11/2008 | RELATIVE BORDER SCALE IS IN INCHES 0 1 2 3 | USERNAME => trmikes1 | DGN FILE => 13986una010.dgn | CU 03380 | EA 3986U1

| Dist | COUNTY | ROUTE | POST MILES TOTAL PROJECT | SHEET No. | TOTAL SHEETS |
|---|---|---|---|---|---|
| 01 | Lak | 53 | 2.8/7.5 | 147 | 217 |

REGISTERED CIVIL ENGINEER 3-25-10 DATE

6-1-10
PLANS APPROVAL DATE

REGISTERED PROFESSIONAL ENGINEER
MOHAMMAD RAYYAN
No. 60591
Exp. 12-31-10
CIVIL
STATE OF CALIFORNIA

*THE STATE OF CALIFORNIA OR ITS OFFICERS OR AGENTS SHALL NOT BE RESPONSIBLE FOR THE ACCURACY OR COMPLETENESS OF SCANNED COPIES OF THIS PLAN SHEET.*

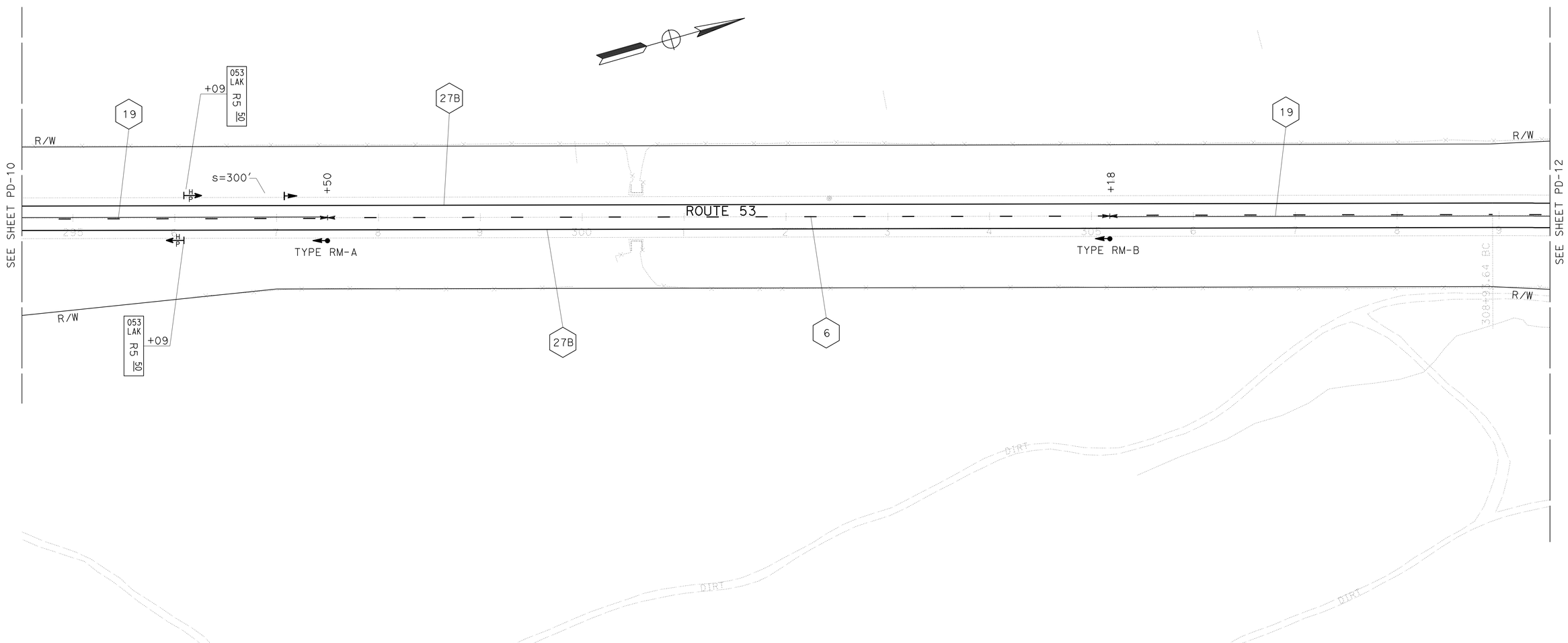


THIS PLAN ACCURATE FOR PAVEMENT DELINEATION AND SIGN WORK ONLY.

# PAVEMENT DELINEATION AND SIGN PLAN

SCALE: 1" = 50'

**PD-11**

| REVISED BY | DATE REVISED |
|---|---|
| | |

CALCULATED-DESIGNED BY: M. RAYYAN
CHECKED BY: P. STAFFORD
FUNCTIONAL SUPERVISOR: ERIC Y. WONG

STATE OF CALIFORNIA - DEPARTMENT OF TRANSPORTATION
Caltrans
TRAFFIC DESIGN BRANCH SACRAMENTO

06:37 14-JUN-2010 trmikesl 13986una011.dgn

LAST REVISION 00-00-00 | DATE PLOTTED => 14-JUN-2010 | TIME PLOTTED => 06:37

BORDER LAST REVISED 4/11/2008 | RELATIVE BORDER SCALE IS IN INCHES 0 1 2 3 | USERNAME => trmikesl | DGN FILE => 13986una011.dgn | CU 03380 | EA 3986U1

| Dist | COUNTY | ROUTE | POST MILES TOTAL PROJECT | SHEET No. | TOTAL SHEETS |
|---|---|---|---|---|---|
| 01 | Lak | 53 | 2.8/7.5 | 148 | 217 |

REGISTERED CIVIL ENGINEER 3-25-10 DATE

6-1-10
PLANS APPROVAL DATE

REGISTERED PROFESSIONAL ENGINEER
MOHAMMAD RAYYAN
No. 60591
Exp. 12-31-10
CIVIL
STATE OF CALIFORNIA

*THE STATE OF CALIFORNIA OR ITS OFFICERS OR AGENTS SHALL NOT BE RESPONSIBLE FOR THE ACCURACY OR COMPLETENESS OF SCANNED COPIES OF THIS PLAN SHEET.*

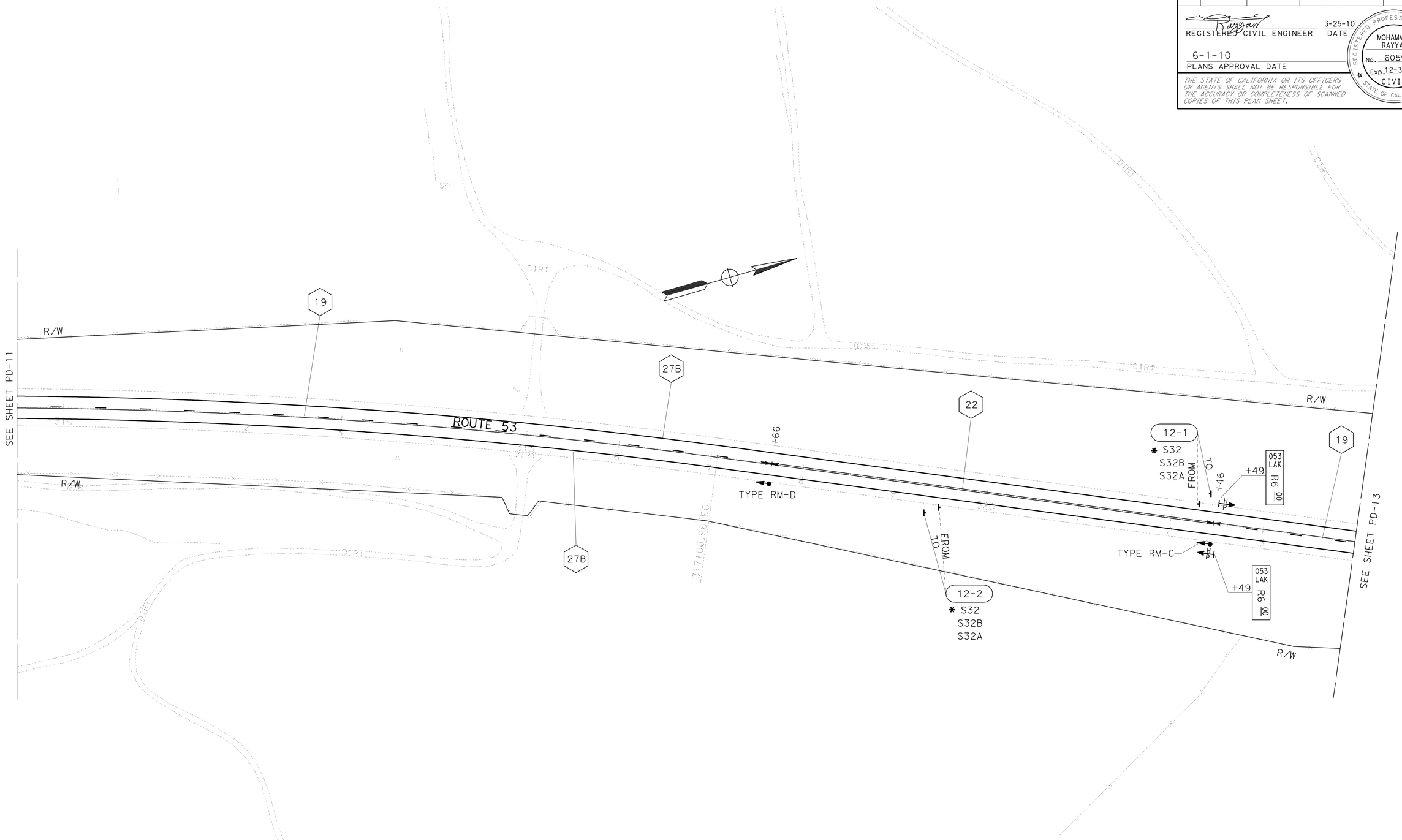


# PAVEMENT DELINEATION AND SIGN PLAN

SCALE: 1" = 50'

**PD-12**

THIS PLAN ACCURATE FOR PAVEMENT DELINEATION AND SIGN WORK ONLY.

| REVISED BY | DATE REVISED |
|---|---|
| | |

CALCULATED-DESIGNED BY: M. RAYYAN
CHECKED BY: P. STAFFORD
FUNCTIONAL SUPERVISOR: ERIC Y. WONG

STATE OF CALIFORNIA - DEPARTMENT OF TRANSPORTATION
Caltrans
TRAFFIC DESIGN BRANCH SACRAMENTO

06:37 14-JUN-2010 trmikesl 13986una012.dgn

LAST REVISION 00-00-00 | DATE PLOTTED => 14-JUN-2010 | TIME PLOTTED => 06:37

| Dist | COUNTY | ROUTE | POST MILES TOTAL PROJECT | SHEET No. | TOTAL SHEETS |
|---|---|---|---|---|---|
| 01 | Lak | 53 | 2.8/7.5 | 149 | 217 |

REGISTERED CIVIL ENGINEER 3-25-10 DATE

6-1-10
PLANS APPROVAL DATE

REGISTERED PROFESSIONAL ENGINEER
MOHAMMAD RAYYAN
No. 60591
Exp. 12-31-10
CIVIL
STATE OF CALIFORNIA

*THE STATE OF CALIFORNIA OR ITS OFFICERS OR AGENTS SHALL NOT BE RESPONSIBLE FOR THE ACCURACY OR COMPLETENESS OF SCANNED COPIES OF THIS PLAN SHEET.*

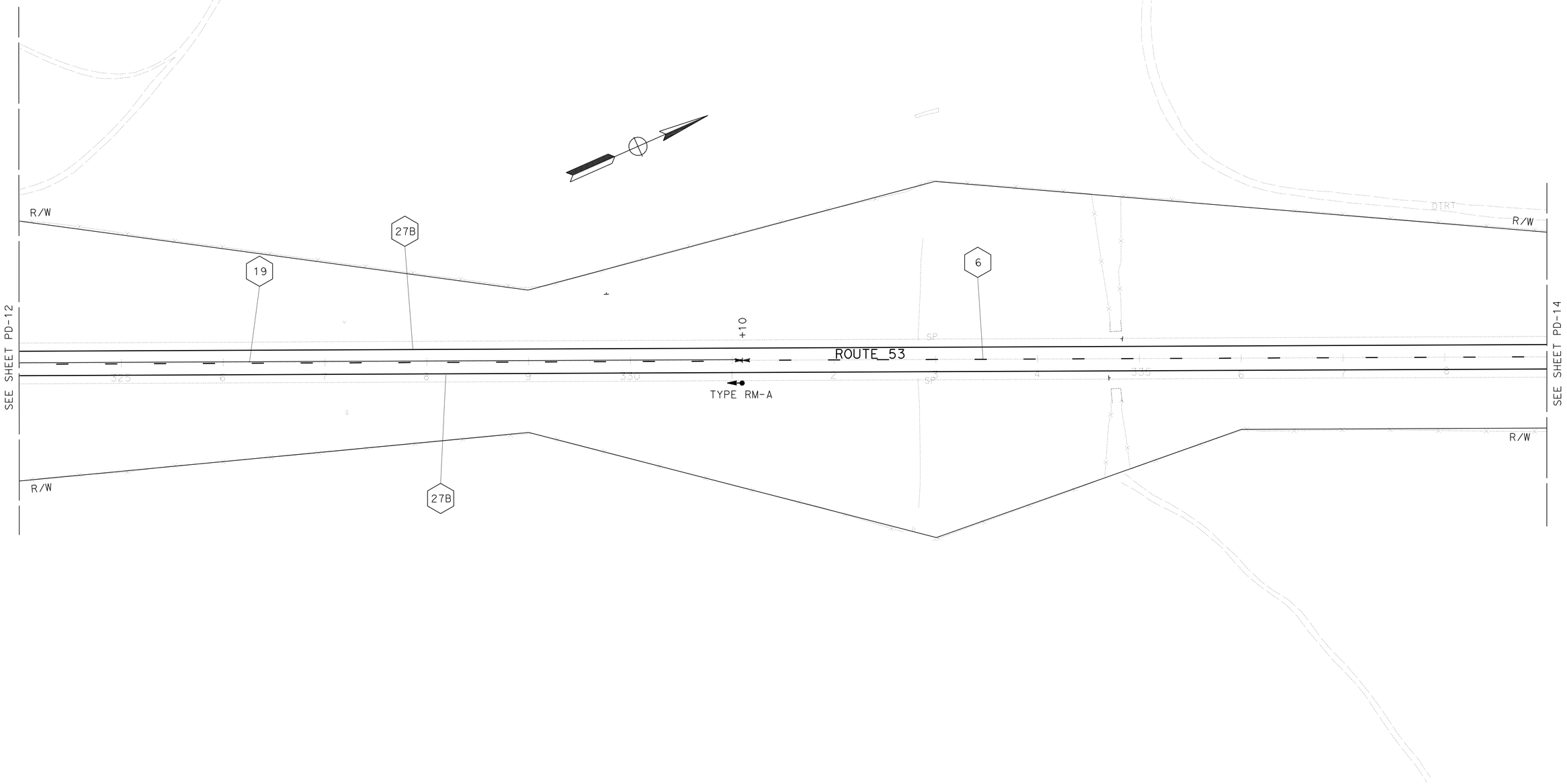


# PAVEMENT DELINEATION AND SIGN PLAN

SCALE: 1" = 50'

**PD-13**

THIS PLAN ACCURATE FOR PAVEMENT DELINEATION AND SIGN WORK ONLY.

| REVISED BY | DATE REVISED |
|---|---|
| | |

CALCULATED-DESIGNED BY: M. RAYYAN
CHECKED BY: P. STAFFORD
FUNCTIONAL SUPERVISOR: ERIC Y. WONG

STATE OF CALIFORNIA - DEPARTMENT OF TRANSPORTATION
Caltrans
TRAFFIC DESIGN BRANCH SACRAMENTO

06:37 14-JUN-2010 trmikes1 13986una013.dgn

LAST REVISION 00-00-00 | DATE PLOTTED => 14-JUN-2010 | TIME PLOTTED => 06:37

| Dist | COUNTY | ROUTE | POST MILES TOTAL PROJECT | SHEET No. | TOTAL SHEETS |
|---|---|---|---|---|---|
| 01 | Lak | 53 | 2.8/7.5 | 150 | 217 |

REGISTERED CIVIL ENGINEER 3-25-10 DATE

6-1-10
PLANS APPROVAL DATE

REGISTERED PROFESSIONAL ENGINEER
MOHAMMAD RAYYAN
No. 60591
Exp. 12-31-10
CIVIL
STATE OF CALIFORNIA

*THE STATE OF CALIFORNIA OR ITS OFFICERS OR AGENTS SHALL NOT BE RESPONSIBLE FOR THE ACCURACY OR COMPLETENESS OF SCANNED COPIES OF THIS PLAN SHEET.*

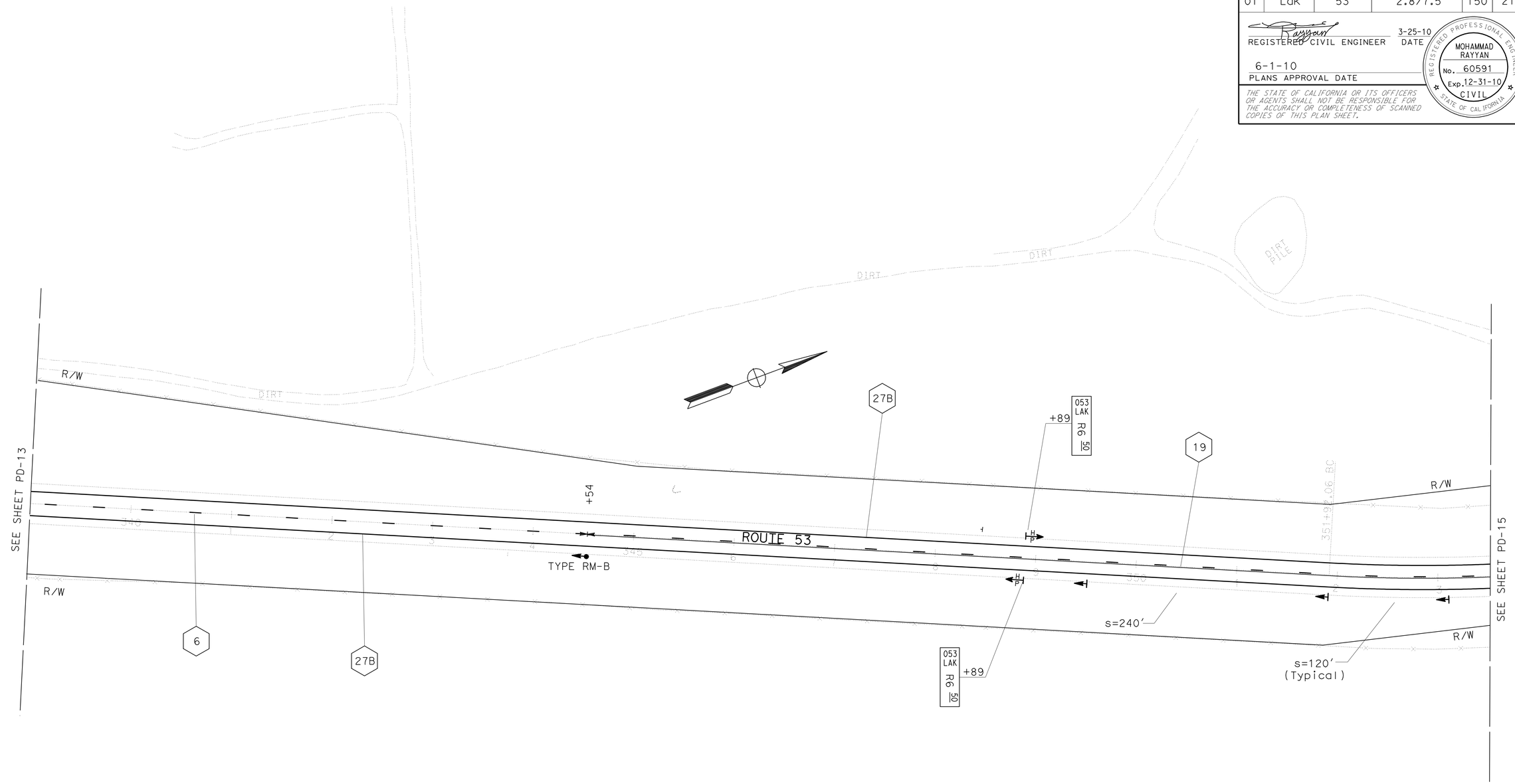


# PAVEMENT DELINEATION AND SIGN PLAN

SCALE: 1" = 50'

**PD-14**

THIS PLAN ACCURATE FOR PAVEMENT DELINEATION AND SIGN WORK ONLY.

| | |
|---|---|
| REVISED BY | M. RAYYAN |
| DATE REVISED | P. STAFFORD |
| CALCULATED-DESIGNED BY | FUNCTIONAL SUPERVISOR |
| CHECKED BY | ERIC Y. WONG |

STATE OF CALIFORNIA - DEPARTMENT OF TRANSPORTATION
Caltrans
TRAFFIC DESIGN BRANCH SACRAMENTO

06:37 14-JUN-2010 trmikesl 13986una014.dgn

LAST REVISION 00-00-00 DATE PLOTTED => 14-JUN-2010 TIME PLOTTED => 06:37

BORDER LAST REVISED 4/11/2008 | RELATIVE BORDER SCALE IS IN INCHES 0 1 2 3 | USERNAME => trmikesl DGN FILE => 13986una014.dgn | CU 03380 | EA 3986U1

| Dist | COUNTY | ROUTE | POST MILES TOTAL PROJECT | SHEET No. | TOTAL SHEETS |
|---|---|---|---|---|---|
| 01 | Lak | 53 | 2.8/7.5 | 151 | 217 |

REGISTERED CIVIL ENGINEER 3-25-10 DATE

6-1-10
PLANS APPROVAL DATE

REGISTERED PROFESSIONAL ENGINEER
MOHAMMAD RAYYAN
No. 60591
Exp. 12-31-10
CIVIL
STATE OF CALIFORNIA

*THE STATE OF CALIFORNIA OR ITS OFFICERS OR AGENTS SHALL NOT BE RESPONSIBLE FOR THE ACCURACY OR COMPLETENESS OF SCANNED COPIES OF THIS PLAN SHEET.*

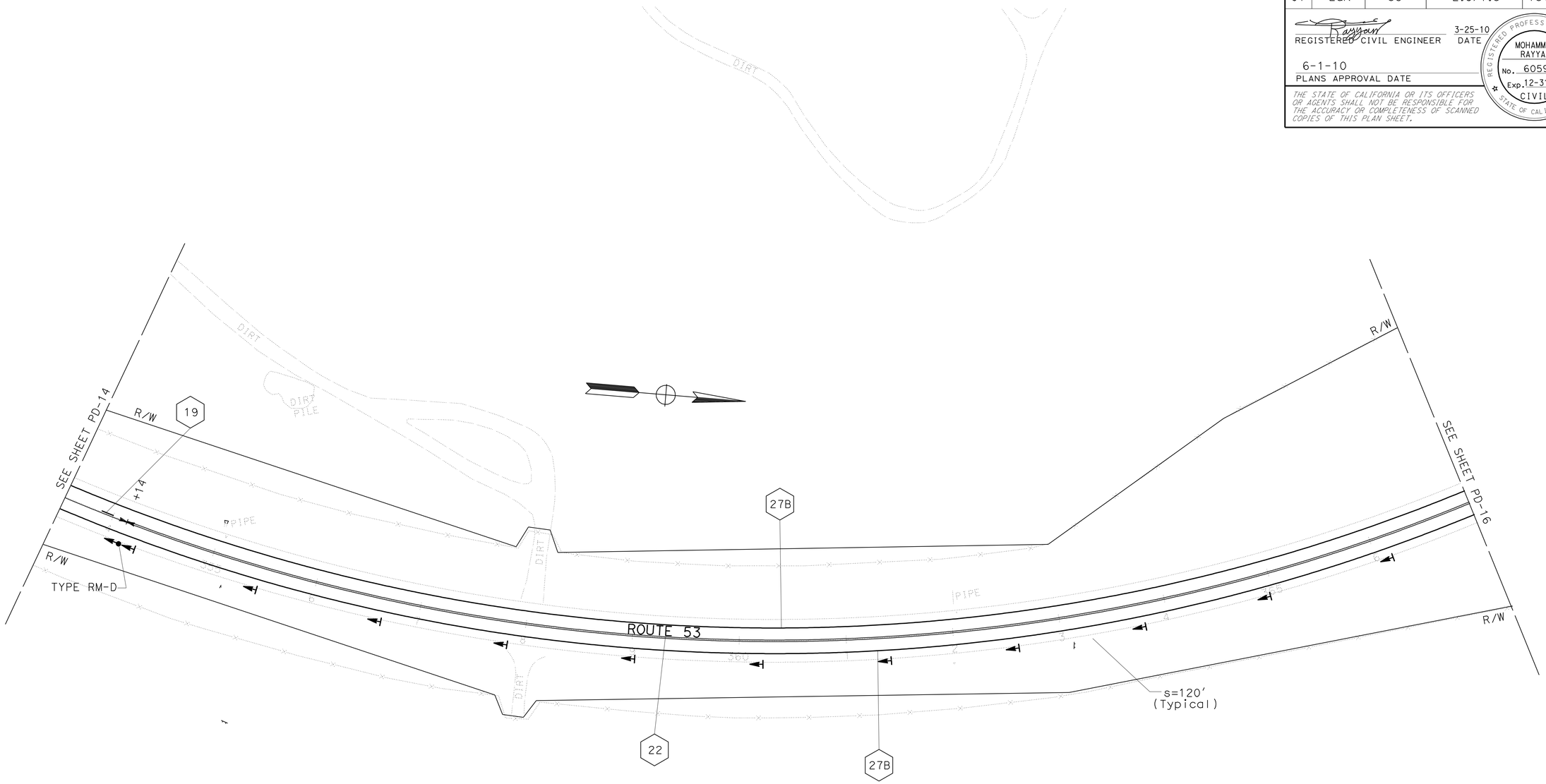


# PAVEMENT DELINEATION AND SIGN PLAN

SCALE: 1" = 50'

**PD-15**

THIS PLAN ACCURATE FOR PAVEMENT DELINEATION AND SIGN WORK ONLY.

| | |
|---|---|
| CALCULATED-DESIGNED BY | M. RAYYAN |
| CHECKED BY | P. STAFFORD |
| REVISED BY | |
| DATE REVISED | |
| FUNCTIONAL SUPERVISOR | ERIC Y. WONG |

STATE OF CALIFORNIA - DEPARTMENT OF TRANSPORTATION
Caltrans
TRAFFIC DESIGN BRANCH SACRAMENTO

06:37 14-JUN-2010 trmikesl 13986una015.dgn

LAST REVISION 00-00-00 | DATE PLOTTED => 14-JUN-2010 | TIME PLOTTED => 06:37

| Dist | COUNTY | ROUTE | POST MILES TOTAL PROJECT | SHEET No. | TOTAL SHEETS |
|---|---|---|---|---|---|
| 01 | Lak | 53 | 2.8/7.5 | 152 | 217 |

REGISTERED CIVIL ENGINEER 3-25-10 DATE

6-1-10
PLANS APPROVAL DATE

REGISTERED PROFESSIONAL ENGINEER
MOHAMMAD RAYYAN
No. 60591
Exp. 12-31-10
CIVIL
STATE OF CALIFORNIA

*THE STATE OF CALIFORNIA OR ITS OFFICERS OR AGENTS SHALL NOT BE RESPONSIBLE FOR THE ACCURACY OR COMPLETENESS OF SCANNED COPIES OF THIS PLAN SHEET.*

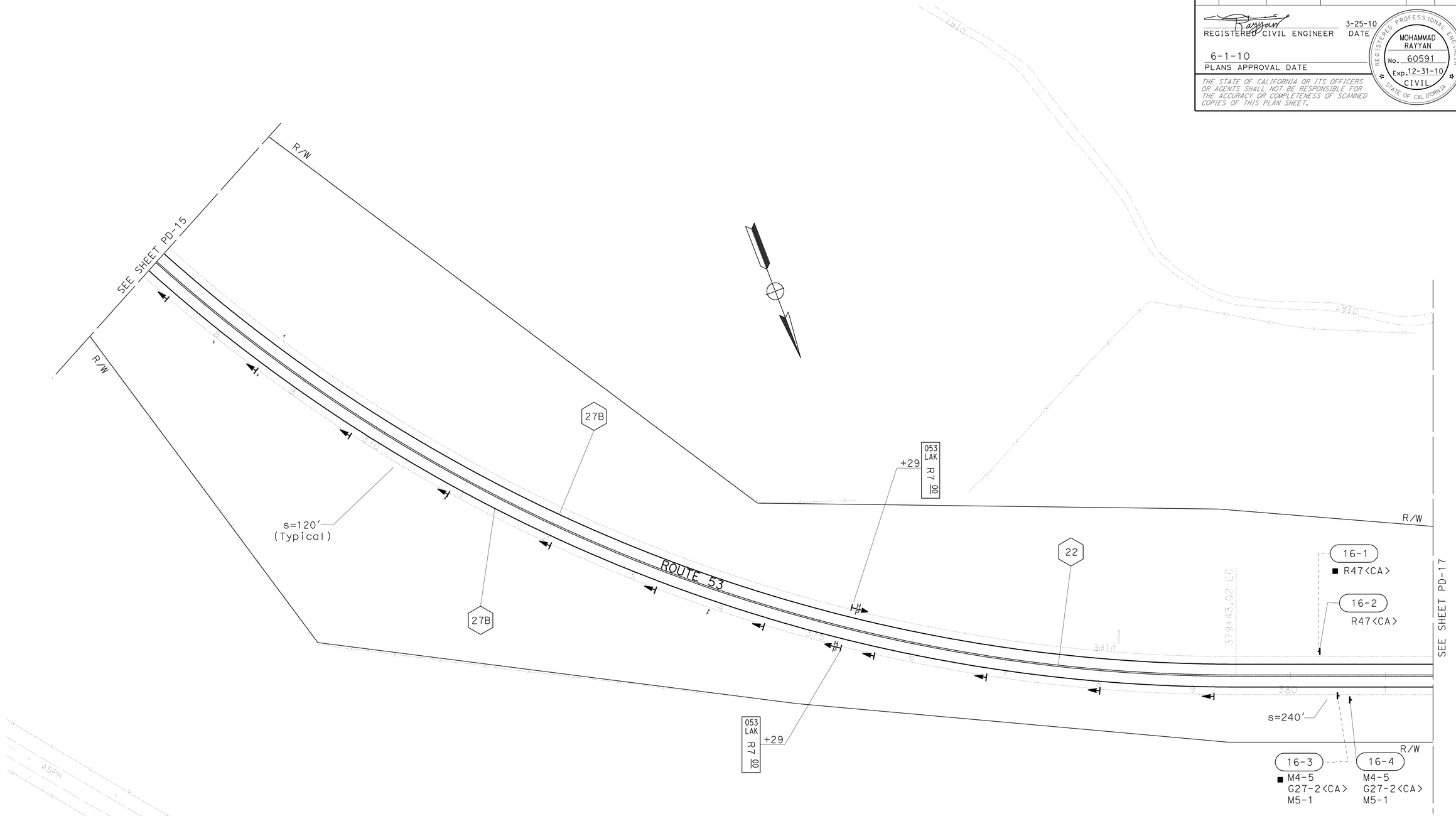


# PAVEMENT DELINEATION AND SIGN PLAN

SCALE: 1" = 50'

**PD-16**

THIS PLAN ACCURATE FOR PAVEMENT DELINEATION AND SIGN WORK ONLY.

| REVISED BY | DATE REVISED |
|---|---|
| | |

CALCULATED-DESIGNED BY: M. RAYYAN
CHECKED BY: P. STAFFORD
FUNCTIONAL SUPERVISOR: ERIC Y. WONG

STATE OF CALIFORNIA - DEPARTMENT OF TRANSPORTATION
Caltrans
TRAFFIC DESIGN BRANCH SACRAMENTO

06:37 14-JUN-2010 trmikesl 13986una016.dgn

LAST REVISION 00-00-00 | DATE PLOTTED => 14-JUN-2010 | TIME PLOTTED => 06:37

| Dist | COUNTY | ROUTE | POST MILES TOTAL PROJECT | SHEET No. | TOTAL SHEETS |
|---|---|---|---|---|---|
| 01 | Lak | 53 | 2.8/7.5 | 153 | 217 |

REGISTERED CIVIL ENGINEER 3-25-10 DATE

6-1-10
PLANS APPROVAL DATE

REGISTERED PROFESSIONAL ENGINEER MOHAMMAD RAYYAN No. 60591 Exp. 12-31-10 CIVIL STATE OF CALIFORNIA

*THE STATE OF CALIFORNIA OR ITS OFFICERS OR AGENTS SHALL NOT BE RESPONSIBLE FOR THE ACCURACY OR COMPLETENESS OF SCANNED COPIES OF THIS PLAN SHEET.*

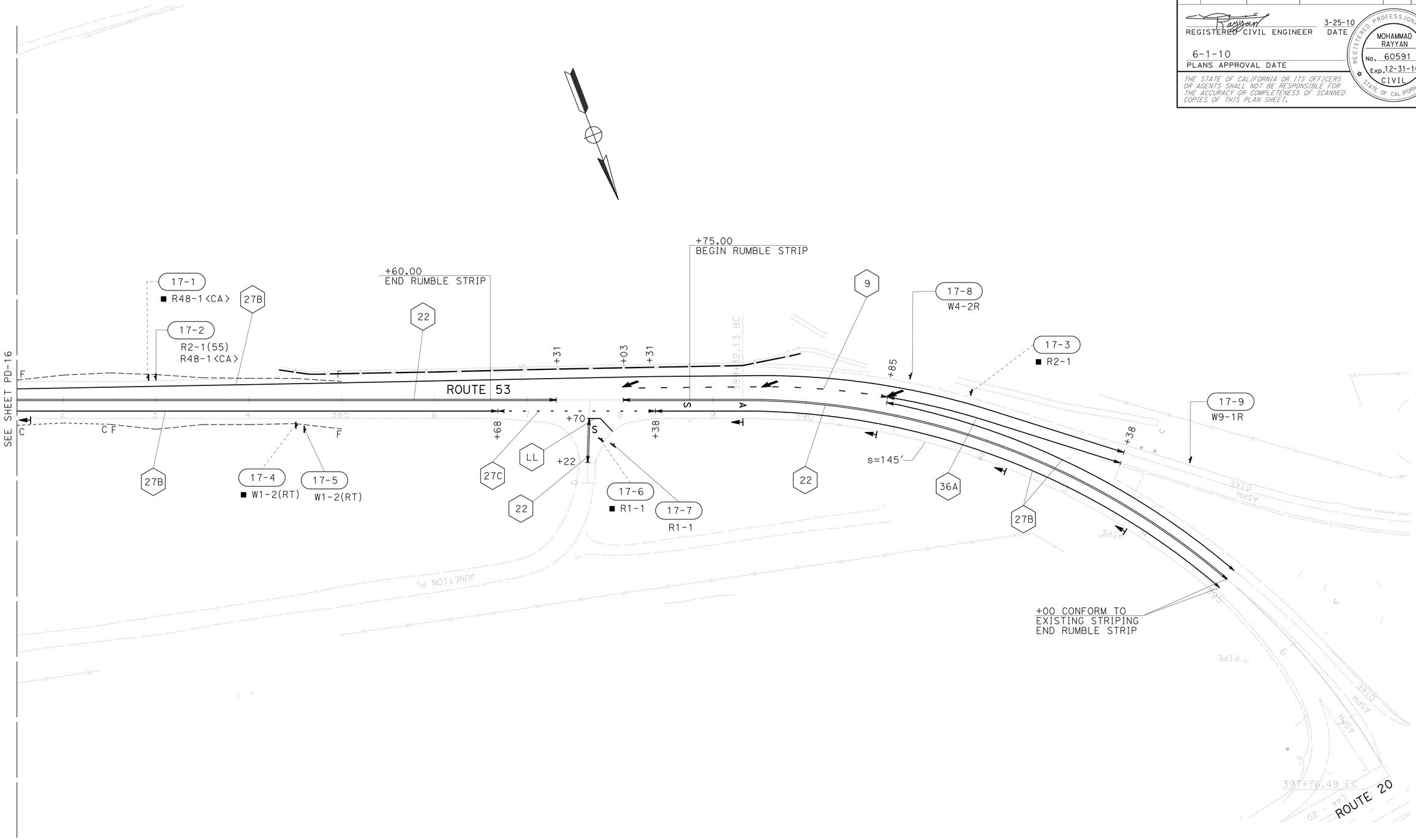


# PAVEMENT DELINEATION AND SIGN PLAN

SCALE: 1" = 50'

THIS PLAN ACCURATE FOR PAVEMENT DELINEATION AND SIGN WORK ONLY.

**PD-17**

| REVISED BY | DATE REVISED |
|---|---|
| | |

CALCULATED-DESIGNED BY: M. RAYYAN
CHECKED BY: P. STAFFORD
FUNCTIONAL SUPERVISOR: ERIC Y. WONG

STATE OF CALIFORNIA - DEPARTMENT OF TRANSPORTATION
Caltrans
TRAFFIC DESIGN BRANCH SACRAMENTO

06:37 14-JUN-2010 trmikesl 13986una017.dgn

LAST REVISION 00-00-00
DATE PLOTTED => 14-JUN-2010
TIME PLOTTED => 06:37

| Dist | COUNTY | ROUTE | POST MILES TOTAL PROJECT | SHEET No. | TOTAL SHEETS |
|---|---|---|---|---|---|
| 01 | Lak | 53 | 2.8/7.5 | 154 | 217 |

REGISTERED CIVIL ENGINEER 3-25-10 DATE

6-1-10
PLANS APPROVAL DATE

REGISTERED PROFESSIONAL ENGINEER
MOHAMMAD RAYYAN
No. 60591
Exp. 12-31-10
CIVIL
STATE OF CALIFORNIA

*THE STATE OF CALIFORNIA OR ITS OFFICERS OR AGENTS SHALL NOT BE RESPONSIBLE FOR THE ACCURACY OR COMPLETENESS OF SCANNED COPIES OF THIS PLAN SHEET.*

# PAVEMENT DELIEATION AND SIGN PLAN

SCALE: 1" = 50'

**PD-18**

THIS PLAN ACCURATE FOR PAVEMENT DELINEATION AND SIGN WORK ONLY

| REVISED BY | DATE REVISED |
|---|---|
| | |

CALCULATED-DESIGNED BY: M. RAYYAN
CHECKED BY: P. STAFFORD
FUNCTIONAL SUPERVISOR: ERIC Y. WONG

STATE OF CALIFORNIA - DEPARTMENT OF TRANSPORTATION
Caltrans
TRAFFIC DESIGN BRANCH SACRAMENTO

06:37 14-JUN-2010 trmikesl 13986una018.dgn

LAST REVISION 00-00-00
DATE PLOTTED => 14-JUN-2010
TIME PLOTTED => 06:37

BORDER LAST REVISED 4/11/2008
RELATIVE BORDER SCALE IS IN INCHES 0 1 2 3
USERNAME => trmikesl
DGN FILE => 13986una018.dgn
CU 03380
EA 3986U1

| Dist | COUNTY | ROUTE | POST MILES TOTAL PROJECT | SHEET No. | TOTAL SHEETS |
|---|---|---|---|---|---|
| 01 | Lak | 53 | 2.8/7.5 | 155 | 217 |

REGISTERED CIVIL ENGINEER 3-25-10 DATE

6-1-10
PLANS APPROVAL DATE

REGISTERED PROFESSIONAL ENGINEER MOHAMMAD RAYYAN No. 60591 Exp. 12-31-10 CIVIL STATE OF CALIFORNIA

*THE STATE OF CALIFORNIA OR ITS OFFICERS OR AGENTS SHALL NOT BE RESPONSIBLE FOR THE ACCURACY OR COMPLETENESS OF SCANNED COPIES OF THIS PLAN SHEET.*

**NOTE:**

ALL RUMBLE STRIP AREAS SHOWN ON PLAN SHEETS SHALL BE VERIFIED WITH THE APPROPRIATE HIGHWAY MAINTENANCE SUPERVISOR TO ASSURE THAT PLANNED INSTALLATION LOCATIONS WILL NOT IMPEDE FUTURE HIGHWAY MAINTENANCE WORK ACTIVITIES DURING ADVERSE WEATHER CONDITIONS.

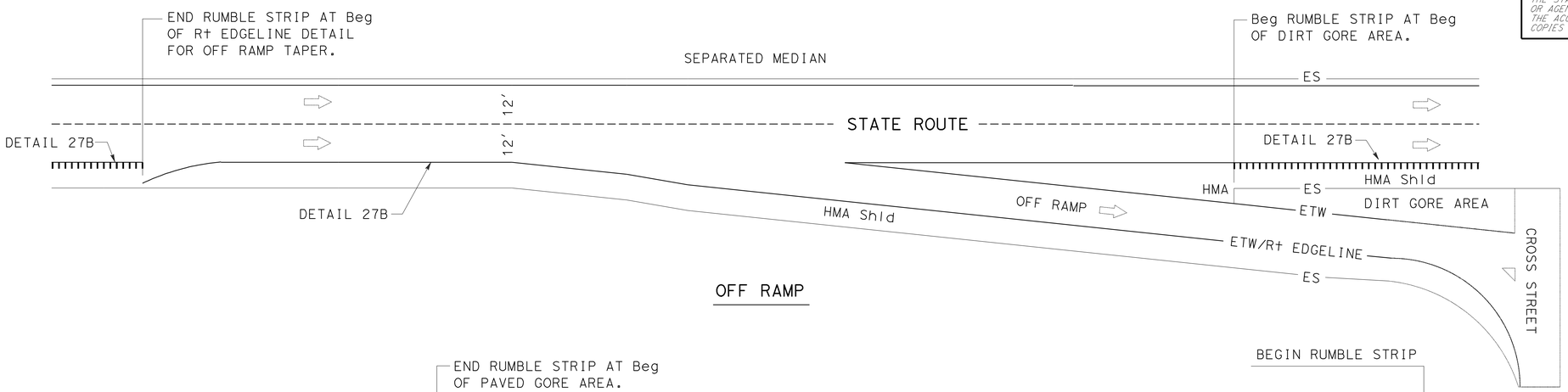


OFF RAMP

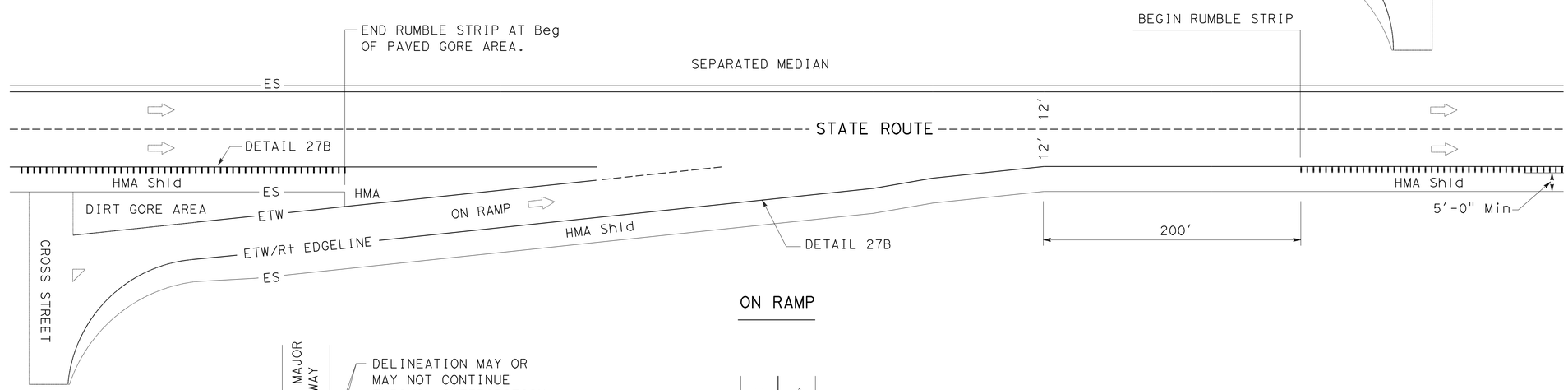


ON RAMP

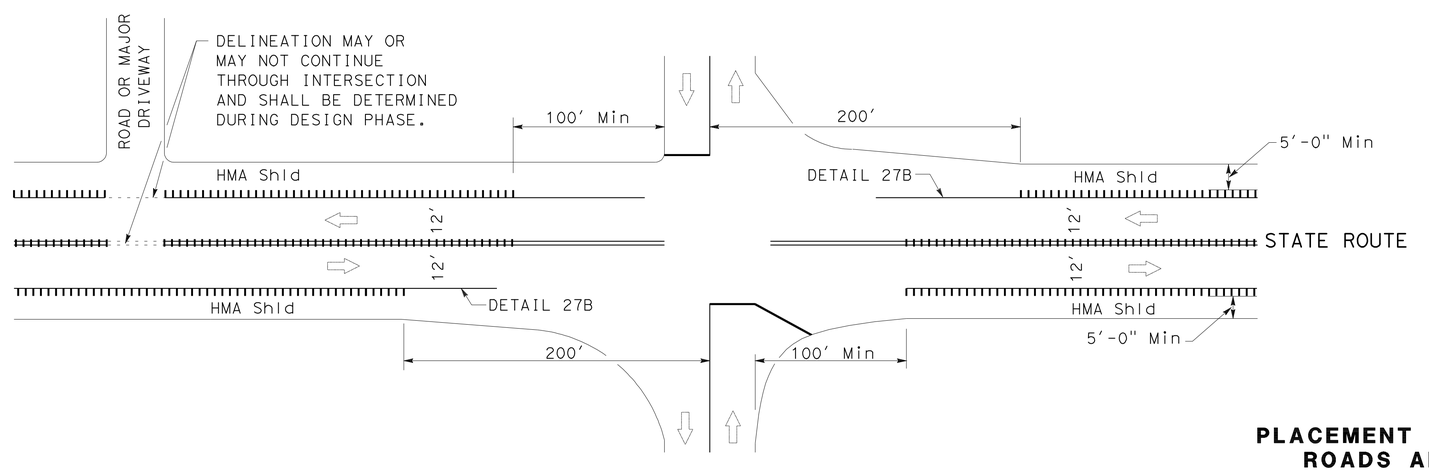


INTERSECTING ROADS AND MAJOR DRIVEWAYS

**LEGEND**

DIRECTION OF TRAVEL

RUMBLE STRIP (GROUND-IN)

**PLACEMENT AT INTERSECTING RAMPS, ROADS AND MAJOR DRIVEWAYS**

**STANDARD GROUND IN RUMBLE STRIP**

# PAVEMENT DELINEATION DETAIL

NO SCALE

**PDD-1**

STATE OF CALIFORNIA - DEPARTMENT OF TRANSPORTATION
Caltrans
TRAFFIC DESIGN BRANCH SACRAMENTO

FUNCTIONAL SUPERVISOR: ERIC Y. WONG
CALCULATED-DESIGNED BY: M. RAYYAN
CHECKED BY: P. STAFFORD
REVISED BY / DATE REVISED

06:37 14-JUN-2010 trmikesl 13986unb001.dgn

LAST REVISION 00-00-00 | DATE PLOTTED => 14-JUN-2010 | TIME PLOTTED => 06:37

BORDER LAST REVISED 4/11/2008 | RELATIVE BORDER SCALE IS IN INCHES 0 1 2 3 | USERNAME => trmikesl | DGN FILE => 13986unb001.dgn | CU 03380 | EA 3986U1

| Dist | COUNTY | ROUTE | POST MILES TOTAL PROJECT | SHEET No. | TOTAL SHEETS |
|---|---|---|---|---|---|
| 01 | Lak | 53 | 2.8/7.5 | 156 | 217 |

REGISTERED CIVIL ENGINEER 3-25-10 DATE

6-1-10
PLANS APPROVAL DATE

REGISTERED PROFESSIONAL ENGINEER
MOHAMMAD RAYYAN
No. 60591
Exp. 12-31-10
CIVIL
STATE OF CALIFORNIA

*THE STATE OF CALIFORNIA OR ITS OFFICERS OR AGENTS SHALL NOT BE RESPONSIBLE FOR THE ACCURACY OR COMPLETENESS OF SCANNED COPIES OF THIS PLAN SHEET.*

NOTES:

1. RUMBLE STRIPS, AS SHOWN ON THIS PLAN SHALL NOT BE CONSTRUCTED ON BRIDGE DECKS, BRIDGE APPROACH SLABS, RAMPS, PUBLIC AND PRIVATE ROAD APPROACHES AND MAJOR (COMMERCIAL ENTRANCE OR MULTIPLE RESIDENTS) DRIVEWAYS.
2. ALTERNATE #1 and 2 'OUTSIDE/RIGHT SHOULDER GROUND IN RUMBLE STRIP' DEPTH SHALL BE 5/16".
3. ALTERNATE #1 OUTSIDE/RIGHT SHOULDER GROUND IN RUMBLE STRIP FOR USE WITH ALL FREEWAYS & 4 LANE HIGHWAYS.
4. ALTERNATE #2 OUTSIDE/RIGHT SHOULDER GROUND IN RUMBLE STRIP FOR USE WITH CONVENTIONAL 2 LANE & EXPRESSWAYS.
5. EXCEPTION: WHEN A CONVENTIONAL 2 LANE OR EXPRESSWAY HIGHWAY HAS SHOULDER WIDTHS THAT MEETS OR EXCEEDS 5 FEET, ALTERNATE #1 MAY BE CONSIDERED. CONTACT DIST. 1 TRAFFIC SAFETY FOR APPROVAL

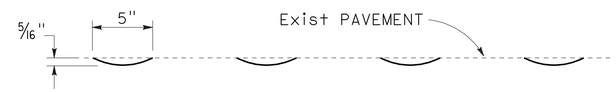


ELEVATION

APPLIES TO ALL 'ALTERNATE OUTSIDE/RIGHT SHOULDER GROUND IN RUMBLE STRIP'

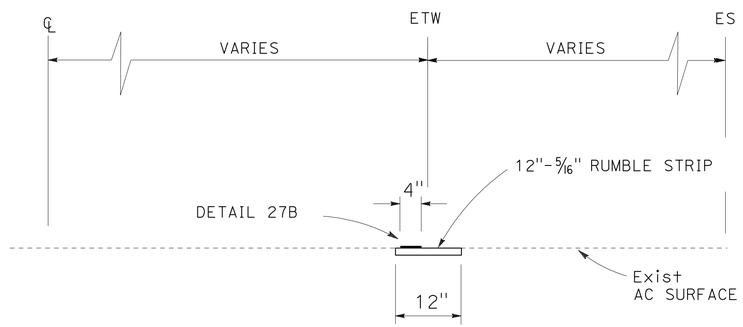


SECTION A-A

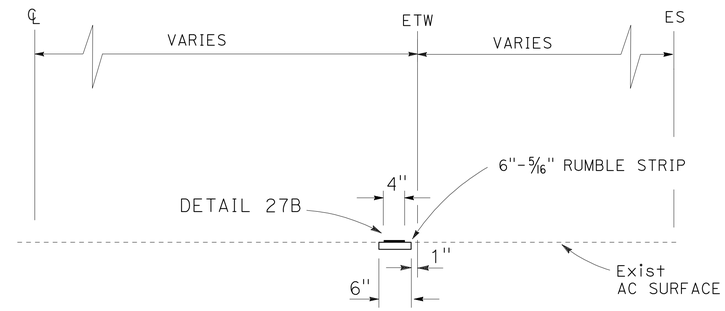


SECTION B-B

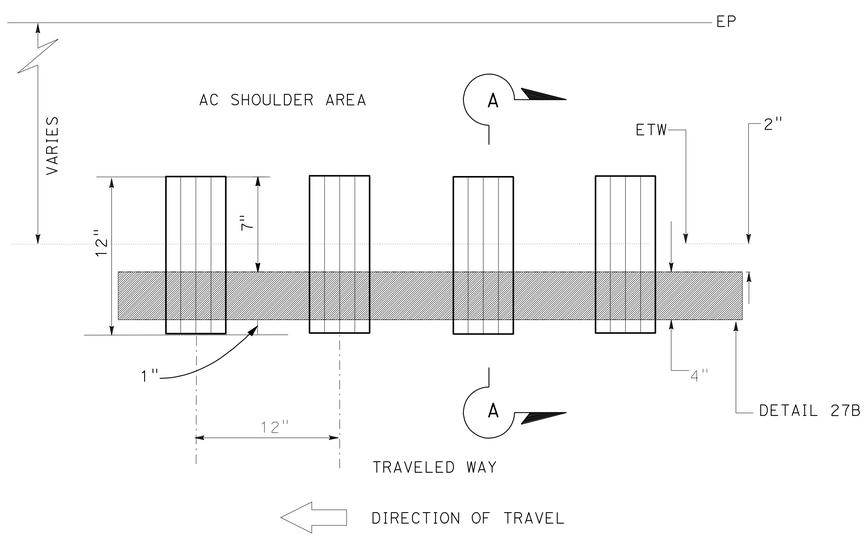


PLAN

**ALTERNATE #1 OUTSIDE/RIGHT SHOULDER GROUND IN RUMBLE STRIP (SEE NOTES ABOVE)**

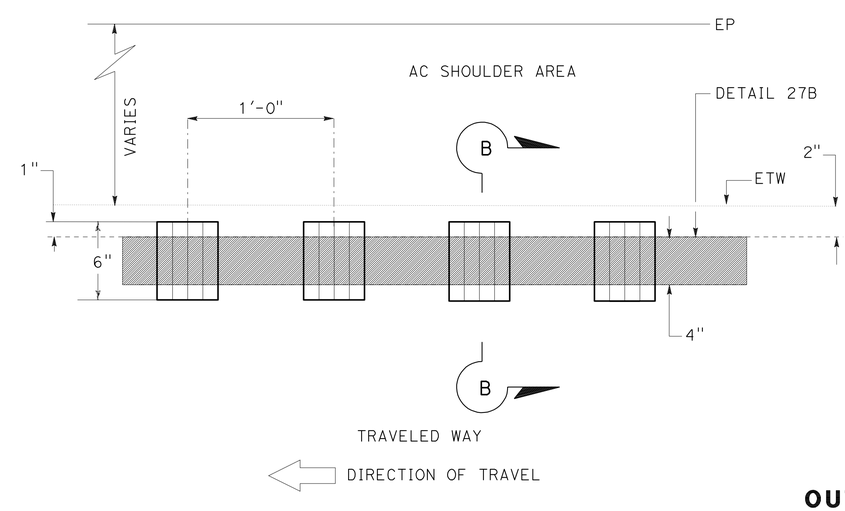


PLAN

**ALTERNATE #2 OUTSIDE/RIGHT SHOULDER GROUND IN RUMBLE STRIP (SEE NOTES ABOVE)**

**OUTSIDE/RIGHT SHOULDER APPLICATION**

**ALTERNATE GROUND-IN RUMBLE STRIP**

# PAVEMENT DELINEATION DETAIL

NO SCALE

**PDD-2**

REVISED BY | DATE REVISED
M. RAYYAN | P. STAFFORD
CALCULATED-DESIGNED BY | CHECKED BY
FUNCTIONAL SUPERVISOR
ERIC Y. WONG

STATE OF CALIFORNIA - DEPARTMENT OF TRANSPORTATION
Caltrans
TRAFFIC DESIGN BRANCH SACRAMENTO

06:38 14-JUN-2010 trmikesl 13986unb002.dgn

LAST REVISION 00-00-00 | DATE PLOTTED => 14-JUN-2010 | TIME PLOTTED => 06:38

| Dist | COUNTY | ROUTE | POST MILES TOTAL PROJECT | SHEET No. | TOTAL SHEETS |
|---|---|---|---|---|---|
| 01 | Lak | 53 | 2.8/7.5 | 157 | 217 |

REGISTERED CIVIL ENGINEER 5-4-10 DATE

6-1-10
PLANS APPROVAL DATE

REGISTERED PROFESSIONAL ENGINEER MOHAMMAD RAYYAN No. 60591 Exp. 12-31-10 CIVIL STATE OF CALIFORNIA

*THE STATE OF CALIFORNIA OR ITS OFFICERS OR AGENTS SHALL NOT BE RESPONSIBLE FOR THE ACCURACY OR COMPLETENESS OF SCANNED COPIES OF THIS PLAN SHEET.*

## PAVEMENT MARKER (RECESSED)

| Detail | Retroreflective | | | Non-reflective |
|---|---|---|---|---|
| | Type D | Type G | Type H | Type A |
| | EA | EA | EA | EA |
| 6 | 46 | | | |
| 9 | | 40 | | |
| 13 | | 107 | | 404 |
| 19 | 100 | | 194 | |
| 22 | 996 | | | |
| 25 | 28 | | 194 | |
| 29 | 236 | | | |
| 32 | 527 | | | |
| 36 | | 52 | | |
| 36A | | 14 | | |
| 36B | | 13 | | |
| 38 | | 103 | | |
| Subtotal | 1,933 | 329 | 388 | 404 |
| Total | 2,650 | | | 404 |

## THERMOPLASTIC PAVEMENT MARKING

| Description | QUANTITY | AREA |
|---|---|---|
| | | SQFT |
| Limit Line | 10 | 301 |
| Crosswalk | 1 | 221 |
| Chevrons | 42 | 732 |
| "STOP" | 6 @ 22 $ft^2$ | 132 |
| "SIGNAL" | 3 @ 32 $ft^2$ | 96 |
| "AHEAD" | 4 @ 31 $ft^2$ | 124 |
| Type II Arrow (Rt) | 4 @ 45 $ft^2$ | 180 |
| TYPE III ARROW (Rt) | 4 @ 42 $ft^2$ | 168 |
| TYPE III ARROW (Lt) | 13 @ 42 $ft^2$ | 546 |
| TYPE III ARROW (B) | 2 @ 73 $ft^2$ | 146 |
| TYPE V ARROW | 11 @ 33 $ft^2$ | 363 |
| TYPE VI ARROW | 18 @ 42 $ft^2$ | 756 |
| Total | | 3,765 |

## 4" THERMOPLASTIC TRAFFIC STRIPE (BROKEN 12-3)

| Detail | LF |
|---|---|
| 27C | 375 |
| Total | 375 |

## 4" THERMOPLASTIC TRAFFIC STRIPE (RECESSED) (BROKEN 17-7)

| Detail | LF |
|---|---|
| 9 | 1,708 |
| Total | 1,708 |

## 4" THERMOPLASTIC TRAFFIC STRIPE (BROKEN 36-12)

| Detail | LF |
|---|---|
| 6 | 2,112 |
| 11 | 5,073 |
| 19 | 4,538 |
| 32 | 7,347 |
| Total | 19,070 |

## 4" THERMOPLASTIC TRAFFIC STRIPE

| Detail | LF |
|---|---|
| 19 | 4,538 |
| 22 | 23,114 |
| 27B | 49,096 |
| 29 | 11,068 |
| 32 | 7,347 |
| 40 | 100 |
| 25 | 1280 |
| Total | 96,543 |

## 8" THERMOPLASTIC TRAFFIC STRIPE

| Detail | LF |
|---|---|
| 36 | 1,115 |
| 36A | 288 |
| 36B | 256 |
| 38 | 2,299 |
| | |
| Total | 3,958 |

# PAVEMENT DELINEATION QUANTITIES

**PDQ-1**

REVISED BY | DATE REVISED
M. RAYYAN
CALCULATED-DESIGNED BY | CHECKED BY
FUNCTIONAL SUPERVISOR
ERIC Y. WONG

STATE OF CALIFORNIA - DEPARTMENT OF TRANSPORTATION
Caltrans
TRAFFIC DESIGN BRANCH SACRAMENTO

06:38 14-JUN-2010 trmikesl 13986unc001.dgn

LAST REVISION 00-00-00 | DATE PLOTTED => 14-JUN-2010 TIME PLOTTED => 06:38

| Dist | COUNTY | ROUTE | POST MILES TOTAL PROJECT | SHEET No. | TOTAL SHEETS |
|---|---|---|---|---|---|
| 01 | Lak | 53 | 2.8/7.5 | 158 | 217 |

REGISTERED CIVIL ENGINEER DATE 5-4-10

6-1-10
PLANS APPROVAL DATE

REGISTERED PROFESSIONAL ENGINEER
MOHAMMAD RAYYAN
No. 60591
Exp. 12-31-10
CIVIL
STATE OF CALIFORNIA

*THE STATE OF CALIFORNIA OR ITS OFFICERS OR AGENTS SHALL NOT BE RESPONSIBLE FOR THE ACCURACY OR COMPLETENESS OF SCANNED COPIES OF THIS PLAN SHEET.*

## DELINEATOR, OBJECT MARKER, & HIGHWAY POST MARKER

| Sheet Number | Delineator (Class 1) | Object Marker | | | | MILEPOST MARKER |
|---|---|---|---|---|---|---|
| | Type F-1 | Type RM-A | Type RM-B | Type RM-C | Type RM-D | |
| | (EA) | (EA) | (EA) | (EA) | (EA) | (EA) |
| | | | | | | |
| PD-2 | | | | | | 2 |
| PD-3 | 6 | | | | | 2 |
| PD-4 | 8 | | | | | |
| PD-5 | 1 | | | | | 2 |
| PD-6 | 3 | | 1 | | | |
| PD-7 | 12 | | | | 1 | 2 |
| PD-8 | 4 | | | | | |
| PD-9 | | | | | | 2 |
| PD-10 | 11 | | | 1 | | |
| PD-11 | 1 | 1 | 1 | | | 2 |
| PD-12 | | | | 1 | 1 | 2 |
| PD-13 | | 1 | | | | |
| PD-14 | 3 | | 1 | | | 2 |
| PD-15 | 11 | | | | 1 | |
| PD-16 | 11 | | | | | 2 |
| PD-17 | 5 | | | | | |
| Subtotal | 76 | 2 | 3 | 2 | 3 | 18 |
| Total | 76 | 10 | | | | 18 |

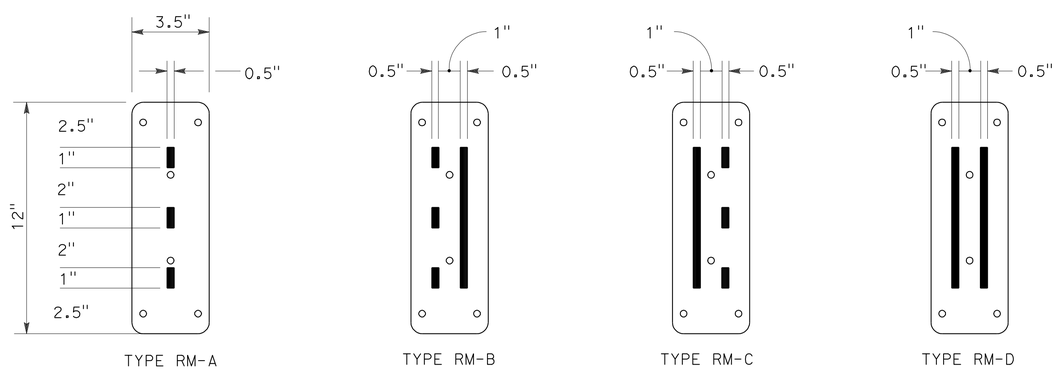


OBJECT MARKER (TYPE RM)
(STRIPE REFERENCE MARKER)

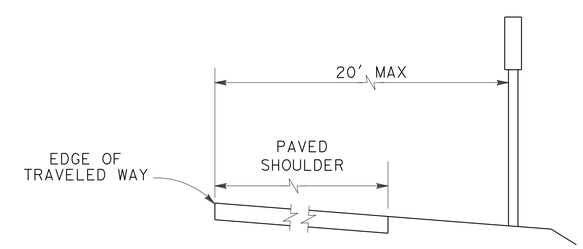


MARKER POSITIONING

# PAVEMENT DELINEATION QUANTITIES

## PDQ-2

REVISED BY | DATE REVISED
M. RAYYAN
CALCULATED-DESIGNED BY | CHECKED BY
FUNCTIONAL SUPERVISOR
ERIC Y. WONG

STATE OF CALIFORNIA - DEPARTMENT OF TRANSPORTATION
Caltrans
TRAFFIC DESIGN BRANCH SACRAMENTO

06:38 14-JUN-2010 trmikesl 13986unc002.dgn

LAST REVISION 00-00-00 | DATE PLOTTED => 14-JUN-2010 | TIME PLOTTED => 06:38

| Dist | COUNTY | ROUTE | POST MILES TOTAL PROJECT | SHEET No. | TOTAL SHEETS |
|---|---|---|---|---|---|
| 01 | Lak | 53 | 2.8/7.5 | 159 | 217 |

Patrice A. Stafford 3-25-10
REGISTERED CIVIL ENGINEER DATE

6-1-10
PLANS APPROVAL DATE

REGISTERED PROFESSIONAL ENGINEER
PATRICE A. STAFFORD
No. 61256
Exp. 6-30-11
CIVIL
STATE OF CALIFORNIA

THE STATE OF CALIFORNIA OR ITS OFFICERS OR AGENTS SHALL NOT BE RESPONSIBLE FOR THE ACCURACY OR COMPLETENESS OF SCANNED COPIES OF THIS PLAN SHEET.

# RUMBLE STRIP

| LOCATION (STA) | | DETAIL No. | RUMBLE STRIP (HMA, GROUND-IN INDENTATIONS) | | |
|---|---|---|---|---|---|
| | | | CENTER LINE | SHOULDER | |
| | | | | NB | SB |
| FROM | FROM | | STA | STA | STA |
| 16174 | 16225 | 22 | 0.51 | 0.51 | 0.51 |
| 16225 | 16700 | 29 | 9.50 | 4.75 | 4.75 |
| 16700 | 18336 | 22 | 16.36 | 16.36 | 16.36 |
| 18336 | 18771 | 29 | 8.70 | 4.35 | 4.35 |
| 18771 | 19310 | 22 | 5.39 | 5.39 | 5.39 |
| 19540 | 20390 | 32 | 17.00 | 8.50 | 8.50 |
| 20390 | 20510 | 29 | 2.40 | 1.20 | 1.20 |
| 20510 | 21074 | 22 | 5.64 | 5.64 | 5.64 |
| 21315 | 22000 | 29 | 13.70 | 6.85 | 6.85 |
| 22000 | 22816 | 22 | 8.16 | 8.16 | 8.16 |
| 22816 | 23632 | 19 | 8.16 | 8.16 | 8.16 |
| 23632 | 25327 | 22 | 16.95 | 16.95 | 16.95 |
| 25327 | 25717 | 29 | 7.80 | 3.90 | 3.90 |
| 25717 | 26111 | 22 | 3.94 | 3.94 | 3.94 |
| 26335 | 27080 | 22 | 7.45 | 7.45 | 7.45 |
| 27305 | 27560 | 22 | 2.25 | 2.55 | 2.55 |
| 27560 | 28093 | 29 | 10.66 | 5.33 | 5.33 |
| 28093 | 29000 | 22 | 9.07 | 9.07 | 9.07 |
| 29000 | 29750 | 19 | 7.50 | 7.50 | 7.50 |
| 29750 | 30518 | 6 | 7.68 | 7.68 | 7.68 |
| 30518 | 31766 | 19 | 12.48 | 12.48 | 12.48 |
| 31766 | 32246 | 22 | 4.80 | 4.80 | 4.80 |
| 32246 | 33010 | 19 | 7.64 | 7.64 | 7.64 |
| 33010 | 34454 | 6 | 14.44 | 14.44 | 14.44 |
| 34454 | 35414 | 19 | 9.60 | 9.60 | 9.60 |
| 35414 | 38660 | 22 | 32.46 | 32.46 | 32.46 |
| 38875 | 39500 | 22 | 6.25 | 6.25 | 6.25 |
| 40752 | 42026 | | | | 12.74 |
| SUB TOTAL | | | 256.49 | 221.61 | 234.35 |
| TOTAL | | | 256.49 | 455.96 | |

## PAVEMENT DELINEATION QUANTITIES

PDQ-3

CALCULATED-DESIGNED BY: P. STAFFORD
CHECKED BY: C. OLSON
FUNCTIONAL SUPERVISOR: C. OLSON
REVISED BY
DATE REVISED

STATE OF CALIFORNIA - DEPARTMENT OF TRANSPORTATION
Caltrans
NORTH REGION
OFFICE OF DESIGN, SOUTH
DESIGN BRANCH S10

06:38 14-JUN-2010 trmikesl 13986unc003.dgn

LAST REVISION 03-25-10
DATE PLOTTED => 14-JUN-2010
TIME PLOTTED => 06:38

| Dist | COUNTY | ROUTE | POST MILES TOTAL PROJECT | SHEET No. | TOTAL SHEETS |
|---|---|---|---|---|---|
| 01 | Lak | 53 | 2.8/7.5 | 160 | 217 |

Patrice A. Stafford 3-25-10
REGISTERED CIVIL ENGINEER DATE

6-1-10
PLANS APPROVAL DATE

REGISTERED PROFESSIONAL ENGINEER
PATRICE A. STAFFORD
No. 61256
Exp. 6-30-11
CIVIL
STATE OF CALIFORNIA

*THE STATE OF CALIFORNIA OR ITS OFFICERS OR AGENTS SHALL NOT BE RESPONSIBLE FOR THE ACCURACY OR COMPLETENESS OF SCANNED COPIES OF THIS PLAN SHEET.*

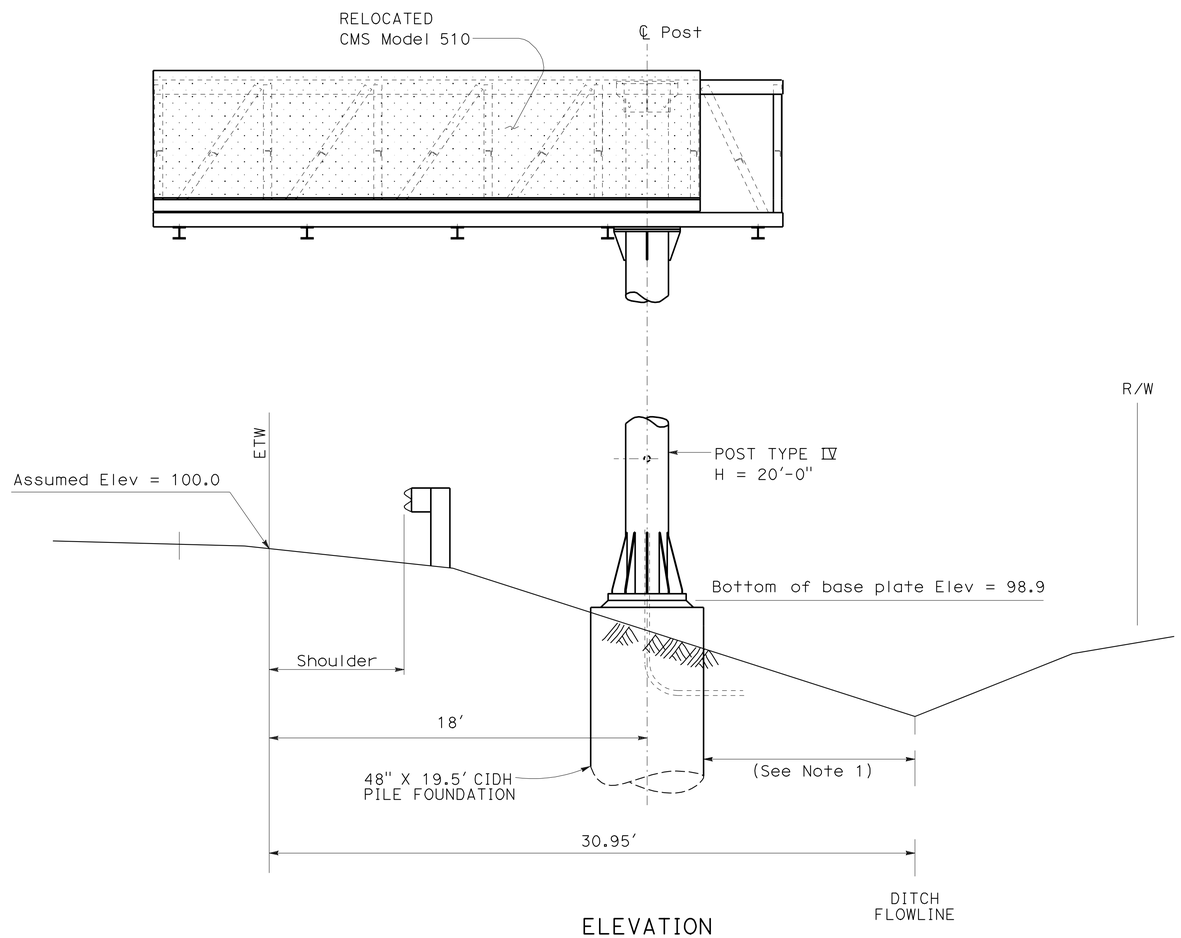


ELEVATION

NOTES:

1. CIDH pile foundation must not be placed within 4′ of ditch flowline.
2. 1-Side Walkway.

# SIGN DETAILS

NO SCALE

SD-1

| REVISED BY | DATE REVISED |
|---|---|
| | |

CALCULATED-DESIGNED BY: P. STAFFORD
CHECKED BY: C. OLSON
FUNCTIONAL SUPERVISOR: C. OLSON

STATE OF CALIFORNIA - DEPARTMENT OF TRANSPORTATION
Caltrans
NORTH REGION
OFFICE OF DESIGN, SOUTH
DESIGN BRANCH S10

06:38 14-JUN-2010 trmikesl 13986uoa001.dgn

LAST REVISION DATE PLOTTED => 14-JUN-2010
TIME PLOTTED => 06:38

| Dist | COUNTY | ROUTE | POST MILES TOTAL PROJECT | SHEET No. | TOTAL SHEETS |
|---|---|---|---|---|---|
| 01 | Lak | 53 | 2.8/7.5 | 161 | 217 |

REGISTERED CIVIL ENGINEER 5-4-10 DATE

6-1-10
PLANS APPROVAL DATE

REGISTERED PROFESSIONAL ENGINEER MOHAMMAD RAYYAN No. 60591 Exp. 12-31-10 CIVIL STATE OF CALIFORNIA

*THE STATE OF CALIFORNIA OR ITS OFFICERS OR AGENTS SHALL NOT BE RESPONSIBLE FOR THE ACCURACY OR COMPLETENESS OF SCANNED COPIES OF THIS PLAN SHEET.*

# ROADSIDE SIGN QUANTITIES

| SIGN NUMBER (SHT-No.) | SIGN CODE FEDERAL | SIGN CODE CALIFORNIA | PANEL SIZE (INCHES) | "C" DIM IN FEET | POST SIZE AND LENGTH (N) 4" X 4" | 4" X 6" | 6" X 6" | ROADSIDE SIGN ONE POST (EACH) | ROADSIDE SIGN TWO POST (EACH) | INSTALL SIGN (SSBM) (EACH) | REMOVE ROADSIDE SIGN PANEL (EACH) | REMOVE ROADSIDE SIGN (EACH) | RESET ROADSIDE SIGN (EACH) | REMARKS |
|---|---|---|---|---|---|---|---|---|---|---|---|---|---|---|
| 2-1 | | G8 | | | | | | | | | 1 | | | ← 40th Ave Lakeshore Dr → |
| 2-2 | | G8-7 | 96 X 36 | 5 | | | | | 1 | | | | | |
| 2-3 | | G81-24 | | | | | | | | | | 1 | | |
| 2-4 | | G81-24 | 72 X 30 | 5 | | 12′ | | | 1 | | | | | Tourist Information |
| 2-5 | R2-1(50) | R2(50) | | | | | | | | | | 1 | | |
| 2-6 | R2-1(50) | R2(50) | 36 X 48 | 5 | | 14′ | | 1 | | | | | | 50 MPH SPEED LIMIT |
| 2-7 | | R3(50) | | | | | | | | | | 1 | | |
| 2-8 | | R3(50) | 36 X 45 | 5 | | | | 1 | | | | | | END 50 SPEED LIMIT |
| 3-1 | | G7-1 | | | | | | | | | 1 | | | |
| 3-2 | | G7-1 | 48 X 18 | 5 | 8′ | | | 1 | | | | | | Polk St (STREET NAME) |
| 3-3 | W4-2R | W11 | 48 X 48 | 5 | | 14′ | | 1 | | | | | | LANE ENDS (Rt) |
| 4-1 | R1-1 | R1 | | | | | | | | | | 1 | | STOP |
| 4-2 | R1-1 | R1 | 30 X 30 | 5 | | | | 1 | | | | | | |
| 4-3 | | G8 | | | | | | | | | 1 | | | |
| 4-4 | W1G | | 90 X 24 | 5 | | | | | 1 | | | | | COUNTY LANDFILL USE 40TH AVE |
| 4-5 | | G7 | | | | | | | | | 1 | | | |
| 4-6 | | G7-1 | 48 X 18 | 5 | 8′ | | | 1 | | | | | | Polk St |
| 4-7 | R1-1 | R1 | | | | | | | | | 1 | | | |
| 4-8 | R1-1 | R1 | 30 X 30 | 5 | | 14′ | | 1 | | | | | | STOP |
| 4-9 | | W70 | | | | | | | | | 1 | | | |
| 4-10 | | W2-2L<br>G8 | | | | | | | | | 1<br>1 | | | |
| 4-11 | | G8-22 | 60 X 30 | 5 | | | | | 1 | | | | | ← Olympic Drive |
| 4-12 | W9-1R | W75 | 48 X 48 | 5 | | 14′ | | 1 | | | | | | RIGHT LANE ENDS |
| 5-1 | W3-1 | W17 | | | | | | | | | | 1 | | |
| 5-2 | W3-1 | W17 | 36 X 36 | 5 | | 14′ | | 1 | | | | | | STOP AHEAD |
| 5-3 | R1-1 | R1 | | | | | | | | | | 1 | | |
| 5-4 | R1-1<br>W4-4P | R1<br>SW1 | | | | | | | | | | 1 | | |
| 5-5 | S32<br>S32B<br>S32-1 | | | | | | | | | | | | 1<br>1<br>1 | |
| 5-6 | W4-1 | W59 | | | | | | | | | | 1 | | |
| 5-7 | W3-3 | W41 | 48 X 48 | 5 | | | | | | 1 | | | | SEE NOTE 4 SIGNAL AHEAD |
| 5-8 | | G8 | | | | | | | | | 1 | | | |
| 5-9 | | G8-22 | 60 X 30 | 5 | | | | | 1 | | | | | Olympic Drive → |
| 5-10 | | R61-11 | 36 X 30 | | | | | | | 1 | | | | SEE NOTE 5 |
| 5-11 | W1-7<br>OM1-3 | W56 | | | | | | | | | | 1<br>1 | | |
| 5-12 | W1-7<br>OM1-3 | W56<br>Type N | 48 X 24<br>18 X 18 | 5 | | | | | | 1<br>1 | | | | SEE NOTE 4 AND 6 |
| 5-13 | | R73-3 | 36 X 36 | | | | | | | 1 | | | | SEE NOTE 4 AND 6 |
| 5-14 | S32<br>S32B<br>S32-1 | | | | | | | | | | | | 1<br>1<br>1 | |
| 5-15 | | G8 | 54 X 24 | | | | | 1 | | | | | | |
| 5-16 | | G8 | 48 X 24 | | | | | | | 1 | | | | SEE NOTE 4 AND 6 |
| 6-1 | | W70 | | | | | | | | | | 1 | | |
| | | | | | | | SHEET TOTAL | 10 | 5 | 6 | 9 | 11 | 6 | |

## NOTES

1. EXACT LOCATION AND POSITION OF ROADSIDE SIGNS TO BE DETERMINED BY THE ENGINEER.
2. POST LENGTH GIVEN ARE APPROXIMATE. EXACT LENGTH TO BE DETERMINED BY THE ENGINEER.
3. "C" DIM=VERTICAL CLEARANCE EP TO BOTTOM OF SIGN PANEL.
4. (N) - NOT A SEPARATE PAY ITEM. FOR INFORMATION ONLY.
5. SIGN PANEL TO BE MOUNTED ON SIGNAL MAST ARM.
6. SIGN PANEL TO BE MOUNTED ON SIGNAL STANDARD.

## SIGN QUANTITIES

SQ-1

REVISED BY | DATE REVISED
M. RAYYAN
CALCULATED-DESIGNED BY | CHECKED BY
FUNCTIONAL SUPERVISOR
ERIC Y. WONG

STATE OF CALIFORNIA - DEPARTMENT OF TRANSPORTATION
Caltrans
TRAFFIC DESIGN BRANCH SACRAMENTO

06:38 14-JUN-2010 trmikes1 13986uoc001.dgn

LAST REVISION 00-00-00 | DATE PLOTTED => 14-JUN-2010 | TIME PLOTTED => 06:38

| Dist | COUNTY | ROUTE | POST MILES TOTAL PROJECT | SHEET No. | TOTAL SHEETS |
|---|---|---|---|---|---|
| 01 | Lak | 53 | 2.8/7.5 | 162 | 217 |

REGISTERED CIVIL ENGINEER 5-4-10 DATE

6-1-10
PLANS APPROVAL DATE

REGISTERED PROFESSIONAL ENGINEER MOHAMMAD RAYYAN No. 60591 Exp. 12-31-10 CIVIL STATE OF CALIFORNIA

*THE STATE OF CALIFORNIA OR ITS OFFICERS OR AGENTS SHALL NOT BE RESPONSIBLE FOR THE ACCURACY OR COMPLETENESS OF SCANNED COPIES OF THIS PLAN SHEET.*

# ROADSIDE SIGN QUANTITIES

| SIGN NUMBER (SHT-No.) | SIGN CODE FEDERAL | SIGN CODE CALIFORNIA | PANEL SIZE (INCHES) | "C" DIM IN FEET | POST SIZE AND LENGTH (N) 4" X 4" | 4" X 6" | 6" X 6" | ROADSIDE SIGN ONE POST (EACH) | ROADSIDE SIGN TWO POST (EACH) | INSTALL SIGN (SSBM) (EACH) | REMOVE ROADSIDE SIGN PANEL (EACH) | REMOVE ROADSIDE SIGN (EACH) | RESET ROADSIDE SIGN (EACH) | REMARKS |
|---|---|---|---|---|---|---|---|---|---|---|---|---|---|---|
| 8-1 | W4-2R | W11 | 48 X 48 | 5 | | 14′ | | 1 | | | | | | RIGHT LANE ENDS SYMBOL |
| 8-2 | | G9 | | | | | | | | | 1 | | | |
| 8-3 | | G9-5 | 78 X 36 | 5 | | 12′ | | | 1 | | | | | Clearlake CITY LIMIT POP 14890 ELEV 1350 |
| 8-4 | R1-1 | R1 | | | | | | | | | | 1 | | |
| 8-5 | R1-1 | R1 | 30 X 30 | 5 | | 14′ | | 1 | | | | | | STOP |
| 8-6 | | G8 | | | | | | | | | 1 | | | |
| 8-7 | | G8-22 | 72 X 30 | 5 | | 12′ | | | 1 | | | | | ← Old Highway |
| 8-8 | W9-1R | W75 | 48 X 48 | 5 | | 14′ | | 1 | | | | | | RIGHT LANE ENDS (TEXT) |
| 9-1 | | G8 | | | | | | | | | 1 | | | |
| 9-2 | | G8-22 | 72 X 30 | 5 | | 12′ | | | 1 | | | | | Old Highway → |
| 9-3 | | G8 | | | | | | | | | | 1 | | |
| 9-4 | | G8-22 | 78 X 30 | 5 | | 12′ | | | 1 | | | | | ← Oguiin Canyon Rd |
| 9-5 | | G8 | | | | | | | | | | 1 | | |
| 9-6 | | G8-22 | 78 X 30 | 5 | | 12′ | | | 1 | | | | | Oguiin Canyon Rd → |
| 9-7 | R1-1 | R1 | 30 X 30 | 5 | | 14′ | | 1 | | | | | | STOP |
| 9-8 | R1-1 | R1 | | | | | | | | | | 1 | | |
| 9-9 | W4-2R | W11 | 48 X 48 | 5 | | 14′ | | 1 | | | | | | RIGHT LANE ENDS (TEXT) |
| 9-10 | W9-1R | W75 | 48 X 48 | 5 | | 14′ | | 1 | | | | | | RIGHT LANE ENDS (TEXT) |
| 12-1 | S32 | | | | | | | | | | | | 1 | |
| | S32B | | | | | | | | | | | | 1 | |
| | S32A | | | | | | | | | | | | 1 | |
| 12-2 | S32 | | | | | | | | | | | | 1 | |
| | S32B | | | | | | | | | | | | 1 | |
| | S32A | | | | | | | | | | | | 1 | |
| 16-1 | | R47 | | | | | | | | | | 1 | | |
| 16-2 | | R47 | 52 X 36 | 5 | | | 14′ | 1 | | | | | | $1000 FINE FOR LITTERING |
| 16-3 | M4-5 | | | | | | | | | | | 1 | | |
| | | G27-2 | | | | | | | | | | 1 | | |
| | M5-1 | | | | | | | | | | | 1 | | |
| 16-4 | M4-5 (BLUE) | | 21 X 12 | | | | | 1 | | | | | | TO INTERSTATE CALIFORNIA 5 |
| | | G27-2 | 21 X 18 | 5 | 14′ | | | 1 | | | | | | |
| | M5-1 (R†) (BLUE) | | 21 X 15 | | | | | 1 | | | | | | |
| 17-1 | | R48-1 | | | | | | | | | | 1 | | |
| 17-2 | R2-1(55) | R2(55) R48-1 | 48 X 60 48 X 24 | 5 | | | | 1 1 | | | | | | SPEED LIMIT 55 RADAR ENFORCED |
| 17-3 | R2-1 | R2(55) | | | | | | | | | | 1 | | |
| 17-4 | W1-2(R†) | W5(R†) | | | | | | | | | | 1 | | |
| 17-5 | W1-2(R†) | W5(R†) | 36 X 36 | 5 | | 14′ | | 1 | | | | | | |
| 17-6 | R1-1 | R1 | | | | | | | | | | 1 | | |
| 17-7 | R1-1 | R1 | 30 X 30 | 5 | | 14′ | | 1 | | | | | | STOP |
| 17-8 | W4-2R | W11 | 48 X 48 | 5 | | 14′ | | 1 | | | | | | RIGHT LANE ENDS SYMBOL |
| 17-9 | W9-1R | W75 | 48 X 48 | 5 | | 14′ | | 1 | | | | | | RIGHT LANE ENDS (TEXT) |
| SHEET TOTAL FROM SQ-1 | | | | | | | | 10 | 5 | 6 | 9 | 11 | 6 | |
| SHEET TOTAL FROM SQ-2 | | | | | | | | 16 | 5 | | 3 | 12 | 6 | |
| TOTAL | | | | | | | | 26 | 10 | 6 | 12 | 23 | 12 | |

## SIGN QUANTITIES

SQ-2

REVISED BY | DATE REVISED

M. RAYYAN

CALCULATED-DESIGNED BY | CHECKED BY

FUNCTIONAL SUPERVISOR: ERIC Y. WONG

STATE OF CALIFORNIA - DEPARTMENT OF TRANSPORTATION
TRAFFIC DESIGN BRANCH SACRAMENTO

06:38 14-JUN-2010 trmikesl 13986uoc002.dgn

LAST REVISION 00-00-00 | DATE PLOTTED => 14-JUN-2010 TIME PLOTTED => 06:38

| Dist | COUNTY | ROUTE | POST MILES TOTAL PROJECT | SHEET No. | TOTAL SHEETS |
|---|---|---|---|---|---|
| 01 | Lak | 53 | 2.8/7.5 | 163 | 217 |

REGISTERED CIVIL ENGINEER 5-4-10 DATE

6-1-10
PLANS APPROVAL DATE

REGISTERED PROFESSIONAL ENGINEER MOHAMMAD RAYYAN No. 60591 Exp. 12-31-10 CIVIL STATE OF CALIFORNIA

*THE STATE OF CALIFORNIA OR ITS OFFICERS OR AGENTS SHALL NOT BE RESPONSIBLE FOR THE ACCURACY OR COMPLETENESS OF SCANNED COPIES OF THIS PLAN SHEET.*

# ROADSIDE SIGN PANEL QUANTITIES (CONTRACTOR-FURNISHED)

| SIGN CODE | SIGN MESSAGE/DESCRIPTION | SIGN SIZE L X D (INCHES) | SIGN AREA (SQFT) | NUMBER OF SIGNS | BACKGROUND SHEETING COLOR | BACKGROUND RETROREFLECTIVE ASTM TYPE | LEGEND SHEETING COLOR | LEGEND RETROREFLECTIVE ASTM TYPE | GRAFFITI FILM PREMIUM | FURNISH SINGLE SHEET ALUMINUM SIGN UNFRAMED 0.063" SQFT | UNFRAMED 0.080" SQFT | FRAMED 0.063" SQFT | FRAMED 0.080" SQFT |
|---|---|---|---|---|---|---|---|---|---|---|---|---|---|
| G7-1<CA><br>G7-1<CA> | Polk St<br>STREET NAME | 48 X 18<br>48 X 24 | 6.00<br>8.00 | 2<br>2 | GREEN | IV | WHITE | XI | X | | 28.00 | | |
| G8-22<CA> | Olympic Drive<br>STREET NAME<br>WITH ARROW | 60 X 30 | 12.50 | 4 | GREEN | IV | WHITE | XI | X | | 50.00 | | |
| G8-22<CA> | DESTINATION AND STREET NAME<br>WITH ARROW | 78 X 30 | 16.25 | 2 | GREEN | IV | WHITE | XI | X | | | 32.50 | |
| SG<CA> | GENERAL INFORMATION AND<br>STREET NAME | 90 X 24 | 15.00 | 1 | GREEN | IV | WHITE | XI | X | | | | 15.00 |
| G8-7<CA> | DESTINATION AND STREET NAME<br>WITH ARROW | 96 X 36 | 24.00 | 1 | GREEN | IV | WHITE | XI | X | | | | 24.00 |
| G9-5<CA> | CITY LIMIT | 78 X 36 | 19.50 | 1 | GREEN | IV | WHITE | XI | X | | | 19.50 | |
| G27-2<CA> | INTERSTATE X (Route Marker) | 21 X 18 | 3.50 | 1 | RED,BLUE | III | WHITE | III | X | 3.50 | | | |
| G81-24<CA> | TOURIST INFORMATION | 72 X 30 | 15.00 | 1 | BLUE | III | WHITE | III | X | | | 15.00 | |
| R1-1 | STOP | 30 x 30 | 6.25 | 5 | RED | VII | WHITE | VII | X | 31.25 | | | |
| R2(50)<CA> | SPEED LIMIT 50 | 36 X 48 | 12 | 1 | WHITE | III | BLACK | III | X | 12.00 | | | |
| R2-1(50) | SPEED LIMIT 50 | 36 X 48 | 12 | 1 | WHITE | III | BLACK | | X | 12.00 | | | |
| R2-1(55) | SPEED LIMIT 55 | 48 X 60 | 20 | 1 | WHITE | III | BLACK | | X | 20.00 | | | |
| R3(50)<CA> | END SPEED LIMIT 50 | 36 X 45 | 11.25 | 1 | WHITE | III | BLACK | | X | 11.25 | | | |
| R47<CA> | $1000 FINE FOR LITTERING | 52 X 36 | 13.00 | 1 | WHITE | III | BLACK | III | X | | 13.00 | | |
| R48-1<CA> | RADAR ENFORCED | 48 X 24 | 8.00 | 1 | WHITE | III | BLACK | III | X | 8.00 | | | |
| R61-11<CA> | Directional Arrow (Symbols) | 36 X 30 | 7.50 | 1 | WHITE | III | BLACK | III | X | 7.50 | | | |
| R73-3<CA> | Intersection Lane Control | 36 X 36 | 9.00 | 1 | WHITE | III | BLACK | III | X | 9.00 | | | |
| W1-2(Rt) | Turn/Curve (Symbol) | 36 X 36 | 9.00 | 1 | YELLOW | III | BLACK | | X | 9.00 | | | |
| W1-7 | Two-Directional Arrow (Symbol) | 48 X 24 | 8.00 | 1 | YELLOW | III | BLACK | | X | 8.00 | | | |
| W3-1 | Stop Ahead (Symbol) | 36 X 36 | 9.00 | 1 | YELLOW | VII | BLACK<br>RED,WHITE | VII | X | 9.00 | | | |
| W3-3 | Signal Ahead (Symbol) | 48 X 48 | 16.00 | 2 | YELLOW | VII | BLACK<br>RED,WHITE | VII | X | 32.00 | | | |
| W4-2R | Lane Ends (Symbol) | 48 X 48 | 16.00 | 4 | YELLOW | III | BLACK | | X | 64.00 | | | |
| M4-5 | TO | 21 X 12 | 1.75 | 1 | WHITE | III | BLUE | III | X | 1.75 | | | |
| M5-1 Rt | ADVANCE TURN ARROW AUXILIARY | 21 X 15 | 2.19 | 1 | BLUE | III | WHITE | III | X | 2.19 | | | |
| OM1-3 | Yellow Object Marker | 18 X 18 | 2.25 | 1 | YELLOW | III | | | X | 2.25 | | | |
| | | | | | | | | | TOTAL | 242.69 | 91.00 | 67.00 | 39.00 |

## OVERHEAD SIGN QUANTITIES

| SIGN NUMBER (No.) | FURNISH SIGN STRUCTURE (TRUSS) LB | INSTALL SIGN STRUCTURE (TRUSS) LB | 48" CIDH Conc Pile (SIGN FOUNDATION) LF | REMOVE SIGN STRUCTURE EA |
|---|---|---|---|---|
| 9A | 9617 | 9617 | 19.5 | |
| 9A (Exist) | 9617 | 9617 | 19.5 | 1 |
| TOTAL | | | | 1 |

L = LENGTH OF SIGN
D = DEPTH OF SIGN

NOTES

1. CALIFORNIA SIGN CODES ARE DESIGNATED BY <CA>. OTHERWISE, FEDERAL SIGN CODES ARE SHOWN.
2. DETAILED SIGN PANEL FABRICATION DRAWINGS SHOWING EXACT PANEL LAYOUTS WILL BE FURNISHED TO THE CONTRACTOR.

# SIGN QUANTITIES

SQ-3

REVISED BY | DATE REVISED
M. RAYYAN
CALCULATED-DESIGNED BY | CHECKED BY
FUNCTIONAL SUPERVISOR
ERIC Y. WONG

STATE OF CALIFORNIA - DEPARTMENT OF TRANSPORTATION
Caltrans
TRAFFIC DESIGN BRANCH SACRAMENTO

06:38 14-JUN-2010 trmikesl 13986uoc003.dgn

LAST REVISION 00-00-00 | DATE PLOTTED => 14-JUN-2010 | TIME PLOTTED => 06:38

| Dist | COUNTY | ROUTE | POST MILES TOTAL PROJECT | SHEET No. | TOTAL SHEETS |
|---|---|---|---|---|---|
| 01 | Lak | 53 | 2.8/7.5 | 164 | 217 |

Patrice A. Stafford 3-25-10
REGISTERED CIVIL ENGINEER DATE

6-1-10
PLANS APPROVAL DATE

REGISTERED PROFESSIONAL ENGINEER
PATRICE A. STAFFORD
No. 61256
Exp. 6-30-11
CIVIL
STATE OF CALIFORNIA

*THE STATE OF CALIFORNIA OR ITS OFFICERS OR AGENTS SHALL NOT BE RESPONSIBLE FOR THE ACCURACY OR COMPLETENESS OF SCANNED COPIES OF THIS PLAN SHEET.*

## DIGOUT LOCATIONS

| LOCATION NORTHBOUND PM | FROM STA | TO STA | LENGTH FT | WIDTH FT | DEPTH FT | REPLACE AC SURFACING CY | CRACK TREATMENT LNMI |
|---|---|---|---|---|---|---|---|
| 3.09 | 163+35.60 | 167+63.40 | 427.8 | 12 | 0.33 | 62.74 | 0.16 |
| 3.20 | 169+16.40 | 171+29.40 | 213.0 | 12 | 0.33 | 31.24 | 0.02 |
| 3.28 | 173+38.80 | 174+23.80 | 85.0 | 12 | 0.33 | 12.47 | 0.03 |
| 3.33 | 176+02.80 | 178+57.80 | 255.0 | 12 | 0.33 | 37.40 | 0.10 |
| 3.40 | 179+72.40 | 180+82.40 | 109.93 | 12 | 0.33 | 16.12 | 0.04 |
| 3.47 | 183+42.00 | 184+62.00 | 120.0 | 12 | 0.33 | 17.60 | 0.05 |
| 3.50 | 185+00.00 | 185+62.00 | 62.0 | 12 | 0.33 | 9.09 | 0.02 |
| 3.53 | 186+58.80 | 187+28.80 | 70.0 | 12 | 0.33 | 10.27 | 0.03 |
| 3.71 | 196+09.20 | 199+64.20 | 355.0 | 12 | 0.33 | 52.07 | 0.13 |
| 3.85 | 203+48.80 | 204+03.80 | 55.0 | 12 | 0.33 | 8.07 | 0.02 |
| 3.99 | 210+87.60 | 211+67.60 | 80.0 | 12 | 0.33 | 11.73 | 0.03 |
| 4.12 | 217+74.00 | 218+16.00 | 42.0 | 12 | 0.33 | 6.16 | 0.02 |
| 4.21 | 222+49.20 | 223+64.20 | 115.0 | 12 | 0.33 | 16.87 | 0.04 |
| 4.24 | 224+07.60 | 224+42.60 | 35.0 | 12 | 0.33 | 5.13 | 0.01 |
| 4.26 | 225+13.20 | 225+53.20 | 40.0 | 12 | 0.33 | 5.87 | 0.02 |
| 4.30 | 227+24.40 | 227+89.40 | 65.0 | 12 | 0.33 | 9.53 | 0.02 |
| 4.37 | 230+94.00 | 232+89.00 | 195.0 | 12 | 0.33 | 28.60 | 0.07 |
| 4.41 | 233+05.20 | 234+95.20 | 190.0 | 12 | 0.33 | 27.87 | 0.07 |
| 4.52 | 238+86.00 | 239+51.00 | 65.0 | 12 | 0.33 | 9.53 | 0.02 |
| 4.69 | 247+83.60 | 249+38.60 | 155.0 | 12 | 0.33 | 22.73 | 0.06 |
| 4.73 | 249+94.80 | 250+44.80 | 50.0 | 12 | 0.33 | 7.33 | 0.02 |
| 4.86 | 256+81.20 | 262+66.20 | 585.0 | 12 | 0.33 | 85.80 | 0.22 |
| 4.99 | 263+66.20 | 266+10.40 | 244.2 | 12 | 0.33 | 35.82 | 0.09 |
| 5.21 | 275+29.20 | 281+74.20 | 645.0 | 12 | 0.33 | 94.60 | 0.24 |
| 5.34 | 282+15.60 | 285+15.60 | 300.0 | 12 | 0.33 | 44.00 | 0.11 |
| 5.54 | 292+71.60 | 294+06.60 | 135.0 | 12 | 0.33 | 19.80 | 0.05 |
| 5.59 | 295+35.60 | 300+00.60 | 465.0 | 12 | 0.33 | 68.20 | 0.18 |
| 5.72 | 302+22.00 | 302+47.00 | 25.0 | 12 | 0.33 | 3.67 | 0.01 |
| 5.74 | 303+27.60 | 308+47.60 | 520.0 | 12 | 0.33 | 76.27 | 0.20 |
| 5.84 | 308+55.60 | 312+40.60 | 385.0 | 12 | 0.33 | 56.47 | 0.15 |
| 5.93 | 313+30.80 | 315+30.80 | 200.0 | 12 | 0.33 | 29.33 | 0.08 |
| 6.07 | 320+70.00 | 325+00.00 | 430.0 | 12 | 0.33 | 63.07 | 0.16 |
| 6.20 | 327+56.40 | 328+51.40 | 95.0 | 12 | 0.33 | 13.93 | 0.04 |
| 6.24 | 329+67.60 | 334+47.60 | 480.0 | 12 | 0.33 | 70.40 | 0.18 |
| 6.41 | 338+65.20 | 339+80.20 | 115.0 | 12 | 0.33 | 16.87 | 0.04 |
| 6.56 | 346+57.20 | 348+57.20 | 200.0 | 12 | 0.33 | 29.33 | 0.08 |
| 6.64 | 350+79.60 | 351+29.60 | 50.0 | 12 | 0.33 | 7.33 | 0.02 |
| 6.71 | 354+49.20 | 354+89.20 | 40.0 | 12 | 0.33 | 5.87 | 0.02 |
| 6.79 | 358+71.60 | 359+51.60 | 80.0 | 12 | 0.33 | 11.73 | 0.03 |
| 6.84 | 361+35.60 | 363+35.60 | 200.0 | 12 | 0.33 | 29.33 | 0.08 |
| NORTHBOUND | | | | SUBTOTAL | | 1170.24 | 2.96 |

## DIGOUT LOCATIONS

| LOCATION SOUTHBOUND PM | FROM STA | TO STA | LENGTH FT | WIDTH FT | DEPTH FT | REPLACE AC SURFACING CY | CRACK TREATMENT LNMI |
|---|---|---|---|---|---|---|---|
| 3.08 | 162+82.80 | 163+97.80 | 115.0 | 12 | 0.33 | 16.87 | 0.04 |
| 3.10 | 163+88.40 | 168+38.40 | 450.0 | 12 | 0.33 | 66.00 | 0.17 |
| 3.32 | 170+22.00 | 171+97.00 | 175.0 | 12 | 0.33 | 25.67 | 0.07 |
| 3.31 | 174+97.20 | 175+67.20 | 70.0 | 12 | 0.33 | 10.27 | 0.03 |
| 3.35 | 177+08.40 | 178+48.40 | 140.0 | 12 | 0.33 | 20.53 | 0.05 |
| 3.43 | 181+30.80 | 190+35.80 | 905.0 | 12 | 0.33 | 132.73 | 0.34 |
| 3.62 | 191+34.00 | 192+09.00 | 75.0 | 12 | 0.33 | 11.00 | 0.03 |
| 3.67 | 193+98.00 | 194+38.00 | 40.0 | 12 | 0.33 | 5.87 | 0.02 |
| 3.70 | 195+56.40 | 197+16.40 | 160.0 | 12 | 0.33 | 23.47 | 0.06 |
| 3.74 | 197+67.60 | 200+07.60 | 240.0 | 12 | 0.33 | 35.20 | 0.09 |
| 3.80 | 200+84.40 | 201+89.40 | 105.0 | 12 | 0.33 | 15.40 | 0.04 |
| 3.86 | 204+01.20 | 206+96.20 | 295.0 | 12 | 0.33 | 43.27 | 0.11 |
| 3.92 | 207+18.00 | 209+98.00 | 280.0 | 12 | 0.33 | 41.07 | 0.02 |
| 4.17 | 220+38.00 | 225+73.00 | 535.0 | 12 | 0.33 | 78.47 | 0.11 |
| 4.30 | 227+24.40 | 227+94.40 | 70.0 | 12 | 0.33 | 10.27 | 0.03 |
| 4.32 | 228+30.00 | 232+55.00 | 425.0 | 12 | 0.33 | 62.33 | 0.16 |
| 4.44 | 234+63.60 | 239+53.60 | 490.0 | 12 | 0.33 | 71.87 | 0.19 |
| 4.60 | 243+08.40 | 243+58.40 | 50.0 | 12 | 0.33 | 7.33 | 0.02 |
| 4.64 | 245+19.60 | 246+79.60 | 160.0 | 12 | 0.33 | 23.47 | 0.06 |
| 4.68 | 247+30.80 | 248+90.80 | 160.0 | 12 | 0.33 | 23.47 | 0.06 |
| 4.87 | 257+34.00 | 258+84.00 | 150.0 | 12 | 0.33 | 22.00 | 0.06 |
| 5.05 | 266+84.40 | 274+99.40 | 815.0 | 12 | 0.33 | 119.53 | 0.31 |
| 5.22 | 275+82.00 | 276+82.00 | 100.0 | 12 | 0.33 | 14.67 | 0.04 |
| 5.27 | 278+46.00 | 279+86.00 | 140.0 | 12 | 0.33 | 20.53 | 0.05 |
| 5.32 | 281+10.00 | 284+05.00 | 295.0 | 12 | 0.33 | 43.27 | 0.11 |
| 5.40 | 285+32.40 | 285+67.40 | 35.0 | 12 | 0.33 | 5.13 | 0.01 |
| 5.50 | 290+60.40 | 291+85.40 | 125.0 | 12 | 0.33 | 18.33 | 0.05 |
| 5.55 | 293+24.40 | 316+19.40 | 2295.0 | 12 | 0.33 | 336.60 | 0.50 |
| 6.01 | 317+53.20 | 319+73.20 | 220.0 | 12 | 0.33 | 32.27 | 0.37 |
| 6.08 | 321+22.80 | 333+32.80 | 1210.0 | 12 | 0.33 | 177.47 | 0.08 |
| 6.35 | 335+48.40 | 337+68.40 | 220.0 | 12 | 0.33 | 32.27 | 0.46 |
| 6.49 | 342+87.60 | 348+47.60 | 560.0 | 12 | 0.33 | 82.13 | 0.08 |
| 6.62 | 349+74.00 | 357+80.20 | 806.2 | 12 | 0.33 | 118.24 | 0.31 |
| 6.66 | 351+74.20 | 351+80.20 | | | | | 0.04 |
| 6.79 | 358+71.60 | 359+21.60 | 50.0 | 12 | 0.33 | 7.33 | 0.04 |
| 6.84 | 363+35.60 | 364+35.60 | 100.0 | 12 | 0.33 | 14.67 | 0.02 |
| SOUTHBOUND | | | | SUBTOTAL | | 1769.00 | 4.23 |
| NORTHBOUND | | | | SUBTOTAL | | 1170.24 | 2.96 |
| | | | | TOTAL | | 2939.24 | 7.19 |

## TEMPORARY FENCE (TYPE ESA)

| STATION LIMITS FROM STA | TO STA | L+/R+ | LENGTH FT |
|---|---|---|---|
| 192+75.00 | 194+75.00 | R+ | 175 |
| 194+10.00 | 195+40.00 | L+ | 130 |
| 194+80.00 | 204+00.00 | R+ | 920 |
| 205+10.00 | ELDERBERRY | L+ | 180 |
| 206+00.00 | 210+00.00 | L+ | 400 |
| 267+90.00 | ELDERBERRY | R+ | 180 |
| 269+70.00 | ELDERBERRY | R+ | 220 |
| | | | |
| | TOTAL | | 2205 |

## RECONSTRUCT MAILBOX

| LOCATION | RECONSTRUCT MAILBOX EA |
|---|---|
| 234+70 R+ | 1 |

## TEMPORARY EROSION CONTROL (BMPs)

| STATION LIMITS | TEMPORARY FIBER ROLL LF | TEMPORARY SILT FENCE LF | TEMPORARY CHECK DAM LF | TEMPORARY GRAVEL BAG BERM LF | TEMPORARY DRAINAGE INLET PROTECTION EA | TEMPORARY CONSTRUCTION ENTRANCE EA | MOVE-IN/MOVE-OUT (Temp EROSION CONTROL) EA | TEMPORARY TACKED STRAW SQYD | TEMPORARY COVER SQYD |
|---|---|---|---|---|---|---|---|---|---|
| | | | | | | | | | |
| TOTAL | 6,620 | 28,680 | 1725 | 4070 | 49 | 13 | 6 | 17,160 | 4,000 |

# SUMMARY OF QUANTITIES

Q-1

REVISED BY | DATE REVISED
P. STAFFORD | C. OLSON
CALCULATED-DESIGNED BY | CHECKED BY
FUNCTIONAL SUPERVISOR
C. OLSON

STATE OF CALIFORNIA - DEPARTMENT OF TRANSPORTATION
Caltrans
NORTH REGION
OFFICE OF DESIGN, SOUTH
DESIGN BRANCH S10

06:39 14-JUN-2010 trmikesl 13986upa001.dgn

LAST REVISION | DATE PLOTTED => 14-JUN-2010
TIME PLOTTED => 06:39

| Dist | COUNTY | ROUTE | POST MILES TOTAL PROJECT | SHEET No. | TOTAL SHEETS |
|---|---|---|---|---|---|
| 01 | Lak | 53 | 2.8/7.5 | 165 | 217 |

Patrice A. Stafford 3-25-10
REGISTERED CIVIL ENGINEER DATE

6-1-10
PLANS APPROVAL DATE

REGISTERED PROFESSIONAL ENGINEER
PATRICE A. STAFFORD
No. 61256
Exp. 6-30-11
CIVIL
STATE OF CALIFORNIA

THE STATE OF CALIFORNIA OR ITS OFFICERS OR AGENTS SHALL NOT BE RESPONSIBLE FOR THE ACCURACY OR COMPLETENESS OF SCANNED COPIES OF THIS PLAN SHEET.

# ROADWAY QUANTITIES

| STATION LIMITS | COLD PLANE ASPHALT CONCRETE PAVEMENT | RUBBERIZED HOT MIX ASPHALT (OPEN GRADED) | HOT MIX ASPHALT | TACK COAT | ROADWAY EXCAVATION | (N) EMBANKMENT | CLASS 2 AGGREGATE BASE | METAL BEAM GUARD RAILING | ALTERNATIVE FLARED TERMINAL SYSTEM | ALTERNATIVE IN-LINE TERMINAL SYSTEM | VEGETATION CONTROL (MINOR CONCRETE) | RUBBERIZED HOT MIX ASPHALT (GAP GRADED) | REMOVE METAL BEAM GUARD RAIL | ROCK SLOPE PROTECTION (1/4 TON, METHOD B) | PRECAST CONCRETE BOX CULVERT (10' X 10') | BAR REINFORCING STEEL | DITCH EXCAVATION | REMOVE HEADWALL | REMOVE WINGWALL | CHAIN LINK FENCE (TYPE CL-6) | REMOVE CHAIN LINK FENCE | STRUCTURE CONCRETE, BOX CULVERT |
|---|---|---|---|---|---|---|---|---|---|---|---|---|---|---|---|---|---|---|---|---|---|---|
| | SQYD | TON | TON | TON | CY | CY | CY | LF | EA | EA | SQYD | TON | LF | CY | LF | LB | CY | EA | EA | LF | LF | CY |
| "JJ1" 152+00 TO "JJ1" 153+00 | 1,028 | | 8 | | | | 69 | | | | | | | | | | | | | | | |
| "JJ1" 153+00 TO "JJ1" 168+00 | 13,300 | 1213 | | 3.92 | | | | | | | | | | | | | | | | | | |
| "JJ1" 168+00 TO " JJ1" 193+00 | 10,102 | 1259 | 2886 | 3.03 | 7,264 | 7,100 | 4,483 | | | | | 943 | | | | | | | | | | |
| "JJ1" 193+00 TO " JJ1" 196+00 | 1,665 | 217 | 672 | 0.37 | 2,007 | 924 | 1,486 | | | | | 290 | | | | | | | | | | |
| "JJ1" 196+00 TO " JJ1" 210+00 | 5,457 | 904 | 2187 | 0.64 | 20,230 | 3,202 | 3,698 | | | | | 813 | | | | | | | | | | |
| "JJ1" 210+00 TO " JJ1" 214+00 | 2,559 | 368 | 919 | 0.49 | 943 | 7,805 | 1,057 | | | | | 216 | | | | | | | | | | |
| "JJ1" 214+00 TO " JJ1" 260+00 | 17,125 | 2173 | 4867 | 5.59 | 13,533 | 21,833 | 7,187 | | | | | 1525 | | | | | | | | | | |
| "JJ1" 260+00 TO " JJ1" 266+00 | 2,630 | 442 | 1084 | 0.73 | 1,782 | 1,379 | 2,425 | | | | | 472 | | | | | | | | | | |
| "JJ1" 266+00 TO " JJ1" 270+00 | 1,442 | 286 | 663 | 0.49 | 5,722 | 726 | 1,291 | | | | | 272 | | | | | | | | | | |
| "JJ1" 270+00 TO " JJ1" 272+50 | 1,314 | 169 | 484 | 0.31 | 4,960 | 173 | 1,008 | | | | | 231 | | | | | | | | | | |
| "JJ1" 272+50 TO " JJ1" 277+50 | 2,047 | 323 | 763 | 0.61 | 4,673 | 888 | 1,413 | | | | | 297 | | | | | | | | | | |
| "JJ1" 277+50 TO " JJ1" 287+00 | 3,416 | 495 | 1152 | 1.16 | 1,920 | 1,393 | 1,835 | | | | | 391 | | | | | | | | | | |
| "JJ1" 287+00 TO " JJ1" 317+70 | 11,106 | 1253 | 2911 | 3.75 | 8,346 | 6,329 | 3,532 | | | | | 766 | | | | | | | | | | |
| "JJ1" 317+70 TO " JJ1" 318+20 | 179 | 20 | 68 | 0.06 | 63 | 287 | 57 | | | | | 12 | | | | | | | | | | |
| "JJ1" 318+20 TO " JJ1" 362+00 | 16,222 | 1772 | 4303 | 5.35 | 21,176 | 10,904 | 5,504 | | | | | 1160 | | | | | | | | | | |
| "JJ1" 362+00 TO " JJ1" 365+50 | 1,281 | 152 | 342 | 1.16 | 2,755 | 36 | 394 | | | | | 95 | | | | | | | | | | |
| "JJ1" 365+50 TO " JJ1" 386+00 | 7,754 | 864 | 2319 | 2.51 | 10,848 | 5,158 | 2,490 | | | | | 538 | | | | | | | | | | |
| "JJ1" 383+20 TO " JJ1" 394+20 | 222 | | 2 | | | | 15 | | | | | | | | | | | | | | | |
| "JJ1" 386+00 TO " JJ1" 393+80 | 4,387 | 398 | 168 | 0.67 | 457 | 240 | 359 | | | | | 79 | | | | | | | | | | |
| "JJ1" 393+80 TO " JJ1" 395+00 | 420 | | 3 | | | | 28 | | | | | | | | | | | | | | | |
| "JKL" 407+60 TO " JKL" 420+30 | 3,052 | 278 | | 0.78 | | | | | | | | | | | | | | | | | | |
| "JKINT3" OLYMPIC Dr | 1,536 | 118 | 377 | | 240 | 238 | 320 | 570 | 1 | 1 | 190 | | 660 | 2130 | | | | | | | | |
| 300+53 "CATTLE CROSSING" | | | | | | | | 130 | 4 | | 93 | | | | 24 | 5607 | 19.3 | 2 | 4 | 247 | 297 | 72.5 |
| 334+77 "CATTLE CROSSING" | | | | | | | | | | | | | 250 | | 62 | 7146 | 17.3 | 2 | 4 | 360 | 425 | 91.3 |
| "JJ1" 276+74 (CMS) | | | | | | | | 52 | 2 | | 44 | | | | | | | | | | | |
| FROM DRAINAGE QUANTITIES | | | | | | | | | | | | | | | | 26,975 | 210.0 | 4 | 2 | | | 102.3 |
| DRIVEWAY CONFORMS | 2516 | | 21 | | | | 419 | | | | | | | | | | | | | | | |
| FROM DIKE TABLE | | | | | | | | | | | | | | | | | | | | | | |
| FROM HMA OVERSIDE DRAIN ITEMS | | | 17.2 | | | | | | | | | | | | | | | | | | | |
| FROM DITCH ITEMS | | | | | | | | | | | | | | 31 | | | 99.3 | | | | | |
| TOTAL | 110,760 | 12,704 | 26,873 | 31.62 | 106,919 | 68,615 | 39,070 | 752 | 7 | 1 | 327 | 8100 | 910 | 2161 | 86 | 39,728 | 345.9 | 8 | 10 | 607 | 722 | 273.1 |

## SUMMARY OF QUANTITIES

Q-2

REVISED BY | DATE REVISED
P. STAFFORD | C. OLSON
CALCULATED-DESIGNED BY | CHECKED BY
FUNCTIONAL SUPERVISOR
C. OLSON

STATE OF CALIFORNIA - DEPARTMENT OF TRANSPORTATION
Caltrans
NORTH REGION
OFFICE OF DESIGN, SOUTH
DESIGN BRANCH S10

06:39 14-JUN-2010 trmikesl 13986upa002.dgn

LAST REVISION 03-25-10 | DATE PLOTTED => 14-JUN-2010 | TIME PLOTTED => 06:39

| Dist | COUNTY | ROUTE | POST MILES TOTAL PROJECT | SHEET No. | TOTAL SHEETS |
|---|---|---|---|---|---|
| 01 | Lak | 53 | 2.8/7.5 | 166 | 217 |

Patrice A. Stafford 3-25-10
REGISTERED CIVIL ENGINEER DATE

6-1-10
PLANS APPROVAL DATE

REGISTERED PROFESSIONAL ENGINEER
PATRICE A. STAFFORD
No. 61256
Exp. 6-30-11
CIVIL
STATE OF CALIFORNIA

*THE STATE OF CALIFORNIA OR ITS OFFICERS OR AGENTS SHALL NOT BE RESPONSIBLE FOR THE ACCURACY OR COMPLETENESS OF SCANNED COPIES OF THIS PLAN SHEET.*

# HMA DIKE

| LOCATION NORTHBOUND | | | PLACE HMA DIKE | | | HMA |
|---|---|---|---|---|---|---|
| Line | FROM STA | TO STA | TYPE A LF | TYPE E LF | TYPE F LF | TON |
| "JJ1" | 179+50 | 183+50 | 400 | | | 10.8 |
| "JJ1" | 196+50 | 205+40 | 890 | | | 24.0 |
| "JJ1" | 205+50 | 211+00 | | 550 | | 14.3 |
| "JJ1" | 211+10 | JKINT3 5+00 | | | 420 | 5.5 |
| JKINT3 | 7+80 | "JJ1" 213+40 | | | 200 | 2.6 |
| "JJ1" | 213+50 | 222+60 | | 910 | | 23.7 |
| "JJ1" | 234+50 | 238+80 | 430 | | | 11.6 |
| "JJ1" | 238+90 | 245+00 | | 610 | | 15.9 |
| "JJ1" | 249+80 | 257+30 | 750 | | | 20.3 |
| "JJ1" | 257+40 | 262+00 | | 460 | | 12.0 |
| "JJ1" | 265+90 | 266+90 | | 100 | | 2.6 |
| "JJ1" | 267+00 | 280+00 | 1300 | | | 35.1 |
| "JJ1" | 302+90 | 306+30 | | 340 | | 8.8 |
| "JJ1" | 308+90 | 312+00 | 310 | | | 8.4 |
| "JJ1" | 315+18 | 317+20 | 202 | | | 5.5 |
| "JJ1" | 319+00 | 319+60 | | 60 | | 1.6 |
| "JJ1" | 319+70 | 325+50 | 580 | | | 15.7 |
| "JJ1" | 325+60 | 327+70 | | 210 | | 5.5 |
| "JJ1" | 327+80 | 329+60 | 180 | | | 4.9 |
| "JJ1" | 336+20 | 343+00 | 680 | | | 18.4 |
| "JJ1" | 347+90 | 368+50 | 2060 | | | 55.6 |
| "JJ1" | 374+00 | 383+00 | 900 | | | 24.3 |
| NORTHBOUND - SUBTOTAL | | | 8682 | 3240 | 620 | 326.8 |

| LOCATION SOUTHBOUND | | | PLACE HMA DIKE | | | HMA |
|---|---|---|---|---|---|---|
| Line | FROM STA | TO STA | TYPE A LF | TYPE E LF | TYPE F LF | TON |
| "JJ1" | 179+00 | 188+40 | 940 | | | |
| "JJ1" | 197+00 | 208+50 | 1150 | | | |
| "JJ1" | 208+60 | 210+50 | | 190 | | |
| "JJ1" | 221+80 | 227+70 | 590 | | | |
| "JJ1" | 235+00 | 236+00 | 100 | | | |
| "JJ1" | 250+50 | 257+80 | 730 | | | |
| "JJ1" | 258+20 | 258+80 | 60 | | | |
| "JJ1" | 258+90 | 260+60 | | 170 | | |
| "JJ1" | 268+40 | 271+80 | | 340 | | |
| "JJ1" | 272+10 | 274+90 | | 280 | | |
| "JJ1" | 275+00 | 277+50 | | | 250 | |
| "JJ1" | 287+50 | 298+90 | 1140 | | | |
| "JJ1" | 299+00 | 300+22 | | 122 | | |
| "JJ1" | 300+22 | 300+85 | | 63 | | |
| "JJ1" | 300+85 | 301+40 | 55 | | | |
| "JJ1" | 301+50 | 312+00 | 1050 | | | |
| "JJ1" | 315+18 | 316+90 | 172 | | | |
| "JJ1" | 317+00 | 319+90 | | 290 | | |
| "JJ1" | 320+00 | 326+00 | 600 | | | |
| "JJ1" | 326+00 | 330+20 | | 420 | | |
| "JJ1" | 336+20 | 342+50 | 630 | | | |
| "JJ1" | 342+60 | 347+70 | | 510 | | |
| "JJ1" | 348+00 | 354+00 | 600 | | | |
| "JJ1" | 363+26 | 368+00 | 474 | | | |
| "JJ1" | 374+00 | 382+40 | 840 | | | |
| "JJ1" | 387+70 | 394+60 | | 690 | | |
| SOUTHBOUND - SUBTOTAL | | | 9131 | 3075 | 250 | 329.8 |
| GRAND TOTAL | | | 17813 | 6315 | 870 | 656.6* |

* FOR ITEM TOTAL, SEE ROADWAY QUANTITIES TABLE

## SUMMARY OF QUANTITIES

Q-3

REVISED BY | DATE REVISED
P. STAFFORD | C. OLSON
CALCULATED-DESIGNED BY | CHECKED BY
FUNCTIONAL SUPERVISOR
C. OLSON

STATE OF CALIFORNIA - DEPARTMENT OF TRANSPORTATION
Caltrans
NORTH REGION
OFFICE OF DESIGN, SOUTH
DESIGN BRANCH S10

06:39 14-JUN-2010 trmikesl 13986upa003.dgn

LAST REVISION | DATE PLOTTED => 14-JUN-2010 | TIME PLOTTED => 06:39

| Dist | COUNTY | ROUTE | POST MILES TOTAL PROJECT | SHEET No. | TOTAL SHEETS |
|---|---|---|---|---|---|
| 01 | Lak | 53 | 2.8/7.5 | 167 | 217 |

REGISTERED ELECTRICAL ENGINEER 3-25-10 DATE

6-1-10
PLANS APPROVAL DATE

REGISTERED PROFESSIONAL ENGINEER MARY ANN HUDSPETH No. 17245 Exp. 06-30-10 ELECTRICAL STATE OF CALIFORNIA

*THE STATE OF CALIFORNIA OR ITS OFFICERS OR AGENTS SHALL NOT BE RESPONSIBLE FOR THE ACCURACY OR COMPLETENESS OF ELECTRONIC COPIES OF THIS PLAN SHEET.*

## NOTE:

· FOR ACCURATE RIGHT OF WAY AND ACCESS DATA, CONTACT RIGHT OF WAY ENGINEERING AT THE DISTRICT OFFICE.

## PROJECT NOTES (THIS SHEET ONLY)

1 AB EXISTING LOOP CONDUCTORS, AND RC DETECTOR HANDHOLE. AB EXISTING CONDUIT BETWEEN DETECTOR HANDHOLE AND PULL BOX.




## TYPICAL LOOP DETAIL

NO SCALE

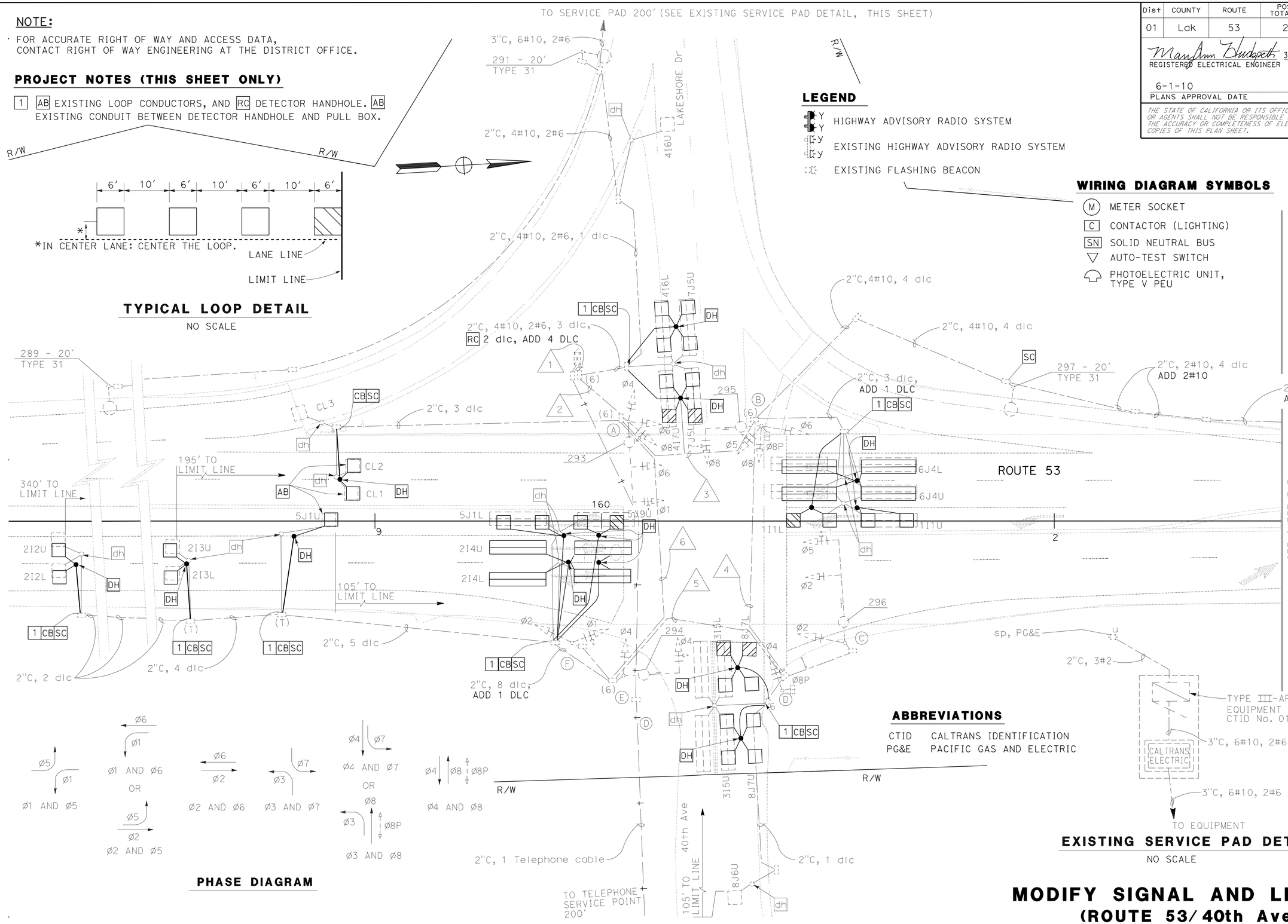


## LEGEND

- HIGHWAY ADVISORY RADIO SYSTEM
- EXISTING HIGHWAY ADVISORY RADIO SYSTEM
- EXISTING FLASHING BEACON

## WIRING DIAGRAM SYMBOLS

- (M) METER SOCKET
- [C] CONTACTOR (LIGHTING)
- [SN] SOLID NEUTRAL BUS
- ▽ AUTO-TEST SWITCH
- PHOTOELECTRIC UNIT, TYPE V PEU

## ABBREVIATIONS

| | |
|---|---|
| CTID | CALTRANS IDENTIFICATION |
| PG&E | PACIFIC GAS AND ELECTRIC |

## PHASE DIAGRAM

Ø5 Ø1 — Ø1 AND Ø5
Ø6 Ø1 — Ø1 AND Ø6 OR Ø5 Ø2 — Ø2 AND Ø5
Ø6 Ø2 — Ø2 AND Ø6
Ø7 Ø3 — Ø3 AND Ø7
Ø4 Ø7 — Ø4 AND Ø7 OR Ø8 Ø3 Ø8P — Ø3 AND Ø8
Ø4 Ø8 Ø8P — Ø4 AND Ø8

## EXISTING SERVICE PAD DETAIL

NO SCALE

# MODIFY SIGNAL AND LIGHTING
## (ROUTE 53/40th Ave)

SCALE: 1" = 20'

THIS PLAN IS ACCURATE FOR ELECTRICAL WORK ONLY.

**E-1**

| REVISED BY | DATE REVISED |
|---|---|
| | |

CALCULATED-DESIGNED BY: ZAHRA NIKNAFS
CHECKED BY: MARY ANN HUDSPETH
FUNCTIONAL SUPERVISOR: STEVEN BLOCK

STATE OF CALIFORNIA - DEPARTMENT OF TRANSPORTATION
Caltrans OFFICE OF ELECTRICAL DESIGN MARYSVILLE

LAST REVISION 04-26-10
DATE PLOTTED => 14-JUN-2010
TIME PLOTTED => 06:39

13986uua001.dgn

| Dist | COUNTY | ROUTE | POST MILES TOTAL PROJECT | SHEET No. | TOTAL SHEETS |
|---|---|---|---|---|---|
| 01 | Lak | 53 | 2.8/7.5 | 168 | 217 |

REGISTERED ELECTRICAL ENGINEER 3-25-10 DATE

6-1-10
PLANS APPROVAL DATE

REGISTERED PROFESSIONAL ENGINEER
MARY ANN HUDSPETH
No. 17245
Exp. 06-30-10
ELECTRICAL
STATE OF CALIFORNIA

*THE STATE OF CALIFORNIA OR ITS OFFICERS OR AGENTS SHALL NOT BE RESPONSIBLE FOR THE ACCURACY OR COMPLETENESS OF ELECTRONIC COPIES OF THIS PLAN SHEET.*

## MODIFIED CONDUCTOR AND CONDUIT SCHEDULE

| CABLE SCHEDULE | | | CONDUIT RUN NUMBER AND SIZE | | | | | |
|---|---|---|---|---|---|---|---|---|
| CABLE TYPE | Std | PHASE | 1 | 2 | 3 | 4 | 5 | 6 |
| 12CSC | Ⓐ | 1, 3, 4, 6, 8 | 3 | 3 | | | | |
| | Ⓑ | 3, 5, 6, 8, 8PPB | 2 1 | 2 1 | 2 1 | | | |
| | Ⓒ | 2, 5 | 1 | 1 | | | 1 | 1 |
| | Ⓓ | 4, 7, 8P, 8PPB | 1 1 | 1 1 | | | 1 1 | 1 1 |
| | Ⓔ | 4, 7 | 1 | 1 | | | | 1 |
| 3CSC | Ⓕ | 1, 2 | 1 | 1 | | | | 1 |
| | TOTAL CABLES | | 9 2 | 9 2 | 2 1 | | 2 1 | 4 1 |
| | | | | | | | | |
| AWG 6 | | POWER (CABINET) | 2 | | | | | |
| AWG 10 | | LUMINAIRES | | 2 | 2 | | 2 | 2 |
| AWG 10 | | FLASHING BEACON | | 2 | 2 | | | |
| | | | | | | | | |
| TYPE B DLC | | DETECTOR | | | | | | |
| | ø1 | | 1* | 1* | 1* | | | |
| | ø2 | | 6 | 6 | | | | 6 |
| | ø3 | | 1* | 1* | | | 1* | 1* |
| | ø4 | | 2* | | | | | |
| | ø5 | | 2* | 2* | | | | 2* |
| | ø6 | | 6 | 6 | 6 | | | |
| | ø7 | | 1* | | | | | |
| | ø8 | | 2* | 2* | | | 2* | 2* |
| | | | | | | | | |
| TOTAL DLC (REVISED) | | | 27 | 22 | 8 | | 5 | 14 |
| CONDUIT SIZE | | | 2-4" | 2-4" | 3" | 3" | 3" | 4" |

* - ADD 1 DLC.

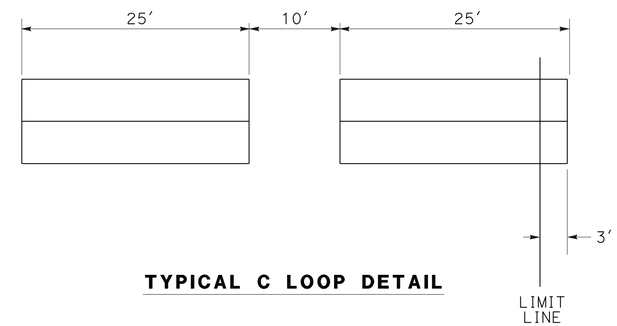


**TYPICAL C LOOP DETAIL**

# MODIFY SIGNAL AND LIGHTING
## (ROUTE 53/40th Ave)

NO SCALE

**E-2**

THIS PLAN IS ACCURATE FOR ELECTRICAL WORK ONLY.

STATE OF CALIFORNIA - DEPARTMENT OF TRANSPORTATION
Caltrans® OFFICE OF ELECTRICAL DESIGN MARYSVILLE

FUNCTIONAL SUPERVISOR: STEVEN BLOCK
CALCULATED-DESIGNED BY: ZAHRA NIKNAFS
CHECKED BY: MARY ANN HUDSPETH
REVISED BY
DATE REVISED

13986uua002.dgn

LAST REVISION 05-06-10 | DATE PLOTTED => 14-JUN-2010 | TIME PLOTTED => 06:39

| Dist | COUNTY | ROUTE | POST MILES TOTAL PROJECT | SHEET No. | TOTAL SHEETS |
|---|---|---|---|---|---|
| 01 | Lak | 53 | 2.8/7.5 | 169 | 217 |

REGISTERED ELECTRICAL ENGINEER 3-25-10 DATE

6-1-10
PLANS APPROVAL DATE

REGISTERED PROFESSIONAL ENGINEER MARY ANN HUDSPETH No. 17245 Exp. 06-30-10 ELECTRICAL STATE OF CALIFORNIA

*THE STATE OF CALIFORNIA OR ITS OFFICERS OR AGENTS SHALL NOT BE RESPONSIBLE FOR THE ACCURACY OR COMPLETENESS OF ELECTRONIC COPIES OF THIS PLAN SHEET.*

NOTE:

FOR ACCURATE RIGHT OF WAY AND ACCESS DATA,
CONTACT RIGHT OF WAY ENGINEERING AT THE DISTRICT OFFICE.

**PROJECT NOTES (THIS SHEET ONLY):**

1 AB EXISTING LOOP CONDUCTORS, AND RC DETECTOR HANDHOLE. AB EXISTING CONDUIT BETWEEN DETECTOR HANDHOLE AND PULL BOX.

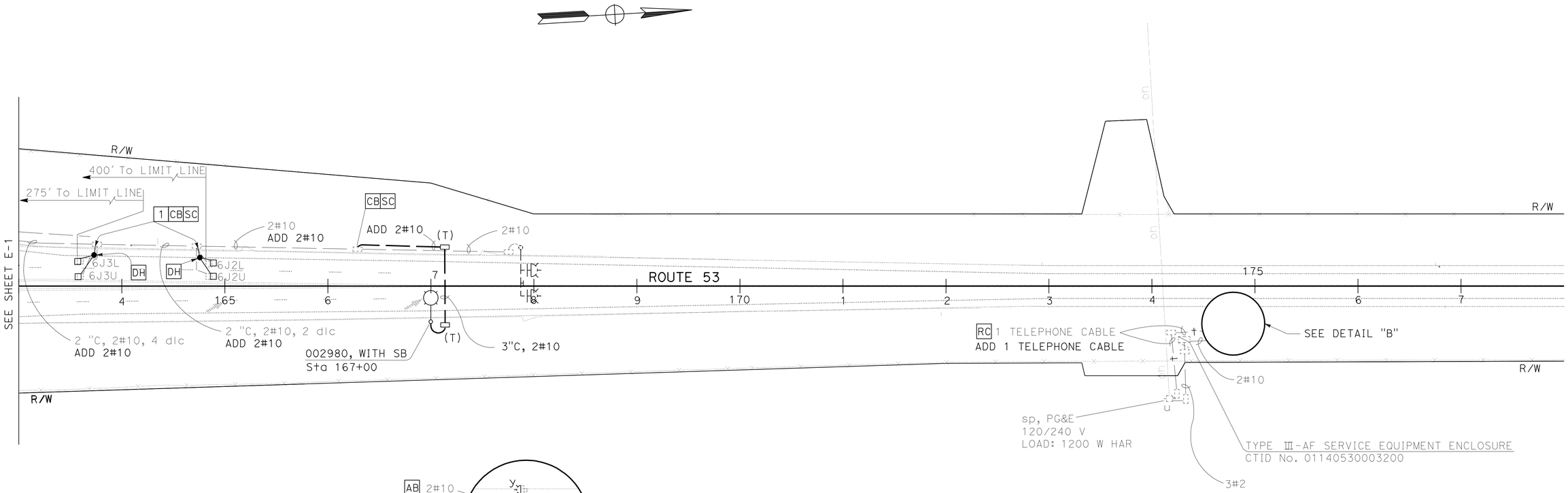


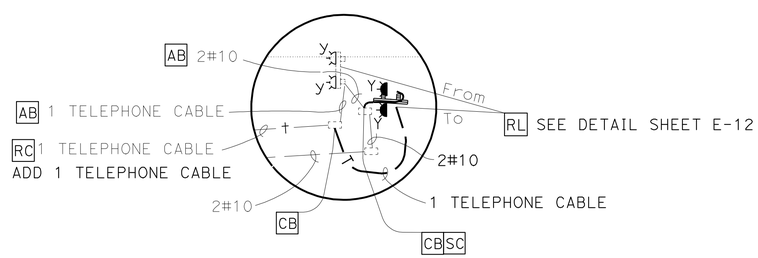


**DETAIL "B"**

# RELOCATE HIGHWAY ADVISORY RADIO SYSTEM
# MODIFY SIGNAL AND LIGHTING
## (ROUTE 53/40th Ave)

SCALE: 1" = 50'

THIS PLAN IS ACCURATE FOR ELECTRICAL WORK ONLY.

**E-3**

| REVISED BY | DATE REVISED |
|---|---|
| | |

CALCULATED-DESIGNED BY: ZAHRA NIKNAFS
CHECKED BY: MARY ANN HUDSPETH
FUNCTIONAL SUPERVISOR: STEVEN BLOCK

STATE OF CALIFORNIA - DEPARTMENT OF TRANSPORTATION
Caltrans OFFICE OF ELECTRICAL DESIGN MARYSVILLE

13986uua003.dgn

LAST REVISION 04-26-10 | DATE PLOTTED => 14-JUN-2010 | TIME PLOTTED => 06:39

| Dist | COUNTY | ROUTE | POST MILES TOTAL PROJECT | SHEET No. | TOTAL SHEETS |
|---|---|---|---|---|---|
| 01 | Lak | 53 | 2.8/7.5 | 170 | 217 |

REGISTERED ELECTRICAL ENGINEER 3-25-10 DATE

6-1-10
PLANS APPROVAL DATE

REGISTERED PROFESSIONAL ENGINEER
MARY ANN HUDSPETH
No. 17245
Exp. 06-30-10
ELECTRICAL
STATE OF CALIFORNIA

*THE STATE OF CALIFORNIA OR ITS OFFICERS OR AGENTS SHALL NOT BE RESPONSIBLE FOR THE ACCURACY OR COMPLETENESS OF ELECTRONIC COPIES OF THIS PLAN SHEET.*

**NOTE:**

FOR ACCURATE RIGHT OF WAY AND ACCESS DATA,
CONTACT RIGHT OF WAY ENGINEERING AT THE DISTRICT OFFICE.

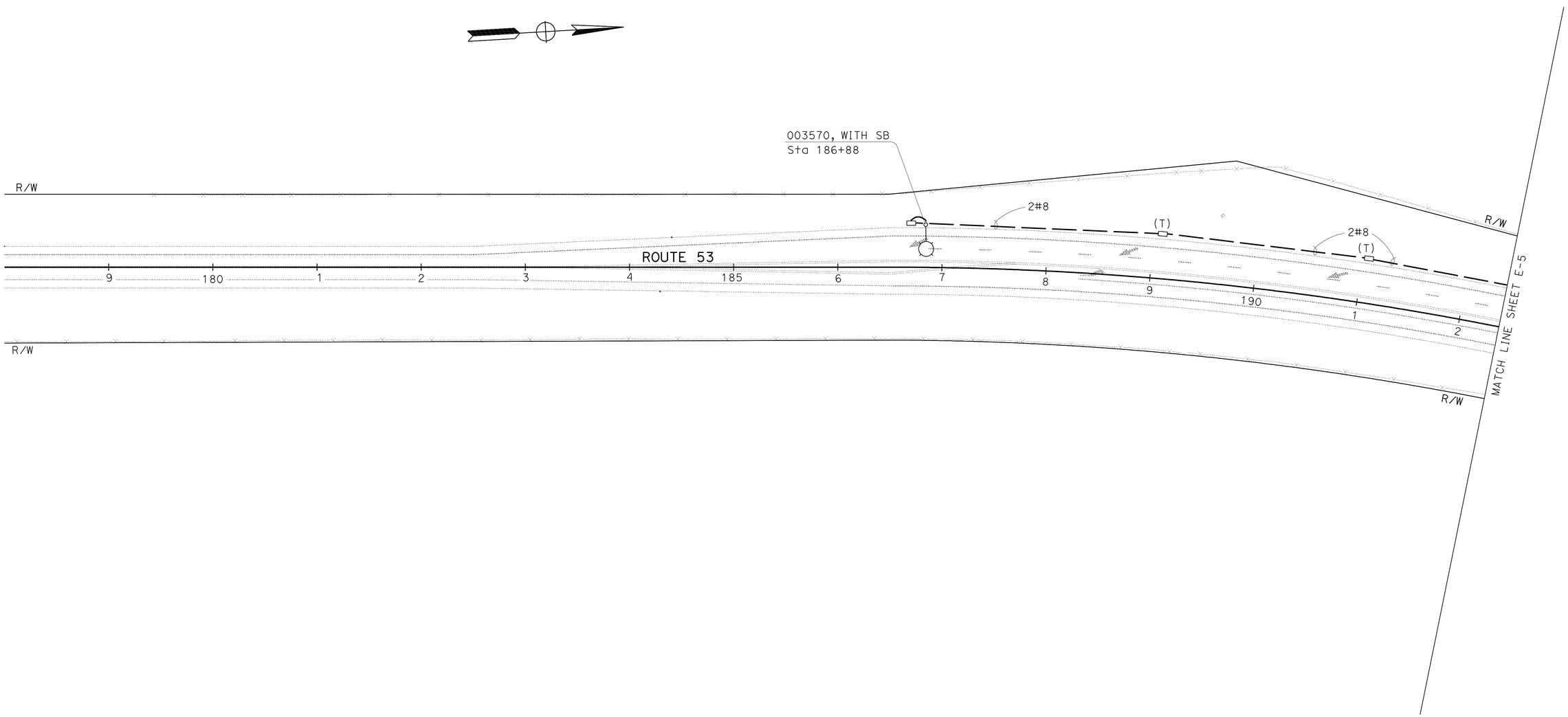


THIS PLAN IS ACCURATE FOR ELECTRICAL WORK ONLY.

# HIGHWAY LIGHTING

SCALE: 1" = 50'

**E-4**

| REVISED BY | DATE REVISED |
|---|---|
| | |

CALCULATED-DESIGNED BY: ZAHRA NIKNAFS
CHECKED BY: MARY ANN HUDSPETH
FUNCTIONAL SUPERVISOR: STEVEN BLOCK

STATE OF CALIFORNIA - DEPARTMENT OF TRANSPORTATION
Caltrans® OFFICE OF ELECTRICAL DESIGN MARYSVILLE

13986uua004.dgn

LAST REVISION 04-26-10 | DATE PLOTTED => 14-JUN-2010 | TIME PLOTTED => 06:39

| Dist | COUNTY | ROUTE | POST MILES TOTAL PROJECT | SHEET No. | TOTAL SHEETS |
|---|---|---|---|---|---|
| 01 | Lak | 53 | 2.8/7.5 | 171 | 217 |

REGISTERED ELECTRICAL ENGINEER 3-25-10 DATE

6-1-10
PLANS APPROVAL DATE

REGISTERED PROFESSIONAL ENGINEER
MARY ANN HUDSPETH
No. 17245
Exp. 06-30-10
ELECTRICAL
STATE OF CALIFORNIA

*THE STATE OF CALIFORNIA OR ITS OFFICERS OR AGENTS SHALL NOT BE RESPONSIBLE FOR THE ACCURACY OR COMPLETENESS OF ELECTRONIC COPIES OF THIS PLAN SHEET.*

NOTE:

FOR ACCURATE RIGHT OF WAY AND ACCESS DATA, CONTACT RIGHT OF WAY ENGINEERING AT THE DISTRICT OFFICE.

**PROJECT NOTES (THIS SHEET ONLY)**

1 RS EXISTING SOLAR FLASHING BEACON, POLE AND SOLAR EQUIPMENT.

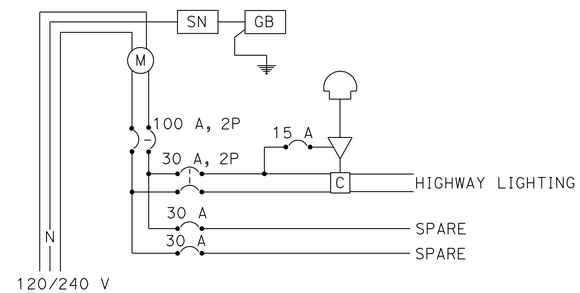


**SERVICE WIRING DIAGRAM**

CTID No. 01140530003580

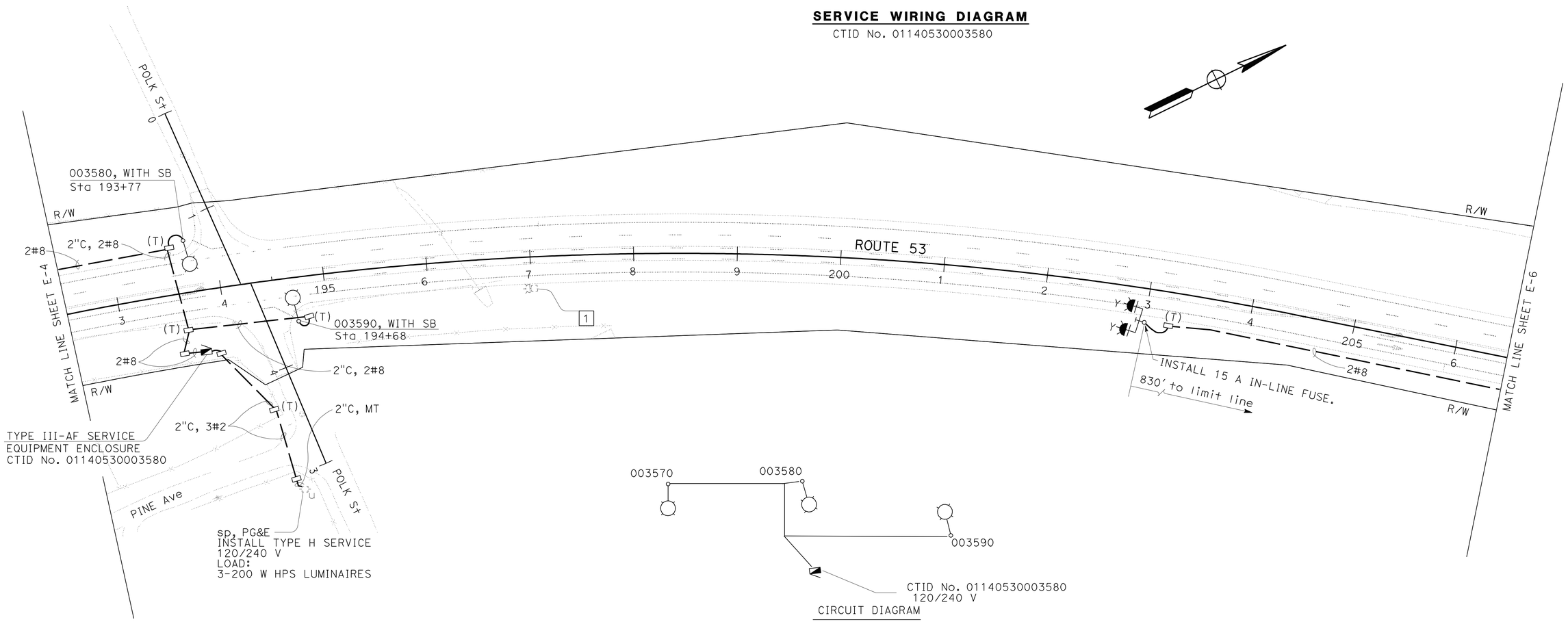


# HIGHWAY LIGHTING SIGNAL AND LIGHTING (OLYMPIC Dr) SALVAGE FLASHING BEACON

SCALE: 1" = 50'

THIS PLAN IS ACCURATE FOR ELECTRICAL WORK ONLY.

E-5

REVISED BY | DATE REVISED
ZAHRA NIKNAFS | MARY ANN HUDSPETH
CALCULATED- DESIGNED BY | CHECKED BY
FUNCTIONAL SUPERVISOR
STEVEN BLOCK

STATE OF CALIFORNIA - DEPARTMENT OF TRANSPORTATION
Caltrans
OFFICE OF ELECTRICAL DESIGN MARYSVILLE

13986uua005.dgn

LAST REVISION 04-26-10 | DATE PLOTTED => 14-JUN-2010 | TIME PLOTTED => 06:39

| Dist | COUNTY | ROUTE | POST MILES TOTAL PROJECT | SHEET No. | TOTAL SHEETS |
|---|---|---|---|---|---|
| 01 | Lak | 53 | 2.8/7.5 | 172 | 217 |

REGISTERED ELECTRICAL ENGINEER 3-25-10 DATE

6-1-10
PLANS APPROVAL DATE

REGISTERED PROFESSIONAL ENGINEER MARY ANN HUDSPETH No. 17245 Exp. 06-30-10 ELECTRICAL STATE OF CALIFORNIA

*THE STATE OF CALIFORNIA OR ITS OFFICERS OR AGENTS SHALL NOT BE RESPONSIBLE FOR THE ACCURACY OR COMPLETENESS OF ELECTRONIC COPIES OF THIS PLAN SHEET.*

NOTE:

FOR ACCURATE RIGHT OF WAY AND ACCESS DATA, CONTACT RIGHT OF WAY ENGINEERING AT THE DISTRICT OFFICE.

**PROJECT NOTES (THIS SHEET ONLY)**

4 RC EXISTING TYPE II SERVICE EQUIPMENT ENCLOSURE.

5 FURNISH AND INSTALL TYPE CAD6 TELEPHONE DEMARCATION ENCLOSURE. SEE DETAIL THIS SHEET.

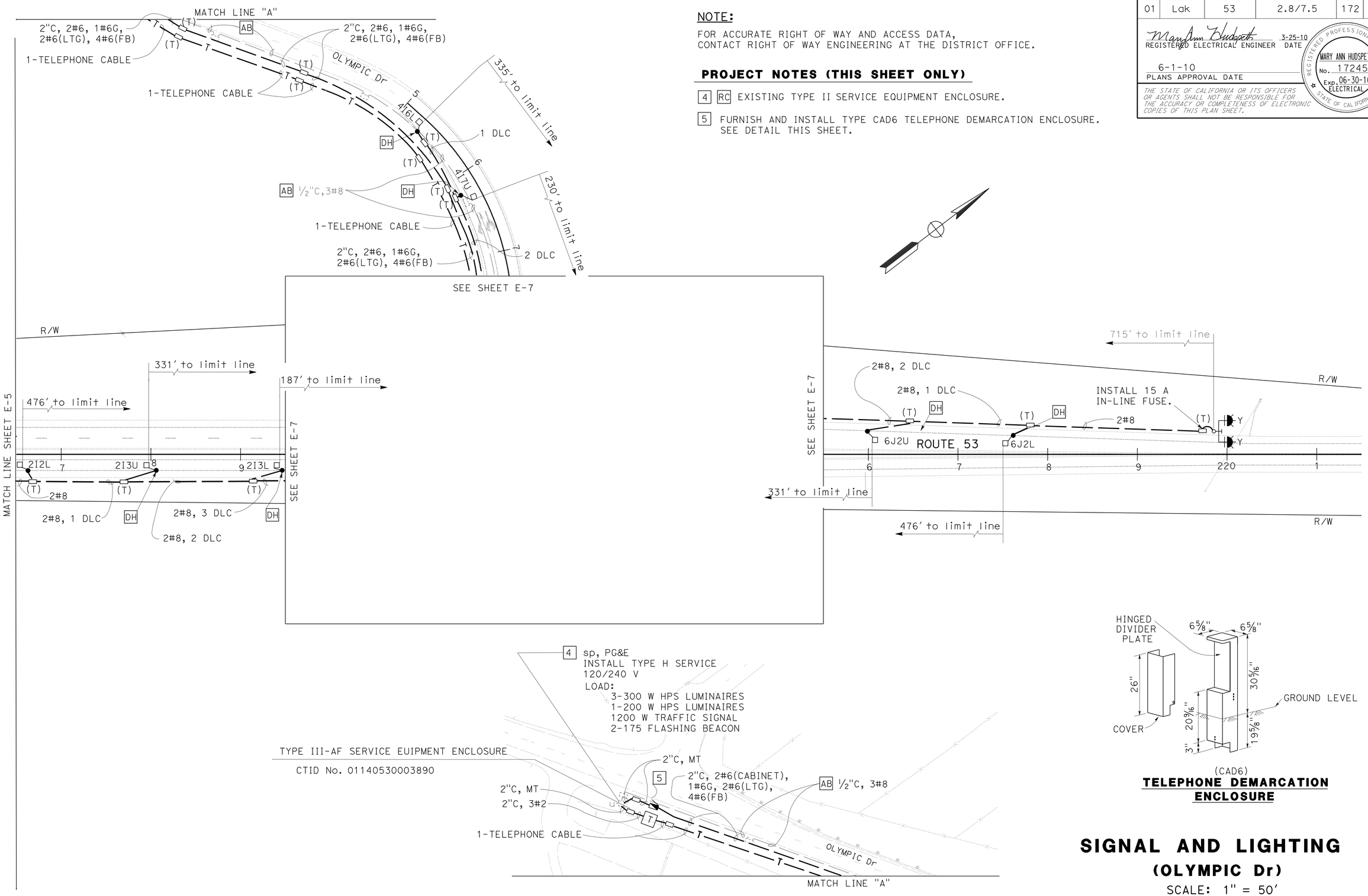





(CAD6)
**TELEPHONE DEMARCATION ENCLOSURE**

# SIGNAL AND LIGHTING
## (OLYMPIC Dr)
SCALE: 1" = 50'

THIS PLAN IS ACCURATE FOR ELECTRICAL WORK ONLY.

E-6

REVISED BY | DATE REVISED
ZAHRA NIKNAFS | MARY ANN HUDSPETH
CALCULATED-DESIGNED BY | CHECKED BY
FUNCTIONAL SUPERVISOR
STEVEN BLOCK

STATE OF CALIFORNIA - DEPARTMENT OF TRANSPORTATION
Caltrans
OFFICE OF ELECTRICAL DESIGN MARYSVILLE

13986uua006.dgn

LAST REVISION | DATE PLOTTED => 14-JUN-2010
05-05-10 | TIME PLOTTED => 06:40

BORDER LAST REVISED 3/1/2007 | RELATIVE BORDER SCALE IS IN INCHES 0 1 2 3 | USERNAME => trmikesl | DGN FILE => 13986uua006.dgn | CU 03390 | EA 3986U1

| Dist | COUNTY | ROUTE | POST MILES TOTAL PROJECT | SHEET No. | TOTAL SHEETS |
|---|---|---|---|---|---|
| 01 | Lak | 53 | 2.8/7.5 | 173 | 217 |

REGISTERED ELECTRICAL ENGINEER 3-25-10 DATE

6-1-10
PLANS APPROVAL DATE

REGISTERED PROFESSIONAL ENGINEER MARY ANN HUDSPETH No. 17245 Exp. 06-30-10 ELECTRICAL STATE OF CALIFORNIA

*THE STATE OF CALIFORNIA OR ITS OFFICERS OR AGENTS SHALL NOT BE RESPONSIBLE FOR THE ACCURACY OR COMPLETENESS OF ELECTRONIC COPIES OF THIS PLAN SHEET.*

**NOTE:**

FOR ACCURATE RIGHT OF WAY AND ACCESS DATA, CONTACT RIGHT OF WAY ENGINEERING AT THE DISTRICT OFFICE.

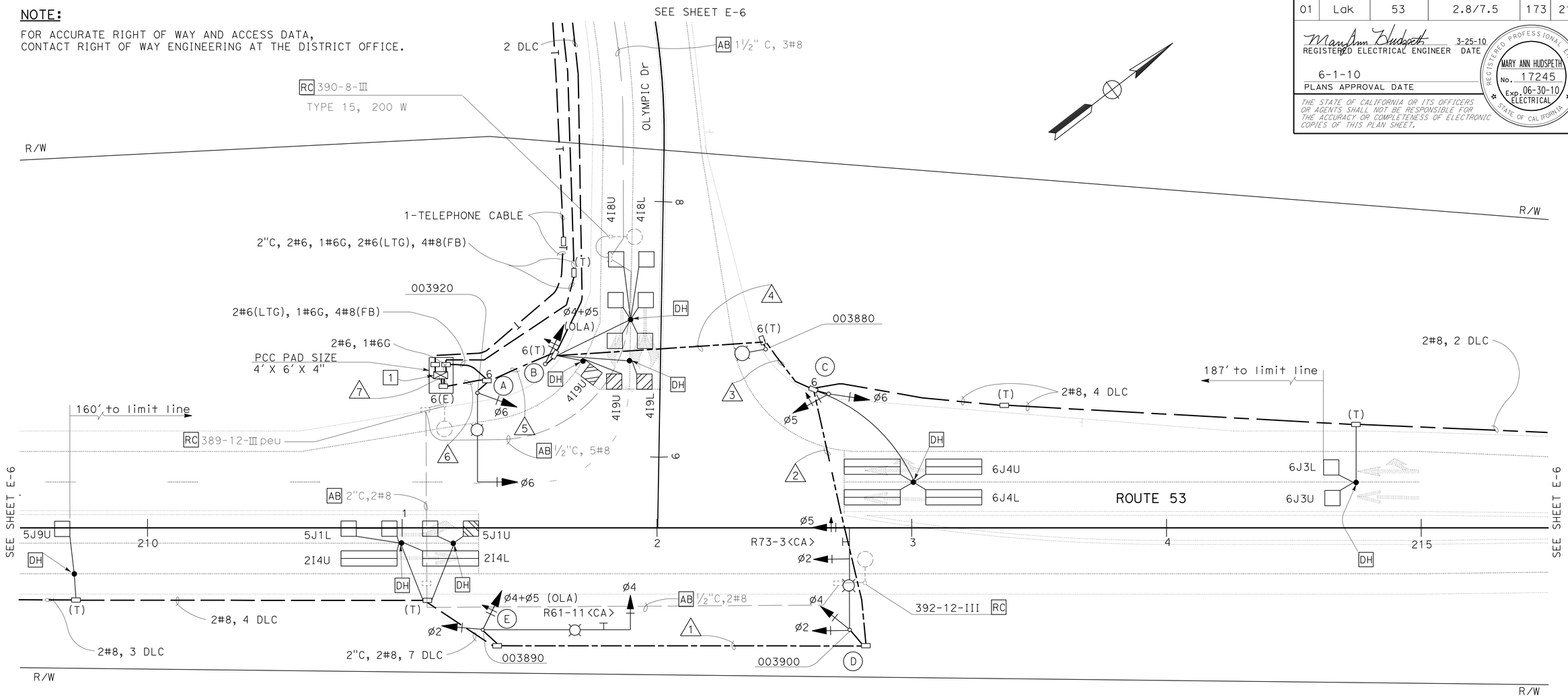


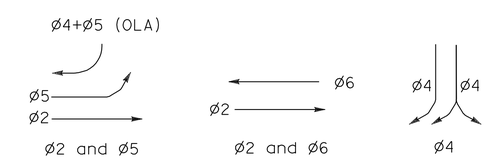


**PHASE DIAGRAM**

## PROJECT NOTES (THIS SHEET ONLY):

1. INSTALL STATE-FURNISHED MODEL 2070 CONTROLLER ASSEMBLY AND MODEL 332 CABINET WITH BATTERY BACKUP SYSTEM.

# SIGNAL AND LIGHTING
## (OLYMPIC Dr)

SCALE: 1" = 20'

**E-7**

THIS PLAN IS ACCURATE FOR ELECTRICAL WORK ONLY.

REVISED BY | DATE REVISED
ZAHRA NIKNAFS | MARY ANN HUDSPETH
CALCULATED-DESIGNED BY | CHECKED BY
FUNCTIONAL SUPERVISOR
STEVEN BLOCK

STATE OF CALIFORNIA - DEPARTMENT OF TRANSPORTATION
Caltrans
OFFICE OF ELECTRICAL DESIGN MARYSVILLE

13986uua007.dgn

LAST REVISION 05-06-10 | DATE PLOTTED => 14-JUN-2010 | TIME PLOTTED => 06:40

BORDER LAST REVISED 3/1/2007 | RELATIVE BORDER SCALE IS IN INCHES 0 1 2 3 | USERNAME => trmikesl | DGN FILE => 13986uua007.dgn | CU 03390 | EA 3986U1

| Dist | COUNTY | ROUTE | POST MILES TOTAL PROJECT | SHEET No. | TOTAL SHEETS |
|---|---|---|---|---|---|
| 01 | Lak | 53 | 2.8/7.5 | 174 | 217 |

REGISTERED ELECTRICAL ENGINEER 3-25-10 DATE

6-1-10
PLANS APPROVAL DATE

REGISTERED PROFESSIONAL ENGINEER MARY ANN HUDSPETH No. 17245 Exp. 06-30-10 ELECTRICAL STATE OF CALIFORNIA

*THE STATE OF CALIFORNIA OR ITS OFFICERS OR AGENTS SHALL NOT BE RESPONSIBLE FOR THE ACCURACY OR COMPLETENESS OF ELECTRONIC COPIES OF THIS PLAN SHEET.*

## POLE AND EQUIPMENT SCHEDULE

| No. | STANDARD Type | SMA | LMA | VEH SIG MTG ø | Mast Arm | ø | POLE | HPS LUMINAIRE | SPECIAL REQUIREMENTS |
|---|---|---|---|---|---|---|---|---|---|
| A | 24A-3-100 | 35 | 15 | 6 | MAS | 6 | SV-1-T | 310 W | |
| B | 1-A | | | | | OLA | TV-1-T | | SEE DETAIL B |
| C | 1-A | | | | | 6,5 | TV-2-T | | |
| D | 24A-4-100 | 40 | 15 | 2,5 | MAS MAT | 2,4 | SV-2-TA | 310 W | |
| E | 61A-5-100 | 60 | 15 | 4 | MAS | 2 OLA | SV-2-TA | 310 W | SEE DETAIL B |

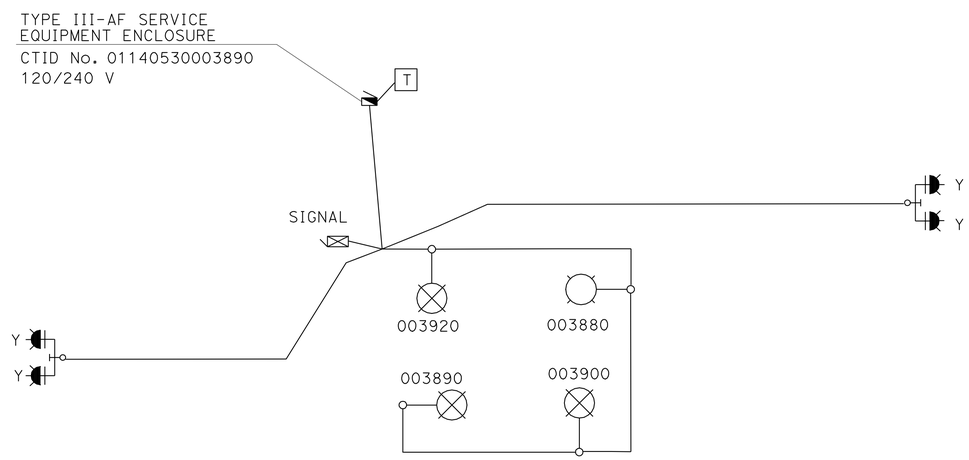


**CIRCUIT DIAGRAM**

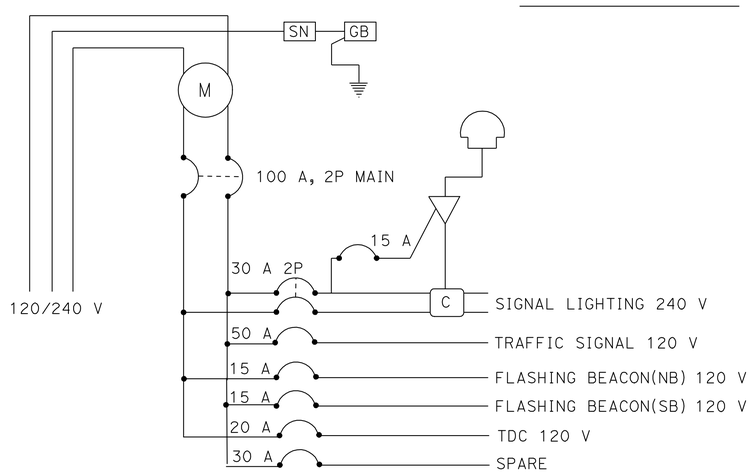


**SERVICE WIRING DIAGRAM**

CTID No. 01140530003890

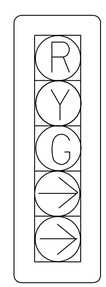


**"DETAIL B"**

## CONDUCTOR AND CONDUIT SCHEDULE

| CABLE SCHEDULE | | | CONDUIT RUN NUMBER AND SIZE | | | | | | |
|---|---|---|---|---|---|---|---|---|---|
| CABLE TYPE | Std | PHASE | 1 | 2 | 3 | 4 | 5 | 6 | 7 |
| VEH 12CSC | A | 6 | | | | | | 1 | 1 |
| | B | (4+5) OLA | | | | | 1 | 1 | 1 |
| | C | 5,6 | | | 1 | 1 | 1 | 1 | 1 |
| | D | 2,4,5 | | 1 | 1 | 1 | 1 | 1 | 1 |
| | E | 2,4 (4+5) OLA | 1 | 1 | 1 | 1 | 1 | 1 | 1 |
| | | | | | | | | | |
| | TOTAL CABLES | | 1 | 2 | 3 | 3 | 4 | 5 | 5 |
| | | | | | | | | | |
| AWG 6 | | LUMINAIRES | 2 | 2 | 2 | 2 | 2 | | |
| AWG 8 | | FLASHING BEACON | 2 | 2 | 4 | 4 | 4 | | |
| AWG 6 | | GROUND | 1 | 1 | 1 | 1 | 1 | 1 | 1 |
| | | | | | | | | | |
| | | DETECTOR | | | | | | | |
| TYPE B DLC | ø2 | | 4 | 4 | 4 | 4 | 4 | 4 | 4 |
| | ø4 | | | | | | 6 | 6 | 6 |
| | ø5 | | 3 | 3 | 3 | 3 | 3 | 3 | 3 |
| | ø6 | | | | 6 | 6 | 6 | 6 | 6 |
| | | | | | | | | | |
| TOTAL DLC | | | 7 | 7 | 13 | 13 | 19 | 19 | 19 |
| CONDUIT SIZE | | | 3" | 3" | 4" | 2-3" | 2-3" | 2-3" | 2-3" |

# SIGNAL AND LIGHTING
## (OLYMPIC Dr)
## (DETAILS)

NO SCALE

THIS PLAN IS ACCURATE FOR ELECTRICAL WORK ONLY.

**E-8**

| REVISED BY | DATE REVISED |
|---|---|
| | |

CALCULATED-DESIGNED BY: ZAHRA NIKNAFS
CHECKED BY: MARY ANN HUDSPETH
FUNCTIONAL SUPERVISOR: STEVEN BLOCK

STATE OF CALIFORNIA - DEPARTMENT OF TRANSPORTATION
Caltrans OFFICE OF ELECTRICAL DESIGN MARYSVILLE

13986uua008.dgn

LAST REVISION 04-26-10 | DATE PLOTTED => 14-JUN-2010 | TIME PLOTTED => 06:40

| Dist | COUNTY | ROUTE | POST MILES TOTAL PROJECT | SHEET No. | TOTAL SHEETS |
|---|---|---|---|---|---|
| 01 | Lak | 53 | 2.8/7.5 | 175 | 217 |

REGISTERED ELECTRICAL ENGINEER 3-25-10 DATE

6-1-10
PLANS APPROVAL DATE

REGISTERED PROFESSIONAL ENGINEER MARY ANN HUDSPETH No. 17245 Exp. 06-30-10 ELECTRICAL STATE OF CALIFORNIA

*THE STATE OF CALIFORNIA OR ITS OFFICERS OR AGENTS SHALL NOT BE RESPONSIBLE FOR THE ACCURACY OR COMPLETENESS OF ELECTRONIC COPIES OF THIS PLAN SHEET.*

NOTE:

FOR ACCURATE RIGHT OF WAY AND ACCESS DATA, CONTACT RIGHT OF WAY ENGINEERING AT THE DISTRICT OFFICE.

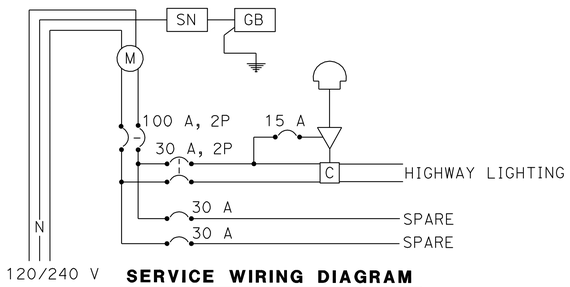


**SERVICE WIRING DIAGRAM**

CTID No. 01140530004880

## PROJECT NOTES (THIS SHEET ONLY)

1 RS EXISTING SOLAR FLASHING BEACON, POLE AND SOLAR EQUIPMENT.

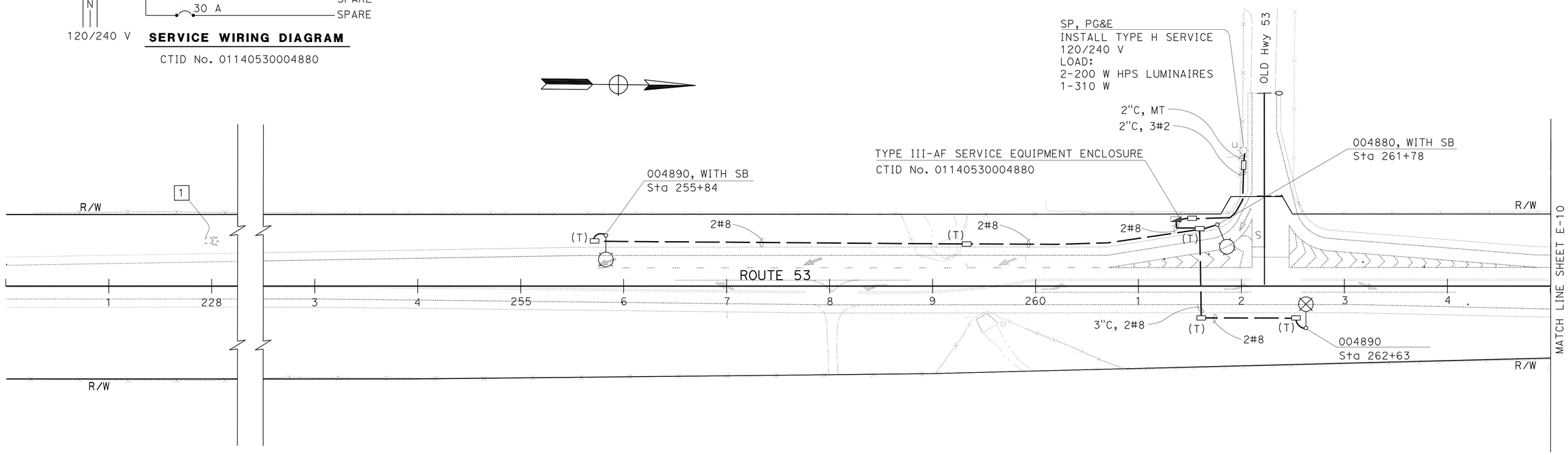


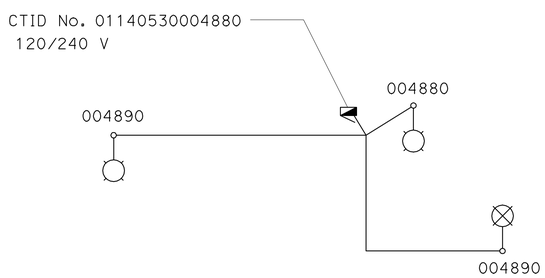


**CIRCUIT DIAGRAM**

# HIGHWAY LIGHTING SALVAGE FLASHING BEACON

SCALE: 1" = 50'

THIS PLAN IS ACCURATE FOR ELECTRICAL WORK ONLY.

E-9

REVISED BY | DATE REVISED

ZAHRA NIKNAFS | MARY ANN HUDSPETH

CALCULATED-DESIGNED BY | CHECKED BY

FUNCTIONAL SUPERVISOR: STEVEN BLOCK

STATE OF CALIFORNIA - DEPARTMENT OF TRANSPORTATION
Caltrans
OFFICE OF ELECTRICAL DESIGN MARYSVILLE

13986uua009.dgn

LAST REVISION 04-26-10 | DATE PLOTTED => 14-JUN-2010 | TIME PLOTTED => 06:40

BORDER LAST REVISED 3/1/2007 | RELATIVE BORDER SCALE IS IN INCHES 0 1 2 3 | USERNAME => trmikesl | DGN FILE => 13986uua009.dgn | CU 03390 | EA 3986U1

| Dist | COUNTY | ROUTE | POST MILES TOTAL PROJECT | SHEET No. | TOTAL SHEETS |
|---|---|---|---|---|---|
| 01 | Lak | 53 | 2.8/7.5 | 176 | 217 |

REGISTERED ELECTRICAL ENGINEER 3-25-10 DATE

6-1-10
PLANS APPROVAL DATE

REGISTERED PROFESSIONAL ENGINEER MARY ANN HUDSPETH No. 17245 Exp. 06-30-10 ELECTRICAL STATE OF CALIFORNIA

*THE STATE OF CALIFORNIA OR ITS OFFICERS OR AGENTS SHALL NOT BE RESPONSIBLE FOR THE ACCURACY OR COMPLETENESS OF ELECTRONIC COPIES OF THIS PLAN SHEET.*

**NOTE:**

FOR ACCURATE RIGHT OF WAY AND ACCESS DATA,
CONTACT RIGHT OF WAY ENGINEERING AT THE DISTRICT OFFICE.

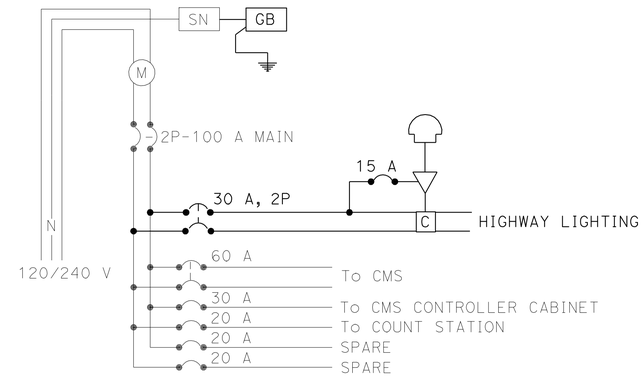


**MODIFIED SERVICE WIRING DIAGRAM**

CTID No. 01140530005080

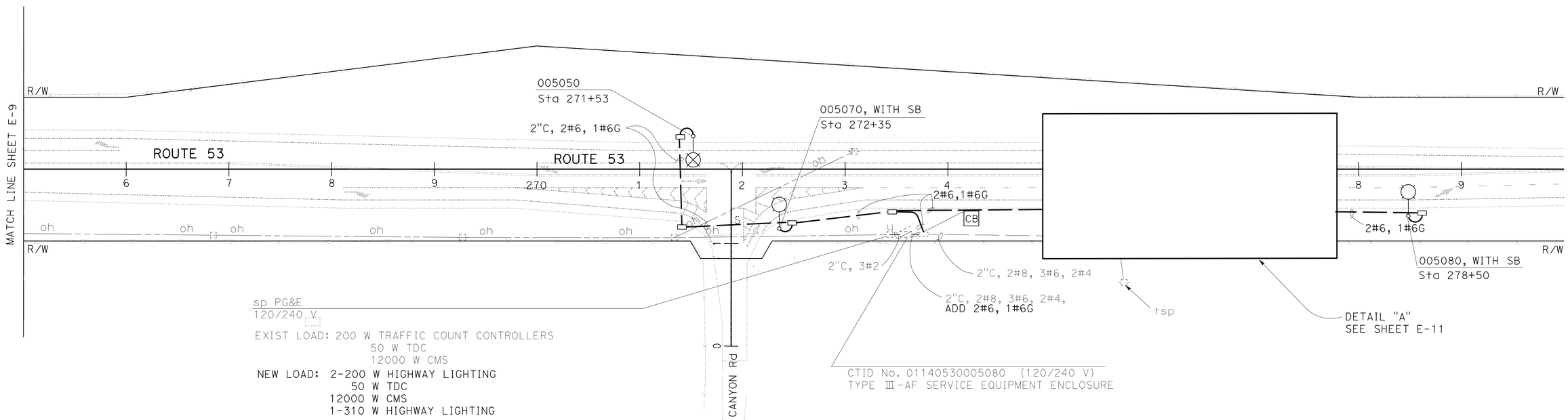


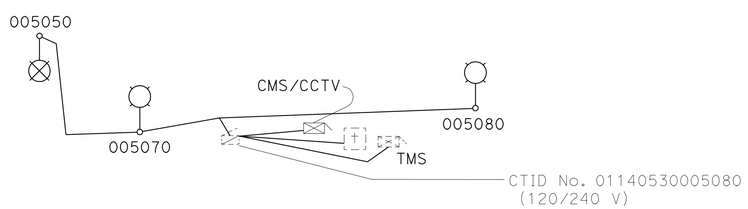


**CIRCUIT DIAGRAM**

# HIGHWAY LIGHTING
# RELOCATE CHANGEABLE MESSAGE SIGN SYSTEM
# RELOCATE CLOSED CIRCUIT TELEVISION SYSTEM
# MODIFY TRAFFIC MONITORING STATION (COUNT)

SCALE: 1" = 50'

THIS PLAN IS ACCURATE FOR ELECTRICAL WORK ONLY.

**E-10**

| | |
|---|---|
| REVISED BY | |
| DATE REVISED | |
| CALCULATED-DESIGNED BY | ZAHRA NIKNAFS |
| CHECKED BY | MARRY ANN HUDSPETH |
| FUNCTIONAL SUPERVISOR | STEVEN BLOCK |

STATE OF CALIFORNIA - DEPARTMENT OF TRANSPORTATION
Caltrans
OFFICE OF ELECTRICAL DESIGN MARYSVILLE

13986uua010.dgn

LAST REVISION 04-26-10 | DATE PLOTTED => 14-JUN-2010 | TIME PLOTTED => 06:40

| Dist | COUNTY | ROUTE | POST MILES TOTAL PROJECT | SHEET No. | TOTAL SHEETS |
|---|---|---|---|---|---|
| 01 | Lak | 53 | 2.8/7.5 | 177 | 217 |

REGISTERED ELECTRICAL ENGINEER 3-25-10 DATE

6-1-10
PLANS APPROVAL DATE

REGISTERED PROFESSIONAL ENGINEER MARY ANN HUDSPETH No. 17245 Exp. 06-30-10 ELECTRICAL STATE OF CALIFORNIA

*THE STATE OF CALIFORNIA OR ITS OFFICERS OR AGENTS SHALL NOT BE RESPONSIBLE FOR THE ACCURACY OR COMPLETENESS OF ELECTRONIC COPIES OF THIS PLAN SHEET.*

NOTE:

FOR ACCURATE RIGHT OF WAY AND ACCESS DATA, CONTACT RIGHT OF WAY ENGINEERING AT THE DISTRICT OFFICE.

**PROJECT NOTES (THIS SHEET ONLY):**

1 AB EXISTING LOOP CONDUCTORS

N1-2
- 1 = ENTERING
- 2 = LEAVING
- LANE NUMBER
  - 1 = 1ST LANE FROM THE LEFT
  - 2 = 2ND LANE FROM THE LEFT
- N = NORTHBOUND
- S = SOUTHBOUND

**FREEWAY MAINLINE DETECTOR**

**DETECTOR IDENTIFICATION**

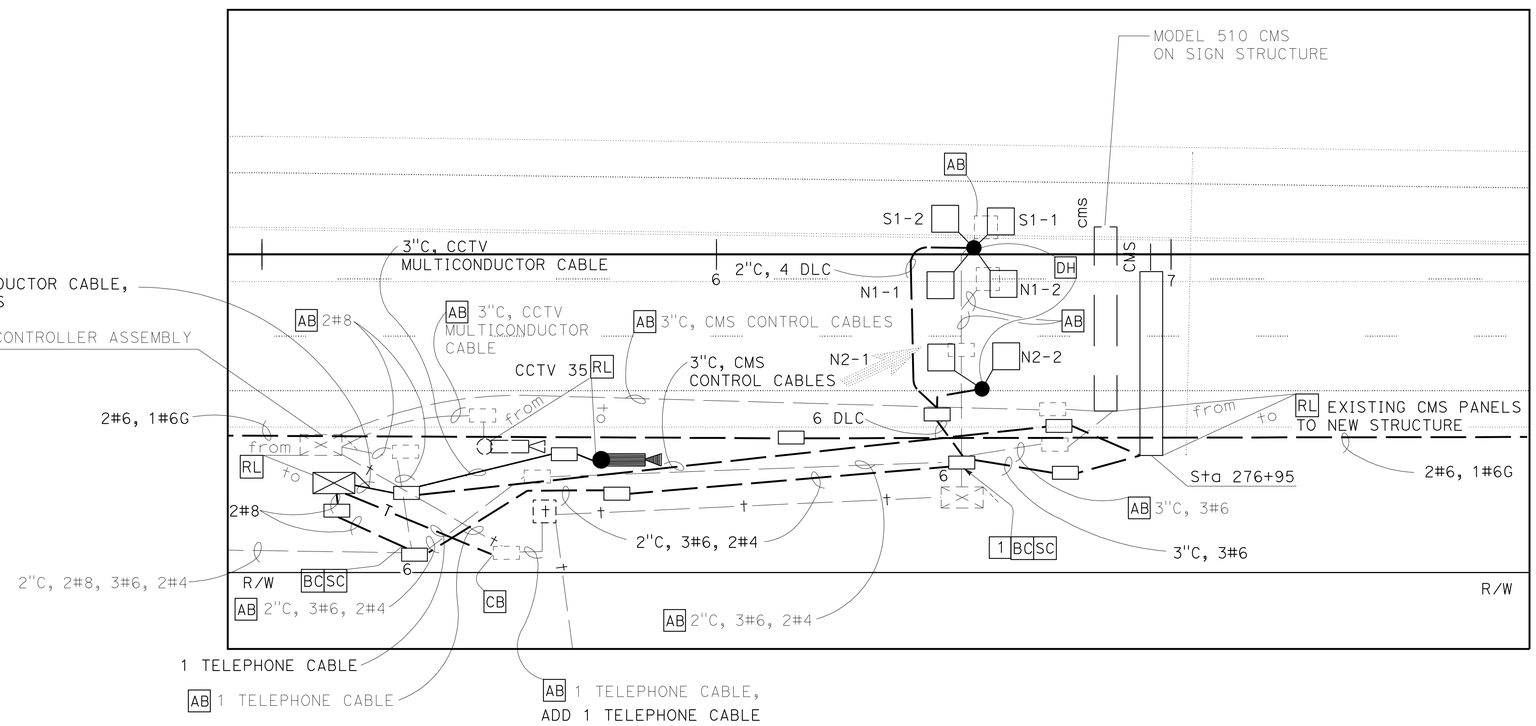


**DETAIL "A"**

# HIGHWAY LIGHTING
# RELOCATE CHANGEABLE MESSAGE SIGN SYSTEM
# RELOCATE CLOSED CIRCUIT TELEVISION SYSTEM
# MODIFY TRAFFIC MONITORING STATION (COUNT)

NO SCALE

THIS PLAN IS ACCURATE FOR ELECTRICAL WORK ONLY.

**E-11**

REVISED BY | DATE REVISED
ZAHRA NIKNAFS | MARRY ANN HUDSPETH
CALCULATED-DESIGNED BY | CHECKED BY
FUNCTIONAL SUPERVISOR
STEVEN BLOCK

STATE OF CALIFORNIA - DEPARTMENT OF TRANSPORTATION
Caltrans
OFFICE OF ELECTRICAL DESIGN MARYSVILLE

13986uua011.dgn

LAST REVISION 04-23-10 | DATE PLOTTED => 14-JUN-2010 | TIME PLOTTED => 06:40

| Dist | COUNTY | ROUTE | POST MILES TOTAL PROJECT | SHEET No. | TOTAL SHEETS |
|---|---|---|---|---|---|
| 01 | Lak | 53 | 2.8/7.5 | 178 | 217 |

REGISTERED ELECTRICAL ENGINEER 3-25-10 DATE

6-1-10
PLANS APPROVAL DATE

REGISTERED PROFESSIONAL ENGINEER
MARY ANN HUDSPETH
No. 17245
Exp. 06-30-10
ELECTRICAL
STATE OF CALIFORNIA

*THE STATE OF CALIFORNIA OR ITS OFFICERS OR AGENTS SHALL NOT BE RESPONSIBLE FOR THE ACCURACY OR COMPLETENESS OF ELECTRONIC COPIES OF THIS PLAN SHEET.*

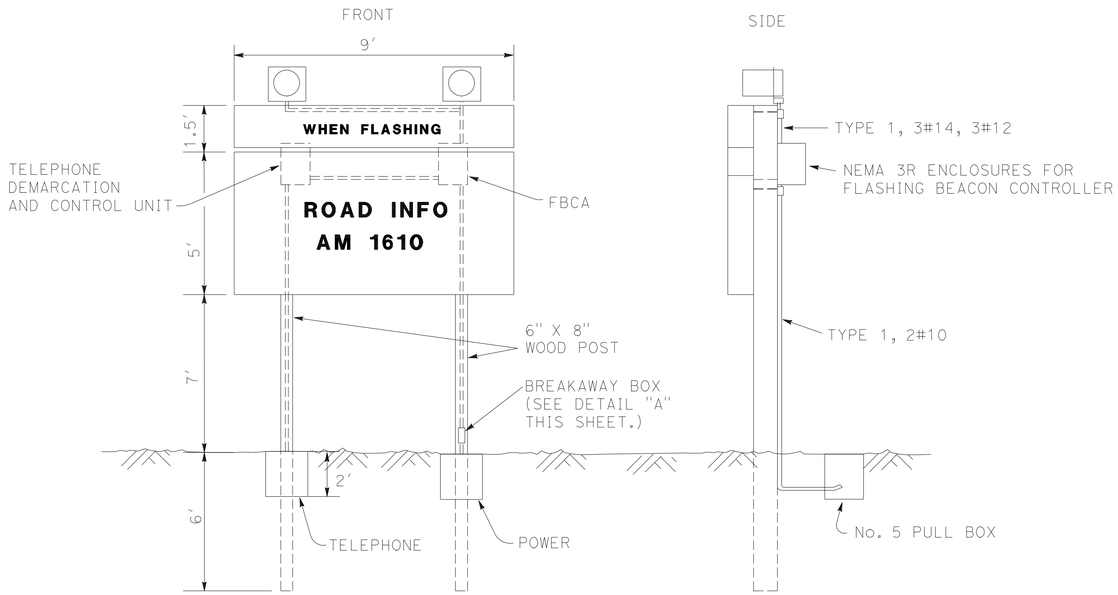


**HIGHWAY ADVISORY RADIO SIGN**

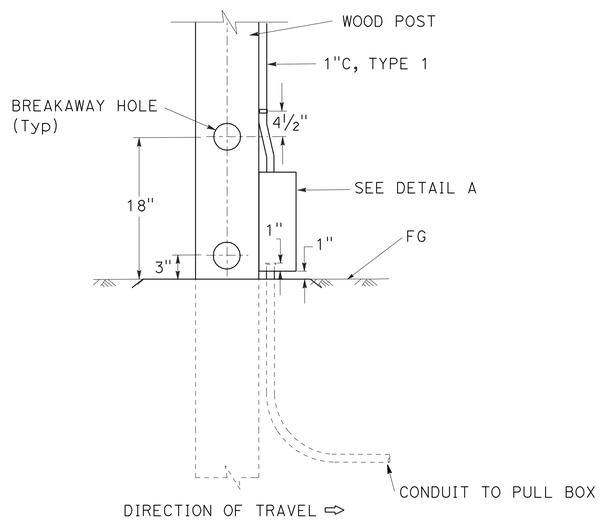


**BREAKAWAY POST**

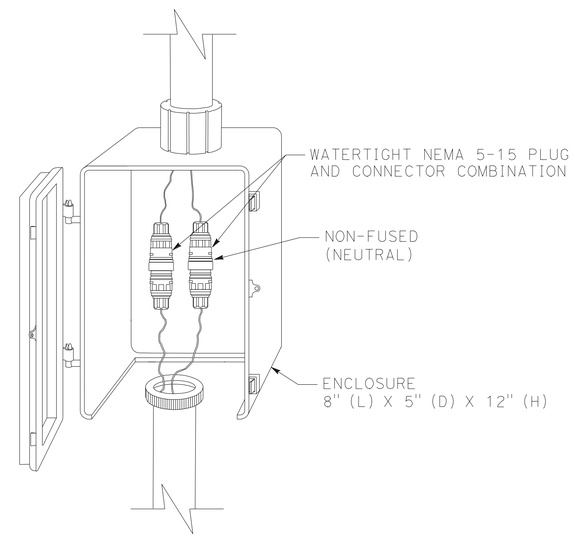


**BREAKAWAY BOX DETAIL "A"**

# RELOCATE HIGHWAY ADVISORY RADIO SYSTEM
## (DETAIL)

SCALE: 1" = 50'

THIS PLAN IS ACCURATE FOR ELECTRICAL WORK ONLY.

**E-12**

| REVISED BY | DATE REVISED |
|---|---|
| | |

CALCULATED-DESIGNED BY: ZAHRA NIKNAFS
CHECKED BY: MARY ANN HUDSPETH
FUNCTIONAL SUPERVISOR: STEVEN BLOCK

STATE OF CALIFORNIA - DEPARTMENT OF TRANSPORTATION
Caltrans
OFFICE OF ELECTRICAL DESIGN MARYSVILLE

13986uua012.dgn

LAST REVISION 04-23-10 | DATE PLOTTED => 14-JUN-2010 | TIME PLOTTED => 06:40

BORDER LAST REVISED 3/1/2007 | RELATIVE BORDER SCALE IS IN INCHES 0 1 2 3 | USERNAME => trmikesl | DGN FILE => 13986uua012.dgn | CU 03390 | EA 3986U1

| Dist | COUNTY | ROUTE | POST MILES TOTAL PROJECT | SHEET No. | TOTAL SHEETS |
|---|---|---|---|---|---|
| 01 | Lak | 53 | 2.8/7.5 | 179 | 217 |

REGISTERED ELECTRICAL ENGINEER 3-25-10 DATE

6-1-10
PLANS APPROVAL DATE

REGISTERED PROFESSIONAL ENGINEER MARY ANN HUDSPETH No. 17245 Exp. 06-30-10 ELECTRICAL STATE OF CALIFORNIA

*THE STATE OF CALIFORNIA OR ITS OFFICERS OR AGENTS SHALL NOT BE RESPONSIBLE FOR THE ACCURACY OR COMPLETENESS OF ELECTRONIC COPIES OF THIS PLAN SHEET.*

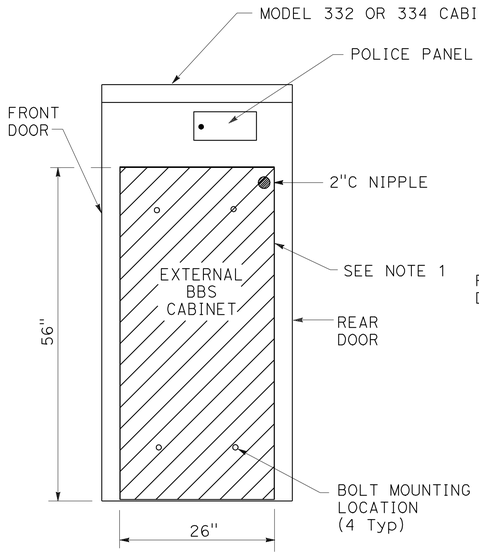


SIDE VIEW

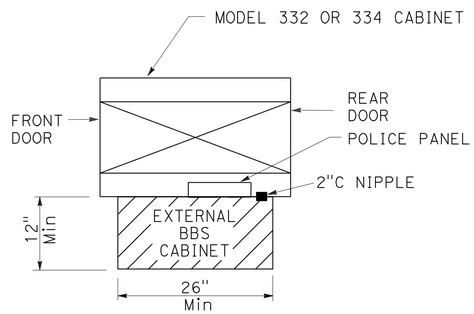


TOP VIEW

**EXTERNAL BBS CABINET MOUNTED TO THE MODEL 332 OR 334 CABINET**

## NOTE: (THIS SHEET ONLY)

1. THE EXTERNAL BBS CABINET SHALL BE MOUNTED TO THE MODEL 332 OR 334 CABINET WITH FOUR 18-8 STAINLESS STEEL HEX HEAD, FULLY-THREADED, 3/8"-16 X 1" BOLTS; TWO WASHERS PER BOLT, DESIGNED FOR 3/8" BOLTS AND ARE 18-8 STAINLESS STEEL, 1" OUTSIDE DIAMETER, ROUND, AND FLAT; AND ONE K-LOCK NUT PER BOLT THAT IS 18-8 STAINLESS STEEL AND A HEX-NUT. THE ENGINEER WILL HAVE TO APPROVE THE BOLT MOUNTING LOCATION PRIOR TO INSTALLATION.
2. THE ANCHOR BOLTS SHALL BE 3/4" Dia X 15" WITH A 2"-90° BEND. THE CABINET MANUFACTURER'S SPECIFICATION SHALL DETERMINE THE LOCATION OF THE ANCHOR BOLTS IN THE FOUNDATION. THE ENGINEER WILL HAVE TO APPROVE THE ANCHOR BOLTS AND ITS LOCATION IN THE FOUNDATION PRIOR TO CONSTRUCTION.
3. THE CONTRACTOR SHALL VERIFY THE DIMENSIONS OF THE BBS CABINET PRIOR TO CONSTRUCTING THE FOUNDATION OF THE MODIFIED PORTION OF THE Std MODEL 332 AND 334 CABINET FOUNDATION. THE ENGINEER WILL HAVE TO APPROVE ANY NECESSARY DEVIATIONS PRIOR TO CONSTRUCTION.
4. ALL DIMENSIONS ARE NOMINAL.

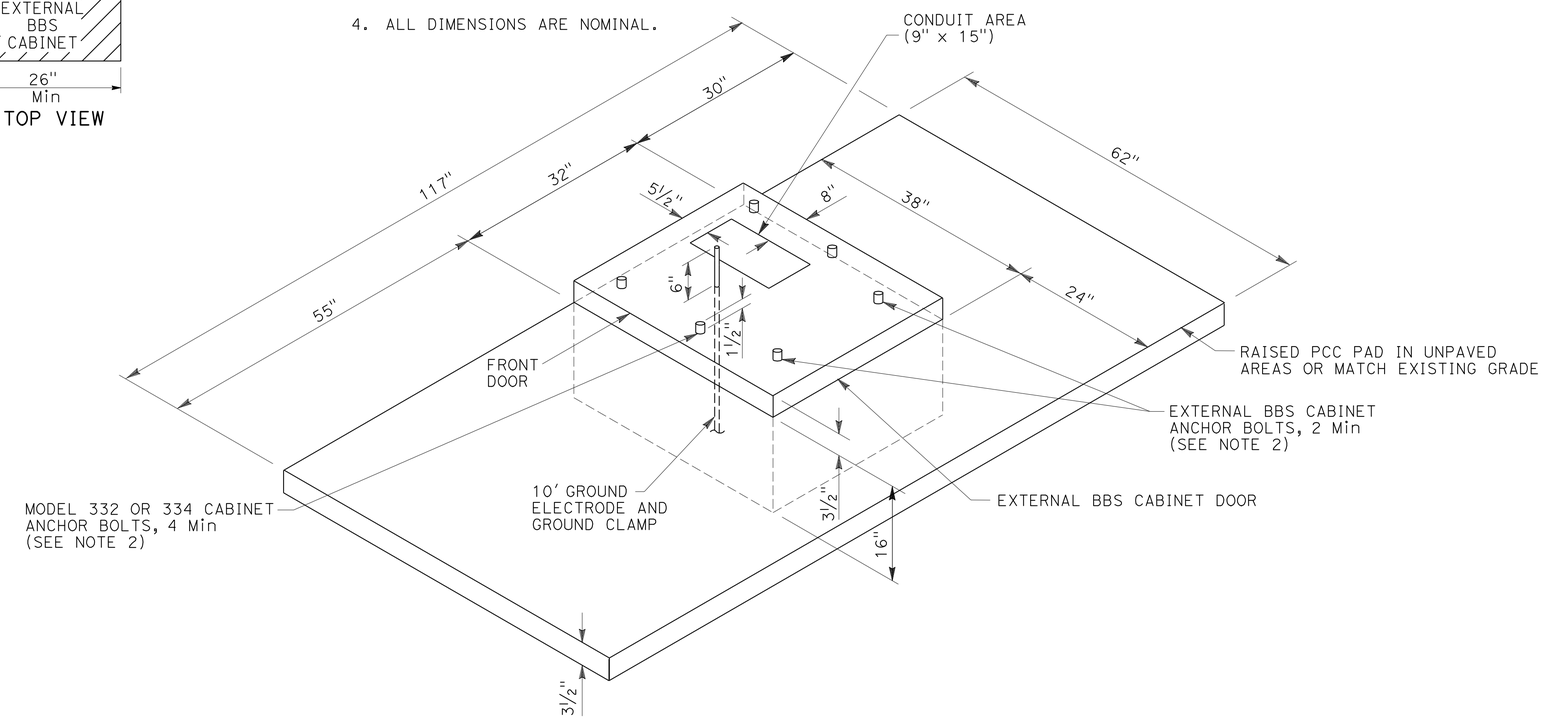


**MODIFIED MODEL 332 AND 334 CABINET FOUNDATION DETAIL FOR BATTERY BACKUP SYSTEM (BBS)**

(FOR DIMENSIONS AND DETAILS NOT SHOWN AND ADDITIONAL NOTES, SEE SHEET ES-3C OF THE STANDARD PLANS FOR MODEL 332 AND 334 CABINETS)

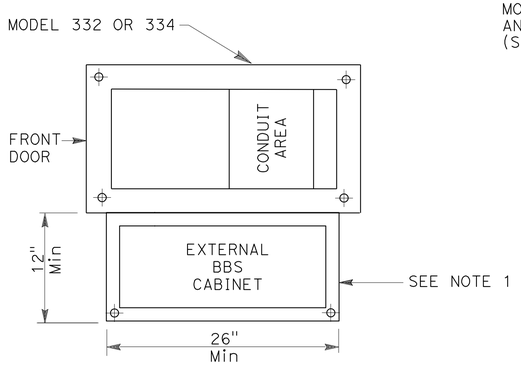


**BASE PLAN FOR BBS MOUNTED TO THE MODEL 332 OR 334 CABINET**

(FOR DIMENSIONS AND DETAILS NOT SHOWN, SEE SHEET A6-1 TO A6-4, CABINET HOUSING DETAILS OF THE TRANSPORTATION ELECTRICAL EQUIPMENT SPECIFICATION (TEES))

THIS PLAN IS ACCURATE FOR ELECTRICAL WORK ONLY.

# ELECTRICAL SYSTEMS (BBS FOUNDATION DETAILS)

NO SCALE

**E-13**

REVISED BY | DATE REVISED
ZAHRA NIKNAFS | MARY ANN HUDSPETH
CALCULATED-DESIGNED BY | CHECKED BY
FUNCTIONAL SUPERVISOR: STEVEN BLOCK

STATE OF CALIFORNIA - DEPARTMENT OF TRANSPORTATION
Caltrans® OFFICE OF ELECTRICAL DESIGN MARYSVILLE

13986uua013.dgn

LAST REVISION 04-23-10 | DATE PLOTTED => 14-JUN-2010 | TIME PLOTTED => 06:40

| Dist | COUNTY | ROUTE | POST MILES TOTAL PROJECT | SHEET No. | TOTAL SHEETS |
|---|---|---|---|---|---|
| 01 | Lak | 53 | 2.8/7.5 | 180 | 217 |

REGISTERED ELECTRICAL ENGINEER 3-25-10 DATE

6-1-10
PLANS APPROVAL DATE

REGISTERED PROFESSIONAL ENGINEER MARY ANN HUDSPETH No. 17245 Exp. 06-30-10 ELECTRICAL STATE OF CALIFORNIA

*THE STATE OF CALIFORNIA OR ITS OFFICERS OR AGENTS SHALL NOT BE RESPONSIBLE FOR THE ACCURACY OR COMPLETENESS OF ELECTRONIC COPIES OF THIS PLAN SHEET.*

## LEGEND: (THIS SHEET ONLY)

AC+ = UNGROUNDED CONDUCTOR
AC- = GROUNDED CONDUCTOR
Batt = BATTERY
Blk = BLACK
BP = BYPASS
C = COMMON
Cntl = CONTROL
Gnd = GROUND
Grn = GREEN
MBPS = MANUAL BYPASS SWITCH
PTS = POWER TRANSFER SWITCH
SF = STATE-FURNISHED
TB = TERMINAL BOARD
Temp = TEMPERATURE
UPS = UNINTERRUPTIBLE POWER SUPPLY
UPSC = UNINTERRUPTIBLE POWER SUPPLY CONTROLLER
UPSM = UPS MODE
Wht = WHITE

## NOTES: (THIS SHEET ONLY)

1. TYPE A REFERS TO THE BBS EQUIPMENT FROM MANUFACTURER A.
2. CASE-1 REFERS TO THE SITUATION WHEN THE ENTIRE BBS EQUIPMENT INCLUDING THE BATTERIES ARE INSTALLED IN THE BBS CABINET.
3. THE LOCATION OF THE 2"C NIPPLE WILL BE DETERMINED BY THE ENGINEER IN THE FIELD.
4. THE CONTRACTOR SHALL FURNISH AND INSTALL A NEMA-1 ENCLOSURE WITH 30 A, 1P, 120/240 VOLTS RATED CIRCUIT BREAKER MANUFACTURED PER UL STANDARD 489.
5. A TEMPERATURE PROBE SHALL BE ATTACHED TO THE BATTERY BY TAPE OR ATTACHED TO THE NEGATIVE TERMINAL OF THE BATTERY.
6. THE ELECTRICAL POWER FOR THE COOLING FAN FOR THE BBS CABINET SHALL BE TAPPED FROM THE BOTTOM OF THE TB IN THE 332 CABINET.
7. THE CONTRACTOR SHALL PROVIDE A 9-WIRE WIRING HARNESS OR BUNDLED 9 MULTICOLOR CONDUCTORS, AWG 18 WIRES FROM THE RELAY ON THE INVERTER/CHARGER UNIT TO THE CONTROLLER. THE ENDS OF THE CONDUCTORS SHALL BE INSULATED WITH TAPE AND A SIX-FOOT COIL ON EACH END.

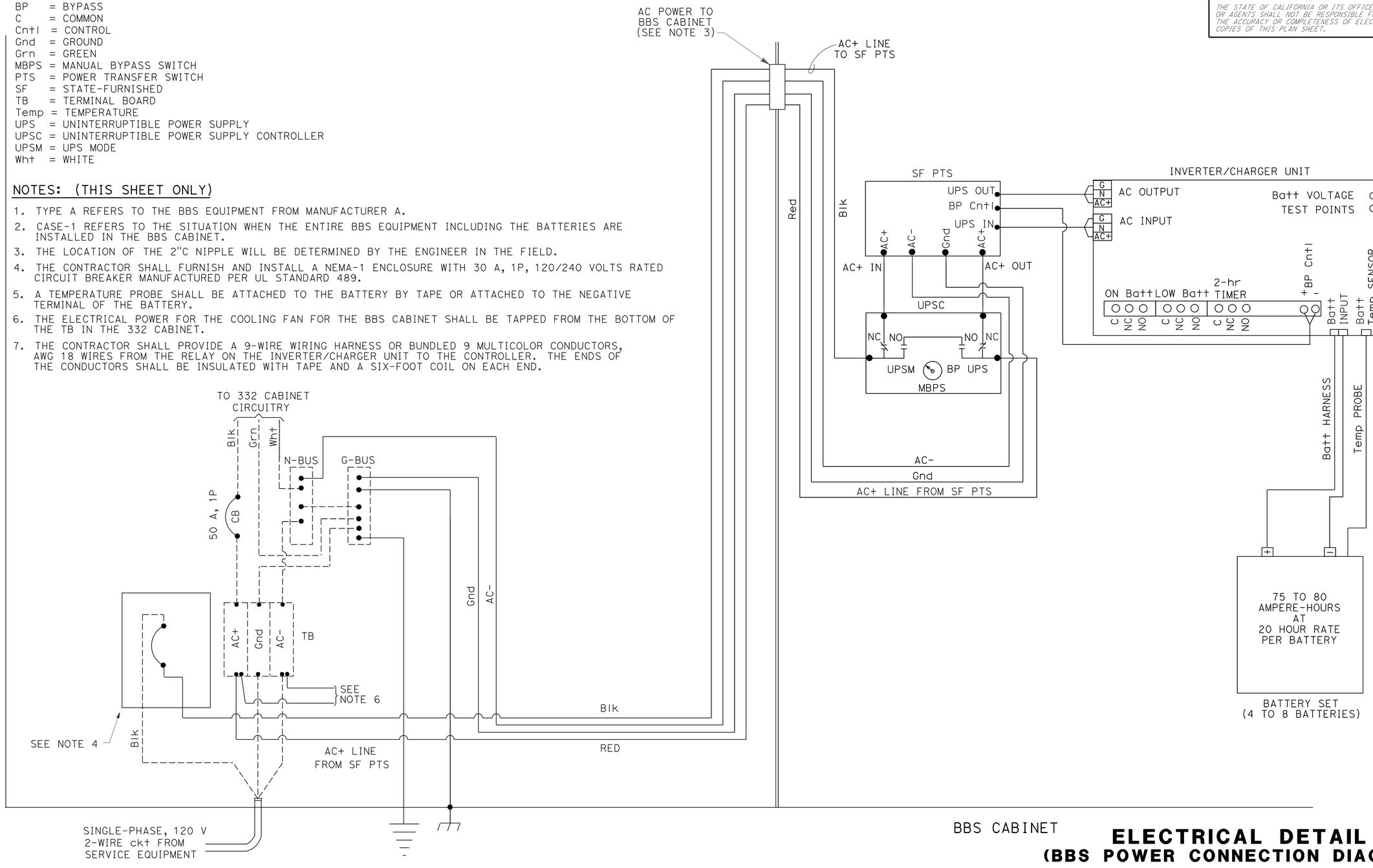


# ELECTRICAL DETAIL
## (BBS POWER CONNECTION DIAGRAM, TYPE A, CASE-1)

NO SCALE

THIS PLAN IS ACCURATE FOR ELECTRICAL WORK ONLY.

E-14

STATE OF CALIFORNIA - DEPARTMENT OF TRANSPORTATION
Caltrans OFFICE OF ELECTRICAL DESIGN MARYSVILLE

FUNCTIONAL SUPERVISOR: STEVEN BLOCK
CALCULATED-DESIGNED BY: ZAHRA NIKNAFS
CHECKED BY: MARY ANN HUDSPETH
REVISED BY
DATE REVISED

LAST REVISION DATE PLOTTED => 14-JUN-2010
TIME PLOTTED => 06:41
04-23-10

13986uua014.dgn

BORDER LAST REVISED 3/1/2007
RELATIVE BORDER SCALE IS IN INCHES 0 1 2 3
USERNAME => trmikesl
DGN FILE => 13986uua014.dgn
CU 03390
EA 3986U1

| Dist | COUNTY | ROUTE | POST MILES TOTAL PROJECT | SHEET No. | TOTAL SHEETS |
|---|---|---|---|---|---|
| 01 | Lak | 53 | 2.8/7.5 | 181 | 217 |

REGISTERED ELECTRICAL ENGINEER 3-25-10 DATE

6-1-10
PLANS APPROVAL DATE

REGISTERED PROFESSIONAL ENGINEER MARY ANN HUDSPETH No. 17245 Exp. 06-30-10 ELECTRICAL STATE OF CALIFORNIA

*THE STATE OF CALIFORNIA OR ITS OFFICERS OR AGENTS SHALL NOT BE RESPONSIBLE FOR THE ACCURACY OR COMPLETENESS OF ELECTRONIC COPIES OF THIS PLAN SHEET.*

## LEGEND: (THIS SHEET ONLY)

AC+ = UNGROUNDED CONDUCTOR
AC- = GROUNDED CONDUCTOR
Batt = BATTERY
Blk = BLACK
BP = BYPASS
C = COMMON
Cntl = CONTROL
Gnd = GROUND
Grn = GREEN
MBPS = MANUAL BYPASS SWITCH
PTS = POWER TRANSFER SWITCH
SF = STATE-FURNISHED
TB = TERMINAL BOARD
Temp = TEMPERATURE
UPS = UNINTERRUPTIBLE POWER SUPPLY
UPSC = UNINTERRUPTIBLE POWER SUPPLY CONTROLLER
UPSM = UPS MODE
Wht = WHITE

## NOTES: (THIS SHEET ONLY)

1. TYPE B REFERS TO THE BBS EQUIPMENT FROM MANUFACTURER B.
2. CASE-1 REFERS TO THE SITUATION WHEN THE ENTIRE BBS EQUIPMENT INCLUDING THE BATTERIES ARE INSTALLED IN THE BBS CABINET.
3. THE LOCATION OF THE 2"C NIPPLE WILL BE DETERMINED BY THE ENGINEER IN THE FIELD.
4. THE CONTRACTOR SHALL FURNISH AND INSTALL A NEMA-1 ENCLOSURE WITH 30 A, 1P, 120/240 VOLTS RATED CIRCUIT BREAKER MANUFACTURED PER UL STANDARD 489.
5. A TEMPERATURE PROBE SHALL BE ATTACHED TO THE BATTERY BY TAPE OR ATTACHED TO THE NEGATIVE TERMINAL OF THE BATTERY.
6. THE ELECTRICAL POWER FOR THE COOLING FAN FOR THE BBS CABINET SHALL BE TAPPED FROM THE BOTTOM OF THE TB IN THE 332 CABINET.
7. THE CONTRACTOR SHALL PROVIDE A 9-WIRE WIRING HARNESS OR BUNDLED 9 MULTICOLOR CONDUCTORS, AWG 18 WIRES FROM THE RELAY ON THE INVERTER/CHARGER UNIT TO THE CONTROLLER. THE ENDS OF THE CONDUCTORS SHALL BE INSULATED WITH TAPE AND A SIX-FOOT COIL ON EACH END.

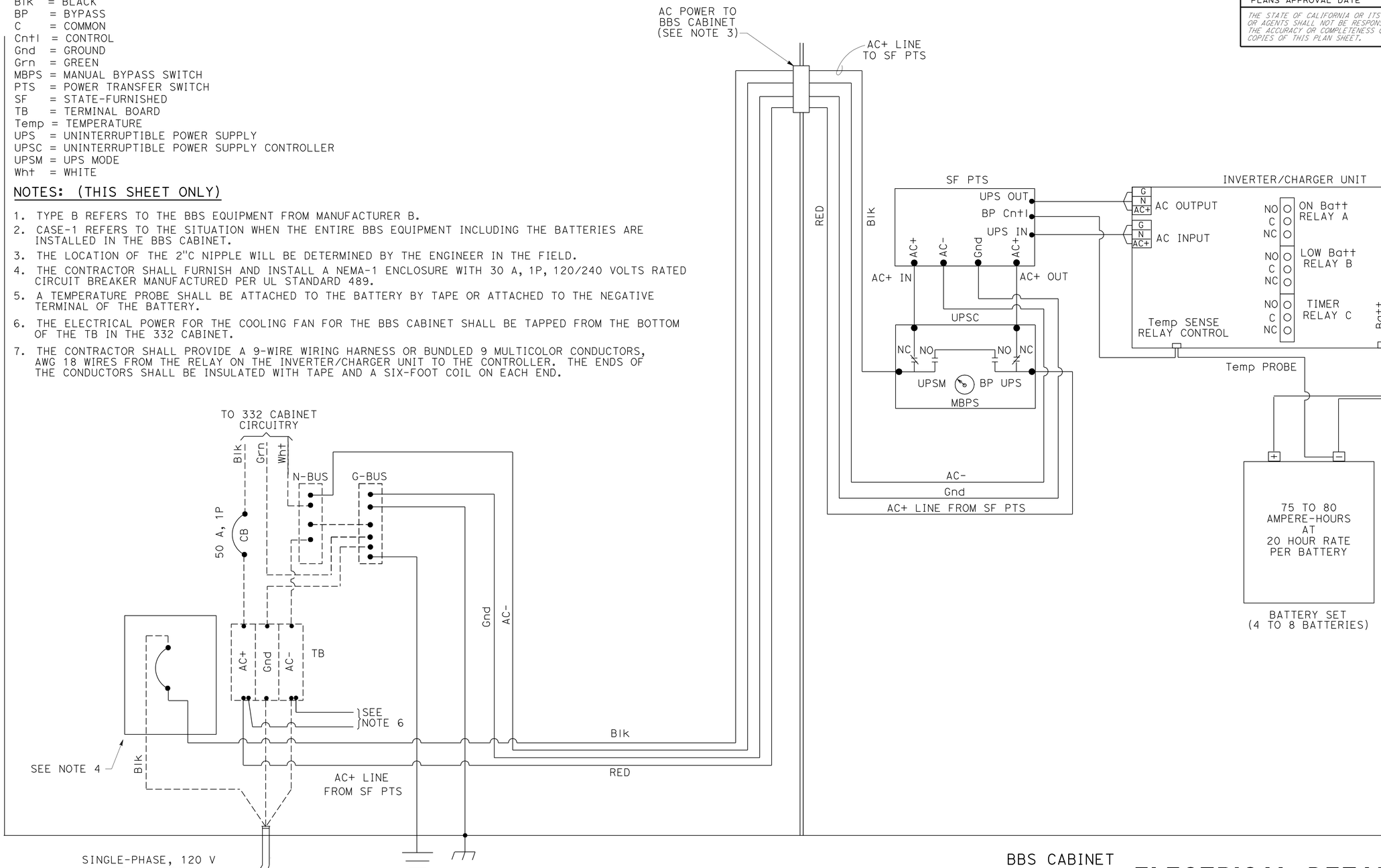


# ELECTRICAL DETAIL
## (BBS POWER CONNECTION DIAGRAM, TYPE B, CASE-1)

NO SCALE

**E-15**

THIS PLAN IS ACCURATE FOR ELECTRICAL WORK ONLY.

STATE OF CALIFORNIA - DEPARTMENT OF TRANSPORTATION
Caltrans® OFFICE OF ELECTRICAL DESIGN MARYSVILLE

FUNCTIONAL SUPERVISOR: STEVEN BLOCK
CALCULATED-DESIGNED BY: ZAHRA NIKNAFS
CHECKED BY: MARY ANN HUDSPETH
REVISED BY
DATE REVISED

LAST REVISION 04-23-10
DATE PLOTTED => 14-JUN-2010
TIME PLOTTED => 06:41

13986uua015.dgn

| DIST | COUNTY | ROUTE | POST MILES TOTAL PROJECT | SHEET NO. | TOTAL SHEETS |
|---|---|---|---|---|---|
| 01 | Lak | 53 | 2.8/7.5 | 182 | 217 |

REGISTERED CIVIL ENGINEER

November 17, 2006
PLANS APPROVAL DATE

REGISTERED PROFESSIONAL ENGINEER Dallas Forester No. C37765 Exp. 12-31-06 CIVIL STATE OF CALIFORNIA

*The State of California or its officers or agents shall not be responsible for the accuracy or completeness of electronic copies of this plan sheet.*

*To accompany plans dated* 6-1-10

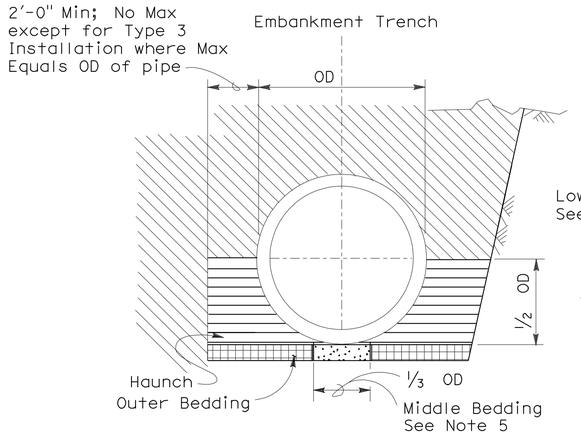


BACKFILL

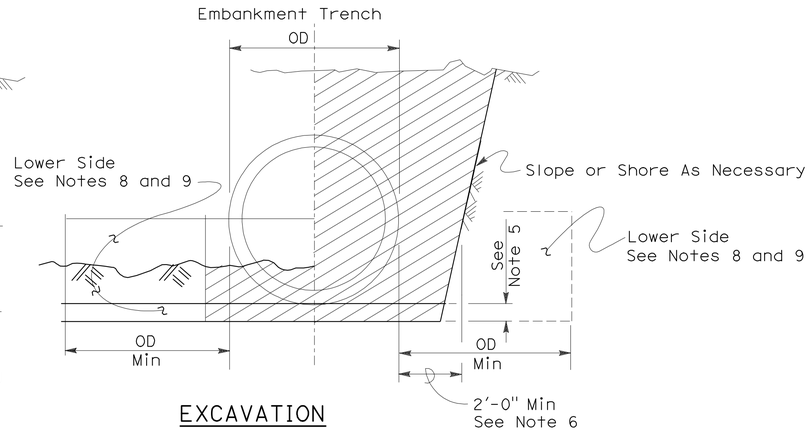


EXCAVATION

Roadway Embankment

Structure Backfill (Culvert) See Note 6

Structure Backfill (Culvert) See Note 6

Loose Backfill

Excavation Structure (Culvert)

## TYPE 1 INSTALLATION:

The haunch and outer bedding shall be compacted to a minimum 90 percent relative compaction. In addition, the minimum sand equivalent in these areas shall be 30 and the maximum percentage passing the 75 $\mu$m sieve size shall be 12.

## TYPE 2 INSTALLATION:

The haunch and outer bedding shall be compacted to a minimum 90 percent relative compaction. In addition, the minimum sand equivalent in these areas shall be 25.

## TYPE 3 INSTALLATION:

The haunch and outer bedding shall be compacted to a minimum 85 percent relative compaction. 90 percent relative compaction will be required where the fill over the pipe is less than 4'-0" or 1/2 OD.

## NOTES:

1. Unless otherwise shown on the plans or specified in the special provision, the Contractor shall have the option of selecting the class of RCP and the type of installation to be used, provided the height of cover does not exceed the value shown for the RCP selected.
   Example: 24" RCP culvert with maximum cover of 19'-0" the options are:
   a) Class III or stronger with Installation Type 1.
   b) Class III Special or stronger with Installation Type 2.
   c) Class IV Special or stronger with Installation Type 3.
   Cover is defined as the maximum vertical distance from top of the pipe to finished grade within the length of any given culvert.
2. The class of RCP and Installation Type selected shall be the same throughout the length of any given culvert.
3. The "length of any culvert" is defined as the culvert between:
   a) Successive drainage structure (inlets, junction boxes, headwalls, etc.).
   b) A drainage structure and the inlet or outlet end of the culvert.
   c) The inlet and outlet end of the culvert when there are no intervening drainage structures.
4. Oval and arch shaped RCP shall not be used.
5. 1/25 OD Min, not less than 3".
6. Slurry cement backfill may be substituted for backfill in the outer bedding and haunch areas. If slurry is used the outer and middle beddings shall be omitted. Prior to installation the soil under the middle 1/3 of the outside diameter of the pipe shall be softened by scarifying or other means to a minimum depth of 1/25 OD, but not less than 3". Where slurry cement backfill is used clear distance to trench wall may be reduced as set forth in Section 19-3.062 of the Standard Specifications.
7. Backfill shall be placed full width of excavation except where dimensions are shown for backfill width or thickness. Dimensions shown are minimums.
8. Lower side shall be suitable material as determined by the Engineer. Otherwise it shall be considered unsuitable as set forth in Section 19-2.02 of the Standard Specifications. See Note 9.
9. Where the pipe is placed in a trench, if the trench walls are sloped at 5 vertical to 1 horizontal or steeper for at least 90 percent of the trench height or up to not less than 12" from the grading plane, the firmness of the soil in the lower side need not be considered.
10. Non-reinforced precast concrete pipe sizes 3'-0" or smaller may be placed under installation Types 1, 2 or 3.

### INSTALLATION TYPE 1

| MINIMUM CLASS AND D-LOAD | COVER | |
|---|---|---|
| | 108" Dia AND SMALLER | OVER 108" Dia |
| Class II 1000D | 14.9' | 12.9' |
| Class III 1350D | 15.0' - 20.9' | 13.0' - 18.9' |
| Class III Special 1700D | 21.0' - 26.9' | 19.0' - 24.9' |
| Class IV 2000D | 27.0' - 31.9' | 25.0' - 29.9' |
| Class IV Special 2500D | 32.0' - 40.9' | 30.0' - 38.9' |
| Class V 3000D | 41.0' - 49.9' | 39.0' - 46.9' |
| Class V Special 3600D | 50.0' - 59.0' | 47.0' - 58.0' |

### INSTALLATION TYPE 2

| MINIMUM CLASS AND D-LOAD | COVER |
|---|---|
| Class II 1000D | 9.9' |
| Class III 1350D | 10.0'- 14.9' |
| Class III Special 1700D | 15.0' - 19.9' |
| Class IV 2000D | 20.0' - 24.9' |
| Class IV Special 2500D | 25.0' - 31.9' |
| Class V 3000D | 32.0' - 38.9' |
| Class V Special 3600D | 39.0' - 47.0' |

### INSTALLATION TYPE 3

| MINIMUM CLASS AND D-LOAD | COVER | |
|---|---|---|
| | 48" Dia AND SMALLER | OVER 48" Dia |
| Class II 1000D | 7.9' | 5.9' |
| Class III 1350D | 8.0' - 10.9' | 6.0' - 8.9' |
| Class III Special 1700D | 11.0' - 14.9' | 9.0' - 12.9' |
| Class IV 2000D | 15.0' - 17.9' | 13.0' - 15.9' |
| Class IV Special 2500D | 18.0' - 21.9' | 16.0' - 19.9' |
| Class V 3000D | 22.0' - 26.9' | 20.0' - 24.9' |
| Class V Special 3600D | 30.0' - 33.0' | 25.0' - 31.0' |

STATE OF CALIFORNIA
DEPARTMENT OF TRANSPORTATION

# EXCAVATION AND BACKFILL CONCRETE PIPE CULVERTS

NO SCALE

RSP A62DA DATED NOVEMBER 17, 2006 SUPERSEDES STANDARD PLAN A62DA DATED MAY 1, 2006 - PAGE 20 OF THE STANDARD PLANS BOOK DATED MAY 2006.

**REVISED STANDARD PLAN RSP A62DA**

**2006 REVISED STANDARD PLAN RSP A62DA**

10-26-06

| DIST | COUNTY | ROUTE | POST MILES TOTAL PROJECT | SHEET NO. | TOTAL SHEETS |
|---|---|---|---|---|---|
| 01 | Lak | 53 | 2.8/7.5 | 183 | 217 |

Randell D. Hiatt
REGISTERED CIVIL ENGINEER

October 20, 2006
PLANS APPROVAL DATE

REGISTERED PROFESSIONAL ENGINEER
Randell D. Hiatt
No. C50200
Exp. 6-30-07
CIVIL
STATE OF CALIFORNIA

*The State of California or its officers or agents shall not be responsible for the accuracy or completeness of electronic copies of this plan sheet.*

*To accompany plans dated* 6-1-10

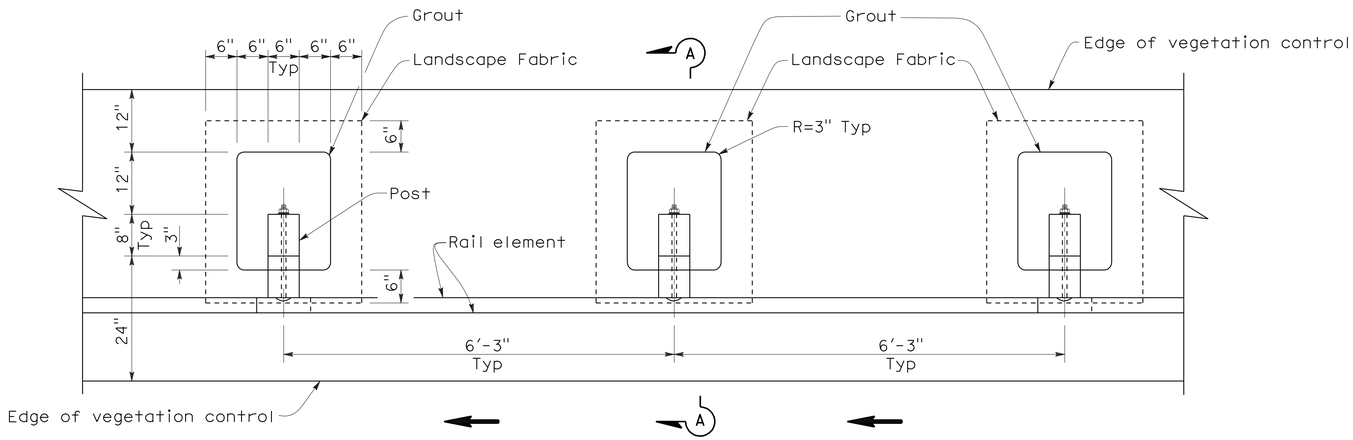


PLAN

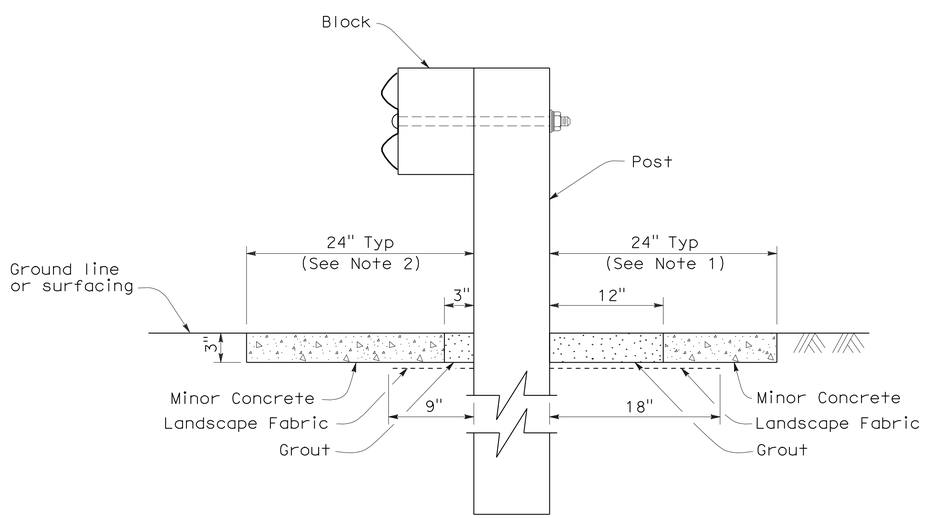


SECTION A-A

## NOTES:

1. Where the distance between back of post and hinge point is less than 24", vegetation control to be constructed flush with the back edge of the post.
2. Where dike is constructed under railing, construct vegetation control to back edge of dike. Where paved shoulder is constructed within 24" in front of the post, construct vegetation control to the edge of paved shoulder.
3. Direction of adjacent traffic indicated by ← .

STATE OF CALIFORNIA
DEPARTMENT OF TRANSPORTATION

# METAL BEAM GUARD RAILING TYPICAL VEGETATION CONTROL STANDARD RAILING SECTION

NO SCALE

NSP A77C5 DATED OCTOBER 20, 2006 SUPPLEMENTS THE STANDARD PLANS BOOK DATED MAY 2006.

**NEW STANDARD PLAN NSP A77C5**

**2006 NEW STANDARD PLAN NSP A77C5**

| DIST | COUNTY | ROUTE | POST MILES TOTAL PROJECT | SHEET NO. | TOTAL SHEETS |
|---|---|---|---|---|---|
| 01 | Lak | 53 | 2.8/7.5 | 184 | 217 |

Randell D. Hiatt
REGISTERED CIVIL ENGINEER

October 20, 2006
PLANS APPROVAL DATE

REGISTERED PROFESSIONAL ENGINEER
Randell D. Hiatt
No. C50200
Exp. 6-30-07
CIVIL
STATE OF CALIFORNIA

*The State of California or its officers or agents shall not be responsible for the accuracy or completeness of electronic copies of this plan sheet.*

*To accompany plans dated* 6-1-10

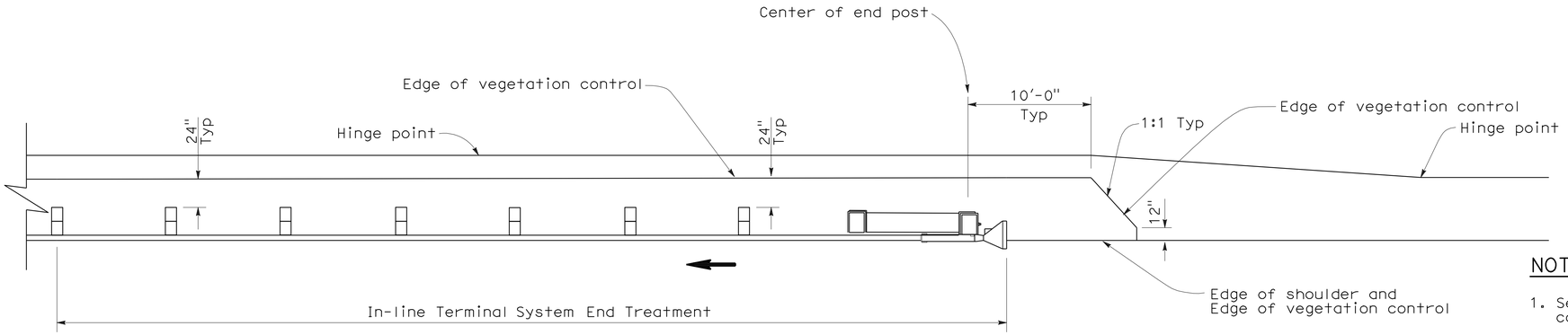


PLAN

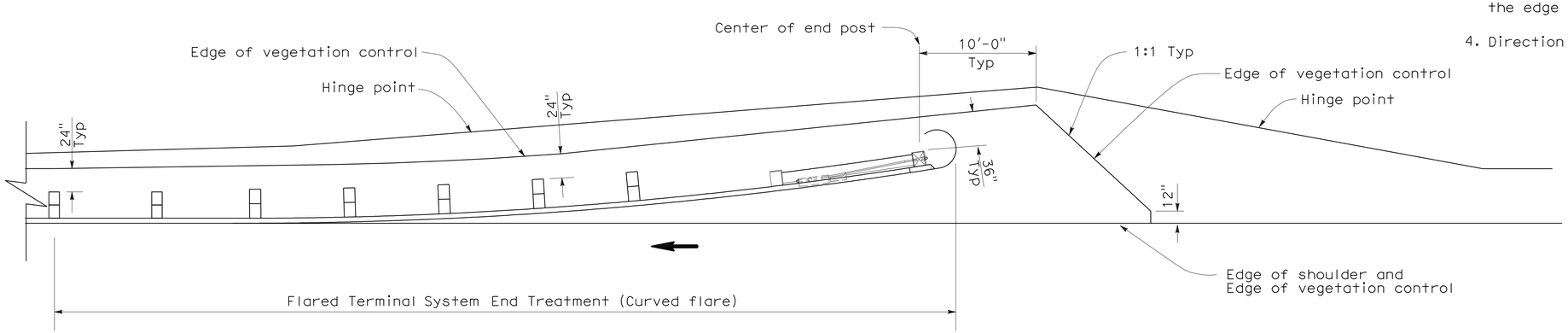


PLAN

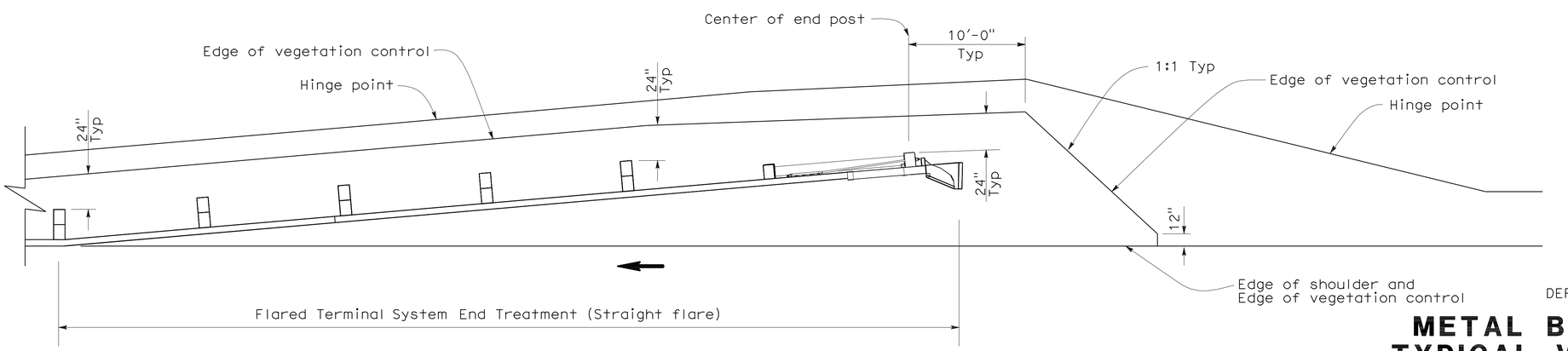


PLAN

## NOTES:

1. See New Standard Plan NSP A77C5 for additional vegetation control details.
2. Where the distance between back of post and hinge point is less than 24", vegetation control to be constructed flush with the back edge of the post.
3. Where dike is constructed under railing, construct vegetation control to back edge of dike. Where paved shoulder is constructed within 24" in front of the post, construct vegetation control to the edge of paved shoulder.
4. Direction of adjacent traffic indicated by ←.

STATE OF CALIFORNIA
DEPARTMENT OF TRANSPORTATION

# METAL BEAM GUARD RAILING TYPICAL VEGETATION CONTROL FOR TERMINAL SYSTEM END TREATMENTS

NO SCALE

NSP A77C6 DATED OCTOBER 20, 2006 SUPPLEMENTS THE STANDARD PLANS BOOK DATED MAY 2006.

**NEW STANDARD PLAN NSP A77C6**

**2006 NEW STANDARD PLAN NSP A77C6**

7-17-06

| DIST | COUNTY | ROUTE | POST MILES TOTAL PROJECT | SHEET NO. | TOTAL SHEETS |
|---|---|---|---|---|---|
| 01 | Lak | 53 | 2.8/7.5 | 185 | 217 |

Randell D. Hiatt
REGISTERED CIVIL ENGINEER

October 20, 2006
PLANS APPROVAL DATE

REGISTERED PROFESSIONAL ENGINEER
Randell D. Hiatt
No. C50200
Exp. 6-30-07
CIVIL
STATE OF CALIFORNIA

*The State of California or its officers or agents shall not be responsible for the accuracy or completeness of electronic copies of this plan sheet.*

*To accompany plans dated* 6-1-10

## NOTES:

1. See New Standard Plan NSP A77C5 for additional vegetation control details.
2. Where the distance between back of post and hinge point is less than 24", vegetation control to be constructed flush with the back edge of the post.
3. Where dike is constructed under railing, construct vegetation control to back edge of dike. Where paved shoulder is constructed within 24" in front of the post, construct vegetation control to the edge of paved shoulder.
4. Direction of adjacent traffic indicated by ←.

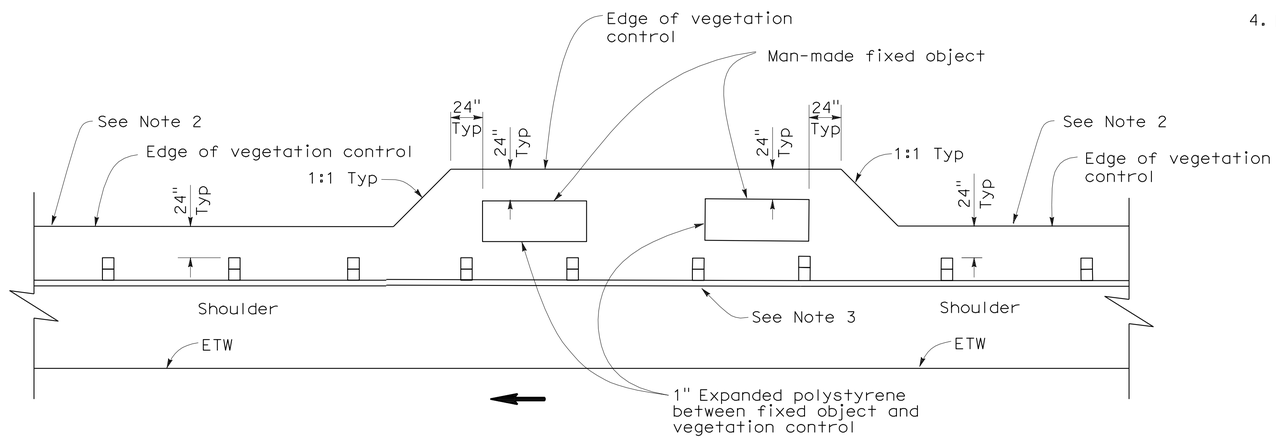


## PLAN

FIXED OBJECT(S) ON SHOULDER

STATE OF CALIFORNIA
DEPARTMENT OF TRANSPORTATION

# METAL BEAM GUARD RAILING TYPICAL VEGETATION CONTROL AT FIXED OBJECT

NO SCALE

NSP A77C8 DATED OCTOBER 20, 2006 SUPPLEMENTS THE STANDARD PLANS BOOK DATED MAY 2006.

**NEW STANDARD PLAN NSP A77C8**

**2006 NEW STANDARD PLAN NSP A77C8**

7-17-06

| DIST | COUNTY | ROUTE | POST MILES TOTAL PROJECT | SHEET NO. | TOTAL SHEETS |
|---|---|---|---|---|---|
| 01 | Lak | 53 | 2.8/7.5 | 186 | 217 |

Randell D. Hiatt
REGISTERED CIVIL ENGINEER

June 5, 2009
PLANS APPROVAL DATE

REGISTERED PROFESSIONAL ENGINEER
Randell D. Hiatt
No. C50200
Exp. 6-30-09
CIVIL
STATE OF CALIFORNIA

*The State of California or its officers or agents shall not be responsible for the accuracy or completeness of electronic copies of this plan sheet.*

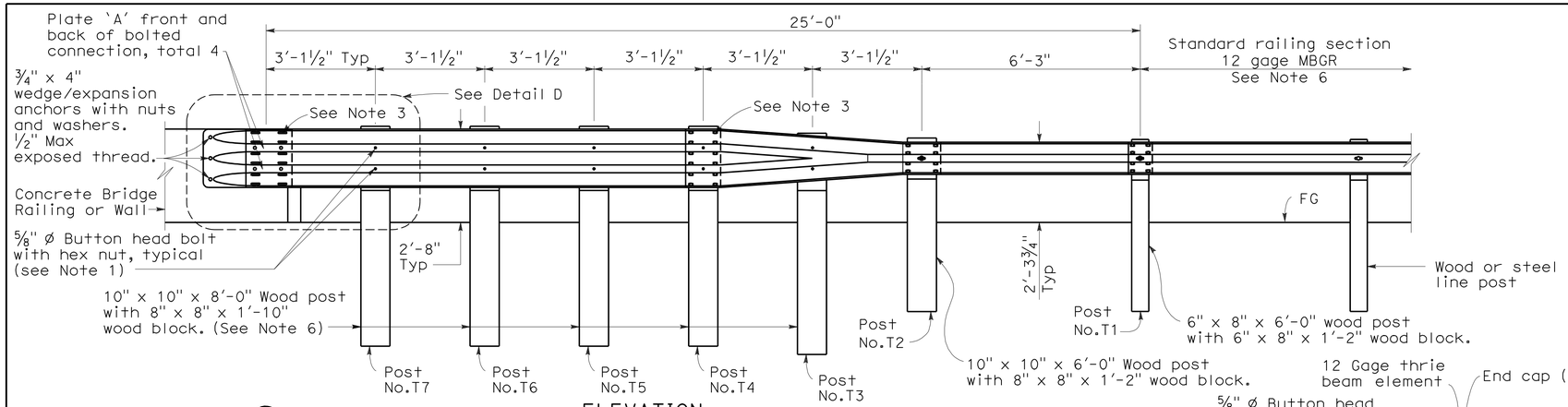


ELEVATION

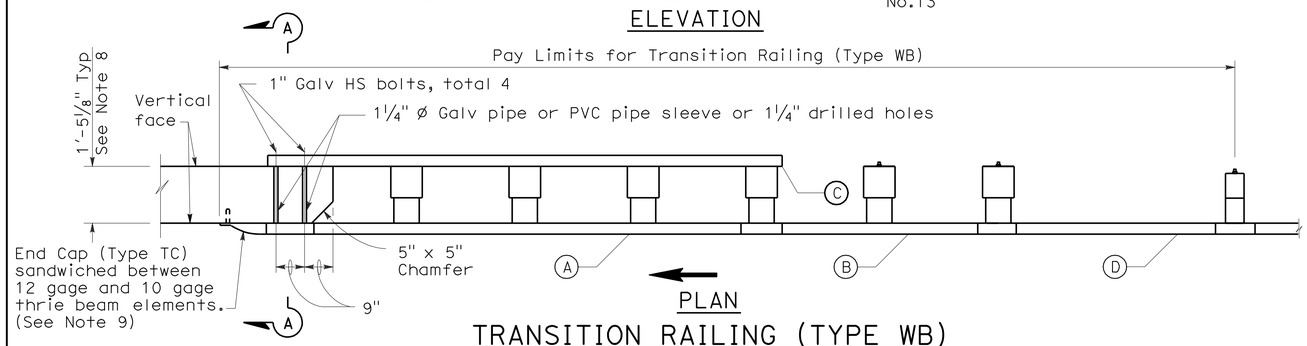


PLAN

TRANSITION RAILING (TYPE WB)

(No Blockout Attachment)

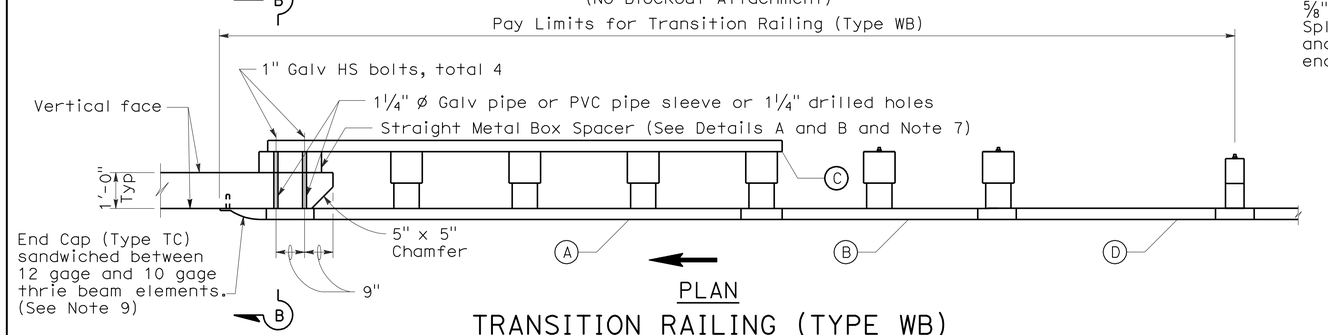


PLAN

TRANSITION RAILING (TYPE WB)

(Blockout Attachment)

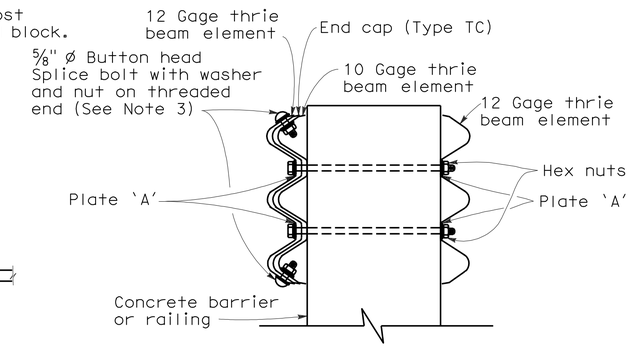


SECTION A-A

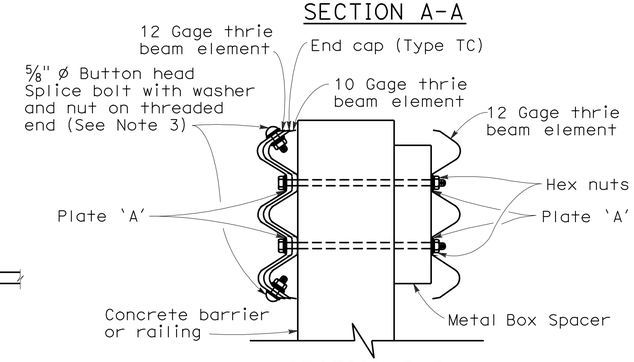


SECTION B-B

## LEGEND

(A) Nested thrie beam elements (one 12 gage element nested over one 10 gage element).

(B) One 10 gage "W" beam to thrie beam element.

(C) One 12 gage thrie beam element.

(D) One 10 gage "W" beam rail element (7'-3½" length)

10 gage = 0.135" thick

12 gage = 0.108" thick

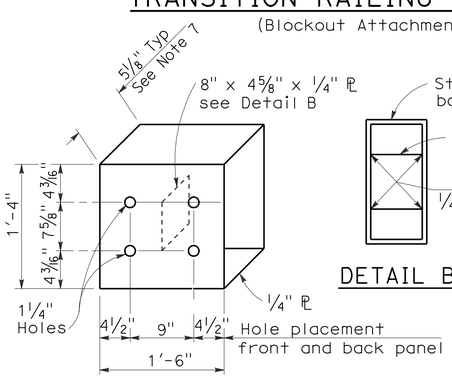


DETAIL A

STRAIGHT METAL BOX SPACER

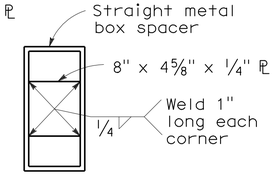


DETAIL B

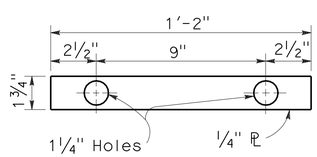


DETAIL C

PLATE 'A'

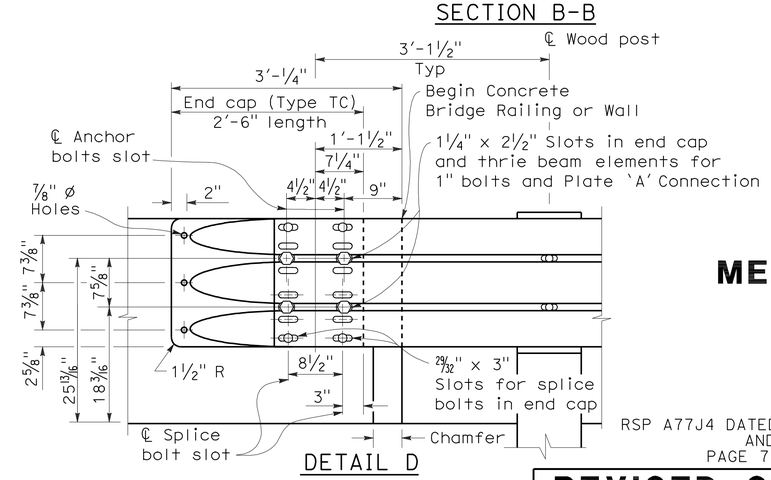


DETAIL D

## NOTES:

*To accompany plans dated* 6-1-10

1. Use 5/8 " ø Button head bolts and hex nuts for connections to posts. No washer on rail face for bolted connections to post.
2. The nested rail elements, end cap, and 'W' beam to thrie beam element may be spliced together prior to bolting the elements to the wood post and concrete barrier or railing.
3. Exterior splice bolt holes for rail element splices at Post No.T4 and the connection to the concrete barrier or railing shall be the standard 29/32 " x 1 1/8 " slot size. Interior splice bolt holes at these locations may be increased up to 1 1/4 " ø. Only the top 2 and the bottom 2 splice bolts with washers and nuts are required for rail splices at Post No.T4 and the connection to the concrete barrier or railing.
4. Direction of adjacent traffic indicated by →.
5. The top elevation of Post Nos.T2 through T7 shall not project more than 1" above the top elevation of the rail element.
6. Typically, the railing connected to Transition Railing (Type WB) will be either standard railing section of metal beam guard railing or an approved Caltrans end treatment attached to Post No.T1.
7. The depth of the metal box spacer varies from the 5 1/8 " to 1 1/2 " and is dependent on the width of the concrete railing or wall. The combined dimension for the depth of the metal box spacer plus the width of railing or wall is typically 17 1/8 ". Where the space between the backside of the concrete railing or wall and the rear thrie beam element is less than 1 1/2 ", metal plates similar to Plate 'A' are to be used as spacers.
8. Where the width of the concrete railing or wall is greater than 17 1/8 ", wood blocks are to be used to fill the space created between the backside of Posts No.4 through No.7 and the rear thrie beam element. These wood blocks shall be 8" in width and 1'-2" in length. The dimension between the front thrie beam element and the rear thrie beam element is to match the width of the concrete railing or wall.
9. End cap may be installed over 12 gage and 10 gage thrie beam elements where transition railing is installed on the departure end of bridge railing.

STATE OF CALIFORNIA
DEPARTMENT OF TRANSPORTATION

# METAL BEAM GUARD RAILING TRANSITION RAILING (TYPE WB)

NO SCALE

RSP A77J4 DATED JUNE 5, 2009 SUPERSEDES RSP A77J4 DATED JUNE 6, 2008 AND STANDARD PLAN A77J4 DATED MAY 1, 2006 - PAGE 75 OF THE STANDARD PLANS BOOK DATED MAY 2006.

**REVISED STANDARD PLAN RSP A77J4**

**2006 REVISED STANDARD PLAN RSP A77J4**

5-14-09

| DIST | COUNTY | ROUTE | POST MILES TOTAL PROJECT | SHEET NO. | TOTAL SHEETS |
|---|---|---|---|---|---|
| 01 | Lak | 53 | 2.8/7.5 | 187 | 217 |

REGISTERED CIVIL ENGINEER

June 5, 2009
PLANS APPROVAL DATE

REGISTERED PROFESSIONAL ENGINEER Glenn DeCou No. C34547 Exp. 9-30-09 CIVIL STATE OF CALIFORNIA

*The State of California or its officers or agents shall not be responsible for the accuracy or completeness of electronic copies of this plan sheet.*

*To accompany plans dated* 6-1-10

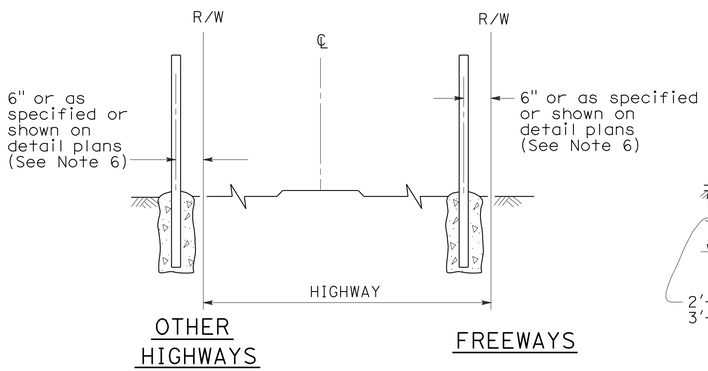


## FENCE LOCATION

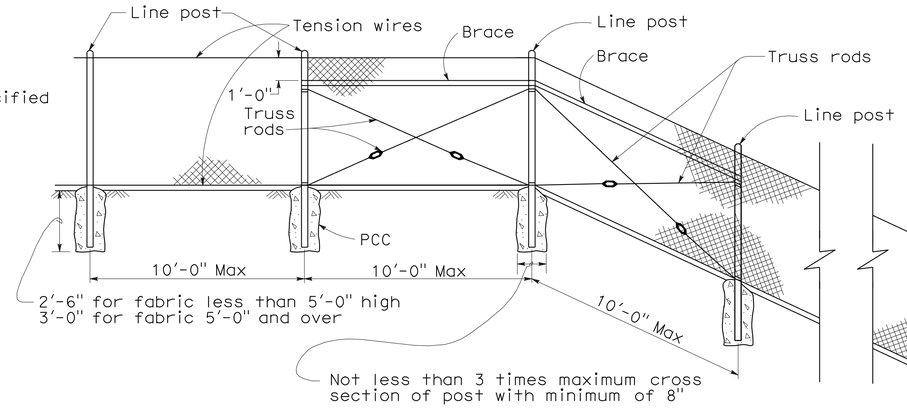


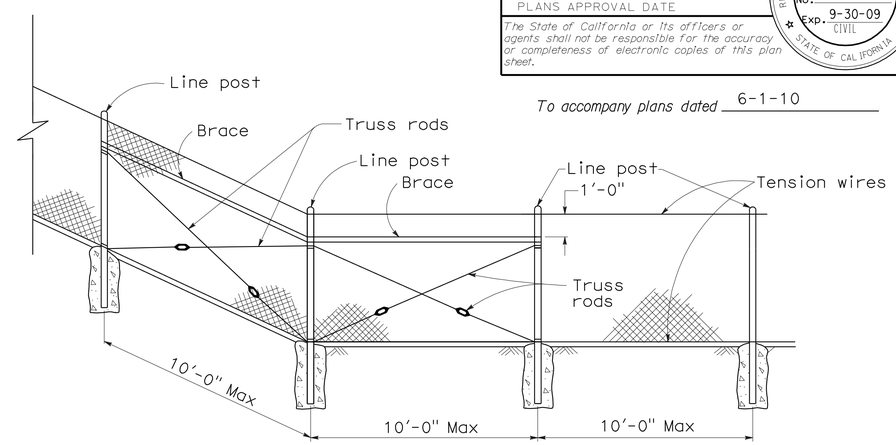


## CHAIN LINK FENCE ON SHARP BREAK IN GRADE

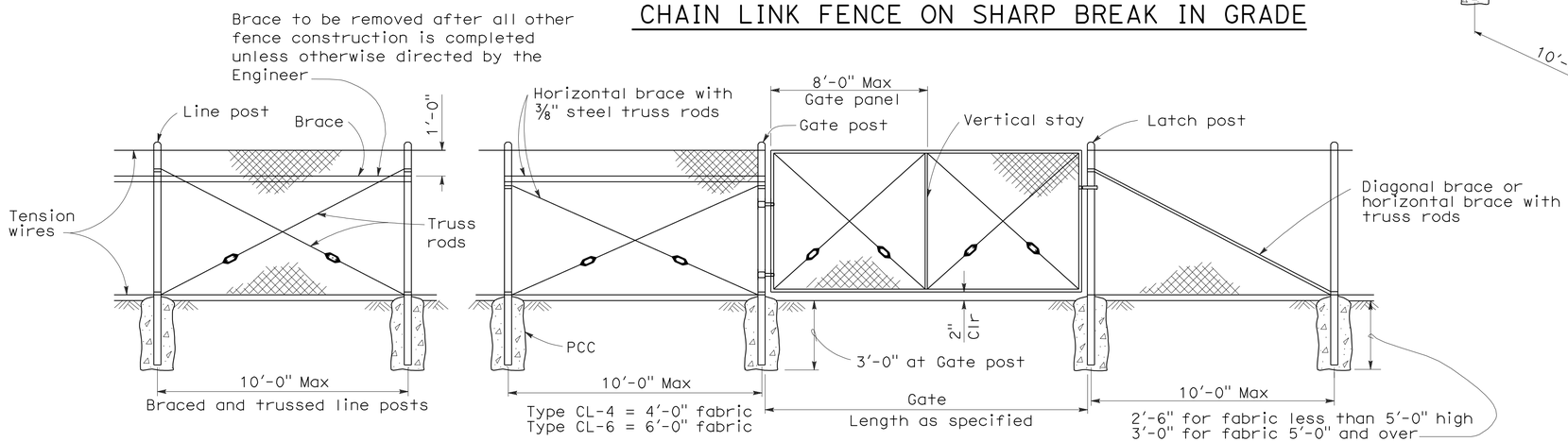


## CHAIN LINK GATE INSTALLATION

| GATE POST | | | |
|---|---|---|---|
| FENCE HEIGHT | GATE WIDTHS | NOMINAL ID | WEIGHT PER FOOT |
| 6'-0" and Less | Up thru 6'-0" | 2½" | 4.95 LB |
| | Over 6'-0" thru 12'-0" | 4" | 10.79 LB |
| | Over 12'-0" thru 18'-0" | 5" | 14.62 LB |
| | Over 18'-0" to 24'-0" Max | 6" | 18.97 LB |
| Over 6'-0" | Up thru 6'-0" | 3" | 7.58 LB |
| | Over 6'-0" thru 12'-0" | 5" | 14.62 LB |
| | Over 12'-0" thru 18'-0" | 6" | 18.97 LB |
| | Over 18'-0" to 24'-0" Max | 8" | 28.55 LB |

Above post dimensions and weights are minimums. Larger sizes may be used on approval of the Engineer.

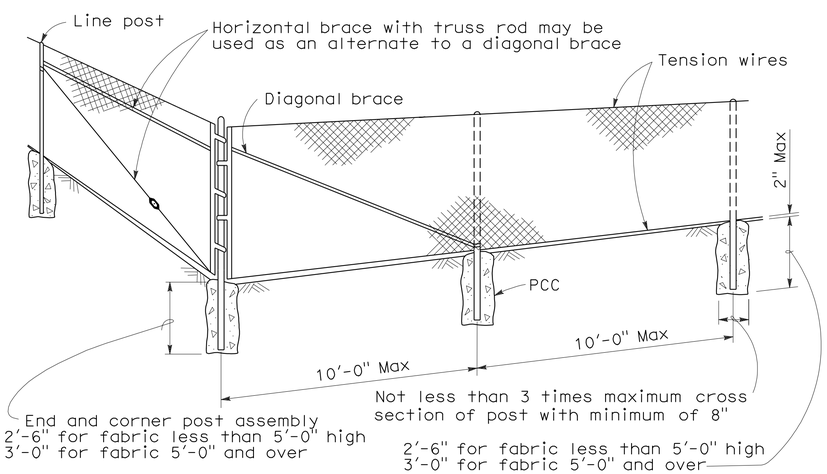


## CORNER POST

## NOTES:

1. The below table shows examples of post and brace sections which may comply with the Specifications.
2. Sections shown in the tables must also comply with the strength requirements and other provisions of the Specifications.
3. Other sections which comply with the strength requirements and other provisions of the Specifications may be used on approval of the Engineer.
4. Options exercised shall be uniform on any one project.
5. Dimensions shown are nominal.
6. Offset to be 2'-0" at monument locations, measured at right angles to R/W lines. Taper to achieve offset to be at least 20'-0" long.

| TYPICAL MEMBER DIMENSIONS (See Notes) | | | | | | | | | | | |
|---|---|---|---|---|---|---|---|---|---|---|---|
| FENCE HEIGHT | LINE POSTS | | | END, LATCH & CORNER POSTS | | | | BRACES | | | |
| | ROUND ID | H | ROLL FORMED | ROUND ID | ROLL FORMED | | | ROUND ID | H | ROLL FORMED | |
| | | | | | | | | | | | |
| 6' & less | 1½" | 1⅞" × 1⅝" | 1⅞" × 1⅝" | 2" | 3½" × 3½" | 2" × 1¾" | | 1¼" | 1½" × 1 5/16" | 1⅝" × 1¼" | 1¾" × 1¼" |
| Over 6' | 2" | 2¼" × 2" | 2" × 1¾" | 2½" | 3½" × 3½" | 2½" × 2½" | | 1¼" | 1½" × 1 5/16" | 1⅝" × 1¼" | 1¾" × 1¼" |

STATE OF CALIFORNIA
DEPARTMENT OF TRANSPORTATION

# CHAIN LINK FENCE

NO SCALE

RSP A85 DATED JUNE 5, 2009 SUPERSEDES STANDARD PLAN A85
DATED MAY 1, 2006 - PAGE 111 OF THE STANDARD PLANS BOOK DATED MAY 2006.

**REVISED STANDARD PLAN RSP A85**

**2006 REVISED STANDARD PLAN RSP A85**

5-7-09

| DIST | COUNTY | ROUTE | POST MILES TOTAL PROJECT | SHEET NO. | TOTAL SHEETS |
|---|---|---|---|---|---|
| 01 | Lak | 53 | 2.8/7.5 | 188 | 217 |

Glenn DeCou
REGISTERED CIVIL ENGINEER

June 5, 2009
PLANS APPROVAL DATE

REGISTERED PROFESSIONAL ENGINEER
Glenn DeCou
No. C34547
Exp. 9-30-09
CIVIL
STATE OF CALIFORNIA

*The State of California or its officers or agents shall not be responsible for the accuracy or completeness of electronic copies of this plan sheet.*

*To accompany plans dated* 6-1-10

## NOTES:

1. H is 2'-6" for fabric less than 5'-0" high.
   H is 3'-0" for fabric 5'-0" and over.
2. T is not less than 3 times maximum cross section of post with minimum of 8".
3. Arms with barbed wire to be used where shown on plans.
4. See Revised Standard Plan RSP A85 for Chain Link Fencing dimensions.
5. Reinforcing must comply with ASTM A 706.
6. See Detail A on New Standard Plan NSP A86B for connection at headwall.

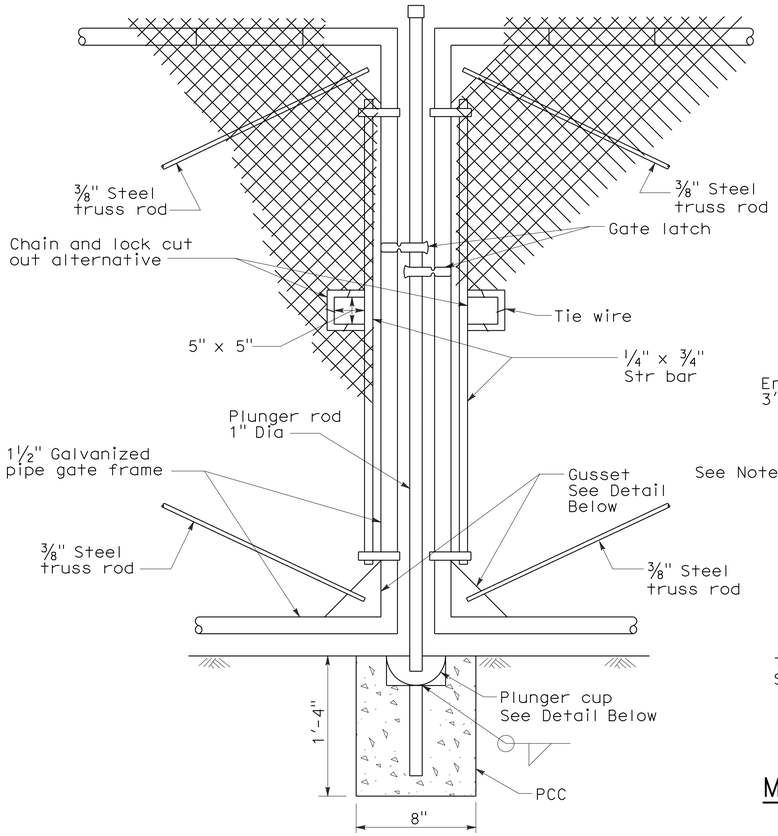


TYPICAL DOUBLE GATE
REMOVABLE CENTER POST

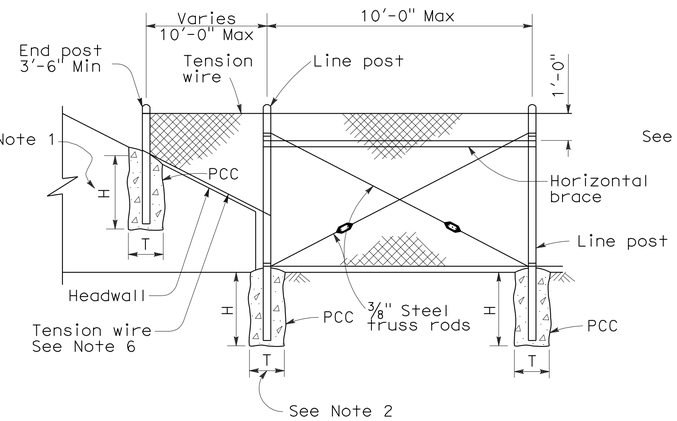


METHOD OF TYING FENCE TO HEADWALL

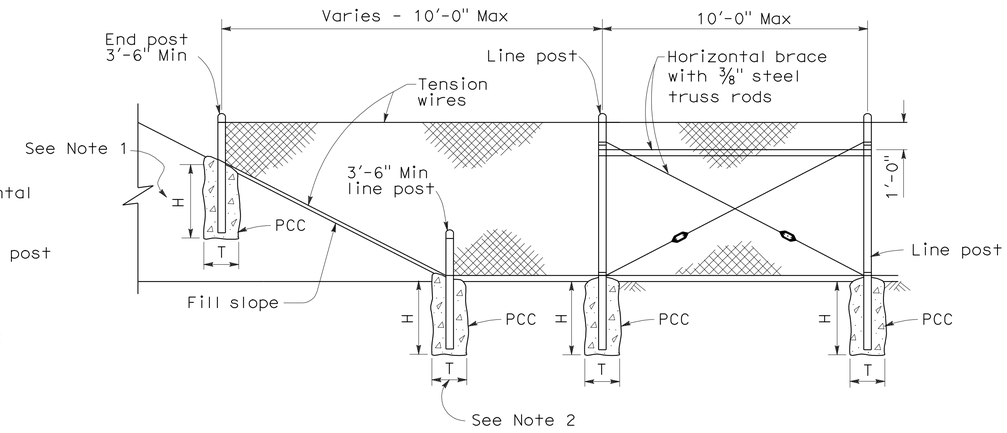


METHOD OF ERECTING FENCE FOR FILL SLOPE

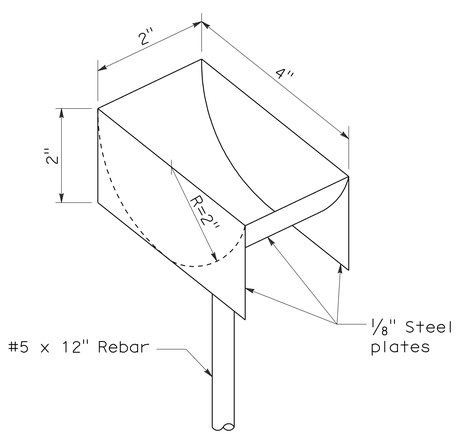


PLUNGER CUP DETAIL

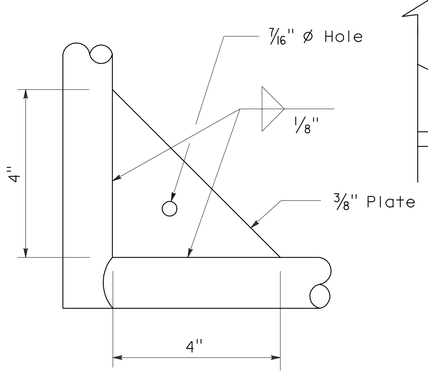


GUSSET DETAIL

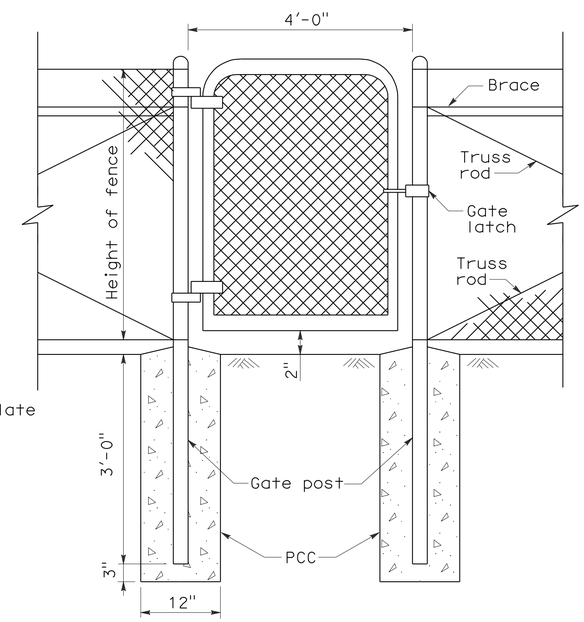


WALK GATE

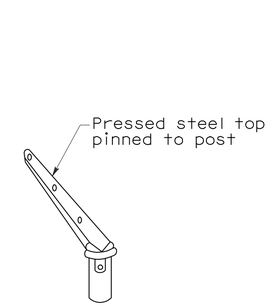


POST TOP END

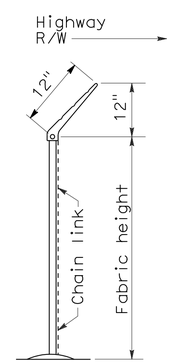


END ELEVATION

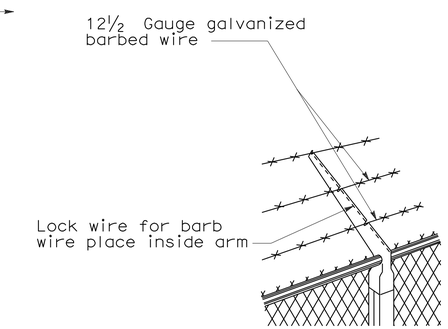


LINE POST TOP
Vertical arms when desired

BARBED WIRE POST TOP
See Note 3

STATE OF CALIFORNIA
DEPARTMENT OF TRANSPORTATION

# CHAIN LINK FENCE DETAILS

NO SCALE

NSP A85A DATED JUNE 5, 2009 SUPPLEMENTS THE STANDARD PLANS BOOK DATED MAY 2006.

**NEW STANDARD PLAN NSP A85A**

**2006 NEW STANDARD PLAN NSP A85A**

5-7-09

| DIST | COUNTY | ROUTE | POST MILES TOTAL PROJECT | SHEET NO. | TOTAL SHEETS |
|---|---|---|---|---|---|
| 01 | Lak | 53 | 2.8/7.5 | 189 | 217 |

Glenn DeCou
REGISTERED CIVIL ENGINEER

June 5, 2009
PLANS APPROVAL DATE

REGISTERED PROFESSIONAL ENGINEER
Glenn DeCou
No. C34547
Exp. 9-30-09
CIVIL
STATE OF CALIFORNIA

*The State of California or its officers or agents shall not be responsible for the accuracy or completeness of electronic copies of this plan sheet.*

*To accompany plans dated* 6-1-10

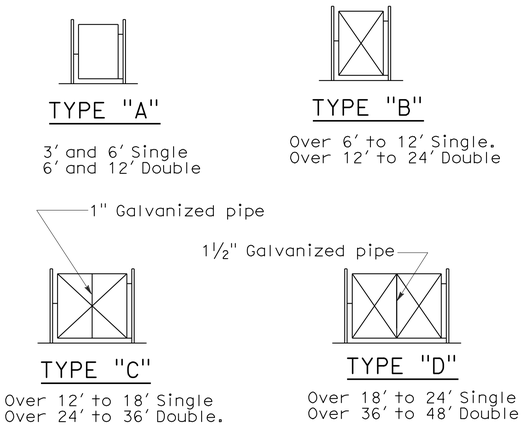


TYPICAL FRAMEWORK SHOWING NUMBER OF BAYS IN GATE

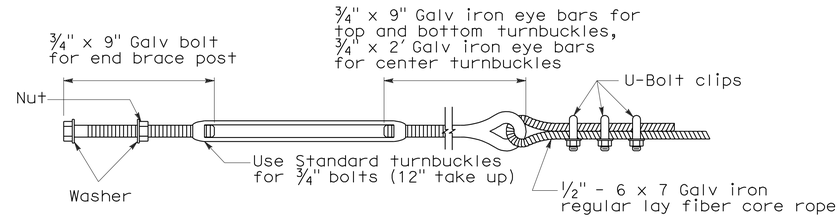


TURNBUCKLE A

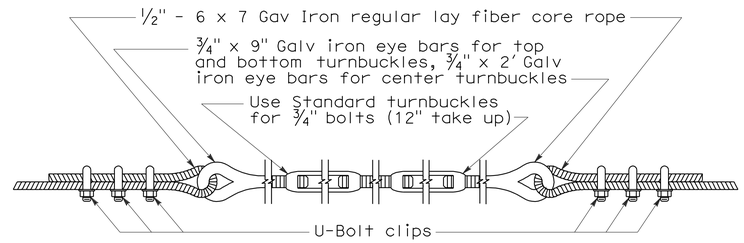


TURNBUCKLE B

## NOTES:

1. All material for abutment connection to be galvanized.
2. The chain link fabric shall be replaced by barbed wire strands at 12" maximum centers between the double posts.
3. When the width of the culvert makes it necessary to anchor a post to the top of the culvert, a cast iron shoe or other device approved by the Engineer shall be used.
4. Fencing over stream and around headwall may also use Barbed Wire or Wire Mesh fencing with either wood post or steel post installation.
5. See Revised Standard Plan RSP A85 for Chain Link fence dimensions. See Standard Plan A86 for Barbed Wire and Wire Mesh fence dimensions and for wood post and steel post installation.

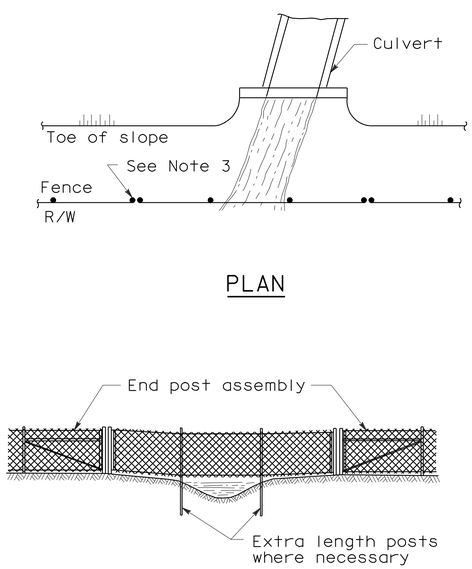


PLAN

ELEVATION

INSTALLATION OVER STREAM

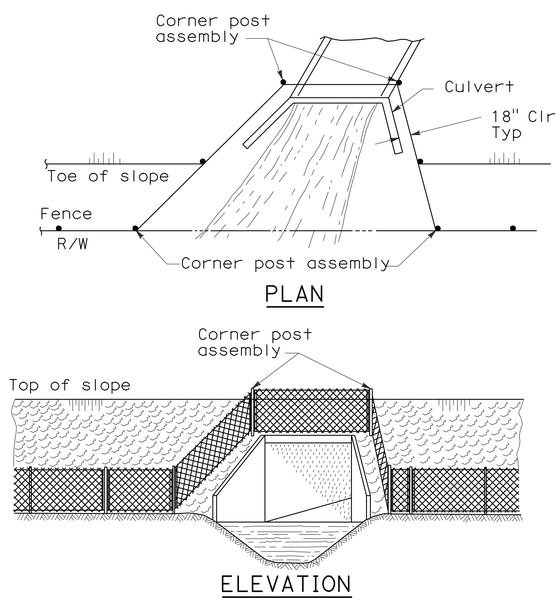


PLAN

ELEVATION

INSTALLATION AROUND HEADWALL

See Note 4

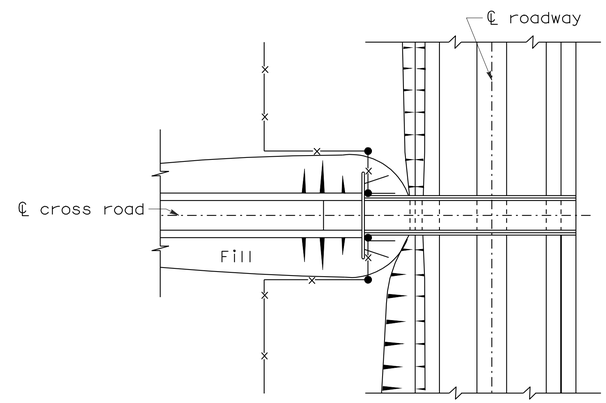


PLAN OF ROADWAY - UNDERPASS

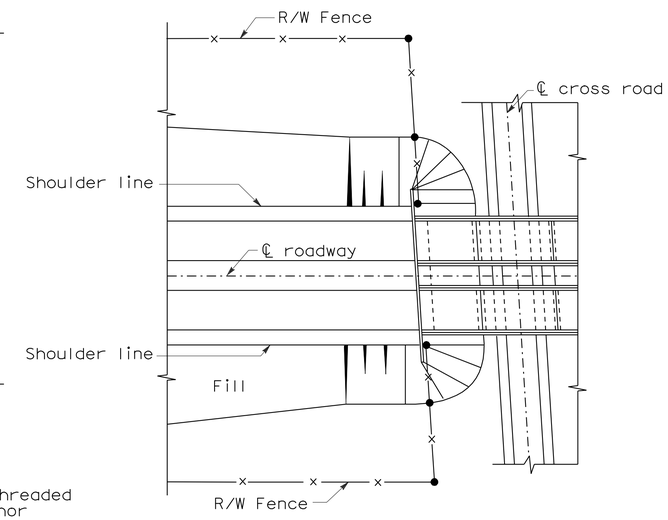


PLAN OF ROADWAY - OVERPASS

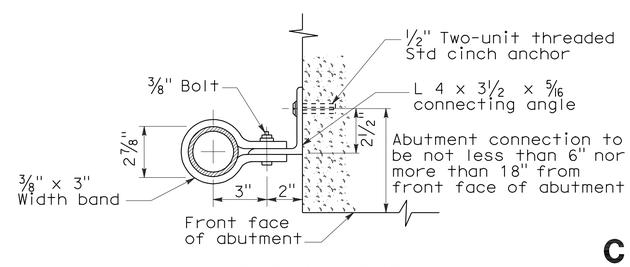


ABUTMENT CONNECTION

TYPICAL INSTALLATION AT BRIDGES

STATE OF CALIFORNIA
DEPARTMENT OF TRANSPORTATION

# CHAIN LINK FENCE DETAILS

NO SCALE

NSP A85B DATED JUNE 5, 2009 SUPPLEMENTS THE STANDARD PLANS BOOK DATED MAY 2006.

**NEW STANDARD PLAN NSP A85B**

**2006 NEW STANDARD PLAN NSP A85B**

5-12-09

| DIST | COUNTY | ROUTE | POST MILES TOTAL PROJECT | SHEET NO. | TOTAL SHEETS |
|---|---|---|---|---|---|
| 01 | Lak | 53 | 2.8/7.5 | 190 | 217 |

REGISTERED CIVIL ENGINEER

June 15, 2007
PLANS APPROVAL DATE

REGISTERED PROFESSIONAL ENGINEER Glenn DeCou No. C34547 Exp. 9-30-07 CIVIL STATE OF CALIFORNIA

*The State of California or its officers or agents shall not be responsible for the accuracy or completeness of electronic copies of this plan sheet.*

*To accompany plans dated* 6-1-10

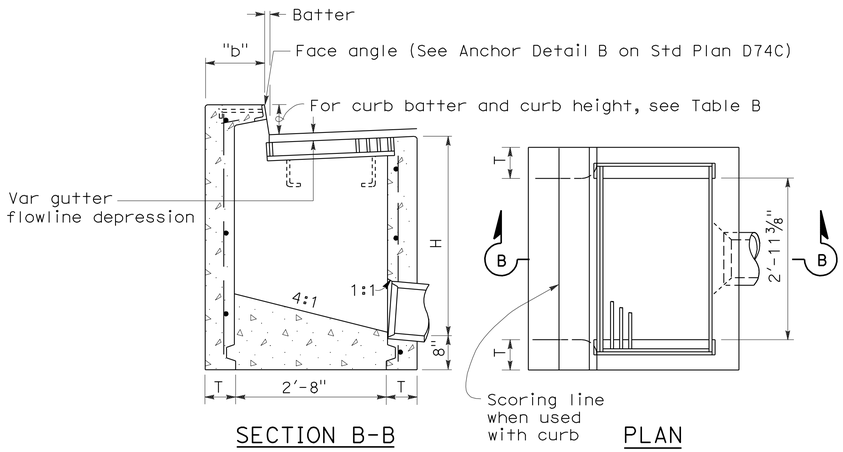


SECTION B-B PLAN

TYPE GO

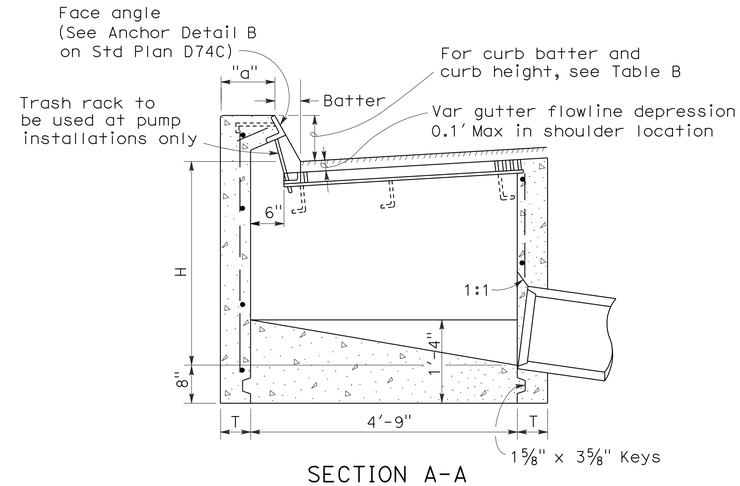


SECTION A-A

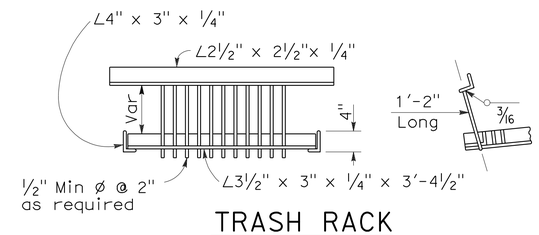


TRASH RACK

(For use with pump installation)

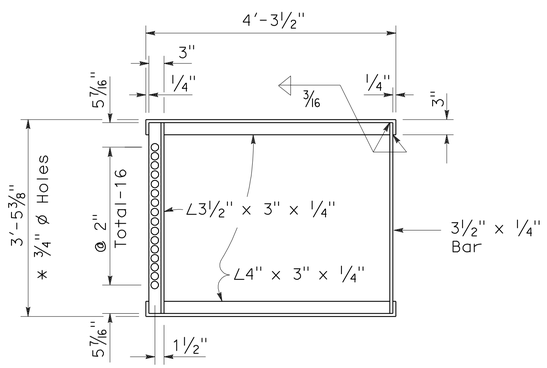


* 3/4" ø Holes required only with trash rack

GRATE FRAME FOR TYPE GDO INLET

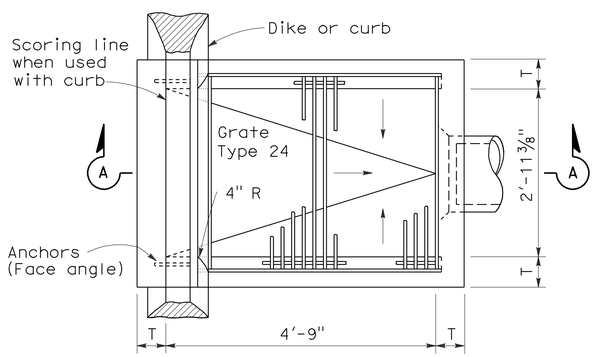


PLAN

TYPE GDO

TABLE A

| CONCRETE QUANTITIES | | | | |
|---|---|---|---|---|
| TYPE | H=3'-0" TO 8'-0" (T=6") | | H=8'-1" TO 20'-0" (T=8") | |
| | H=3'-0" (CY) | ADDITIONAL PCC PER FOOT (CY) | H=8'-1" (CY) | ADDITIONAL PCC PER FOOT (CY) |
| GO | 1.24 | 0.245 | 3.39 | 0.346 |
| GDO | 1.62 | 0.322 | 4.36 | 0.446 |

Table based on 8" floor slab, no deduction for pipe openings, and curb type giving highest quantity of concrete. No deductions or adjustments are to be made to these quantities because of pipe openings, different floor alternatives or different curb type.

TABLE B

| CURB TYPE | NORMAL CURB HEIGHT | CURB BATTER | "a" DIMENSION | "b" DIMENSION |
|---|---|---|---|---|
| A1-6 | 6" | 1 1/2" | T+7 1/2" | T+6 1/2" |
| A1-8 | 8" | 2" | T+7" | T+6" |
| B1-6 | 6" | 4" | T+5" | T+4" |
| Type A Dike | 6" | 3" | T+6" | T+5" |

## NOTES:

1. "H" is the difference in elevation between the outlet pipe flow line and the normal gutter grade line undepressed.
2. For "T" wall thickness, see Table A below.
3. Wall reinforcing not required when "H" is 8'-0" or less and the unsupported width or length is 7'-0" or less. Walls exceeding these limits shall be reinforced with #4 @ 18"± centers placed 1 1/2" clear to inside of box unless otherwise shown.
4. Inlet bottom reinforcing not required. See Standard Plan D74C for alternative reinforced bottom.
5. Steps - None required where "H" is less than 2'-6" Where "H" is 2'-6" or more, install steps with lowest rung 1'-0" above the floor and highest rung not more than 6" below top of inlet. The distance between steps shall not exceed 1'-0" and shall be uniform throughout the length of the wall. Place steps in the wall without an opening. Step inserts may be substituted for the bar steps. Step Inserts shall comply with State Industrial Safety requirements. See Standard Plan D74C for step details.
6. When shown on the project plans, place a 3/4" plain round protection bar horizontally across the length of the opening and bend back 4" into the inlet wall on each side.
7. Pipe(s) can be placed in any wall.
8. Curb section shall match adjacent curb.
9. Basin floors shall have wood trowel finish and shall slope toward the outlet pipe as shown.
10. Galvanizing - See Standard Specifications or Special Provisions.
11. See Standard Plan D77A and D77B for grate and frame details and weights of miscellaneous iron and Steel.
12. See Standard Plan D78A for gutter depression details.
13. Full penetration butt welds may be substituted for the fillet welds on all anchors.
14. Standard square, hexagon, round or equivalent headed anchors may be substituted for the right angle hooks on the anchors shown on this plan.
15. Cast-in-place or precast alternative is optional with contractor. See Standard Specifications.
16. Cast-in-place inlets to be formed around all pipes/stubs intersecing the inlet and concrete poured in one continuous operation. Precast inlets shall have mortared pipe connections conforming to details for Type GCP inlets on Standard Plan D75B. See Standard Specifications for mortar composition.

STATE OF CALIFORNIA
DEPARTMENT OF TRANSPORTATION

# DRAINAGE INLETS

NO SCALE

RSP D74B DATED JUNE 15, 2007 SUPERSEDES STANDARD PLAN D74B DATED MAY 1, 2006 - PAGE 150 OF THE STANDARD PLANS BOOK DATED MAY 2006.

**REVISED STANDARD PLAN RSP D74B**

**2006 REVISED STANDARD PLAN RSP D74B**

4-16-07

| DIST | COUNTY | ROUTE | POST MILES TOTAL PROJECT | SHEET NO. | TOTAL SHEETS |
|---|---|---|---|---|---|
| 01 | Lak | 53 | 2.8/7.5 | 191 | 217 |

Raymond Don Tsztoo
REGISTERED CIVIL ENGINEER

January 18, 2008
PLANS APPROVAL DATE

REGISTERED PROFESSIONAL ENGINEER
Raymond Don Tsztoo
No. C37332
Exp. 6-30-08
CIVIL
STATE OF CALIFORNIA

*The State of California or its officers or agents shall not be responsible for the accuracy or completeness of electronic copies of this plan sheet.*

*To accompany plans dated* 6-1-10

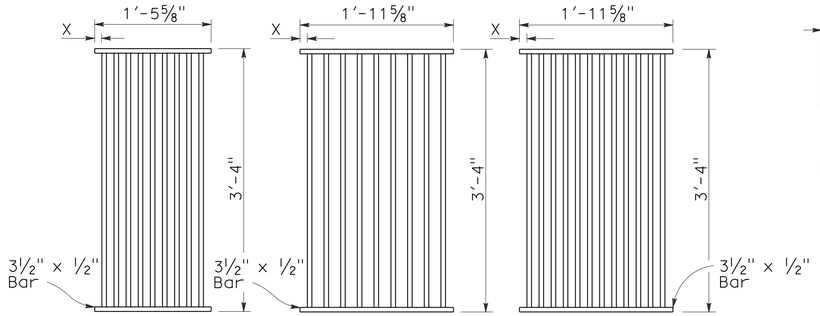


## TYPE 18-9

1⅜" Clear spacing. Use within the roadbed on highways where bicycles and pedestrians are excluded.

## TYPE 24-9

2" Clear spacing. Use in locations off the roadbed on all types of highways.

## TYPE 24-12

1⅜" Clear spacing. Use within the roadbed on highways where bicycles and pedestrians are excluded.

## RECTANGULAR GRATE DETAILS

(See table below)

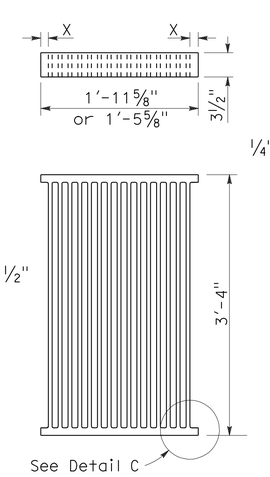


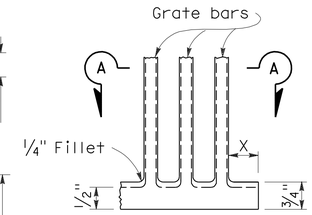


## DETAIL C

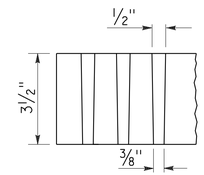


## SECTION A-A

## ALTERNATIVE CAST NODULAR IRON GRATE OR CAST STEEL GRATE

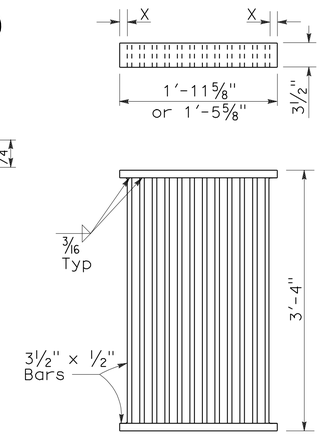


## ALTERNATIVE WELDED GRATE

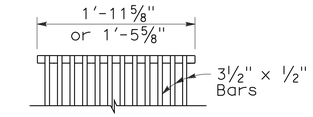


## CAST END BLOCK

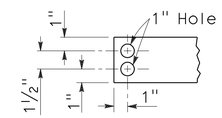


## END OF BAR

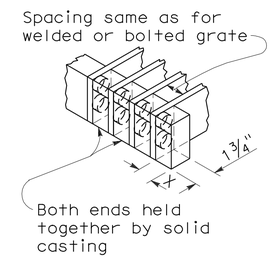


## ALTERNATIVE CAST NODULAR IRON OR CAST STEEL END BLOCK GRATE

## NOTES:

1. Grate type numbers refer to approximate width of grate in inches and number of bars, respectively.
2. Contractor has the option of using cast nodular iron, cast steel, welded, bolted, or cast end block grate.
3. See Special Provisions for requirements pertaining to galvanizing or asphalt dipping of grates and frames.
4. Rounded top of bars optional on all grates.
5. Pipe inlets with a grate shall be placed so that bars parallel direction of principle surface flow.
6. Full penetration butt welds may be substituted for the fillet welds on all anchors.
7. Standard square, hexagon, round or equivalent headed anchors may be substituted for the right angle hooks on the anchors shown on this plan.
8. Grate and frame weights are based on welded grates (weights of face angles, steps, protection bars, etc. are not included).

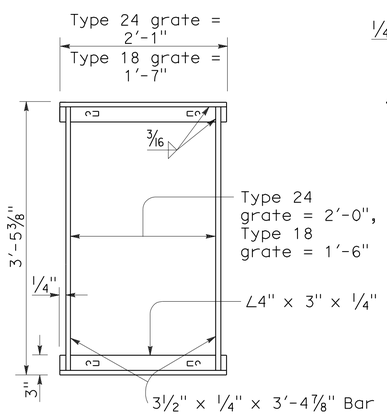


## TYPICAL FRAME

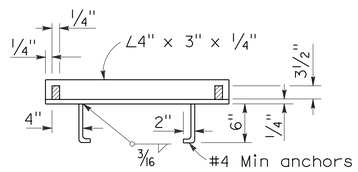


## CROSS SECTION

(Thru frame)

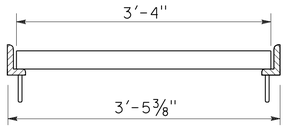


## LONGITUDINAL SECTION

(Thru frame and grate)

## RECTANGULAR FRAME DETAILS

(For all rectangular grates)

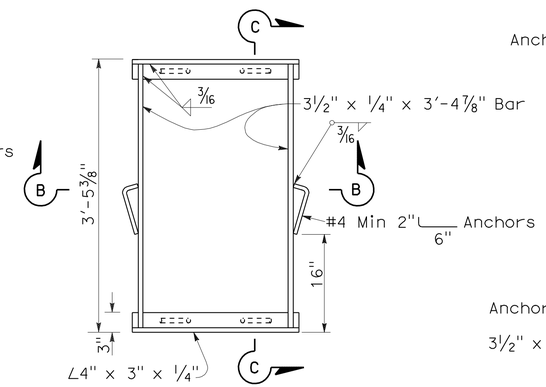


## TYPICAL FRAME

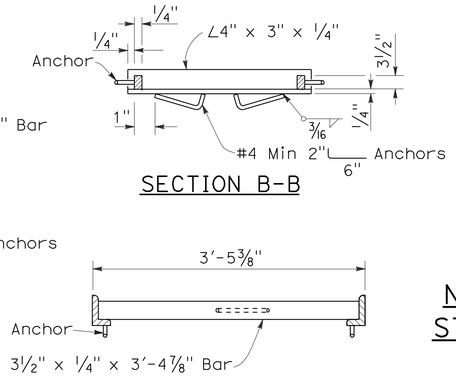


## SECTION B-B

## SECTION C-C

## ALTERNATIVE ANCHOR FOR RECTANGULAR FRAME

(For details not shown, See Rectangular Frame Details)

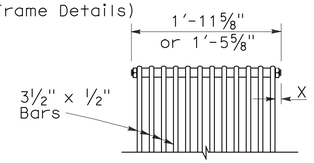


## BOLTED END BLOCK

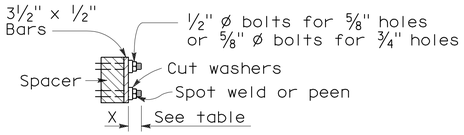


## BOLTING DETAIL

## ALTERNATIVE BOLTED GRATE

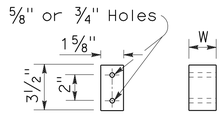


## BAR SPACER

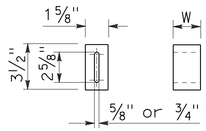


## ALTERNATIVE SPACER

W = 1⅜" or 2"

### GRATE BAR SPACING TABLE

| TYPE | No. OF BARS | CLEAR BAR SPACING | X |
|---|---|---|---|
| 18-9 | 9 | 1⅜" | 1 1/16" |
| 24-9 | 9 | 2" | 1 9/16" |
| 24-12 | 12 | 1⅜" | 1¼" |

| INLET TYPE | COVER TYPE | WEIGHT LB |
|---|---|---|
| OS | PLATE | 174 |
| OL-7 | PLATE | 170 |
| OL-10 | PLATE | 170 |
| OL-14 | PLATE | 170 |
| OL-21 | PLATE | 170 |
| OCP | PLATE | 112 |
| OCPI | PLATE | 112 |
| OCPI | REDWOOD | 42 |
| OMP | PLATE | 177 |
| OMPI | PLATE | 177 |

| INLET TYPE | GRATE TYPE | No. OF GRATES | WEIGHT LB |
|---|---|---|---|
| GDO | 24-12 | 2 | 634 |
| | | | |
| GOL-7 | 24-12 | 1 | 326 |
| | | | |
| GOL-10 | 24-12 | 1 | 326 |
| | | | |
| GO,G1,G2,G3,G4 (TYPE 24) | 24-9 | 1 | 263 |
| | 24-12 | 1 | 326 |
| | | | |
| G4 (TYPE 18),G5,G6 | 18-9 | 1 | 249 |
| GT1 | 18-9 | 2 | 498 |
| GT2 | 18-9 | 2 | 498 |
| GT3 | 24-12 | 2 | 652 |
| | | | |
| GT4 | 24-12 | 2 | 652 |
| | | | |
| TRASH RACK | | | 22 |

## BASIS FOR MISC IRON & STEEL FINAL PAY WEIGHTS FOR DRAINAGE INLETS

(See General Notes, No 8)

STATE OF CALIFORNIA
DEPARTMENT OF TRANSPORTATION

# GRATE DETAILS

NO SCALE

RSP D77A DATED JANUARY 18, 2008 SUPERSEDES STANDARD PLAN D77A
DATED MAY 1, 2006 - PAGE 155 OF THE STANDARD PLANS BOOK DATED MAY 2006.

**REVISED STANDARD PLAN RSP D77A**

**2006 REVISED STANDARD PLAN RSP D77A**

12-14-07

| DIST | COUNTY | ROUTE | POST MILES TOTAL PROJECT | SHEET NO. | TOTAL SHEETS |
|---|---|---|---|---|---|
| 01 | Lak | 53 | 2.8/7.5 | 192 | 217 |

LICENSED LANDSCAPE ARCHITECT

April 3, 2009
PLANS APPROVAL DATE

*The State of California or its officers or agents shall not be responsible for the accuracy or completeness of electronic copies of this plan sheet.*

LICENSED LANDSCAPE ARCHITECT — Gregory A. Balzer — Signature — 02-28-11 Renewal Date — 03-04-09 Date — STATE OF CALIFORNIA

*To accompany plans dated* 6-1-10

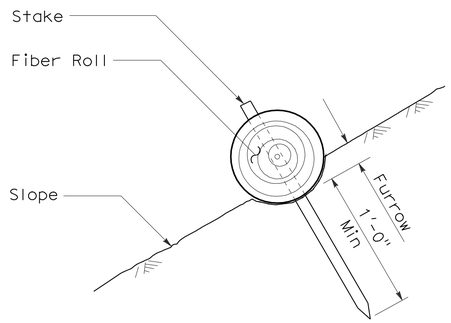


SECTION

FIBER ROLL (TYPE 1)

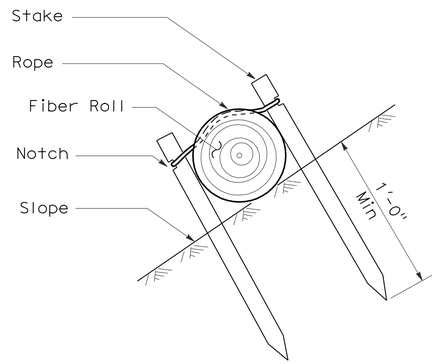


SECTION

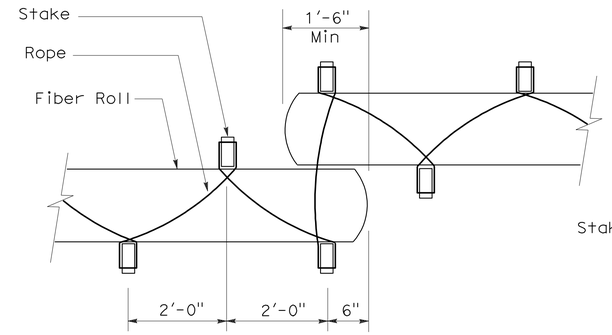


PLAN

FIBER ROLL (TYPE 2)

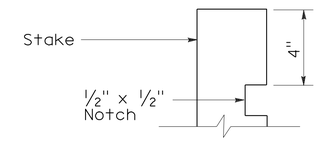


ELEVATION

STAKE NOTCH DETAIL

NOTES:

1. Fiber roll spacing varies depending upon slope inclination.
2. Installations shown in the perspectives are for slope inclination of 10:1 and steeper.

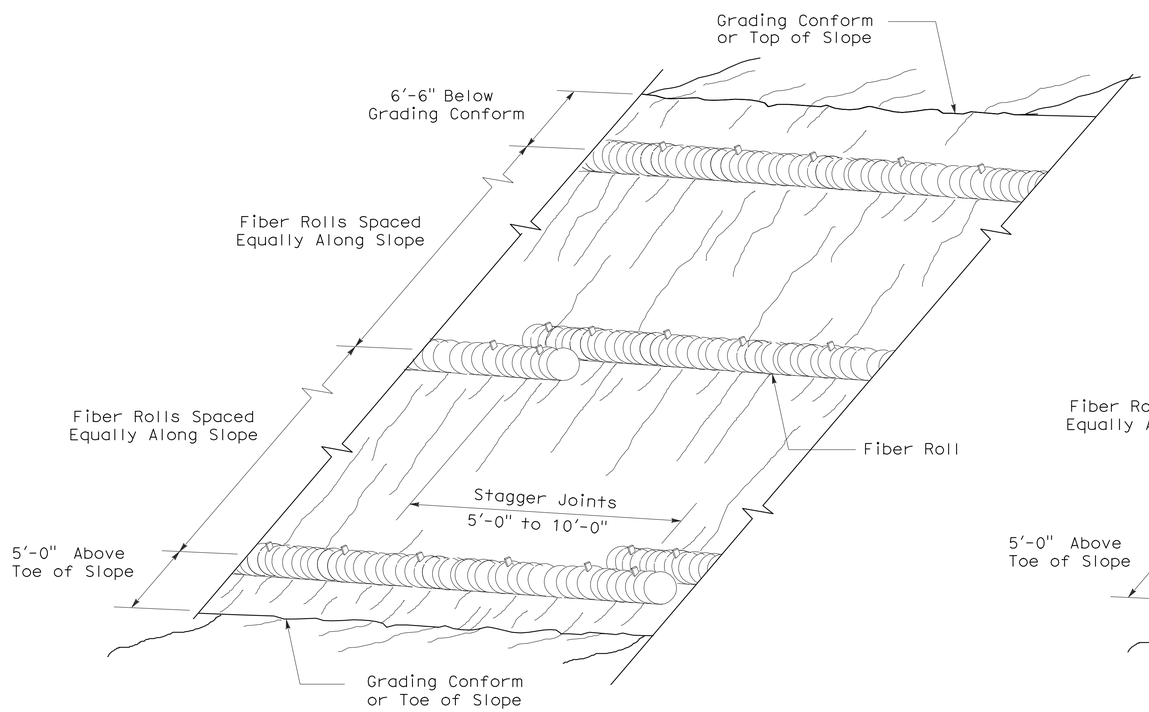


PERSPECTIVE

FIBER ROLL (TYPE 1)

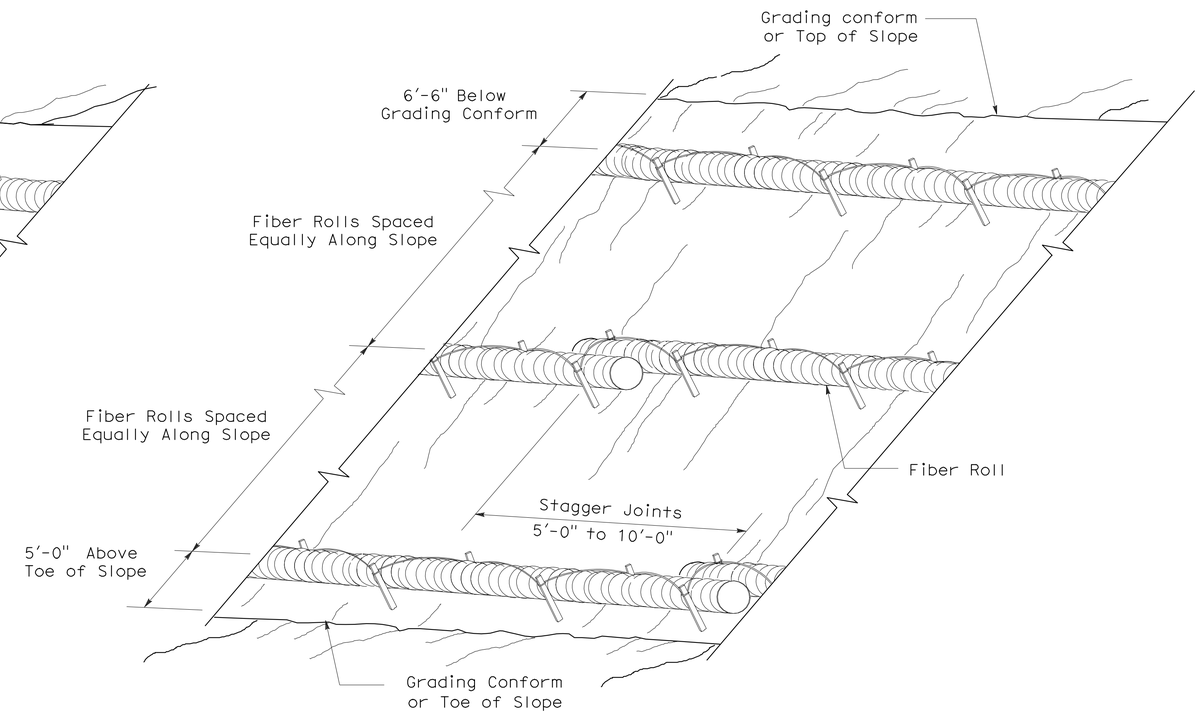


PERSPECTIVE

FIBER ROLL (TYPE 2)

STATE OF CALIFORNIA
DEPARTMENT OF TRANSPORTATION

# EROSION CONTROL DETAILS (FIBER ROLL)

NO SCALE

RNSP H51 DATED APRIL 3, 2009 SUPERSEDES NSP H51 DATED DECEMBER 1, 2006 THAT SUPPLEMENTS THE STANDARD PLANS BOOK DATED MAY 2006.

**REVISED NEW STANDARD PLAN RNSP H51**

**2006 REVISED NEW STANDARD PLAN RNSP H51**

3-4-09

| DIST | COUNTY | ROUTE | POST MILES TOTAL PROJECT | SHEET NO. | TOTAL SHEETS |
|---|---|---|---|---|---|
| 01 | Lak | 53 | 2.8/7.5 | 193 | 217 |

LICENSED LANDSCAPE ARCHITECT

June 5, 2009
PLANS APPROVAL DATE

*The State of California or its officers or agents shall not be responsible for the accuracy or completeness of electronic copies of this plan sheet.*

LICENSED LANDSCAPE ARCHITECT — Gregory A. Balzer — 6-9 Expiration — 2-28-11 Renewal Date — 5-14-09 Date — STATE OF CALIFORNIA

*To accompany plans dated* 6-1-10

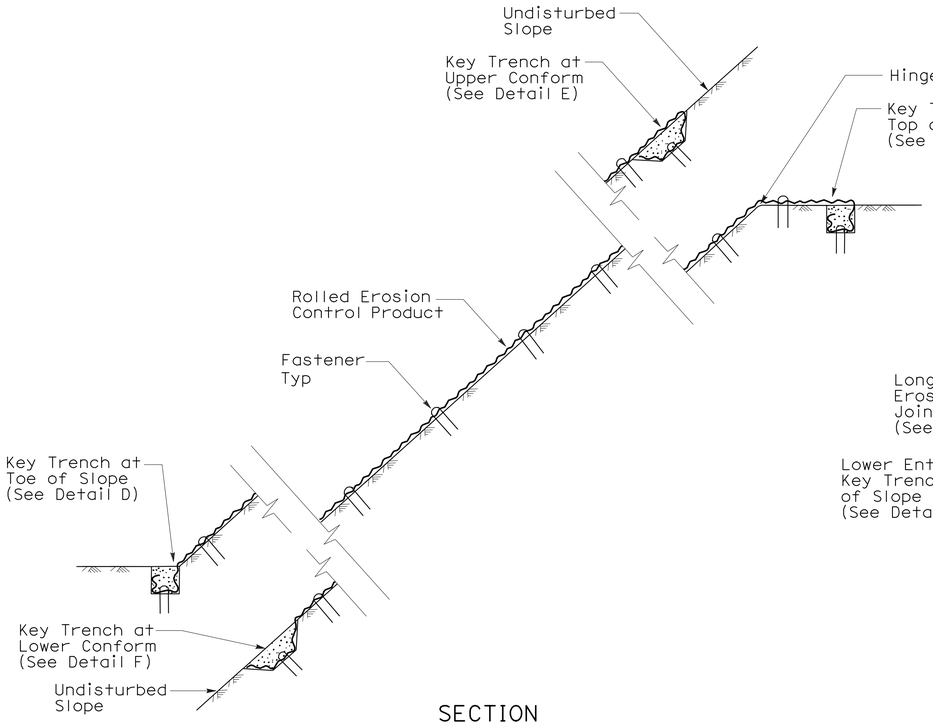


SECTION

ROLLED EROSION CONTROL PRODUCT ON SLOPE WITH VARIOUS KEY ENTRENCHMENTS

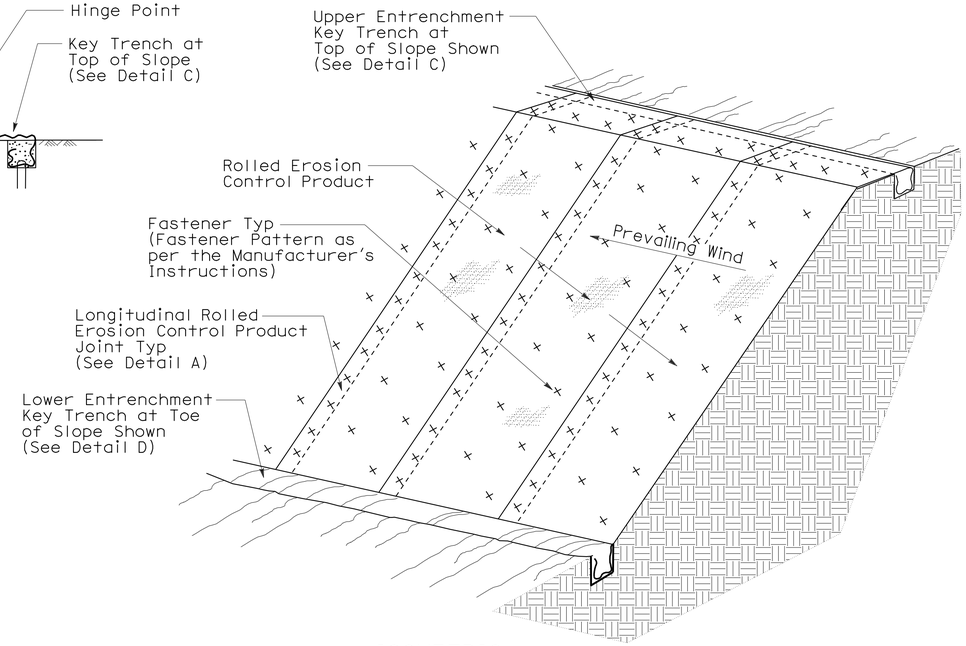


ISOMETRIC

ROLLED EROSION CONTROL PRODUCT ON SLOPE

NOTE:

1. Fiber Roll/Compost Sock shown for reference purposes only.
2. If transverse rolled erosion control product joints are required on slopes, see Detail B.

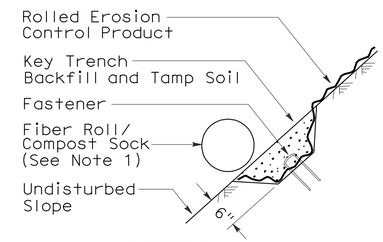


SECTION

DETAIL F
KEY TRENCH AT LOWER CONFORM

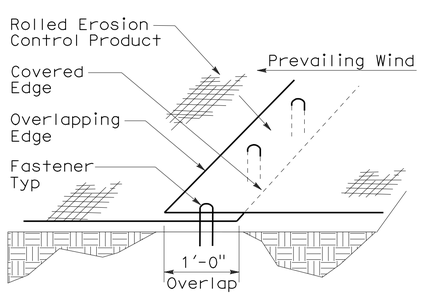


PERSPECTIVE

DETAIL A
LONGITUDINAL ROLLED EROSION CONTROL PRODUCT JOINT

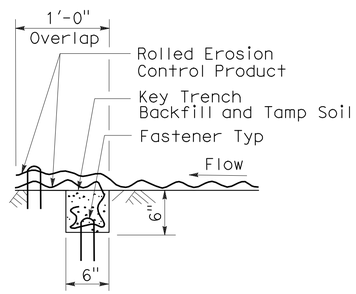


SECTION

DETAIL B
TRANSVERSE ROLLED EROSION CONTROL PRODUCT JOINT

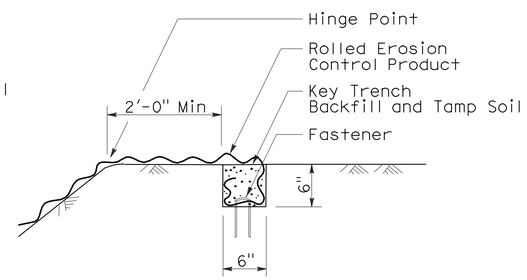


SECTION

DETAIL C
KEY TRENCH AT TOP OF SLOPE

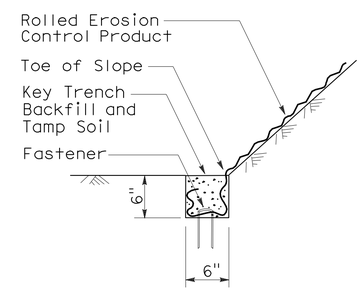


SECTION

DETAIL D
KEY TRENCH AT TOE OF SLOPE

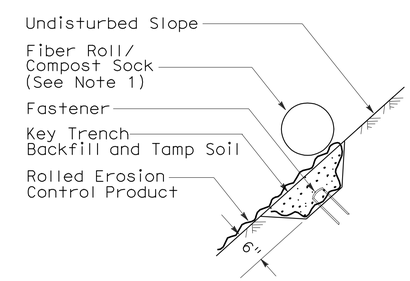


SECTION

DETAIL E
KEY TRENCH AT UPPER CONFORM

STATE OF CALIFORNIA
DEPARTMENT OF TRANSPORTATION

**ROLLED EROSION CONTROL PRODUCT**

NO SCALE

NSP H53 DATED JUNE 5, 2009 SUPPLEMENTS THE STANDARD PLANS BOOK DATED MAY 2006.

**NEW STANDARD PLAN NSP H53**

**2006 NEW STANDARD PLAN NSP H53**

3-4-09

| DIST | COUNTY | ROUTE | POST MILES TOTAL PROJECT | SHEET NO. | TOTAL SHEETS |
|---|---|---|---|---|---|
| 01 | Lak | 53 | 2.8/7.5 | 194 | 217 |

Randell D. Hiatt
REGISTERED CIVIL ENGINEER

June 6, 2008
PLANS APPROVAL DATE

REGISTERED PROFESSIONAL ENGINEER
Randell D. Hiatt
No. C50200
Exp. 6-30-09
CIVIL
STATE OF CALIFORNIA

*The State of California or its officers or agents shall not be responsible for the accuracy or completeness of electronic copies of this plan sheet.*

*To accompany plans dated* 6-1-10

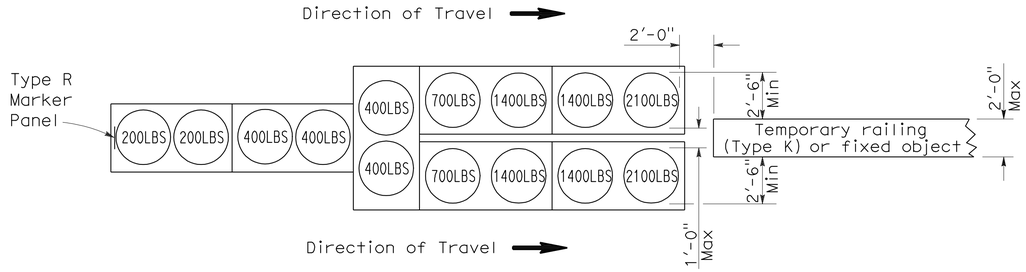


## ARRAY 'TU14'

Approach speed 45 mph or more

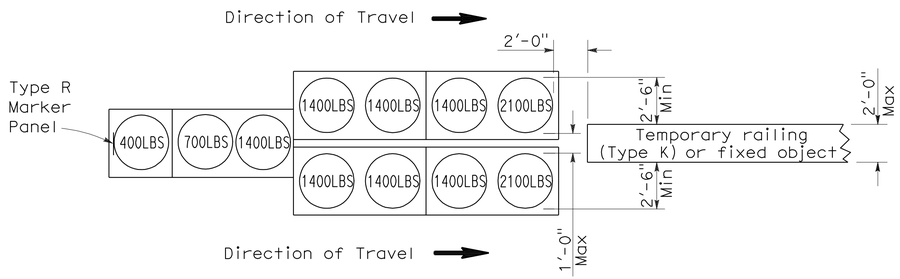


## ARRAY 'TU11'

Approach speed less than 45 mph

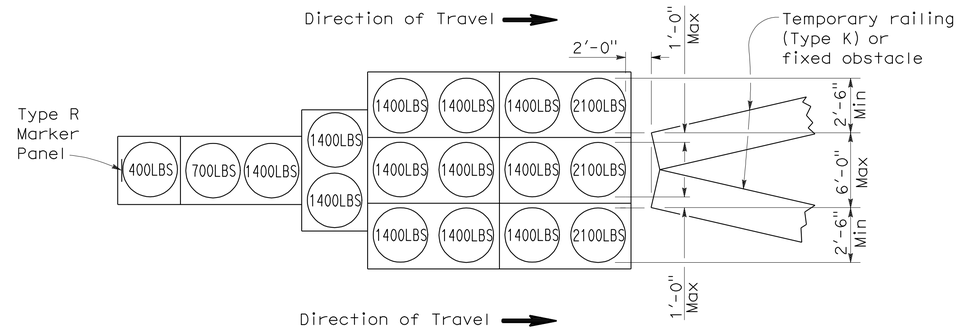


## ARRAY 'TU17'

Approach speed less than 45 mph

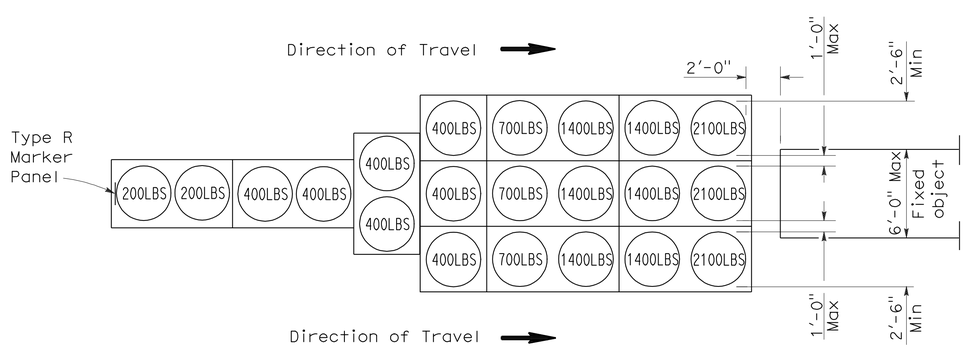


## ARRAY 'TU21'

Approach speed 45 mph or more

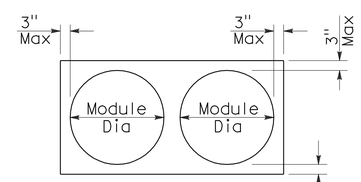


PLAN

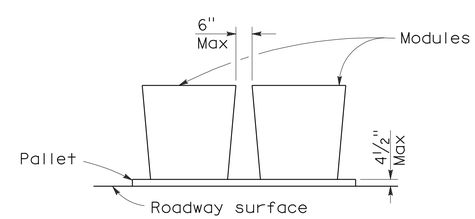


ELEVATION

## CRASH CUSHION PALLET DETAIL

See Note 7

## NOTES:

1. (XXX) Indicates sand filled module location and weight of sand in pounds for each module. Module spacing is based on the greater diameter of the module.
2. All sand weights are nominal.
3. Temporary crash cushion arrays shall not encroach on the traveled way.
4. Place the top of Type R marker panel 1" below the module lid.
5. Refer to Standard Plan A73B for marker details.
6. Approach speeds indicated conform to NCHRP 350 Report criteria.
7. Use of pallets is optional.

STATE OF CALIFORNIA
DEPARTMENT OF TRANSPORTATION

# TEMPORARY CRASH CUSHION, SAND FILLED (UNIDIRECTIONAL)

NO SCALE

RSP T1A DATED JUNE 6, 2008 SUPERSEDES STANDARD PLAN T1A
DATED MAY 1, 2006 - PAGE 211 OF THE STANDARD PLANS BOOK DATED MAY 2006.

**REVISED STANDARD PLAN RSP T1A**

**2006 REVISED STANDARD PLAN RSP T1A**

| DIST | COUNTY | ROUTE | POST MILES TOTAL PROJECT | SHEET NO. | TOTAL SHEETS |
|---|---|---|---|---|---|
| 01 | Lak | 53 | 2.8/7.5 | 195 | 217 |

Randell D. Hiatt
REGISTERED CIVIL ENGINEER

June 6, 2008
PLANS APPROVAL DATE

REGISTERED PROFESSIONAL ENGINEER
Randell D. Hiatt
No. C50200
Exp. 6-30-09
CIVIL
STATE OF CALIFORNIA

*The State of California or its officers or agents shall not be responsible for the accuracy or completeness of electronic copies of this plan sheet.*

*To accompany plans dated* 6-1-10

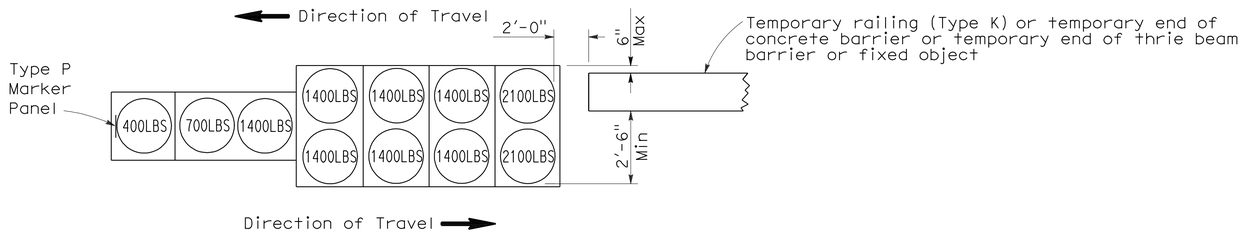


ARRAY 'TB11'

Approach speed less than 45 mph

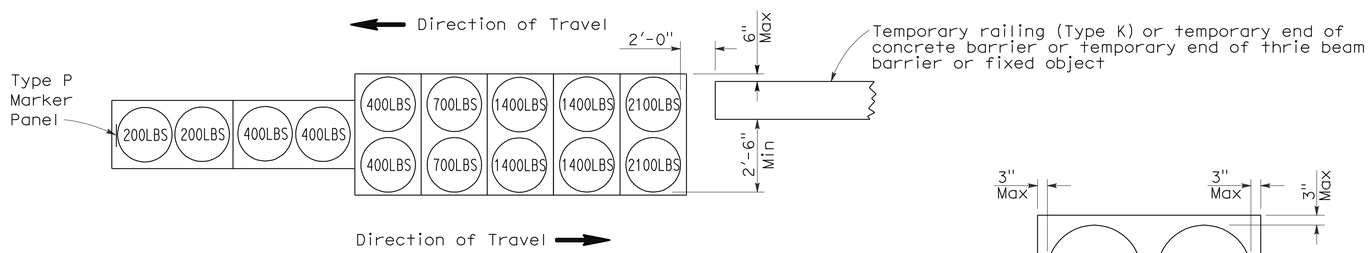


ARRAY 'TB14'

Approach speed 45 mph or more

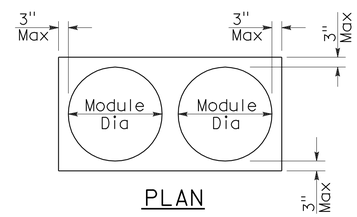


PLAN

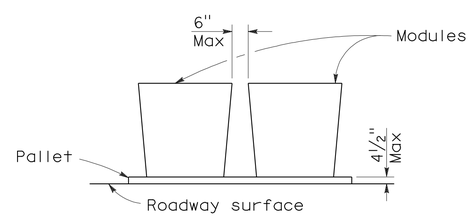


ELEVATION

CRASH CUSHION PALLET DETAIL

See Note 7

NOTES:

1. (XXX) Indicates sand filled module location and weight of sand in pounds for each module. Module spacing is based on the greater diameter of the module.
2. All sand weights are nominal.
3. Temporary crash cushion arrays shall not encroach on the traveled way.
4. Place the Type P marker panel so that the bottom of the panel rests upon the pallet.
5. Refer to Standard Plan A73B for marker details.
6. Approach speeds indicated conform to NCHRP 350 Report criteria.
7. Use of pallets is optional.

STATE OF CALIFORNIA
DEPARTMENT OF TRANSPORTATION

# TEMPORARY CRASH CUSHION, SAND FILLED (BIDIRECTIONAL)

NO SCALE

RSP T1B DATED JUNE 6, 2008 SUPERSEDES STANDARD PLAN T1B
DATED MAY 1, 2006 - PAGE 212 OF THE STANDARD PLANS BOOK DATED MAY 2006.

**REVISED STANDARD PLAN RSP T1B**

**2006 REVISED STANDARD PLAN RSP T1B**

5-15-08

| DIST | COUNTY | ROUTE | POST MILES TOTAL PROJECT | SHEET NO. | TOTAL SHEETS |
|---|---|---|---|---|---|
| 01 | Lak | 53 | 2.8/7.5 | 196 | 217 |

Randell D. Hiatt
REGISTERED CIVIL ENGINEER

June 6, 2008
PLANS APPROVAL DATE

REGISTERED PROFESSIONAL ENGINEER
Randell D. Hiatt
No. C50200
Exp. 6-30-09
CIVIL
STATE OF CALIFORNIA

*The State of California or its officers or agents shall not be responsible for the accuracy or completeness of electronic copies of this plan sheet.*

*To accompany plans dated* 6-1-10

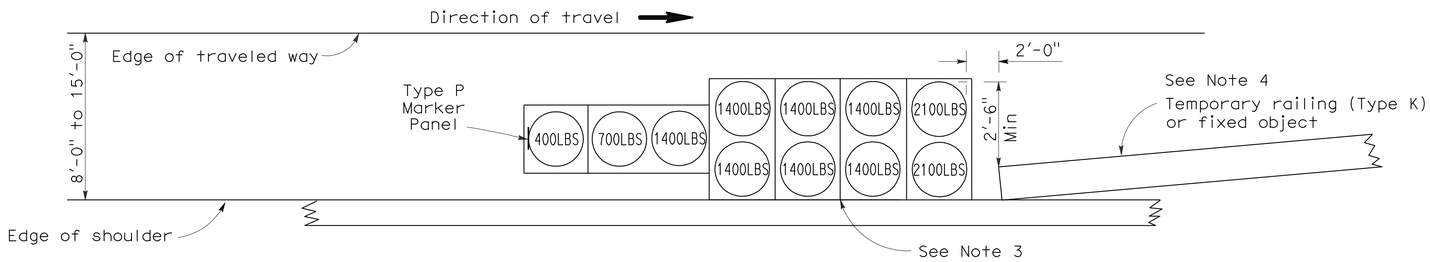


## ARRAY 'TS11'

Approach speed less than 45 mph
See Note 9

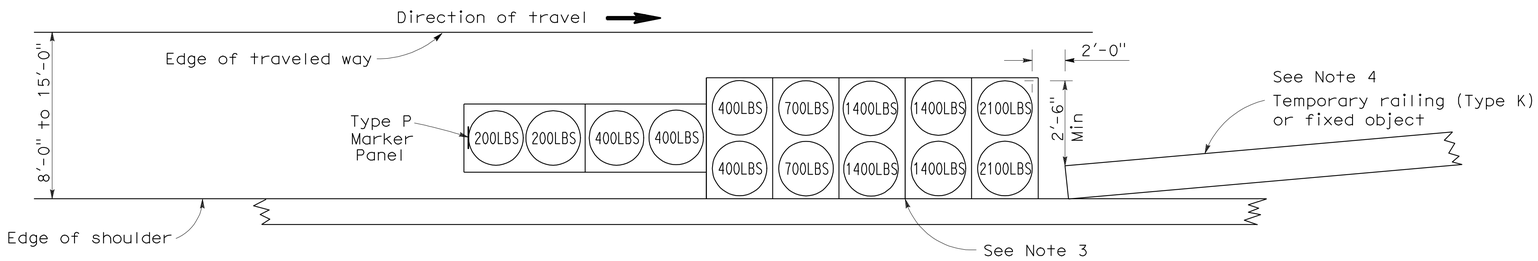


## ARRAY 'TS14'

Approach speed 45 mph or more
See Note 9

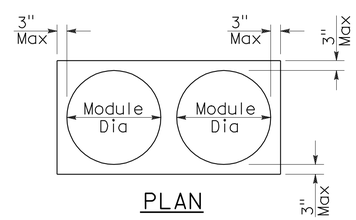


PLAN

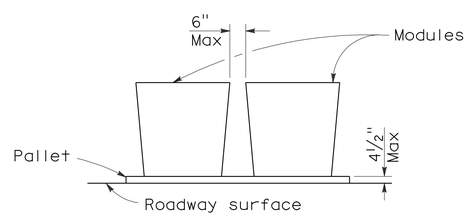


ELEVATION

## CRASH CUSHION PALLET DETAIL

See Note 11

## NOTES:

1. (XXX) Indicates sand filled module location and weight of sand in pounds for each module. Module spacing is based on the greater diameter of the module.
2. All sand weights are nominal.
3. The temporary crash cushion arrays shown on this plan shall be used only in locations where there will be traffic on one side of the temporary crash cushion array.
4. If the fixed object or approach end of the temporary railing is less than 15'-0" from the edge of traveled way, a temporary crash cushion is required in a construction or work zone.
5. Temporary crash cushion arrays shall not encroach on the traveled way.
6. Arrays for median shoulders shall conform to details shown on this plan for outside shoulders.
7. Place the Type P marker panel so that the bottom of the panel rests upon the pallet and faces traffic.
8. Refer to Standard Plan A73B for marker details.
9. For shoulder widths less than 8'-0", appropriate approved crash cushion protection, other than sand filled modules, shall be provided at fixed objects and at approach ends of temporary railing. The specific type of crash cushion shall be as shown on the project plans or as specified in the Special Provisions, or if not shown on the project plans or specified in the Special Provisions, shall be as approved by the Engineer.
10. Approach speeds indicated conform to NCHRP 350 Report criteria.
11. Use of pallets is optional.

STATE OF CALIFORNIA
DEPARTMENT OF TRANSPORTATION

# TEMPORARY CRASH CUSHION, SAND FILLED (SHOULDER INSTALLATIONS)

NO SCALE

RSP T2 DATED JUNE 6, 2008 SUPERSEDES STANDARD PLAN T2
DATED MAY 1, 2006 - PAGE 213 OF THE STANDARD PLANS BOOK DATED MAY 2006.

**REVISED STANDARD PLAN RSP T2**

**2006 REVISED STANDARD PLAN RSP T2**

5-15-08

| DIST | COUNTY | ROUTE | POST MILES TOTAL PROJECT | SHEET NO. | TOTAL SHEETS |
|---|---|---|---|---|---|
| 01 | Lak | 53 | 2.8/7.5 | 197 | 217 |

REGISTERED CIVIL ENGINEER

November 17, 2006
PLANS APPROVAL DATE

REGISTERED PROFESSIONAL ENGINEER — Greg W. Edwards — No. C36386 — Exp. 6-30-08 — CIVIL — STATE OF CALIFORNIA

*The State of California or its officers or agents shall not be responsible for the accuracy or completeness of electronic copies of this plan sheet.*

*To accompany plans dated* 6-1-10

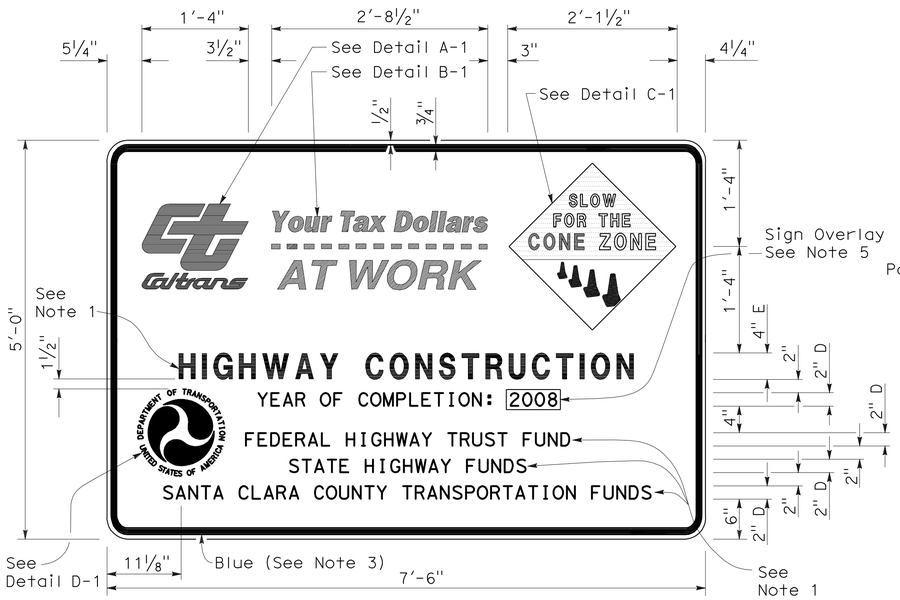


TYPE 1

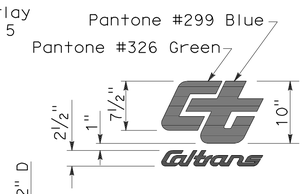


DETAIL A-1

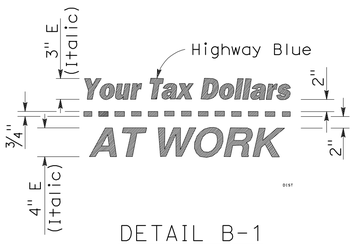


DETAIL B-1
(See Note 3)

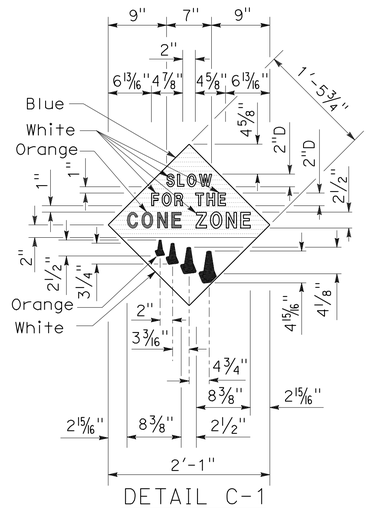


DETAIL C-1
(See Note 4)

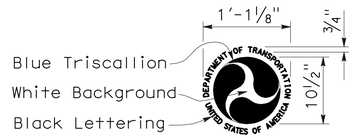


DETAIL D-1
(See Note 6)

## NOTES:

1. The sign messages shown for type of project and fund types are examples only. See the Special Provisions for the applicable type of project and fund type messages to be used.
2. Except as otherwise shown, the legend of sign shall be black on a white background (non-reflective).
3. The border of the signs and details "B-1" and "B-2" shall be blue (non-reflective).
4. The diamond in details "C-1" and "C-2" shall be blue for the background of message, " SLOW FOR THE CONE ZONE", and white background for the orange cones. The color and type of font for the "SLOW FOR THE CONE ZONE" message shall be: "SLOW" white D; "FOR THE" white D; "CONE" orange Arial font; "ZONE" white Arial font.
5. Year of completion of project construction shown on the overlay is an example only. See the Special Provisions.
6. Use when the Project involves Federal Highway Trust Fund.

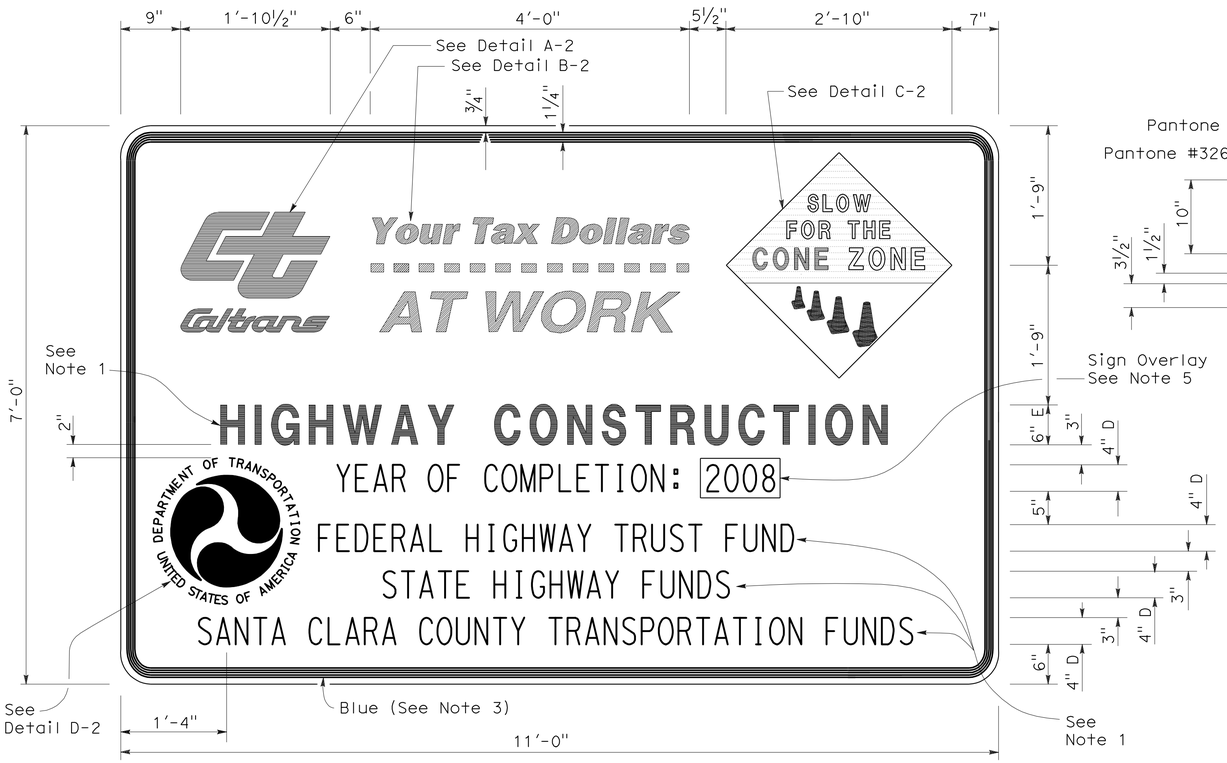


TYPE 2

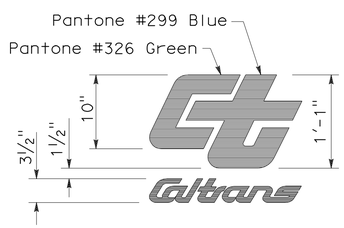


DETAIL A-2

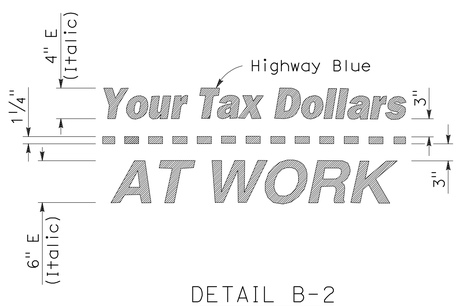


DETAIL B-2
(See Note 3)

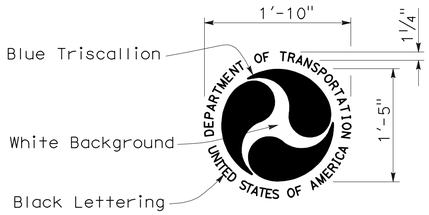


DETAIL D-2
(See Note 6)

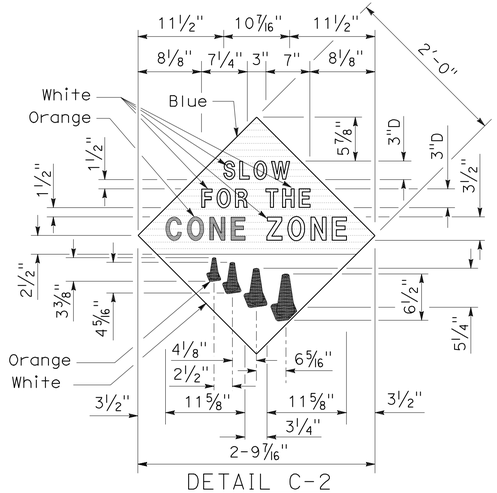


DETAIL C-2
(See Note 4)

STATE OF CALIFORNIA
DEPARTMENT OF TRANSPORTATION

# CONSTRUCTION PROJECT FUNDING IDENTIFICATION SIGNS

NO SCALE

RSP T7 DATED NOVEMBER 17, 2006 SUPERSEDES STANDARD PLAN T7
DATED MAY 1, 2006 - PAGE 217 OF THE STANDARD PLANS BOOK DATED MAY 2006.

**REVISED STANDARD PLAN RSP T7**

**2006 REVISED STANDARD PLAN RSP T7**

9-7-06

| DIST | COUNTY | ROUTE | POST MILES TOTAL PROJECT | SHEET NO. | TOTAL SHEETS |
|---|---|---|---|---|---|
| 01 | Lak | 53 | 2.8/7.5 | 198 | 217 |

Robert B. Schott
LICENSED LANDSCAPE ARCHITECT

April 3, 2009
PLANS APPROVAL DATE

LICENSED LANDSCAPE ARCHITECT
Robert B. Schott 3025
Robert B. Schott
Signature
11-30-10
Renewal Date
2-25-09
Date
STATE OF CALIFORNIA

*The State of California or its officers or agents shall not be responsible for the accuracy or completeness of electronic copies of this plan sheet.*

*To accompany plans dated* 6-1-10

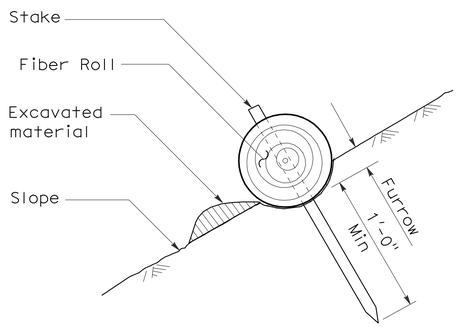


SECTION

TEMPORARY FIBER ROLL (TYPE 1)

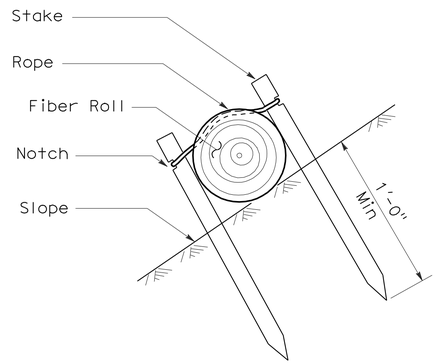


SECTION

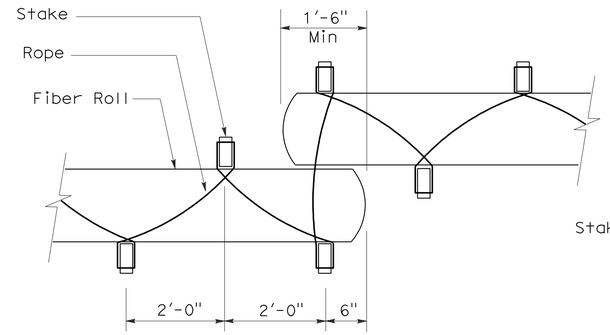


PLAN

TEMPORARY FIBER ROLL (TYPE 2)

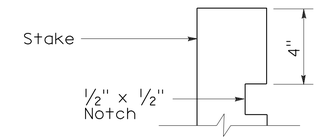


ELEVATION

STAKE NOTCH DETAIL

NOTES:

1. Temporary fiber roll spacing varies depending upon slope inclination.
2. Installations shown in the perspectives are for slope inclination of 10:1 and steeper.

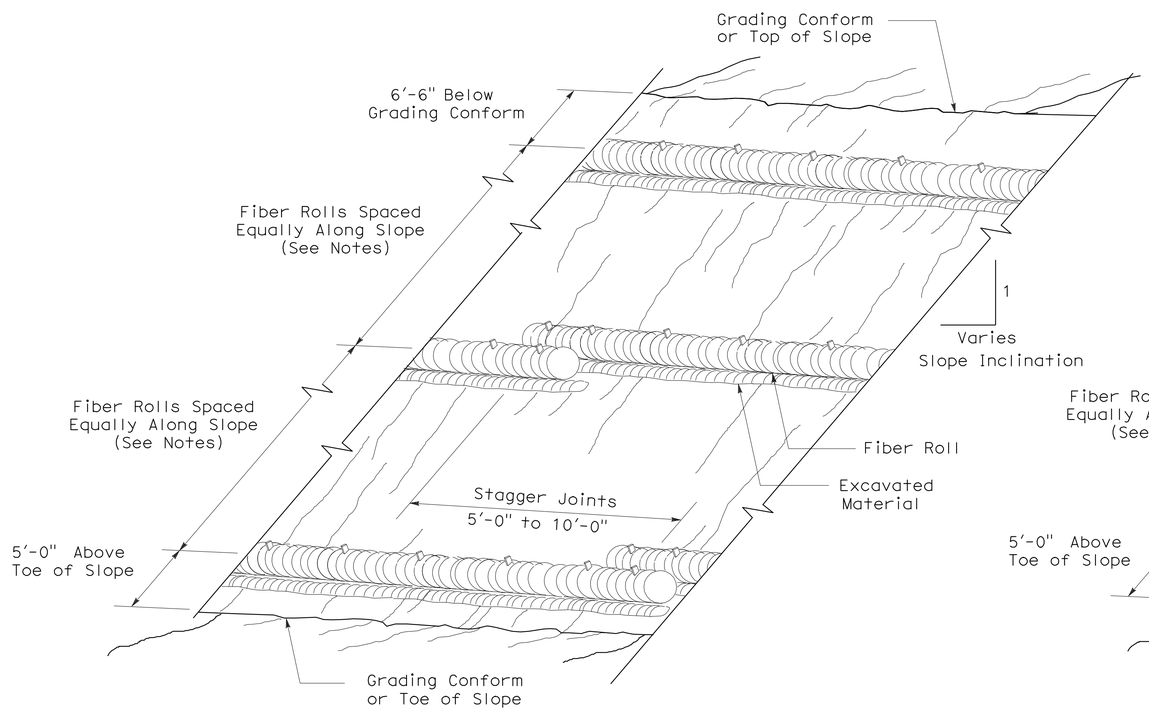


PERSPECTIVE

TEMPORARY FIBER ROLL (TYPE 1)

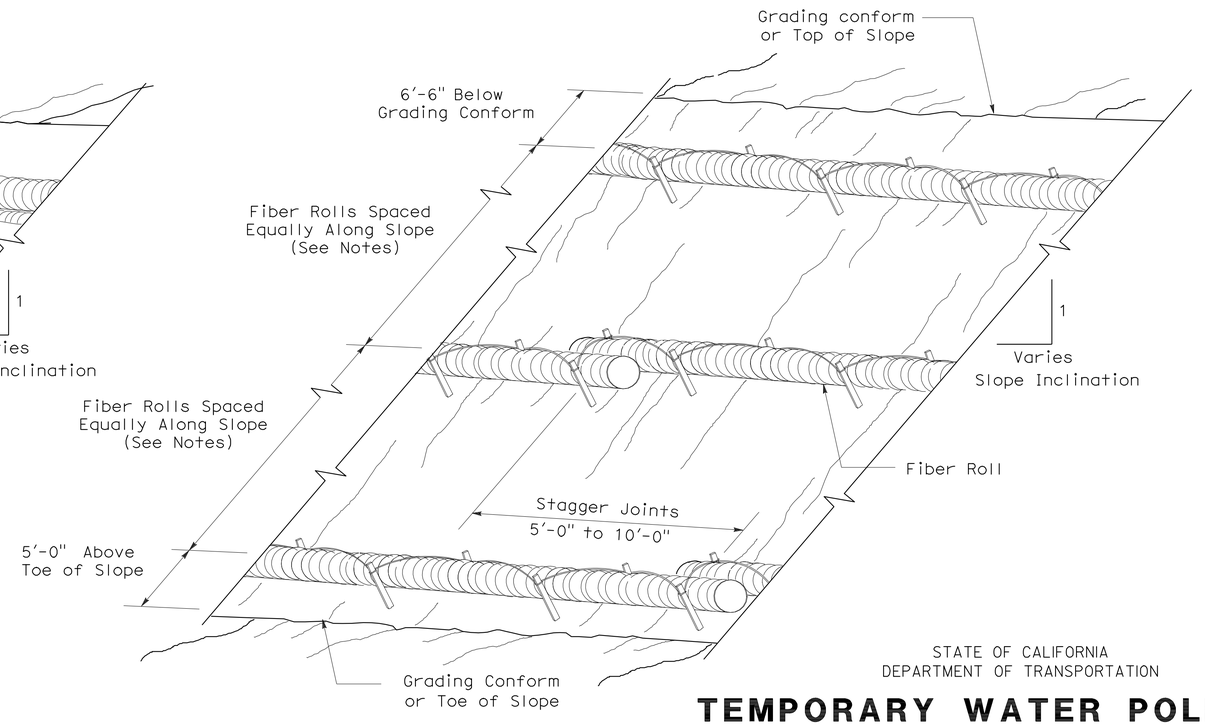


PERSPECTIVE

TEMPORARY FIBER ROLL (TYPE 2)

STATE OF CALIFORNIA
DEPARTMENT OF TRANSPORTATION

# TEMPORARY WATER POLLUTION CONTROL DETAILS (TEMPORARY FIBER ROLL)

NO SCALE

RSP T56 DATED APRIL 3, 2009 SUPERSEDES STANDARD PLAN T56
DATED MAY 1, 2006 - PAGE 232 OF THE STANDARD PLANS BOOK DATED MAY 2006.

**REVISED STANDARD PLAN RSP T56**

**2006 REVISED STANDARD PLAN RSP T56**

2-23-09

| DIST | COUNTY | ROUTE | POST MILES TOTAL PROJECT | SHEET NO. | TOTAL SHEETS |
|---|---|---|---|---|---|
| 01 | Lak | 53 | 2.8/7.5 | 199 | 217 |

LICENSED LANDSCAPE ARCHITECT

August 15, 2008
PLANS Approval DATE

*The State of California or its officers or agents shall not be responsible for the accuracy or completeness of electronic copies of this plan sheet.*

LICENSED LANDSCAPE ARCHITECT Robert B. Schott 3895 Signature 11-04-08 Renewal Date 08-11-08 Date STATE OF CALIFORNIA

*To accompany plans dated* 6-1-10

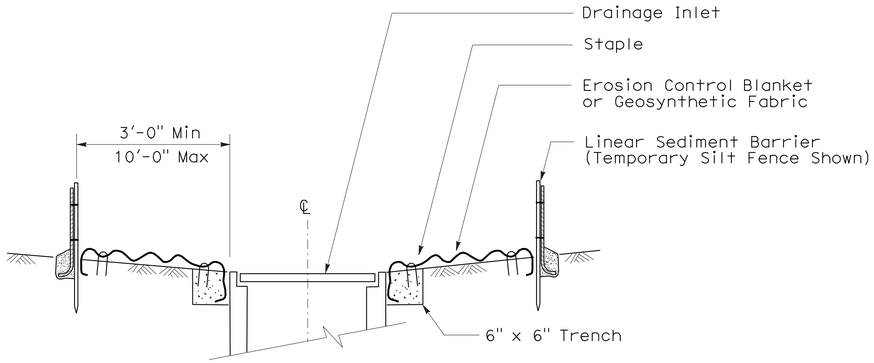


SECTION A-A

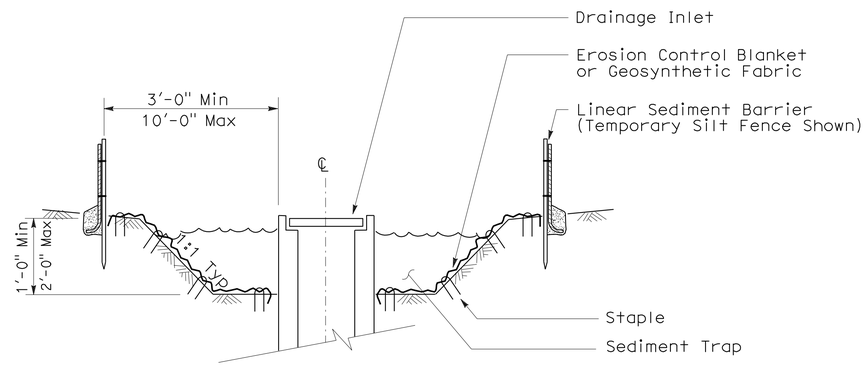


SECTION B-B

## NOTES:

1. See Standard Plan T51 for Temporary Silt Fence.
2. Dimensions may vary to fit field conditions.

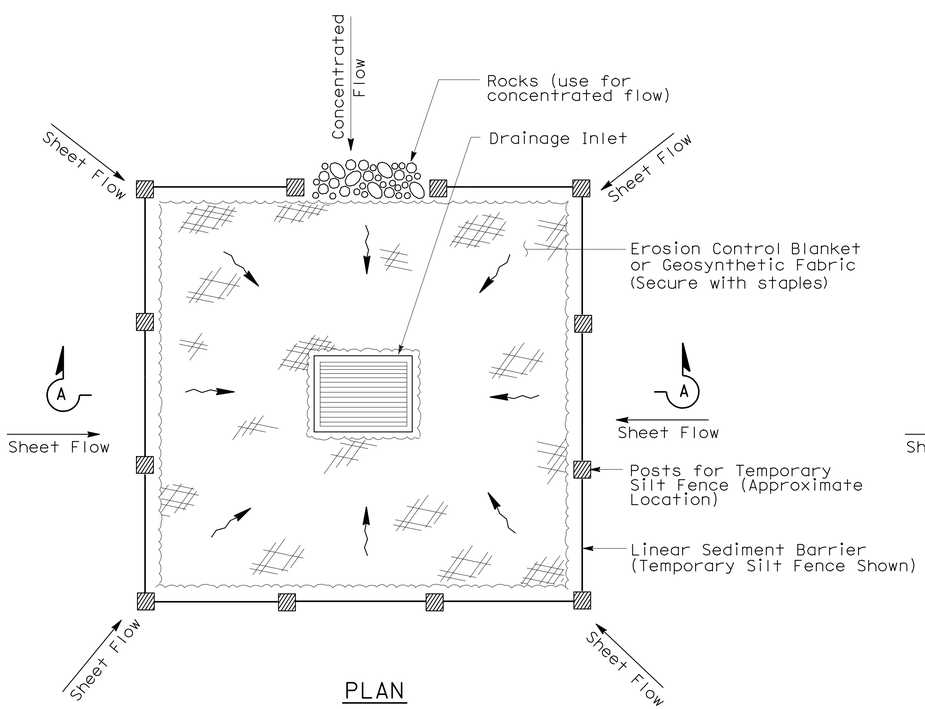


PLAN

TEMPORARY DRAINAGE INLET PROTECTION (TYPE 1)

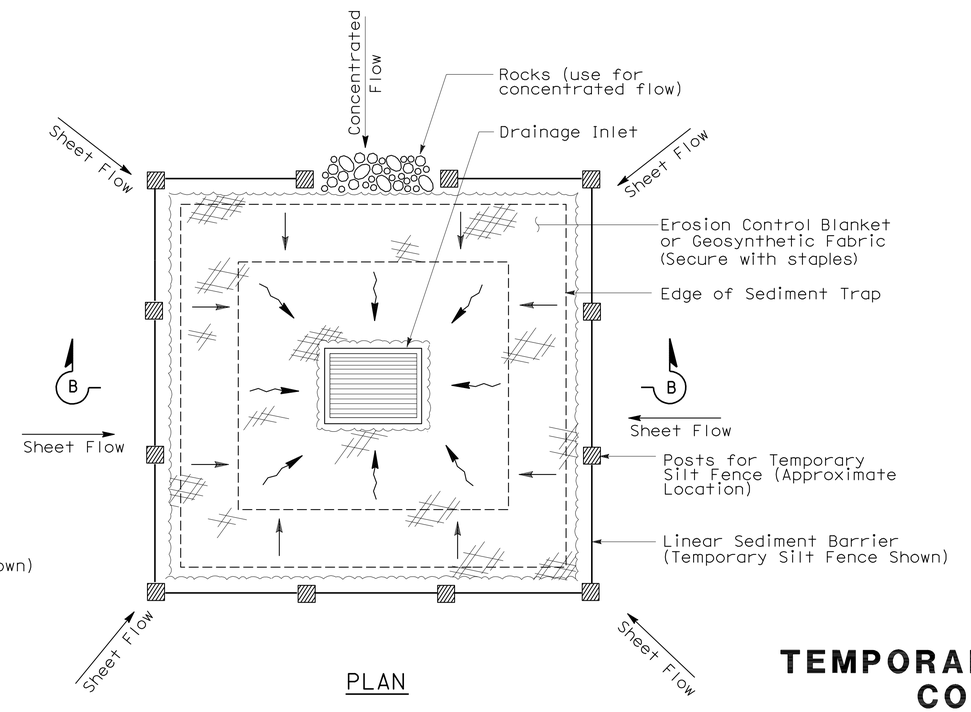


PLAN

TEMPORARY DRAINAGE INLET PROTECTION (TYPE 2) (EXCAVATED SEDIMENT TRAP)

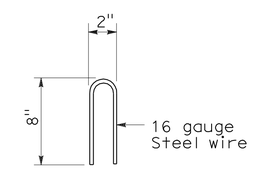


STAPLE DETAIL

STATE OF CALIFORNIA
DEPARTMENT OF TRANSPORTATION

# TEMPORARY WATER POLLUTION CONTROL DETAILS (TEMPORARY DRAINAGE INLET PROTECTION)

NO SCALE

NSP T61 DATED AUGUST 15, 2008 SUPPLEMENTS THE STANDARD PLANS BOOK DATED MAY 2006.

**NEW STANDARD PLAN NSP T61**

**2006 NEW STANDARD PLAN NSP T61**

7-11-08

| DIST | COUNTY | ROUTE | POST MILES TOTAL PROJECT | SHEET NO. | TOTAL SHEETS |
|---|---|---|---|---|---|
| 01 | Lak | 53 | 2.8/7.5 | 200 | 217 |

LICENSED LANDSCAPE ARCHITECT

August 15, 2008
PLANS APPROVAL DATE

LICENSED LANDSCAPE ARCHITECT Robert B. Schott 3625 Signature 11-04-08 Renewal Date 08-11-08 Date STATE OF CALIFORNIA

*The State of California or its officers or agents shall not be responsible for the accuracy or completeness of electronic copies of this plan sheet.*

*To accompany plans dated* 6-1-10

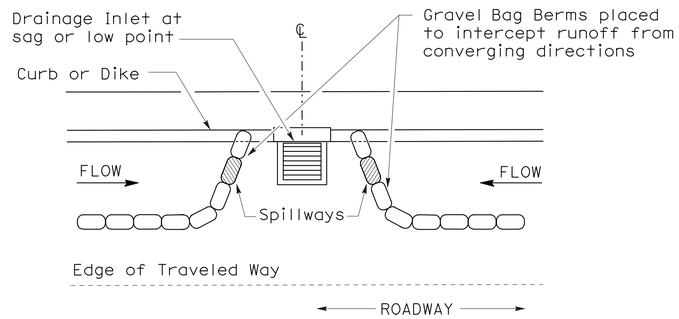


PLAN

## CONFIGURATION FOR SAG POINT INLET (GRAVEL BAG BERM)

## GRAVEL BAG BERM (TYPE 3A) SPACING TABLE

| SLOPE OF ROADWAY (PERCENT) | 1 to 3.9 | 4 to 5.9 | 6 to 7.9 | 8 to 10 | 10+ |
|---|---|---|---|---|---|
| INTERVAL BETWEEN BERM | 100′ | 75′ | 50′ | 25′ | 12′ |

For slope of less than 1%, install barriers only if erosion/sediment is prevalent

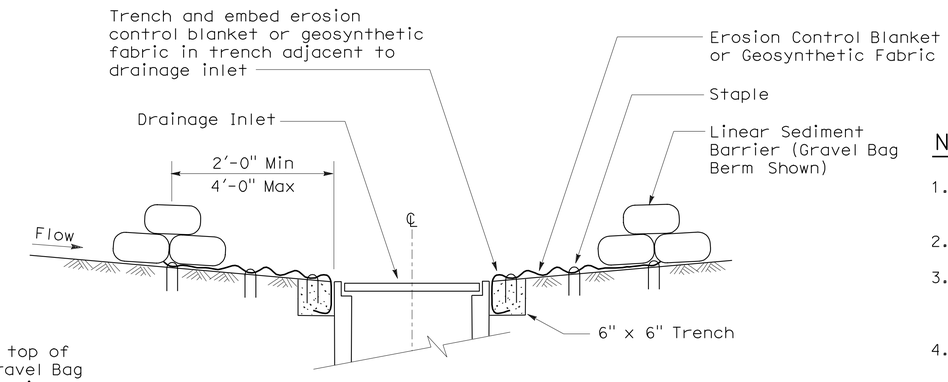


SECTION A-A

## NOTES:

1. Place safety cones adjacent to drainage inlet protection.
2. Dimensions may vary to fit field conditions.
3. Install a minimum of 3 gravel bag berms upstream of each drainage inlet to be protected.
4. Position erosion control blanket or geosynthetic fabric at edge of concrete apron and secure in trench.
5. Erosion control blanket or geosynthetic fabric is not required if the area adjacent to the drainage inlet is vegetated or paved.

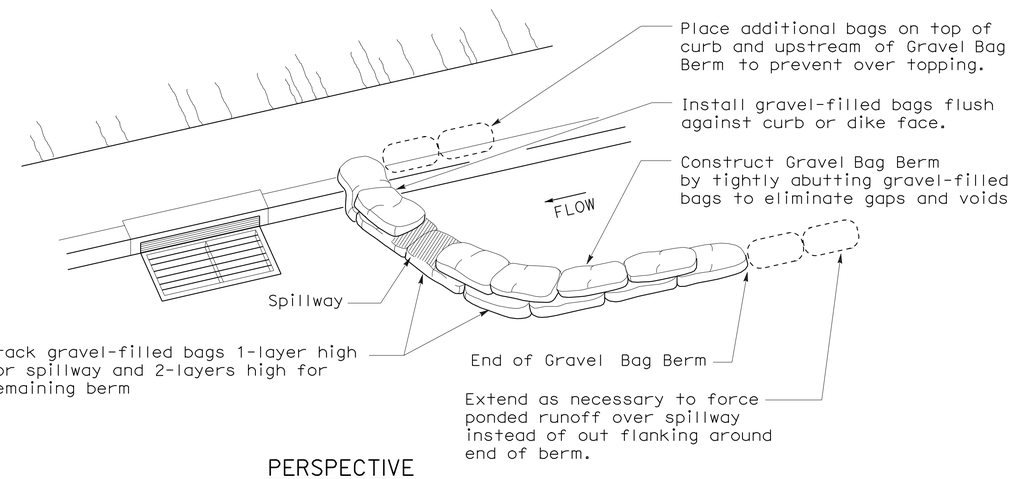


PERSPECTIVE

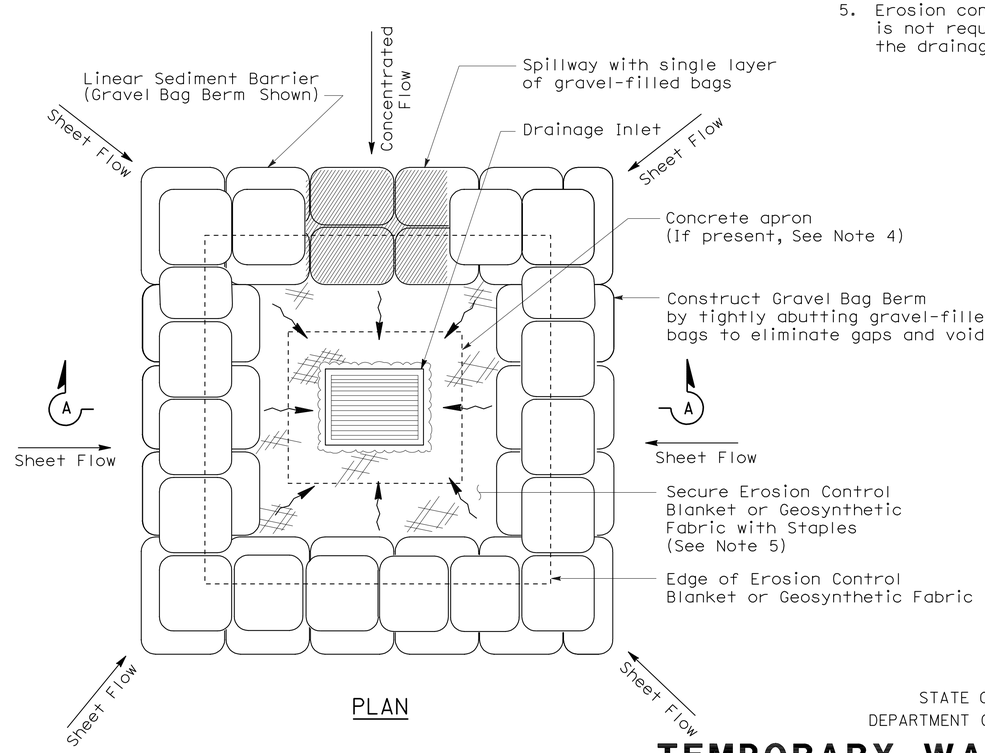


PLAN

## TEMPORARY DRAINAGE INLET PROTECTION (TYPE 3B)

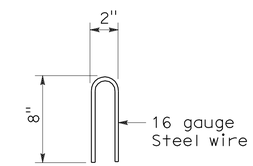


STAPLE DETAIL

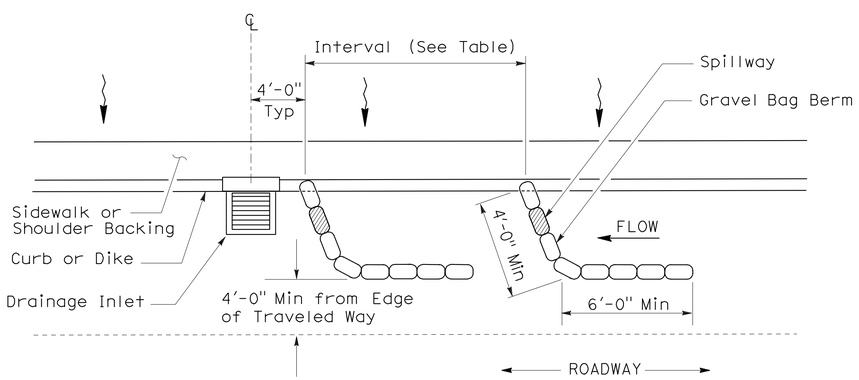


PLAN

## TEMPORARY DRAINAGE INLET PROTECTION (TYPE 3A) (GRAVEL BAG BERM)

STATE OF CALIFORNIA
DEPARTMENT OF TRANSPORTATION

# TEMPORARY WATER POLLUTION CONTROL DETAILS (TEMPORARY DRAINAGE INLET PROTECTION)

NO SCALE

NSP T62 DATED AUGUST 15, 2008 SUPPLEMENTS THE STANDARD PLANS BOOK DATED MAY 2006.

**NEW STANDARD PLAN NSP T62**

**2006 NEW STANDARD PLAN NSP T62**

7-11-08