Dist	COUNTY	ROUTE	POST MILES TOTAL PROJECT	SHEET No.	TOTAL SHEETS
01	Men	128	Var	1	106

STATE OF CALIFORNIA

DEPARTMENT OF TRANSPORTATION

ACSTPI-P128(052)E

PROJECT PLANS FOR CONSTRUCTION ON

STATE HIGHWAY

IN MENDOCINO COUNTY AT VARIOUS LOCATIONS

TO BE SUPPLEMENTED BY STANDARD PLANS DATED 2010

INDEX OF PLANS

SHEET No.	DESCRIPTION
1	TITLE AND LOCATION MAP
2	LOCATIONS OF CONSTRUCTION
3	CONSTRUCTION DETAILS
4-5	TEMPORARY WATER POLLUTION CONTROL DETAILS AND QUANTITIES
6-81	DRAINAGE PROFILES, DETAILS AND QUANTITIES
82	CONSTRUCTION AREA SIGNS
83	PAVEMENT DELINEATION QUANTITIES
84-86	SUMMARY OF QUANTITIES
87-100	EROSION CONTROL LEGEND, PLANS, DETAILS AND QUANTITIES
101-106	REVISED STANDARD PLANS

THE STANDARD PLANS LIST APPLICABLE TO THIS CONTRACT IS INCLUDED IN THE NOTICE TO BIDDERS AND SPECIAL PROVISIONS BOOK.

LOCATION MAP

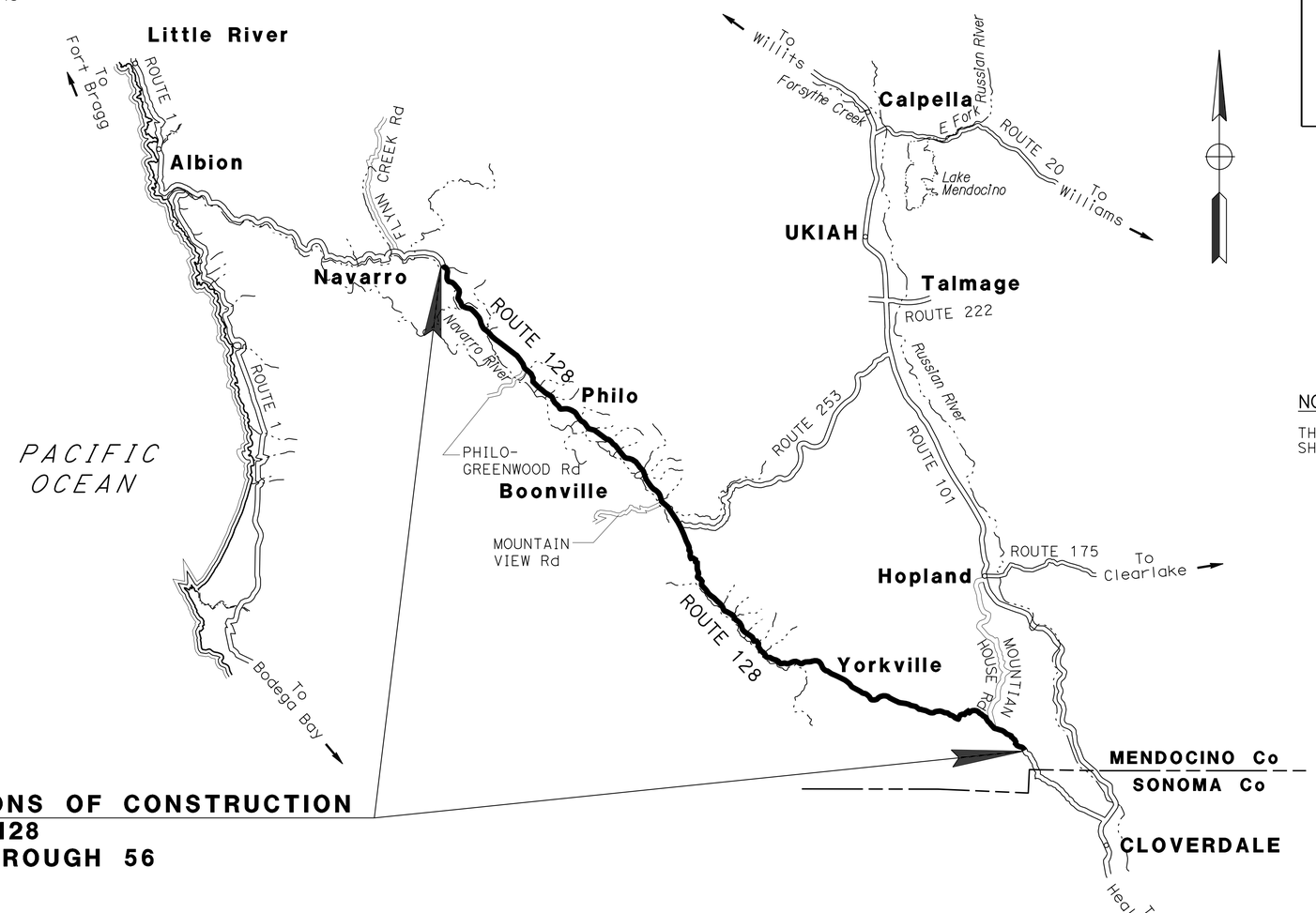

NOTE:

THE TABLE OF LOCATIONS OF CONSTRUCTION IS SHOWN ON SHEET LC-1.

LOCATIONS OF CONSTRUCTION
ROUTE 128
DS 1 THROUGH 56

NO SCALE

THE CONTRACTOR SHALL POSSESS THE CLASS (OR CLASSES) OF LICENSE AS SPECIFIED IN THE "NOTICE TO BIDDERS."

PROJECT MANAGER: SEBASTIAN COHEN

DESIGN ENGINEER: ROBERT E. POLGAR

Larisa V. Sasevich 6-24-13
PROJECT ENGINEER DATE
REGISTERED CIVIL ENGINEER

June 24, 2013
PLANS APPROVAL DATE

REGISTERED PROFESSIONAL ENGINEER LARISA V. SASEVICH No. C 71520 Exp. 12-31-13 CIVIL STATE OF CALIFORNIA

THE STATE OF CALIFORNIA OR ITS OFFICERS OR AGENTS SHALL NOT BE RESPONSIBLE FOR THE ACCURACY OR COMPLETENESS OF SCANNED COPIES OF THIS PLAN SHEET.

CONTRACT No.	01-378164
PROJECT ID	0100000136

LAST REVISION 03-30-11

DATE PLOTTED => 08-AUG-2013
TIME PLOTTED => 09:58

Dist	COUNTY	ROUTE	POST MILES TOTAL PROJECT	SHEET No.	TOTAL SHEETS
01	Men	128	Var	2	106

Larisa V. Sasevich 6-24-13
REGISTERED CIVIL ENGINEER DATE

6-24-13
PLANS APPROVAL DATE

REGISTERED PROFESSIONAL ENGINEER
LARISA V. SASEVICH
No. 71520
Exp. 12-31-13
CIVIL
STATE OF CALIFORNIA

THE STATE OF CALIFORNIA OR ITS OFFICERS OR AGENTS SHALL NOT BE RESPONSIBLE FOR THE ACCURACY OR COMPLETENESS OF SCANNED COPIES OF THIS PLAN SHEET.

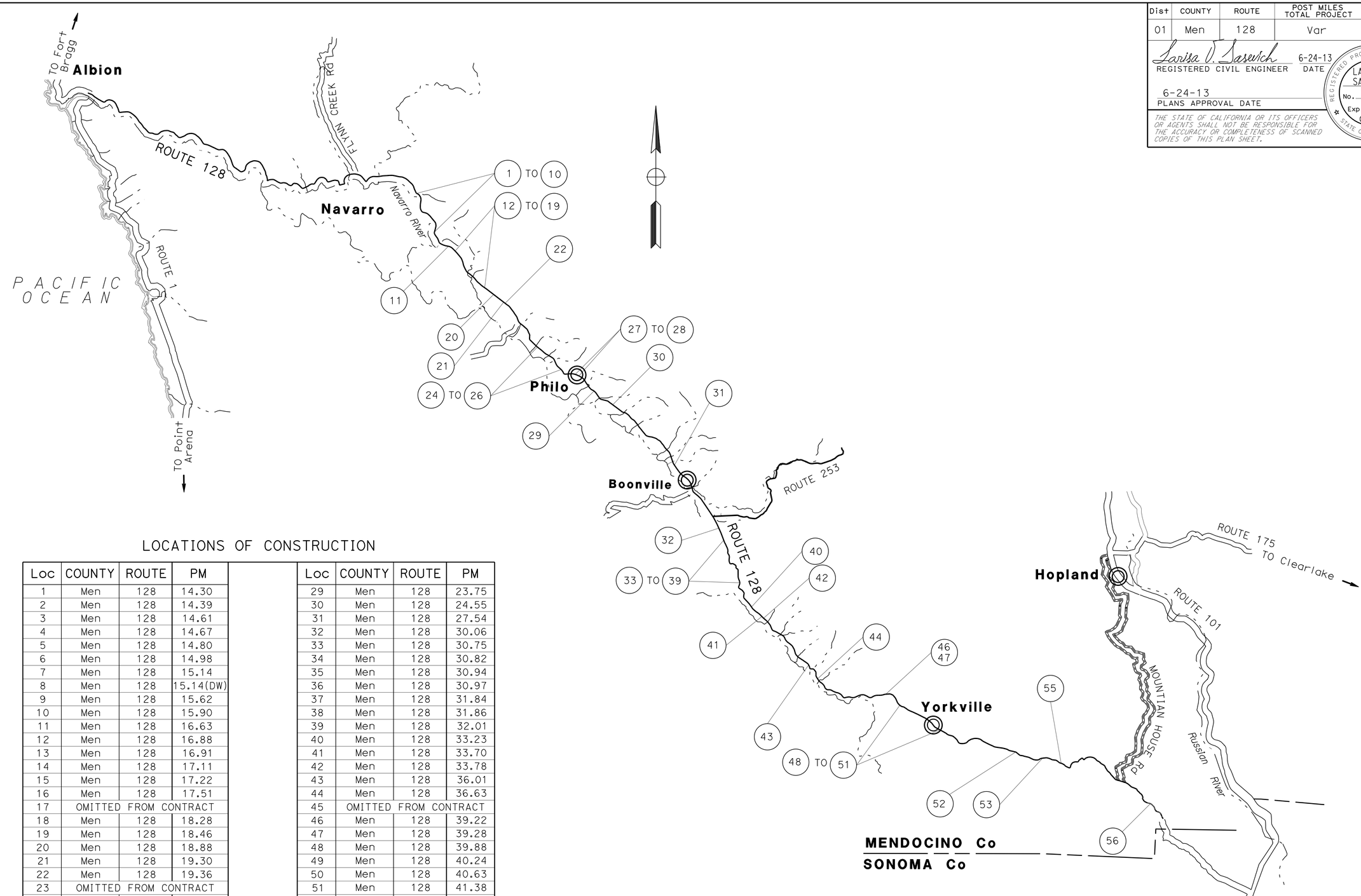

LOCATIONS OF CONSTRUCTION

Loc	COUNTY	ROUTE	PM	Loc	COUNTY	ROUTE	PM
1	Men	128	14.30	29	Men	128	23.75
2	Men	128	14.39	30	Men	128	24.55
3	Men	128	14.61	31	Men	128	27.54
4	Men	128	14.67	32	Men	128	30.06
5	Men	128	14.80	33	Men	128	30.75
6	Men	128	14.98	34	Men	128	30.82
7	Men	128	15.14	35	Men	128	30.94
8	Men	128	15.14(DW)	36	Men	128	30.97
9	Men	128	15.62	37	Men	128	31.84
10	Men	128	15.90	38	Men	128	31.86
11	Men	128	16.63	39	Men	128	32.01
12	Men	128	16.88	40	Men	128	33.23
13	Men	128	16.91	41	Men	128	33.70
14	Men	128	17.11	42	Men	128	33.78
15	Men	128	17.22	43	Men	128	36.01
16	Men	128	17.51	44	Men	128	36.63
17	OMITTED FROM CONTRACT			45	OMITTED FROM CONTRACT		
18	Men	128	18.28	46	Men	128	39.22
19	Men	128	18.46	47	Men	128	39.28
20	Men	128	18.88	48	Men	128	39.88
21	Men	128	19.30	49	Men	128	40.24
22	Men	128	19.36	50	Men	128	40.63
23	OMITTED FROM CONTRACT			51	Men	128	41.38
24	Men	128	21.23	52	Men	128	45.21
25	Men	128	21.80	53	Men	128	45.25
26	Men	128	21.96	54	OMITTED FROM CONTRACT		
27	Men	128	22.83	55	Men	128	45.91
28	Men	128	22.97	56	Men	128	49.28

LOCATIONS OF CONSTRUCTION

NO SCALE

LC-1

STATE OF CALIFORNIA - DEPARTMENT OF TRANSPORTATION
Caltrans®
DIVISION OF ENGINEERING

FUNCTIONAL SUPERVISOR: ROBERT E. POLGAR

CALCULATED-DESIGNED BY: LARISA V. SASEVICH
CHECKED BY: MARTIN GARCIA

REVISED BY | DATE REVISED

LAST REVISION 06-22-13 | DATE PLOTTED => 07-AUG-2013 | TIME PLOTTED => 14:56

Dist	COUNTY	ROUTE	POST MILES TOTAL PROJECT	SHEET No.	TOTAL SHEETS
01	Men	128	Var	3	106

Robert E. Polgar 6-24-13
REGISTERED CIVIL ENGINEER DATE

6-24-13
PLANS APPROVAL DATE

REGISTERED PROFESSIONAL ENGINEER ROBERT E. POLGAR No. 51768 Exp. 6-30-14 CIVIL STATE OF CALIFORNIA

THE STATE OF CALIFORNIA OR ITS OFFICERS OR AGENTS SHALL NOT BE RESPONSIBLE FOR THE ACCURACY OR COMPLETENESS OF SCANNED COPIES OF THIS PLAN SHEET.

NOTES:

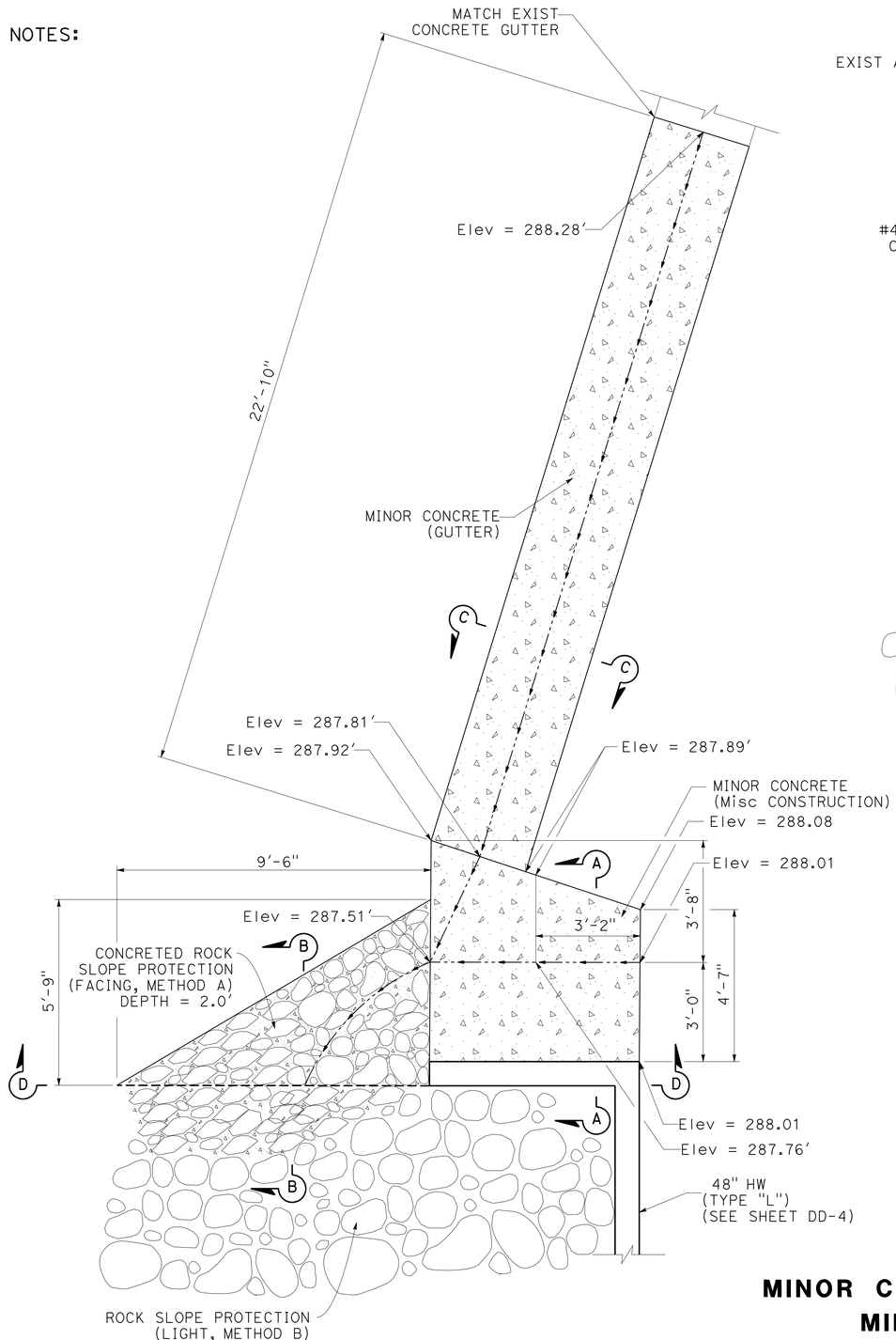

PLAN

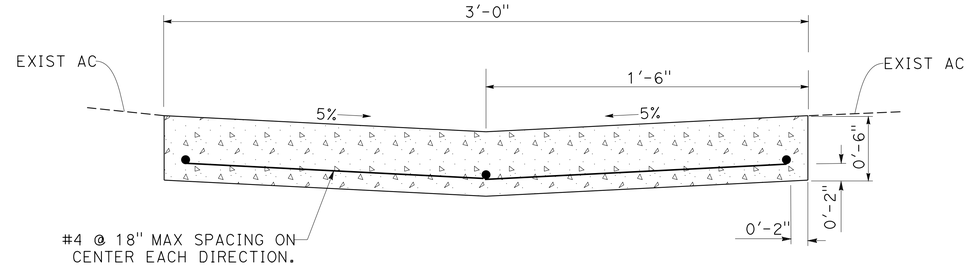

SECTION C-C

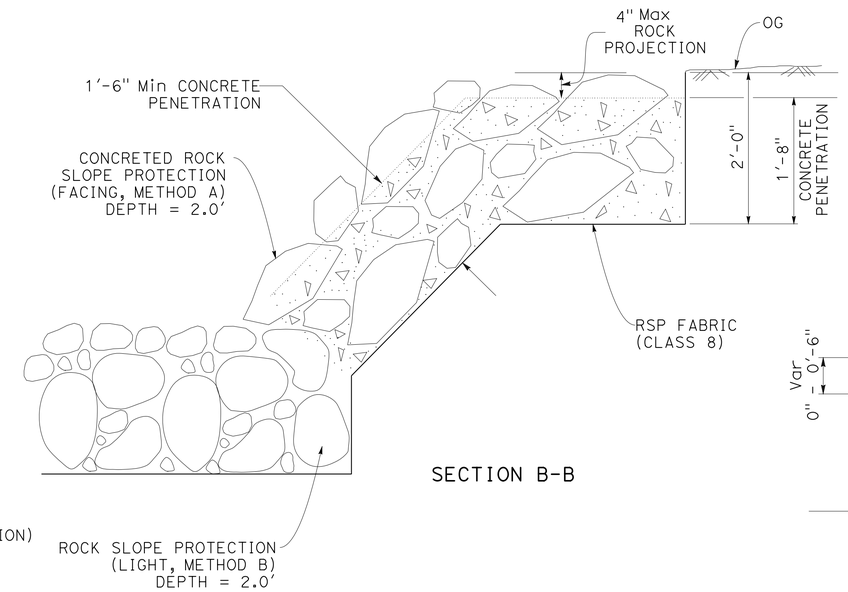

SECTION B-B

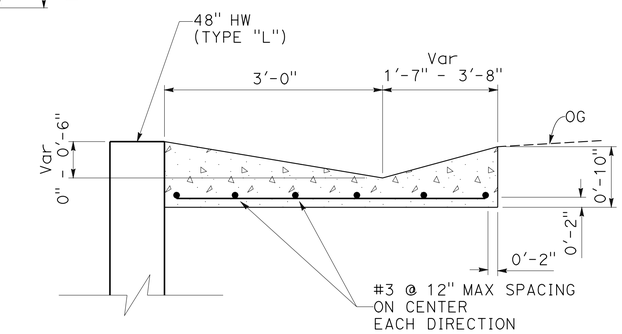

SECTION A-A

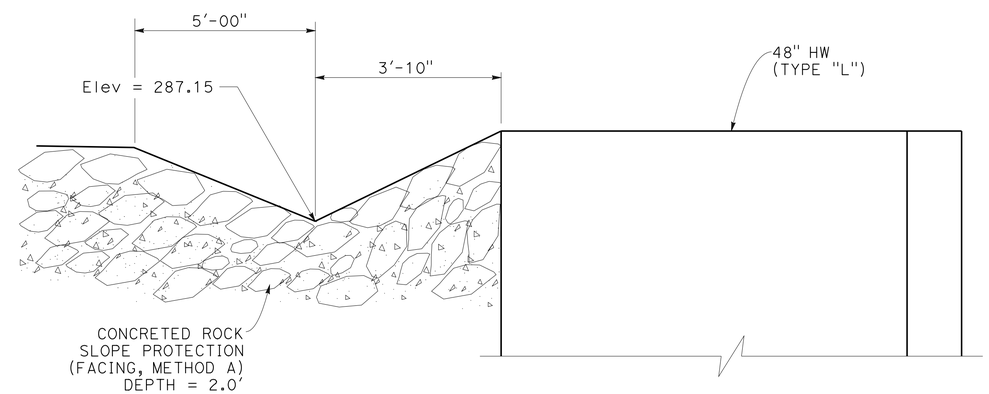

SECTION D-D

MINOR CONCRETE (Misc CONSTRUCTION)
MINOR CONCRETE (GUTTER)

DRAINAGE SYSTEM (28)
PM 22.97

CONSTRUCTION DETAILS
NO SCALE

C-1

STATE OF CALIFORNIA - DEPARTMENT OF TRANSPORTATION
Caltrans
DIVISION OF ENGINEERING

FUNCTIONAL SUPERVISOR: ROBERT E. POLGAR
CALCULATED-DESIGNED BY: MEL ZELEKE
CHECKED BY: ROBERT E. POLGAR
REVISED BY
DATE REVISED

LAST REVISION 03-30-11
DATE PLOTTED => 07-AUG-2013
TIME PLOTTED => 14:56

Dist	COUNTY	ROUTE	POST MILES TOTAL PROJECT	SHEET No.	TOTAL SHEETS
01	Men	128	Var	4	106

Larisa V. Sasevich 6-24-13
REGISTERED CIVIL ENGINEER DATE

6-24-13
PLANS APPROVAL DATE

REGISTERED PROFESSIONAL ENGINEER LARISA V. SASEVICH No. 71520 Exp. 12-31-13 CIVIL STATE OF CALIFORNIA

THE STATE OF CALIFORNIA OR ITS OFFICERS OR AGENTS SHALL NOT BE RESPONSIBLE FOR THE ACCURACY OR COMPLETENESS OF SCANNED COPIES OF THIS PLAN SHEET.

NOTE:

1. EXACT LOCATION OF THE PLASTIC PIPE TO BE DETERMINED IN THE FIELD BY THE ENGINEER.
2. GRAVEL FILLED BAG ANCHORS TO BE PLACED AT INTERMEDIATE LOCATIONS AS DETERMINED BY THE ENGINEER.
3. USE FLEXIBLE PIPE WITH WATER TIGHT JOINTS AS NECESSARY TO FOLLOW CREEK ALIGNMENT.
4. TEMPORARY DAM CAN BE CONSTRUCTED AS TYPE 1 OR TYPE 2.
5. IF VELOCITIES ARE GREATER THAN 6 ft/s, A ROCK ENERGY DISSAPATOR SHALL BE PLACED AT THE OUTFALL OF THE PLASTIC PIPE.
6. METHOD OF ATTACHING TEMPORARY PLASTIC PIPE TO EXISTING CSP CULVERT WALL OR RCB CULVERT WALL TO BE APPROVED BY THE ENGINEER.
7. AT PM 21.80, TEMPORARY CREEK DIVERSION SYSTEM IS INCLUDED IN THE PRICE FOR JACKED 60" WELDED STEEL PIPE.

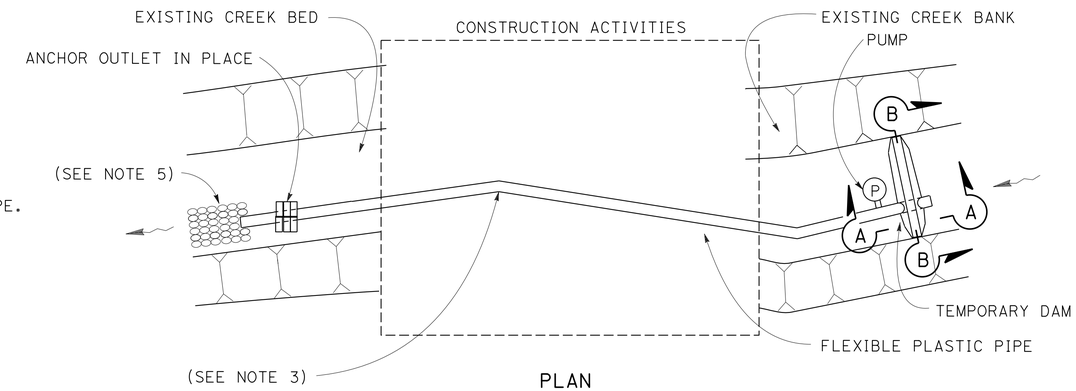

PLAN

TYPICAL TEMPORARY CREEK DIVERSION SYSTEM

HYDROLOGIC SUMMARY

CONSTRUCTION WINDOW	PIPE Dia.
JUN 15 - OCT 15	12" *

* THIS VALUE WILL VARY DEPENDING ON WATER YEAR.

DRAINAGE SYSTEM No.	LOCATION PM
25	21.80
31	27.54
44	36.63
48	39.88

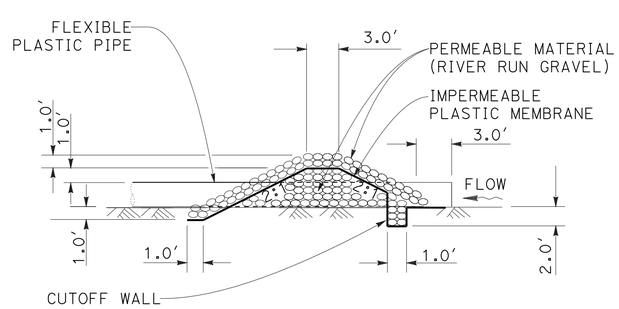

TEMPORARY DAM (TYPE 1)
SECTION A-A

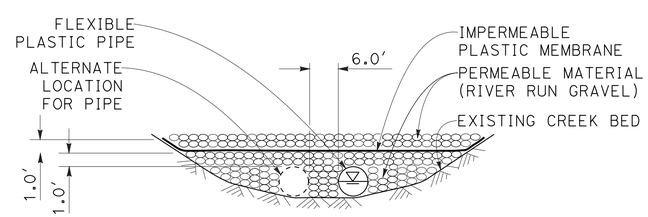

TEMPORARY DAM (TYPE 1)
SECTION B-B

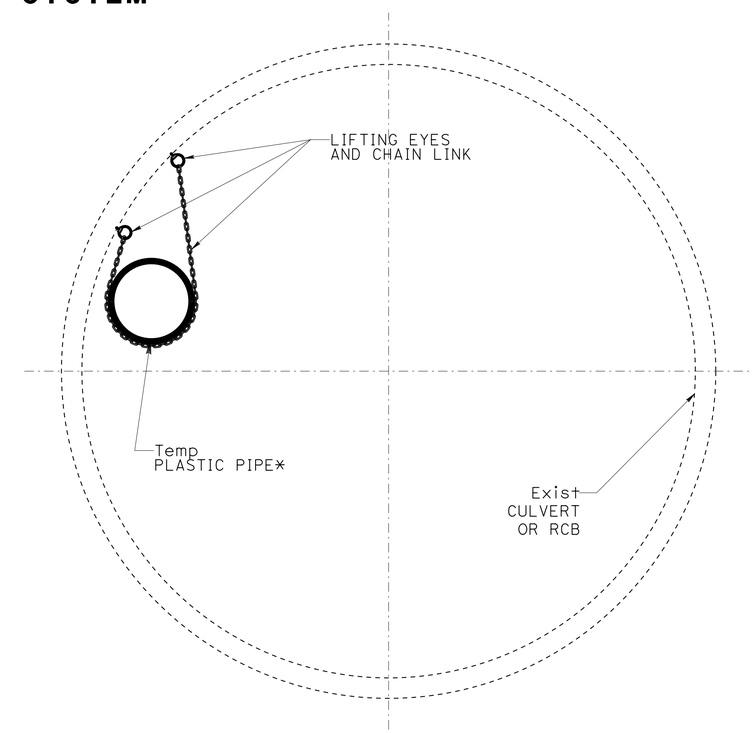

TYPICAL SECTION

Temp PLASTIC PIPE INSTALLED IN CSP/RCB

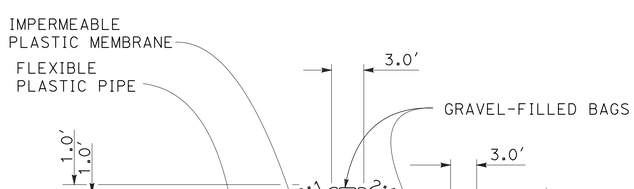

TEMPORARY DAM (TYPE 2)
SECTION A-A

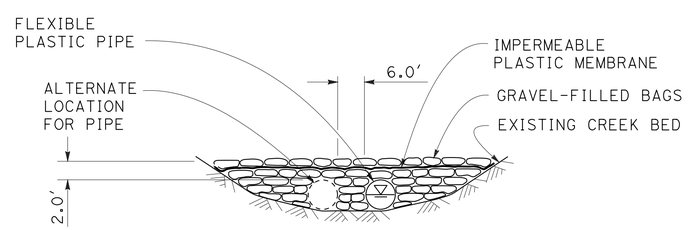

TEMPORARY DAM (TYPE 2)
SECTION B-B

TEMPORARY WATER POLUTION CONTROL DETAILS
(TEMPORARY CREEK DIVERSION SYSTEM)

NO SCALE

THIS PLAN ACCURATE FOR TEMPORARY WATER POLLUTION CONTROL WORK ONLY

WPCD-1

STATE OF CALIFORNIA - DEPARTMENT OF TRANSPORTATION
DIVISION OF ENGINEERING
Caltrans
FUNCTIONAL SUPERVISOR: ROBERT E. POLGAR
CALCULATED-DESIGNED BY: LARISA V. SASEVICH
CHECKED BY: MARTIN GARCIA
REVISED BY
DATE REVISED

LAST REVISION 06-24-13
DATE PLOTTED => 07-AUG-2013
TIME PLOTTED => 14:56

Dist	COUNTY	ROUTE	POST MILES TOTAL PROJECT	SHEET No.	TOTAL SHEETS
01	Men	128	Var	5	106

Larisa V. Sasevich 6-24-13
REGISTERED CIVIL ENGINEER DATE

6-24-13
PLANS APPROVAL DATE

REGISTERED PROFESSIONAL ENGINEER
LARISA V. SASEVICH
No. 71520
Exp. 12-31-13
CIVIL
STATE OF CALIFORNIA

THE STATE OF CALIFORNIA OR ITS OFFICERS OR AGENTS SHALL NOT BE RESPONSIBLE FOR THE ACCURACY OR COMPLETENESS OF SCANNED COPIES OF THIS PLAN SHEET.

WATER POLLUTION CONTROL QUANTITIES

DRAINAGE SYSTEM No.	PM	Temp DI PROTECTION	Temp FIBER ROLL	Temp SILT FENCE	Temp CULVERT	Temp Construction Entrance
		EA	LF			EA
1	14.30	2	36			
2	14.39			20		
3	14.61		32	20		
4	14.67	1				
5	14.80			20		
6	14.98			20		
7	15.14			26		
8	15.14DW		20	40		
9	15.62			20		
10	15.90			26		
11	16.63			30		
12	16.88			38		
13	16.91			20		
14	17.11		100	60		
15	17.22	1	30	20		
16	17.51			30		
17	OMITTED FROM CONTRACT					
18	18.28			38		
19	18.46		56	30		
20	18.88			33		
21	19.30		24	40		
22	19.36		50	40		
23	OMITTED FROM CONTRACT					
24	21.23		45	20		
25	21.80		320	150	60	1
26	21.96			30		
27	22.83		20	15		
28	22.97		30	20		
29	23.75	1				
30	24.55					
SYS 1-30 SUBTOTAL		5	763	806	60	1

DRAINAGE SYSTEM No.	PM	Temp DI PROTECTION	Temp FIBER ROLL	Temp SILT FENCE	Temp CULVERT	Temp Construction Entrance
		EA	LF			EA
31	27.54		80	120		1
32	30.06			20		
33	30.75			34		
34	30.82			24		
35	30.94			30		
36	30.97			30		
37	31.84		32	20		
38	31.86			24		
39	32.01		40	24		
40	33.23	1		20		
41	33.70			42		
42	33.78					
43	36.01	1		20		
44	36.63		80	80		1
45	OMITTED FROM CONTRACT					
46	39.22		16	22		
47	39.28		56	20		
48	39.88		100	120		1
49	40.24		30	20		
50	40.63			20		
51	41.38	1		20		
52	45.21		20	10		
53	45.25		20	10		
54	OMITTED FROM CONTRACT					
55	45.91			20		
56	49.28			20		
SYS 1-30 SUBTOTAL		5	763	806	60	1
SYS 31-56 SUBTOTAL		3	474	770		3
TOTAL		8	1237	1576	60	4

TEMPORARY WATER POLLUTION CONTROL QUANTITIES

WPCQ-1

STATE OF CALIFORNIA - DEPARTMENT OF TRANSPORTATION
Caltrans® DIVISION OF ENGINEERING

FUNCTIONAL SUPERVISOR: ROBERT E. POLGAR
CALCULATED-DESIGNED BY: LARISA V. SASEVICH
CHECKED BY: MARTIN GARCIA
REVISED BY
DATE REVISED

LAST REVISION 06-22-13
DATE PLOTTED => 07-AUG-2013
TIME PLOTTED => 14:56

Dist	COUNTY	ROUTE	POST MILES TOTAL PROJECT	SHEET No.	TOTAL SHEETS
01	Men	128	Var	6	106

Larisa V. Sasevich 6-24-13
REGISTERED CIVIL ENGINEER DATE

6-24-13
PLANS APPROVAL DATE

REGISTERED PROFESSIONAL ENGINEER LARISA V. SASEVICH No. C 71520 Exp. 12-31-13 CIVIL STATE OF CALIFORNIA

THE STATE OF CALIFORNIA OR ITS OFFICERS OR AGENTS SHALL NOT BE RESPONSIBLE FOR THE ACCURACY OR COMPLETENESS OF SCANNED COPIES OF THIS PLAN SHEET.

NOTES:

1. FOR ACCURATE RIGHT OF WAY DATA, CONTACT RIGHT OF WAY ENGINEERING AT THE DISTRICT OFFICE.
2. THIS PLAN ACCURATE FOR DRAINAGE WORK ONLY.
3. FOR ROCK SLOPE PROTECTION DETAILS SEE DRAINAGE DETAIL SHEETS.
4. THE ANGLE OF EACH ELBOW IS APPROXIMATE. THE EXACT ANGLE WILL BE DETERMINED IN THE FIELD BY THE ENGINEER.
5. DRAINAGE INLET SHALL BE SET TO PROFILE GRADE OF PAVEMENT.
6. FOR CONCRETE BACKFILL (PIPE TRENCH) DETAILS SEE DRAINAGE DETAIL SHEETS.
7. FOR LOW PIPE CLEARANCE DETAILS (MONOLITHIC POUR) SEE DRAINAGE DETAIL SHEETS.
8. PIPE STAKES FOR ANCHOR ASSEMBLY TO BE INSERTED THROUGH BRACKET WELDED TO DOWNDRAIN.
9. INLET AND/OR OUTLET STRUCTURE SKEW ANGLE IS MEASURED FROM A LINE PERPENDICULAR TO THE CULVERT ALIGNMENT.
10. LOCATIONS OF UTILITY FACILITIES SHOWN ON THESE PLANS ARE APPROXIMATE AND SHALL BE VERIFIED BY THE CONTRACTOR PRIOR TO CONSTRUCTION.
11. UTILITY OWNERSHIP ON THIS PROJECT:
    ELECTRICAL - PACIFIC GAS & ELECTRIC (PG&E Elect)
    TELEPHONE - AMERICAN TELEPHONE & TELEGRAPH (AT&T Tel)
    FIBER OPTIC - AMERICAN TELEPHONE & TELEGRAPH (AT&T FO)
    - LEVEL 3 COMMUNICATIONS (L3 FO)
12. ALL UTILITY ELEVATIONS SHOWN REFER TO THE TOP OF THE UTILITY CONDUIT UNLESS OTHERWISE INDICATED.
13. CONTRACTOR TO COORDINATE WITH THE ENGINEER TO PROTECT IN PLACE PG&E POLE.
14. THE ENGINEER IS TO BE CONTACTED A MINIMUM OF 10 WORKING DAYS PRIOR TO WORKING AT THIS LOCATION.

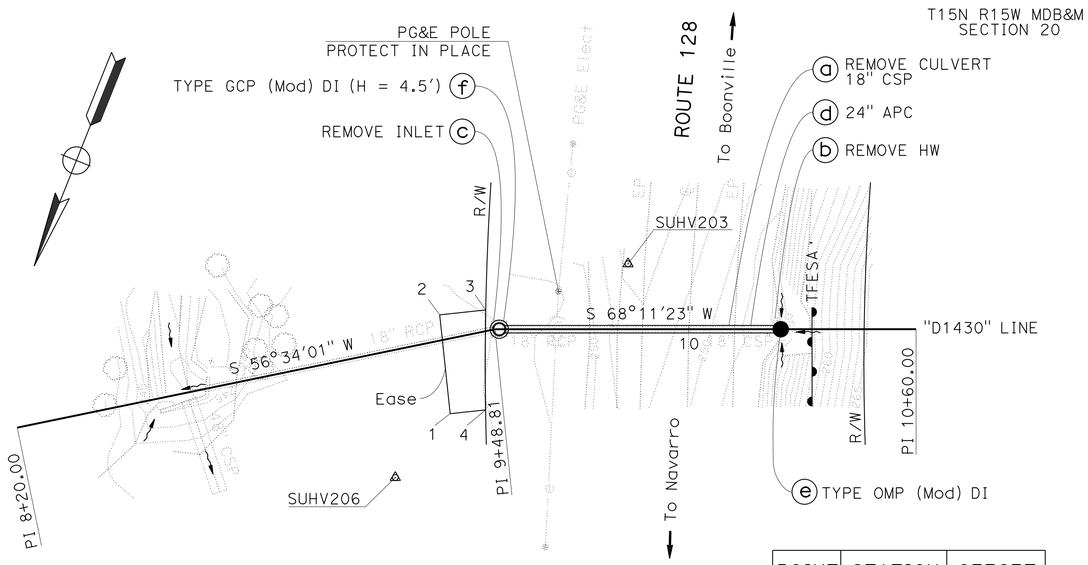

POINT	STATION	OFFSET
1	9+32.73	19.45' R+
2	9+35.28	6.67' L+
3	9+47.44	5.49' L+
4	9+42.09	20.36' R+

DRAINAGE SYSTEM (1)
ROUTE 128
PM 14.30
SCALE: 1" = 20'

LEGEND:

- (X) DRAINAGE SYSTEM No.
- (x) DRAINAGE UNIT
- ROCK SLOPE PROTECTION
- CULVERT INVERT MIX
- Temp FENCE (TYPE ESA)
- Conc Bkf (PIPE TRENCH)

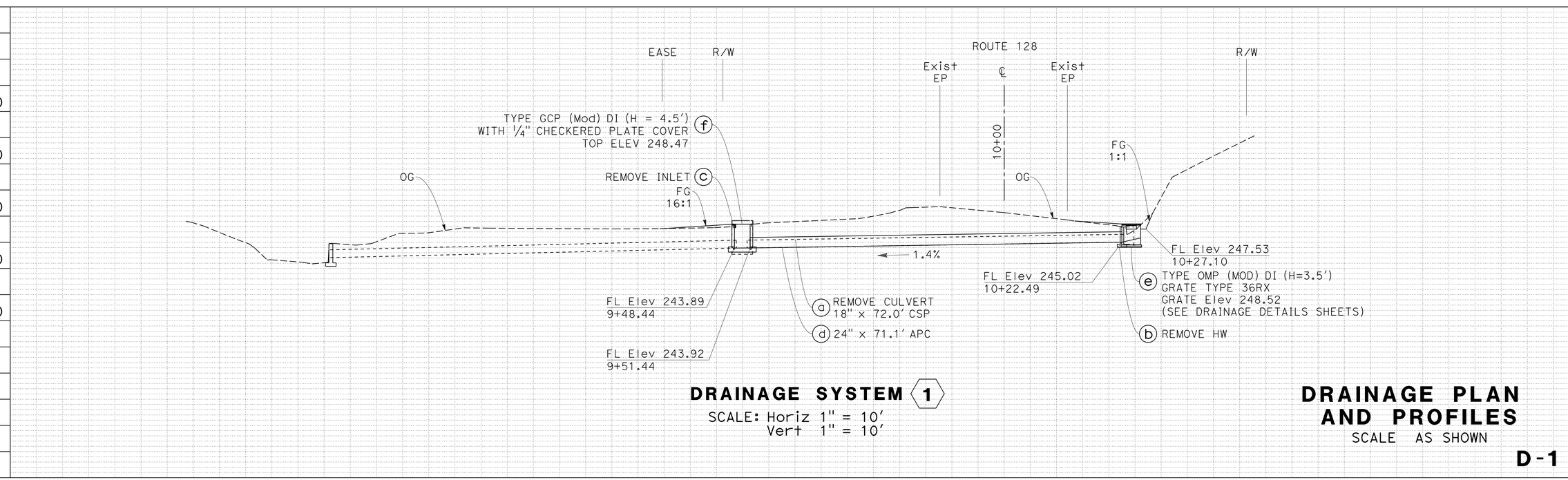

DRAINAGE SYSTEM (1)
SCALE: Horiz 1" = 10'
Vert 1" = 10'

DRAINAGE PLAN AND PROFILES

SCALE AS SHOWN

D-1

STATE OF CALIFORNIA - DEPARTMENT OF TRANSPORTATION
Caltrans® DIVISION OF ENGINEERING

FUNCTIONAL SUPERVISOR: ROBERT E. POLGAR
CALCULATED-DESIGNED BY: LARISA V. SASEVICH
CHECKED BY: TIMOTHY TRINH
REVISED BY / DATE REVISED

LAST REVISION 03-30-11
DATE PLOTTED => 07-AUG-2013
TIME PLOTTED => 14:56

Dist	COUNTY	ROUTE	POST MILES TOTAL PROJECT	SHEET No.	TOTAL SHEETS
01	Men	128	Var	7	106

Robert E. Polgar 6-24-13
REGISTERED CIVIL ENGINEER DATE

6-24-13
PLANS APPROVAL DATE

REGISTERED PROFESSIONAL ENGINEER ROBERT E POLGAR No. C 51768 Exp. 6-30-14 CIVIL STATE OF CALIFORNIA

THE STATE OF CALIFORNIA OR ITS OFFICERS OR AGENTS SHALL NOT BE RESPONSIBLE FOR THE ACCURACY OR COMPLETENESS OF SCANNED COPIES OF THIS PLAN SHEET.

T15N R15W MDB&M
SECTION 20

NOTES:
1. FOR ACCURATE RIGHT OF WAY DATA, CONTACT RIGHT OF WAY ENGINEERING AT THE DISTRICT OFFICE.
2. THIS PLAN ACCURATE FOR DRAINAGE WORK ONLY.

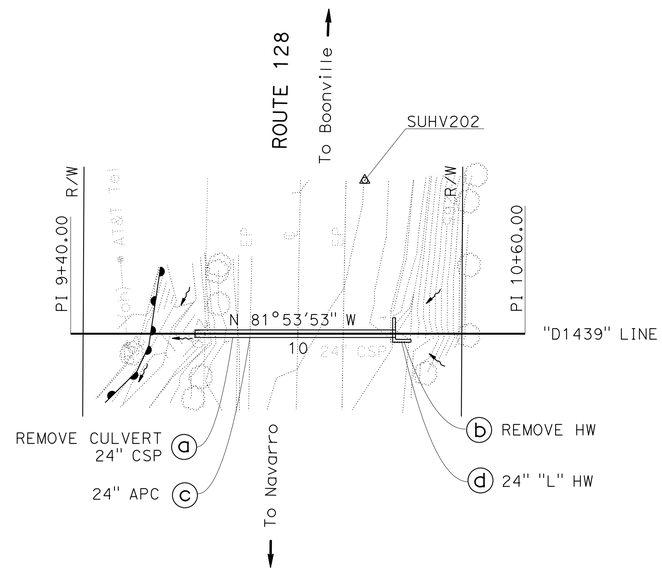

DRAINAGE SYSTEM 2
ROUTE 128
PM 14.39
SCALE: 1" = 20'

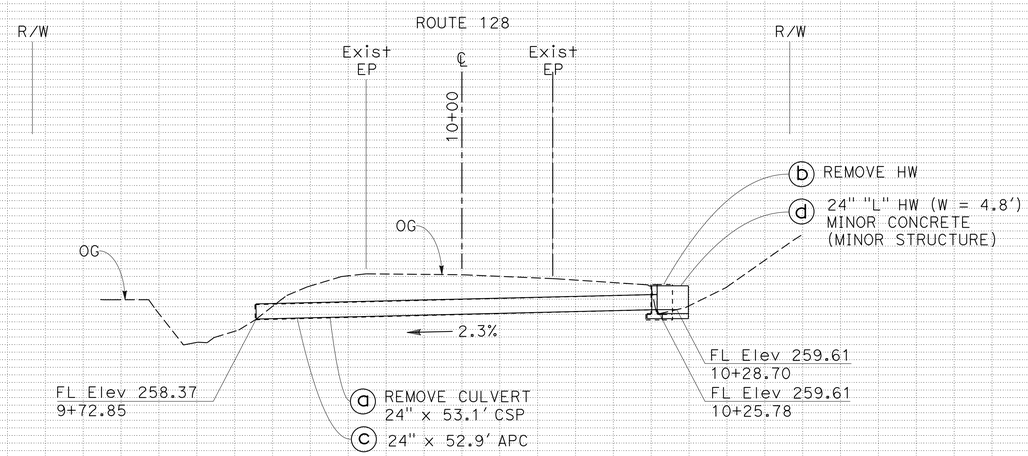

DRAINAGE SYSTEM 2
SCALE: Horiz 1" = 10'
Vert 1" = 10'

DRAINAGE PLAN AND PROFILES
SCALE AS SHOWN

D-2

Station	9+00	9+20	9+40	9+60	9+80	10+00	10+20	10+40	10+60	10+80	11+00
CY Exc											
CY Emb											

REVISED BY | DATE REVISED
ROBERT E. POLGAR | TIMOTHY TRINH
CALCULATED-DESIGNED BY | CHECKED BY
FUNCTIONAL SUPERVISOR: ROBERT E. POLGAR

STATE OF CALIFORNIA - DEPARTMENT OF TRANSPORTATION
Caltrans® DIVISION OF ENGINEERING

LAST REVISION 03-30-11
DATE PLOTTED => 07-AUG-2013
TIME PLOTTED => 14:56

Dist	COUNTY	ROUTE	POST MILES TOTAL PROJECT	SHEET No.	TOTAL SHEETS
01	Men	128	Var	8	106

Robert E. Polgar 6-24-13
REGISTERED CIVIL ENGINEER DATE

6-24-13
PLANS APPROVAL DATE

REGISTERED PROFESSIONAL ENGINEER ROBERT E. POLGAR No. C 51768 Exp. 6-30-14 CIVIL STATE OF CALIFORNIA

THE STATE OF CALIFORNIA OR ITS OFFICERS OR AGENTS SHALL NOT BE RESPONSIBLE FOR THE ACCURACY OR COMPLETENESS OF SCANNED COPIES OF THIS PLAN SHEET.

T15N R15W MDB&M
SECTION 20

NOTES:
1. FOR ACCURATE RIGHT OF WAY DATA, CONTACT RIGHT OF WAY ENGINEERING AT THE DISTRICT OFFICE.
2. THIS PLAN ACCURATE FOR DRAINAGE WORK ONLY.
3. FOR CONCRETE BACKFILL (PIPE TRENCH) DETAILS SEE DRAINAGE DETAIL SHEETS.
4. INLET STRUCTURE SKEW ANGLE IS MEASURED FROM A LINE PERPENDICULAR TO THE CULVERT ALIGNMENT.

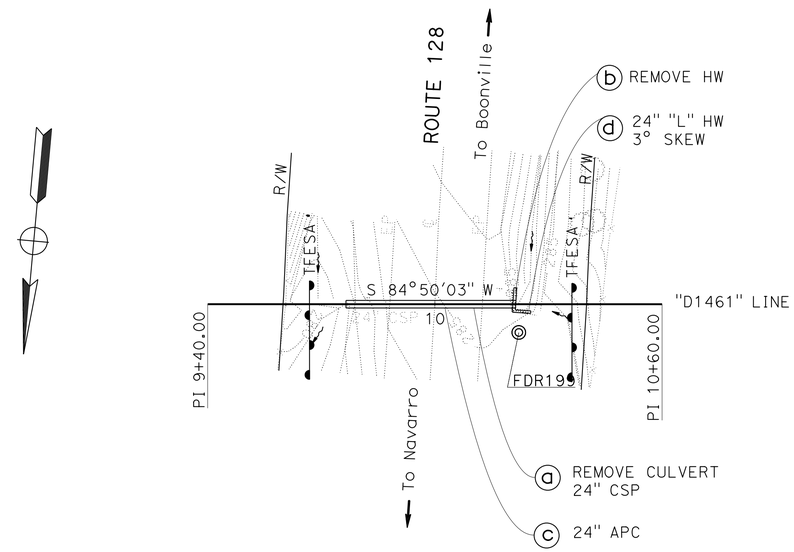

DRAINAGE SYSTEM (3)
ROUTE 128
PM 14.61
SCALE: 1" = 20'

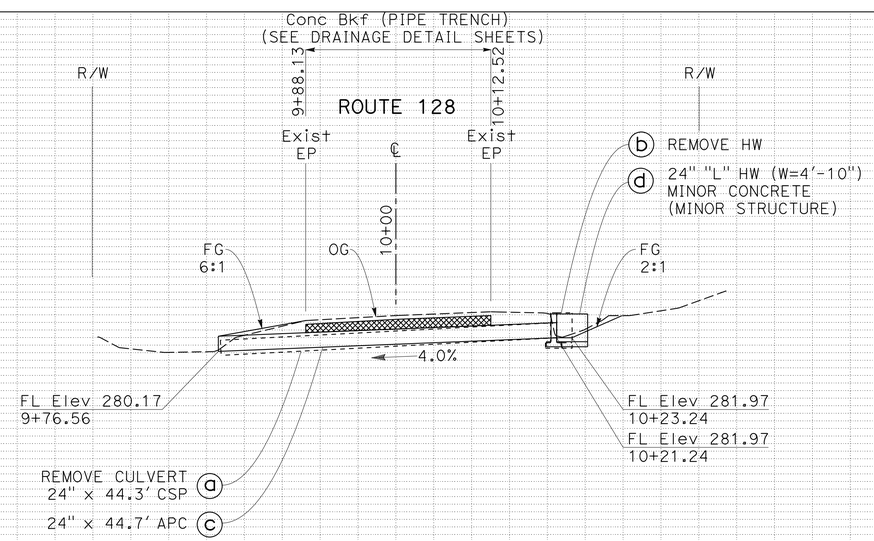

DRAINAGE SYSTEM (3)
SCALE: Horiz 1" = 10'
Vert 1" = 10'

DRAINAGE PLAN AND PROFILES
SCALE AS SHOWN

D-3

Station 9+00 9+20 9+40 9+60 9+80 10+00 10+20 10+40 10+60 10+80 11+00

CY Exc
Emb

STATE OF CALIFORNIA - DEPARTMENT OF TRANSPORTATION
Caltrans® DIVISION OF ENGINEERING
FUNCTIONAL SUPERVISOR ROBERT E. POLGAR
CALCULATED-DESIGNED BY ROBERT E. POLGAR
CHECKED BY TIMOTHY TRINH
REVISED BY
DATE REVISED

LAST REVISION 03-30-11
DATE PLOTTED => 07-AUG-2013
TIME PLOTTED => 14:56

Dist	COUNTY	ROUTE	POST MILES TOTAL PROJECT	SHEET No.	TOTAL SHEETS
01	Men	128	Var	9	106

Larisa V. Sasevich 6-24-13
REGISTERED CIVIL ENGINEER DATE

6-24-13
PLANS APPROVAL DATE

REGISTERED PROFESSIONAL ENGINEER LARISA V. SASEVICH No. C 71520 Exp. 12-31-13 CIVIL STATE OF CALIFORNIA

THE STATE OF CALIFORNIA OR ITS OFFICERS OR AGENTS SHALL NOT BE RESPONSIBLE FOR THE ACCURACY OR COMPLETENESS OF SCANNED COPIES OF THIS PLAN SHEET.

T15N R15W MDB&M
SECTION 20

NOTES:
1. FOR ACCURATE RIGHT OF WAY DATA, CONTACT RIGHT OF WAY ENGINEERING AT THE DISTRICT OFFICE.
2. THIS PLAN ACCURATE FOR DRAINAGE WORK ONLY.

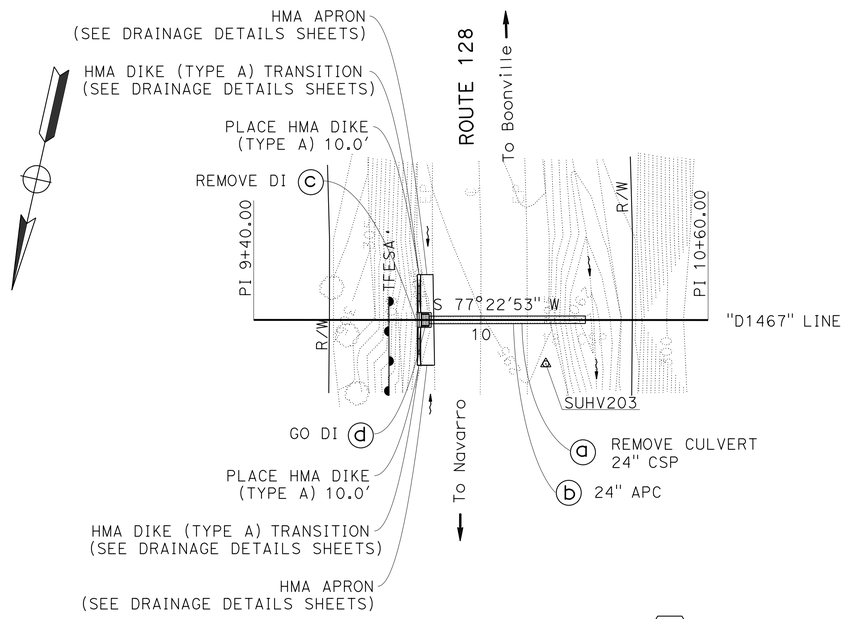

DRAINAGE SYSTEM 4
ROUTE 128
PM 14.67
SCALE: 1" = 20'

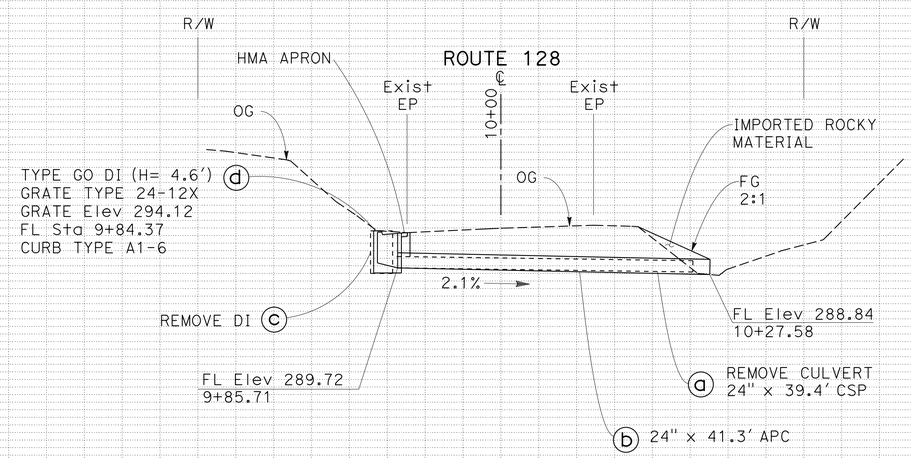

DRAINAGE SYSTEM 4
SCALE: Horiz 1" = 10'
Vert 1" = 10'

DRAINAGE PLAN AND PROFILES
SCALE AS SHOWN
D-4

Station	9+00	9+20	9+40	9+60	9+80	10+00	10+20	10+40	10+60	10+80	11+00
CY Exc											
CY Emb											

310 300 290 280

STATE OF CALIFORNIA - DEPARTMENT OF TRANSPORTATION
Caltrans® DIVISION OF ENGINEERING
FUNCTIONAL SUPERVISOR: ROBERT E. POLGAR
CALCULATED-DESIGNED BY: LARISA V. SASEVICH
CHECKED BY: TIMOTHY TRINH
REVISED BY / DATE REVISED

LAST REVISION 03-30-11
DATE PLOTTED => 07-AUG-2013
TIME PLOTTED => 14:56

Dist	COUNTY	ROUTE	POST MILES TOTAL PROJECT	SHEET No.	TOTAL SHEETS
01	Men	128	Var	10	106

Larisa V. Sasevich 6-24-13
REGISTERED CIVIL ENGINEER DATE

6-24-13
PLANS APPROVAL DATE

REGISTERED PROFESSIONAL ENGINEER LARISA V. SASEVICH No. C 71520 Exp. 12-31-13 CIVIL STATE OF CALIFORNIA

THE STATE OF CALIFORNIA OR ITS OFFICERS OR AGENTS SHALL NOT BE RESPONSIBLE FOR THE ACCURACY OR COMPLETENESS OF SCANNED COPIES OF THIS PLAN SHEET.

T15N R15W MDB&M
SECTION 20

NOTES:
1. FOR ACCURATE RIGHT OF WAY DATA, CONTACT RIGHT OF WAY ENGINEERING AT THE DISTRICT OFFICE.
2. THIS PLAN ACCURATE FOR DRAINAGE WORK ONLY.

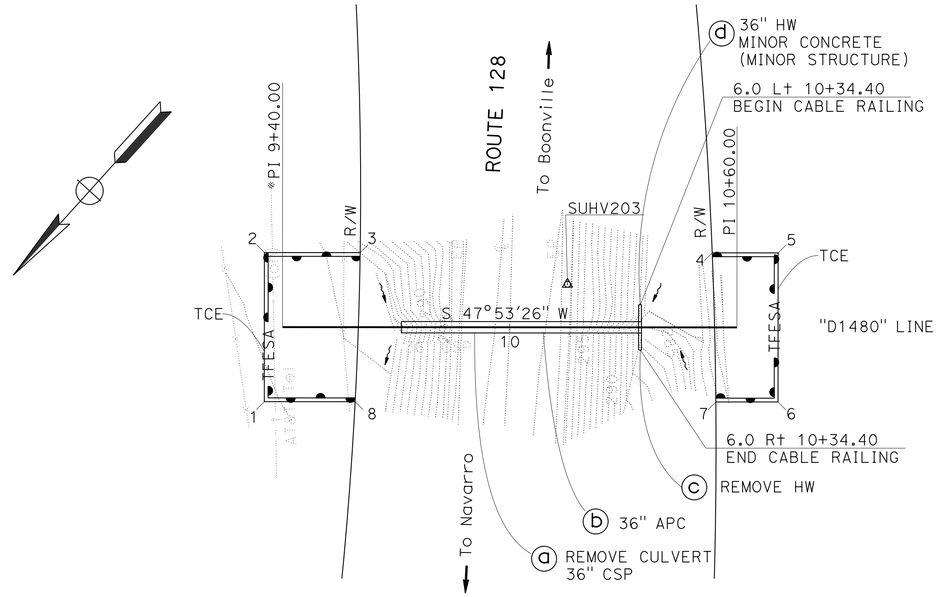

DRAINAGE SYSTEM 5
ROUTE 128
PM 14.80
SCALE: 1" = 20'

POINT	STATION	OFFSET
1	9+35.21	19.69' Rt
2	9+35.21	19.69' Lt
3	9+60.50	19.69' Lt
4	10+53.47	19.69' Lt
5	10+70.87	19.69' Lt
6	10+70.87	19.69' Rt
7	10+54.45	19.69' Rt
8	9+59.20	19.69' Rt

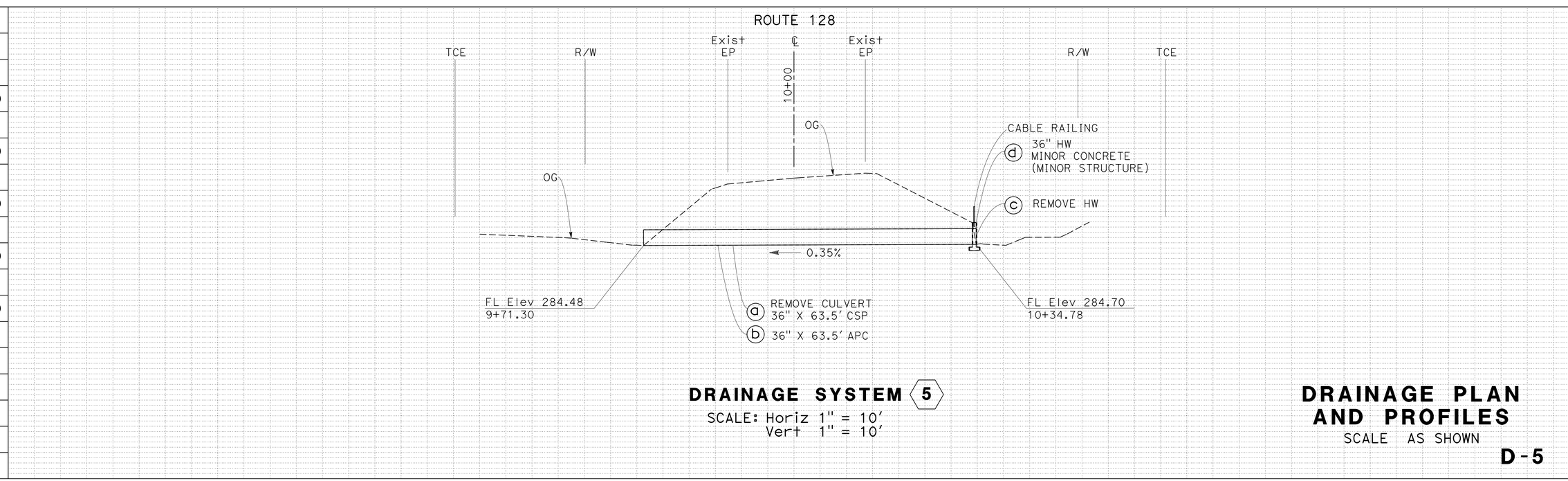

DRAINAGE SYSTEM 5
SCALE: Horiz 1" = 10'
Vert 1" = 10'

DRAINAGE PLAN AND PROFILES
SCALE AS SHOWN
D-5

STATE OF CALIFORNIA - DEPARTMENT OF TRANSPORTATION
Caltrans® DIVISION OF ENGINEERING
FUNCTIONAL SUPERVISOR: ROBERT E. POLGAR
CALCULATED-DESIGNED BY: LARISA V. SASEVICH
CHECKED BY: TIMOTHY TRINH
REVISED BY / DATE REVISED

LAST REVISION 03-30-11
DATE PLOTTED => 07-AUG-2013
TIME PLOTTED => 14:56

Dist	COUNTY	ROUTE	POST MILES TOTAL PROJECT	SHEET No.	TOTAL SHEETS
01	Men	128	Var	11	106

Larisa V. Sasevich 6-24-13
REGISTERED CIVIL ENGINEER DATE

6-24-13
PLANS APPROVAL DATE

REGISTERED PROFESSIONAL ENGINEER LARISA V. SASEVICH No. C 71520 Exp. 12-31-13 CIVIL STATE OF CALIFORNIA

THE STATE OF CALIFORNIA OR ITS OFFICERS OR AGENTS SHALL NOT BE RESPONSIBLE FOR THE ACCURACY OR COMPLETENESS OF SCANNED COPIES OF THIS PLAN SHEET.

T15N R15W MDB&M
SECTION 20

NOTES:
1. FOR ACCURATE RIGHT OF WAY DATA, CONTACT RIGHT OF WAY ENGINEERING AT THE DISTRICT OFFICE.
2. THIS PLAN ACCURATE FOR DRAINAGE WORK ONLY.
3. INLET STRUCTURE SKEW ANGLE IS MEASURED FROM A LINE PERPENDICULAR TO THE CULVERT ALIGNMENT.

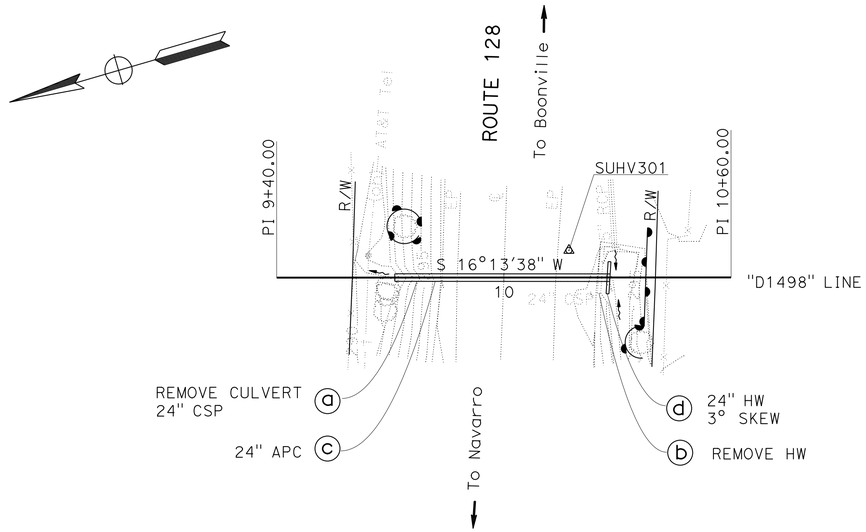

DRAINAGE SYSTEM 6
ROUTE 128
PM 14.98
SCALE: 1" = 20'

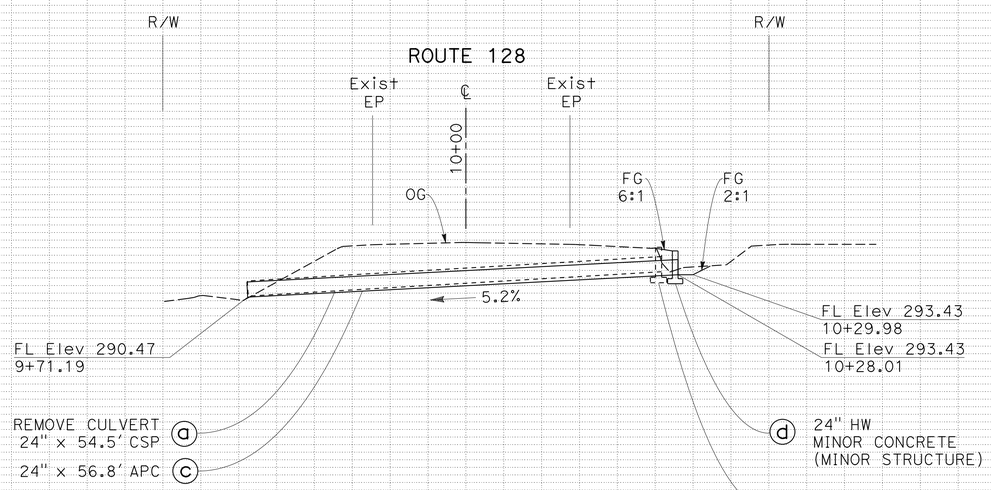

DRAINAGE SYSTEM 6
SCALE: Horiz 1" = 10'
Vert 1" = 10'

DRAINAGE PLAN AND PROFILES
SCALE AS SHOWN
D-6

Station	9+00	9+20	9+40	9+60	9+80	10+00	10+20	10+40	10+60	10+80	11+00
CY Exc											
CY Emb											

REVISED BY | DATE REVISED
LARISA V. SASEVICH | TIMOTHY TRINH
CALCULATED-DESIGNED BY | CHECKED BY
FUNCTIONAL SUPERVISOR: ROBERT E. POLGAR
STATE OF CALIFORNIA - DEPARTMENT OF TRANSPORTATION
Caltrans® DIVISION OF ENGINEERING

LAST REVISION 03-30-11
DATE PLOTTED => 07-AUG-2013
TIME PLOTTED => 14:56

Dist	COUNTY	ROUTE	POST MILES TOTAL PROJECT	SHEET No.	TOTAL SHEETS
01	Men	128	Var	12	106

Larisa V. Sasevich 6-24-13
REGISTERED CIVIL ENGINEER DATE

6-24-13
PLANS APPROVAL DATE

REGISTERED PROFESSIONAL ENGINEER LARISA V. SASEVICH No. C 71520 Exp. 12-31-13 CIVIL STATE OF CALIFORNIA

THE STATE OF CALIFORNIA OR ITS OFFICERS OR AGENTS SHALL NOT BE RESPONSIBLE FOR THE ACCURACY OR COMPLETENESS OF SCANNED COPIES OF THIS PLAN SHEET.

T15N R15W MDB&M
SECTION 20

NOTES:
1. FOR ACCURATE RIGHT OF WAY DATA, CONTACT RIGHT OF WAY ENGINEERING AT THE DISTRICT OFFICE.
2. THIS PLAN ACCURATE FOR DRAINAGE WORK ONLY.

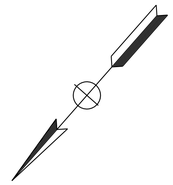

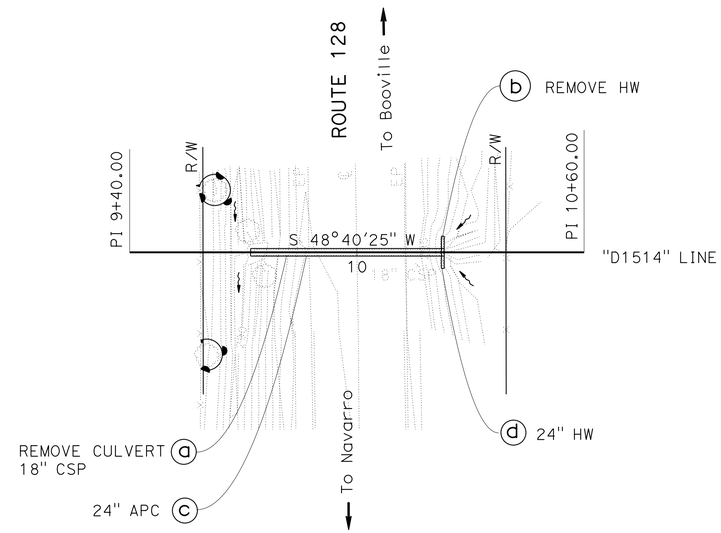

DRAINAGE SYSTEM 7
ROUTE 128
PM 15.14
SCALE: 1" = 20'

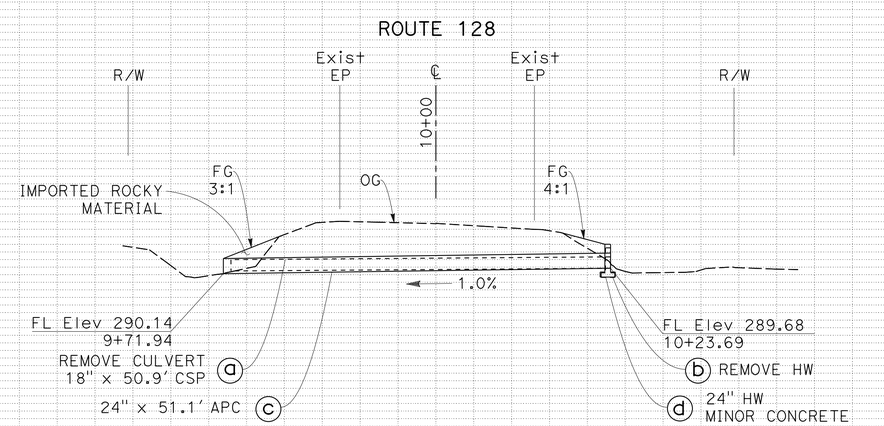

DRAINAGE SYSTEM 7
SCALE: Horiz 1" = 10'
Vert 1" = 10'

DRAINAGE PLAN AND PROFILES

SCALE AS SHOWN

D-7

Station	9+00	9+20	9+40	9+60	9+80	10+00	10+20	10+40	10+60	10+80	11+00
CY Exc											
CY Emb											

STATE OF CALIFORNIA - DEPARTMENT OF TRANSPORTATION
Caltrans® DIVISION OF ENGINEERING

FUNCTIONAL SUPERVISOR: ROBERT E. POLGAR
CALCULATED-DESIGNED BY: LARISA V. SASEVICH
CHECKED BY: TIMOTHY TRINH
REVISED BY / DATE REVISED

LAST REVISION 06-22-13
DATE PLOTTED => 07-AUG-2013
TIME PLOTTED => 14:57

Dist	COUNTY	ROUTE	POST MILES TOTAL PROJECT	SHEET No.	TOTAL SHEETS
01	Men	128	Var	13	106

Larisa V. Sasevich 6-24-13
REGISTERED CIVIL ENGINEER DATE

6-24-13
PLANS APPROVAL DATE

REGISTERED PROFESSIONAL ENGINEER LARISA V. SASEVICH No. C 71520 Exp. 12-31-13 CIVIL STATE OF CALIFORNIA

THE STATE OF CALIFORNIA OR ITS OFFICERS OR AGENTS SHALL NOT BE RESPONSIBLE FOR THE ACCURACY OR COMPLETENESS OF SCANNED COPIES OF THIS PLAN SHEET.

NOTES:
1. FOR ACCURATE RIGHT OF WAY DATA, CONTACT RIGHT OF WAY ENGINEERING AT THE DISTRICT OFFICE.
2. THIS PLAN ACCURATE FOR DRAINAGE WORK ONLY.

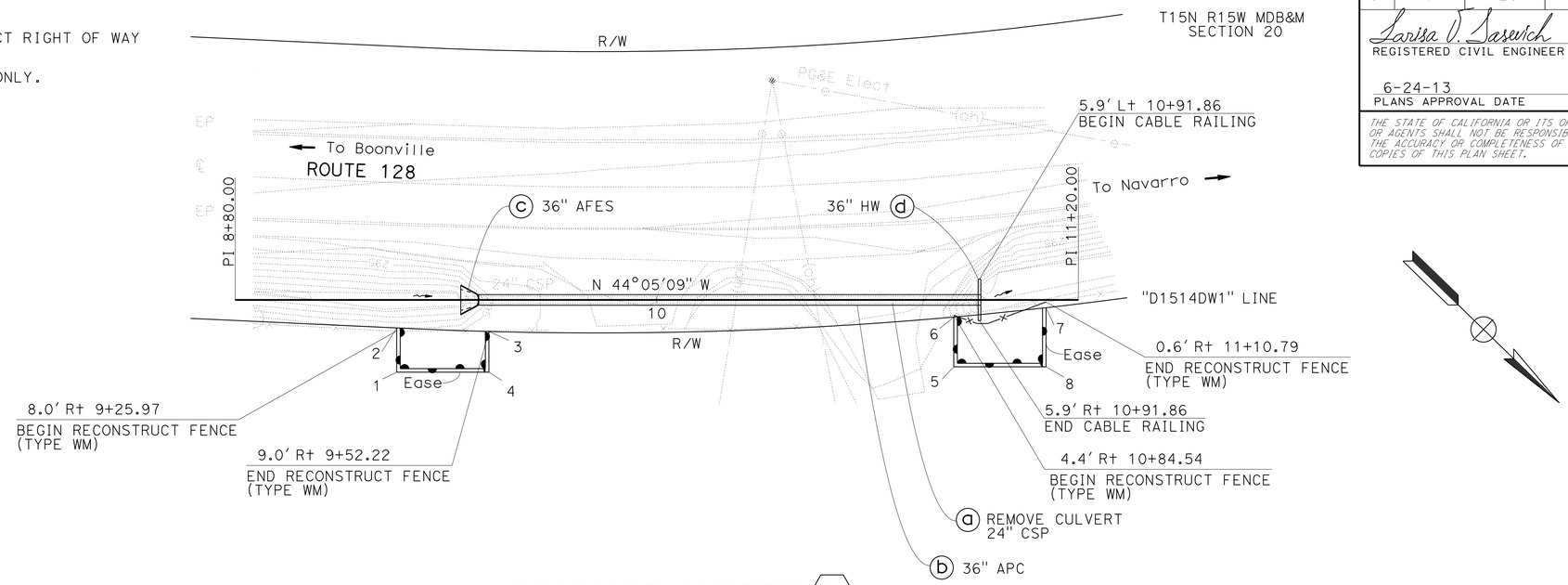

POINT	STATION	OFFSET
1	9+25.97	20.54' Rt
2	9+25.97	7.97' Rt
3	9+52.22	8.97' Rt
4	9+52.22	20.54' Rt
5	10+84.54	19.02' Rt
6	10+84.54	4.87' Rt
7	11+10.79	2.22 Rt
8	11+10.79	19.02' Rt

DRAINAGE SYSTEM 8
ROUTE 128
PM 15.14 (DRIVEWAYS)
SCALE: 1" = 20'

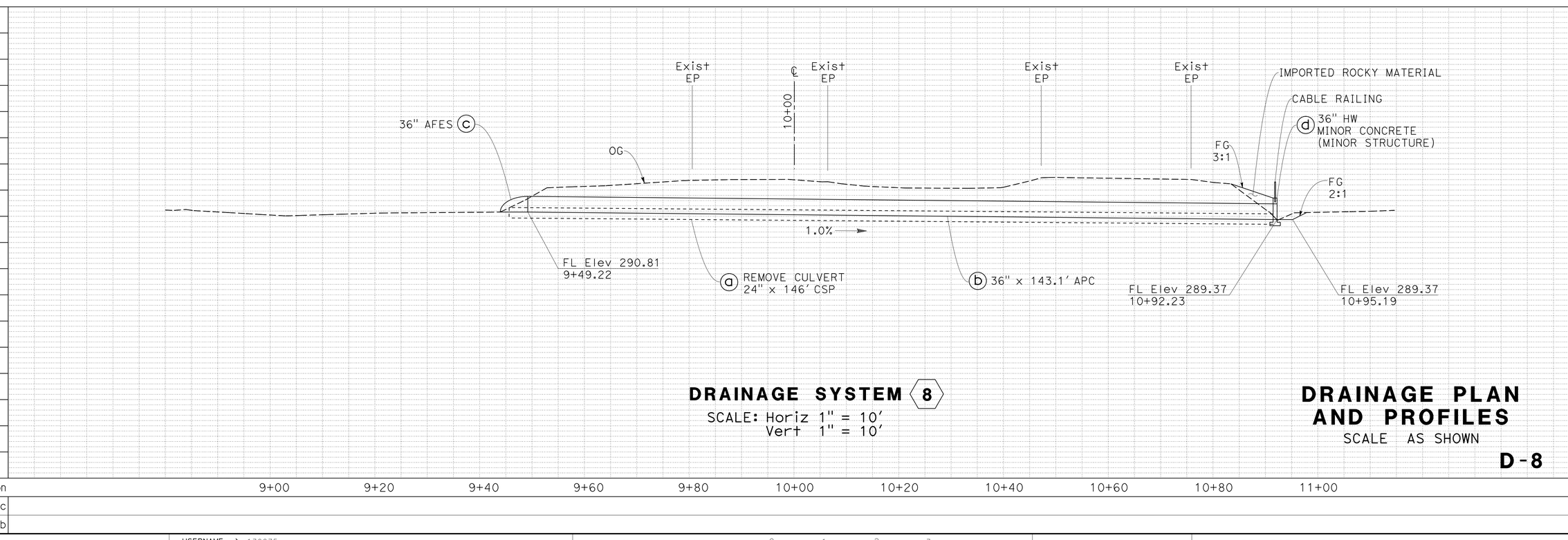

DRAINAGE SYSTEM 8
SCALE: Horiz 1" = 10'
Vert 1" = 10'

DRAINAGE PLAN AND PROFILES
SCALE AS SHOWN

D-8

REVISED BY | DATE REVISED
LARISA V. SASEVICH | TIMOTHY TRINH
CALCULATED-DESIGNED BY | CHECKED BY
FUNCTIONAL SUPERVISOR: ROBERT E. POLGAR

STATE OF CALIFORNIA - DEPARTMENT OF TRANSPORTATION
Caltrans® DIVISION OF ENGINEERING

LAST REVISION 02-16-11
DATE PLOTTED => 07-AUG-2013
TIME PLOTTED => 14:57

Dist	COUNTY	ROUTE	POST MILES TOTAL PROJECT	SHEET No.	TOTAL SHEETS
01	Men	128	Var	14	106

Larisa V. Sasevich 6-24-13
REGISTERED CIVIL ENGINEER DATE

6-24-13
PLANS APPROVAL DATE

REGISTERED PROFESSIONAL ENGINEER LARISA V. SASEVICH No. C 71520 Exp. 12-31-13 CIVIL STATE OF CALIFORNIA

THE STATE OF CALIFORNIA OR ITS OFFICERS OR AGENTS SHALL NOT BE RESPONSIBLE FOR THE ACCURACY OR COMPLETENESS OF SCANNED COPIES OF THIS PLAN SHEET.

T15N R15W MDB&M
SECTION 29

NOTES:
1. FOR ACCURATE RIGHT OF WAY DATA, CONTACT RIGHT OF WAY ENGINEERING AT THE DISTRICT OFFICE.
2. THIS PLAN ACCURATE FOR DRAINAGE WORK ONLY.
3. FOR CONCRETE BACKFILL (PIPE TRENCH) DETAILS SEE DRAINAGE DETAILS SHEETS.

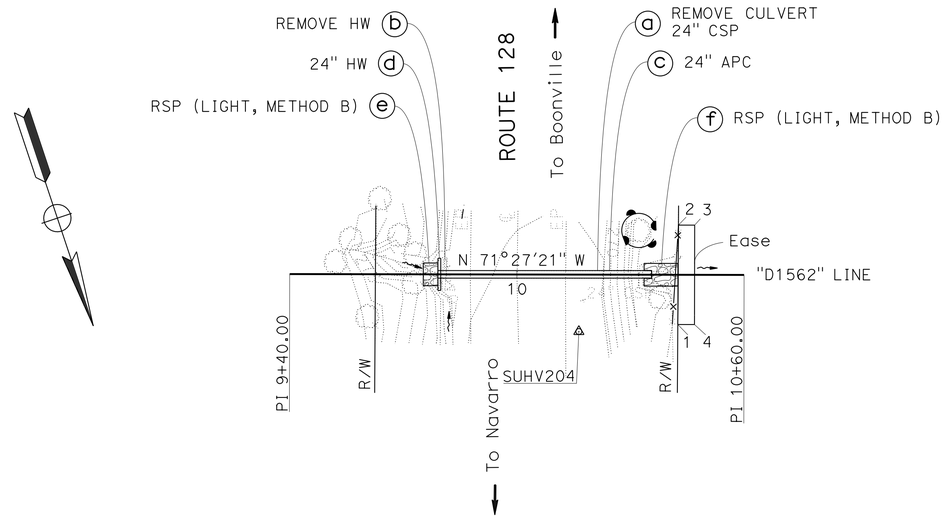

POINT	STATION	OFFSET
1	10+42.52	13.12' Lt
2	10+42.64	13.12' Rt
3	10+46.93	13.13' Rt
4	10+46.92	13.12' Lt

DRAINAGE SYSTEM (9)
ROUTE 128
PM 15.62
SCALE: 1" = 20'

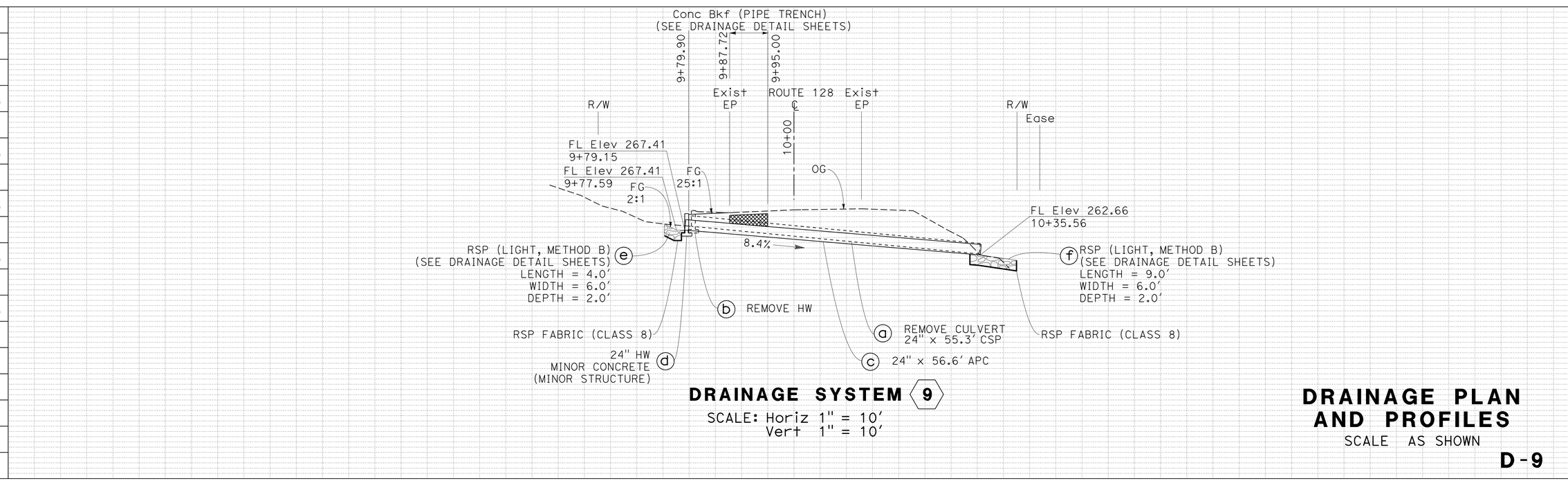

DRAINAGE SYSTEM (9)
SCALE: Horiz 1" = 10'
Vert 1" = 10'

DRAINAGE PLAN AND PROFILES
SCALE AS SHOWN

D-9

STATE OF CALIFORNIA - DEPARTMENT OF TRANSPORTATION
Caltrans® DIVISION OF ENGINEERING

FUNCTIONAL SUPERVISOR: ROBERT E. POLGAR
CALCULATED-DESIGNED BY: LARISA V. SASEVICH
CHECKED BY: R SCOTT FOSTER
REVISED BY
DATE REVISED

LAST REVISION 06-19-13
DATE PLOTTED => 07-AUG-2013
TIME PLOTTED => 14:57

Dist	COUNTY	ROUTE	POST MILES TOTAL PROJECT	SHEET No.	TOTAL SHEETS
01	Men	128	Var	15	106

Larisa V. Sasevich 6-24-13
REGISTERED CIVIL ENGINEER DATE

6-24-13
PLANS APPROVAL DATE

REGISTERED PROFESSIONAL ENGINEER LARISA V. SASEVICH No. C 71520 Exp. 12-31-13 CIVIL STATE OF CALIFORNIA

THE STATE OF CALIFORNIA OR ITS OFFICERS OR AGENTS SHALL NOT BE RESPONSIBLE FOR THE ACCURACY OR COMPLETENESS OF SCANNED COPIES OF THIS PLAN SHEET.

T15N R15W MDB&M
SECTION 29

NOTES:

1. FOR ACCURATE RIGHT OF WAY DATA, CONTACT RIGHT OF WAY ENGINEERING AT THE DISTRICT OFFICE.
2. THIS PLAN ACCURATE FOR DRAINAGE WORK ONLY.

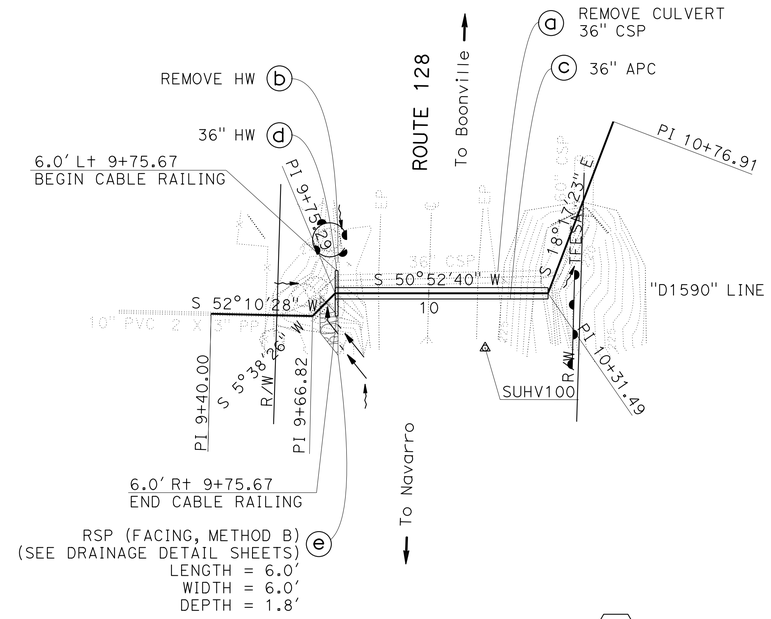

DRAINAGE SYSTEM 10

ROUTE 128
PM 15.90
SCALE: 1" = 20'

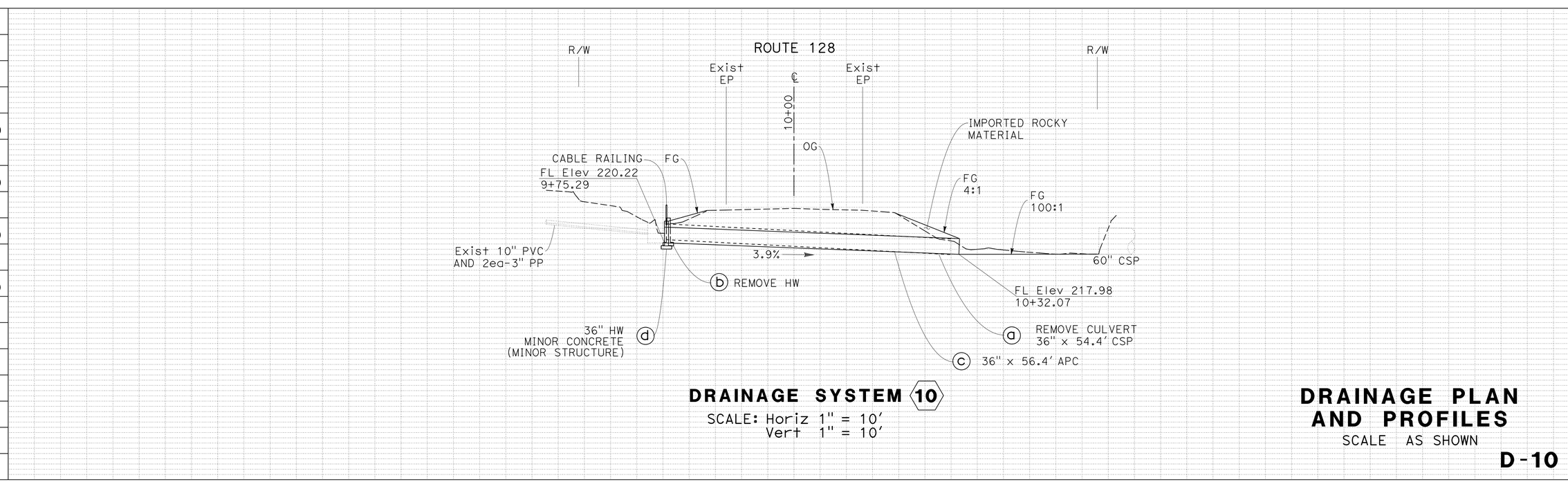

DRAINAGE SYSTEM 10

SCALE: Horiz 1" = 10'
Vert 1" = 10'

DRAINAGE PLAN AND PROFILES

SCALE AS SHOWN

D-10

REVISED BY | DATE REVISED
LARISA V. SASEVICH | R SCOTT FOSTER
CALCULATED-DESIGNED BY | CHECKED BY
FUNCTIONAL SUPERVISOR: ROBERT E. POLGAR

STATE OF CALIFORNIA - DEPARTMENT OF TRANSPORTATION
Caltrans® DIVISION OF ENGINEERING

LAST REVISION 06-19-13 | DATE PLOTTED => 07-AUG-2013 | TIME PLOTTED => 14:57

Dist	COUNTY	ROUTE	POST MILES TOTAL PROJECT	SHEET No.	TOTAL SHEETS
01	Men	128	Var	16	106

Larisa V. Sasevich 6-24-13
REGISTERED CIVIL ENGINEER DATE

6-24-13
PLANS APPROVAL DATE

REGISTERED PROFESSIONAL ENGINEER LARISA V. SASEVICH No. C 71520 Exp. 12-31-13 CIVIL STATE OF CALIFORNIA

THE STATE OF CALIFORNIA OR ITS OFFICERS OR AGENTS SHALL NOT BE RESPONSIBLE FOR THE ACCURACY OR COMPLETENESS OF SCANNED COPIES OF THIS PLAN SHEET.

T15N R15W MDB&M
SECTION 28

NOTES:

1. FOR ACCURATE RIGHT OF WAY DATA, CONTACT RIGHT OF WAY ENGINEERING AT THE DISTRICT OFFICE.
2. THIS PLAN ACCURATE FOR DRAINAGE WORK ONLY.

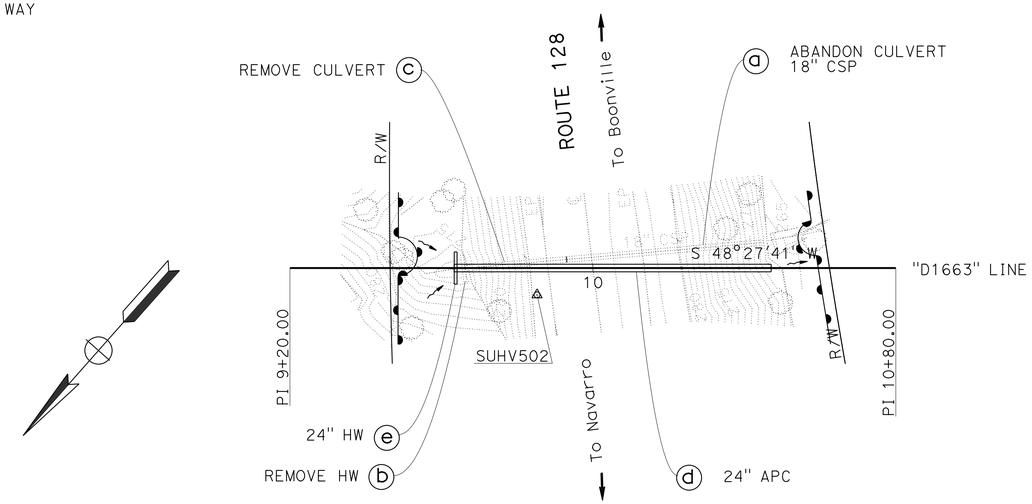

DRAINAGE SYSTEM (11)

ROUTE 128
PM 16.63
SCALE: 1" = 20'

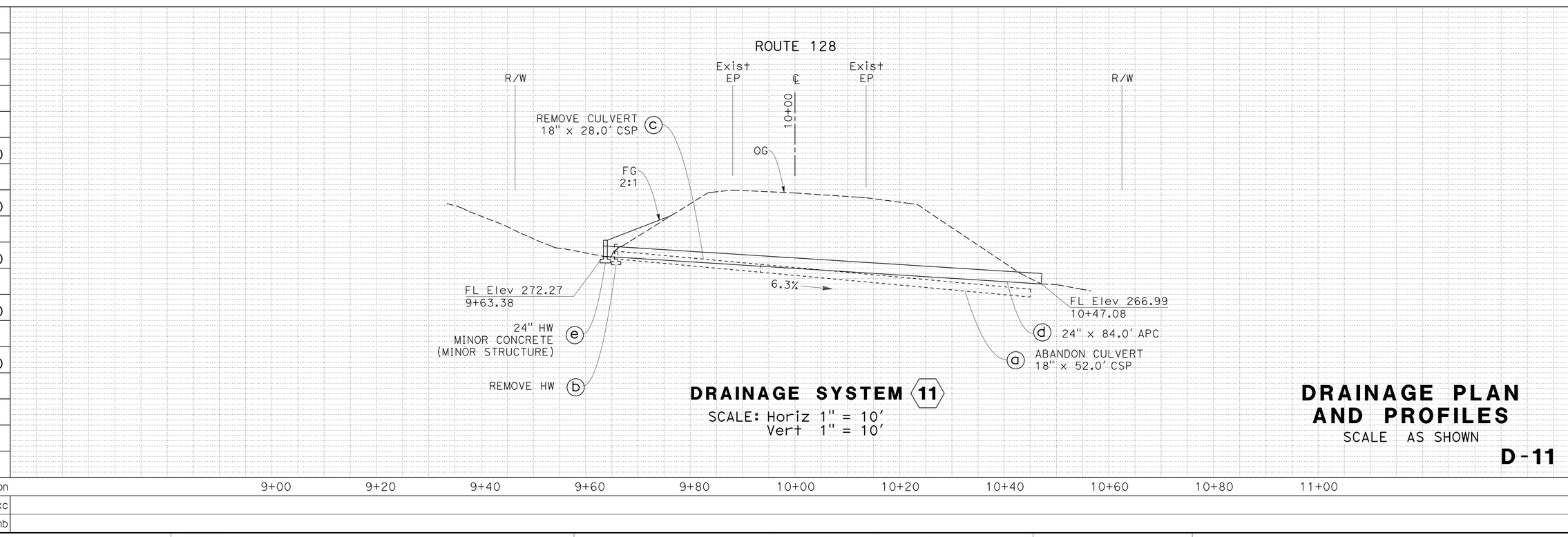

DRAINAGE SYSTEM (11)

SCALE: Horiz 1" = 10'
Vert 1" = 10'

DRAINAGE PLAN AND PROFILES

SCALE AS SHOWN

D-11

STATE OF CALIFORNIA - DEPARTMENT OF TRANSPORTATION
Caltrans® DIVISION OF ENGINEERING
FUNCTIONAL SUPERVISOR: ROBERT E. POLGAR
CALCULATED-DESIGNED BY: LARISA V. SASEVICH
CHECKED BY: TIMOTHY TRINH
REVISED BY / DATE REVISED

LAST REVISION 03-30-11
DATE PLOTTED => 07-AUG-2013
TIME PLOTTED => 14:57

Dist	COUNTY	ROUTE	POST MILES TOTAL PROJECT	SHEET No.	TOTAL SHEETS
01	Men	128	Var	17	106

Larisa V. Sasevich 6-24-13
REGISTERED CIVIL ENGINEER DATE

6-24-13
PLANS APPROVAL DATE

REGISTERED PROFESSIONAL ENGINEER LARISA V. SASEVICH No. C 71520 Exp. 12-31-13 CIVIL STATE OF CALIFORNIA

THE STATE OF CALIFORNIA OR ITS OFFICERS OR AGENTS SHALL NOT BE RESPONSIBLE FOR THE ACCURACY OR COMPLETENESS OF SCANNED COPIES OF THIS PLAN SHEET.

T15N R15W MDB&M
SECTION 33

NOTES:

1. FOR ACCURATE RIGHT OF WAY DATA, CONTACT RIGHT OF WAY ENGINEERING AT THE DISTRICT OFFICE.
2. THIS PLAN ACCURATE FOR DRAINAGE WORK ONLY.
3. FOR ROCK SLOPE PROTECTION DETAILS SEE DRAINAGE DETAIL SHEETS.
4. INLET STRUCTURE SKEW ANGLE IS MEASURED FROM A LINE PERPENDICULAR TO THE CULVERT ALIGNMENT.

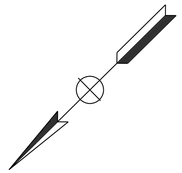

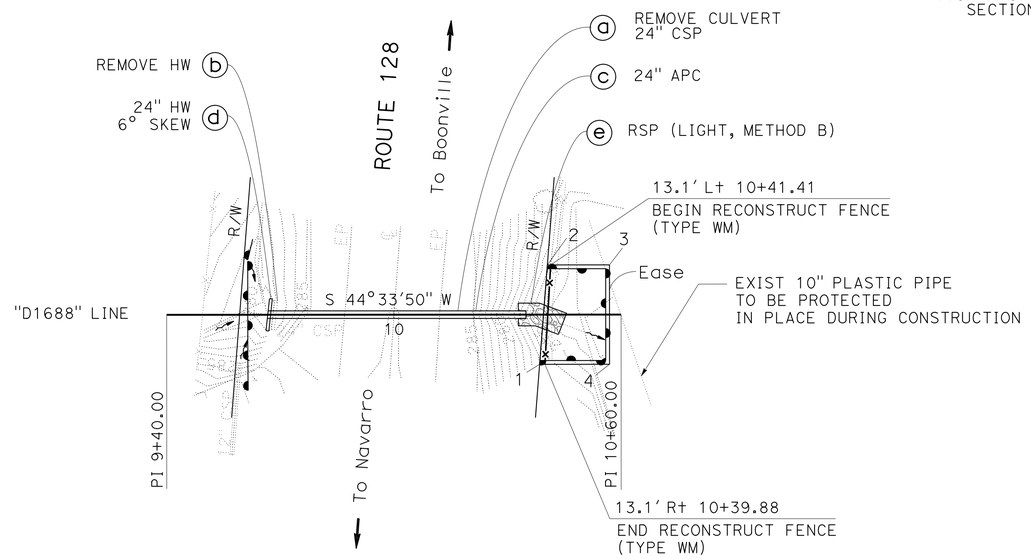

POINT	STATION	OFFSET
1	10+38.48	13.12' R+
2	10+40.54	13.13' L+
3	10+56.94	13.13' L+
4	10+56.94	13.12' R+

DRAINAGE SYSTEM (12)

ROUTE 128
PM 16.88
SCALE: 1" = 20'

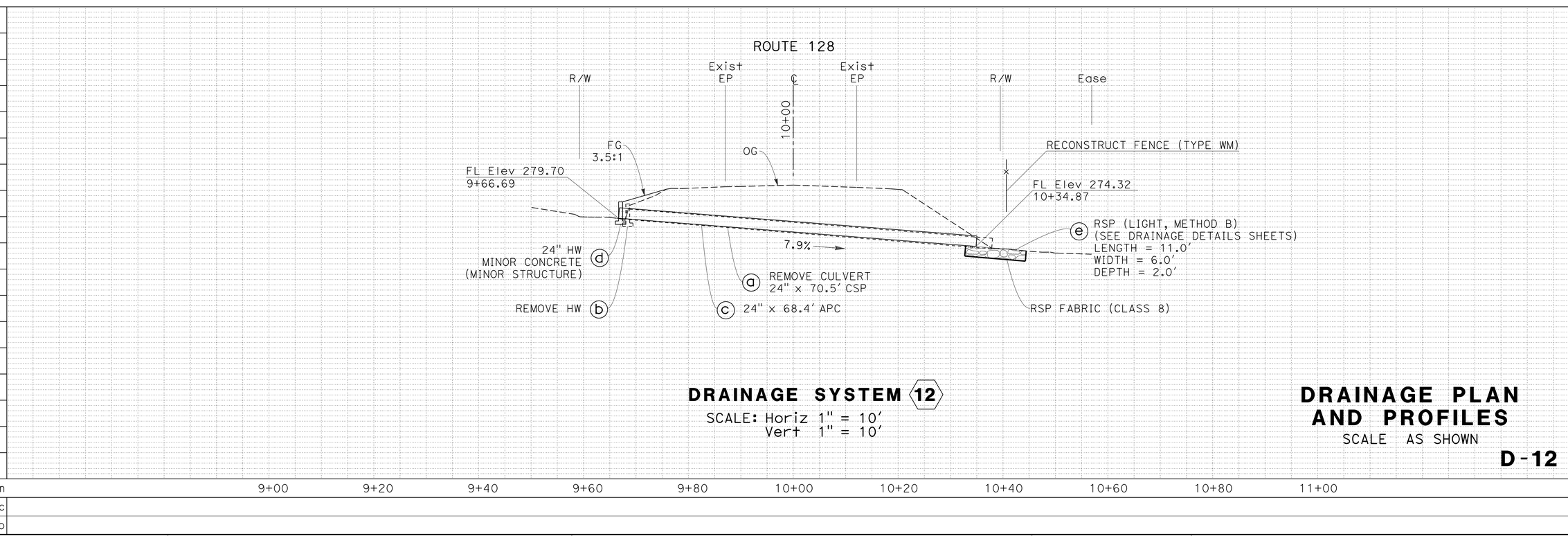

DRAINAGE SYSTEM (12)

SCALE: Horiz 1" = 10'
Vert 1" = 10'

DRAINAGE PLAN AND PROFILES

SCALE AS SHOWN

D-12

REVISED BY | DATE REVISED
LARISA V. SASEVICH | TIMOTHY TRINH
CALCULATED-DESIGNED BY | CHECKED BY
FUNCTIONAL SUPERVISOR: ROBERT E. POLGAR

STATE OF CALIFORNIA - DEPARTMENT OF TRANSPORTATION
Caltrans® DIVISION OF ENGINEERING

LAST REVISION 03-30-11
DATE PLOTTED => 07-AUG-2013
TIME PLOTTED => 14:57

Dist	COUNTY	ROUTE	POST MILES TOTAL PROJECT	SHEET No.	TOTAL SHEETS
01	Men	128	Var	18	106

Larisa V. Sasevich 6-24-13
REGISTERED CIVIL ENGINEER DATE

6-24-13
PLANS APPROVAL DATE

REGISTERED PROFESSIONAL ENGINEER LARISA V. SASEVICH No. C 71520 Exp. 12-31-13 CIVIL STATE OF CALIFORNIA

THE STATE OF CALIFORNIA OR ITS OFFICERS OR AGENTS SHALL NOT BE RESPONSIBLE FOR THE ACCURACY OR COMPLETENESS OF SCANNED COPIES OF THIS PLAN SHEET.

T15N R15W MDB&M
SECTION 33

NOTES:

1. FOR ACCURATE RIGHT OF WAY DATA, CONTACT RIGHT OF WAY ENGINEERING AT THE DISTRICT OFFICE.
2. THIS PLAN ACCURATE FOR DRAINAGE WORK ONLY.

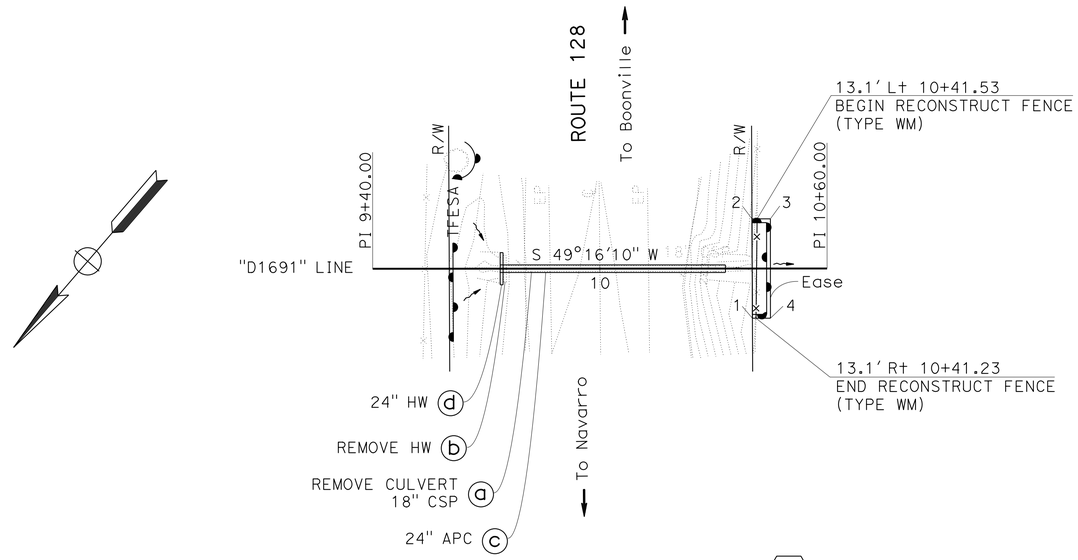

POINT	STATION	OFFSET
1	10+40.27	13.12' Rt
2	10+40.17	13.12' Lt
3	10+45.03	13.12' Lt
4	10+45.03	13.12' Rt

DRAINAGE SYSTEM 13
ROUTE 128
PM 16.91
SCALE: 1" = 20'

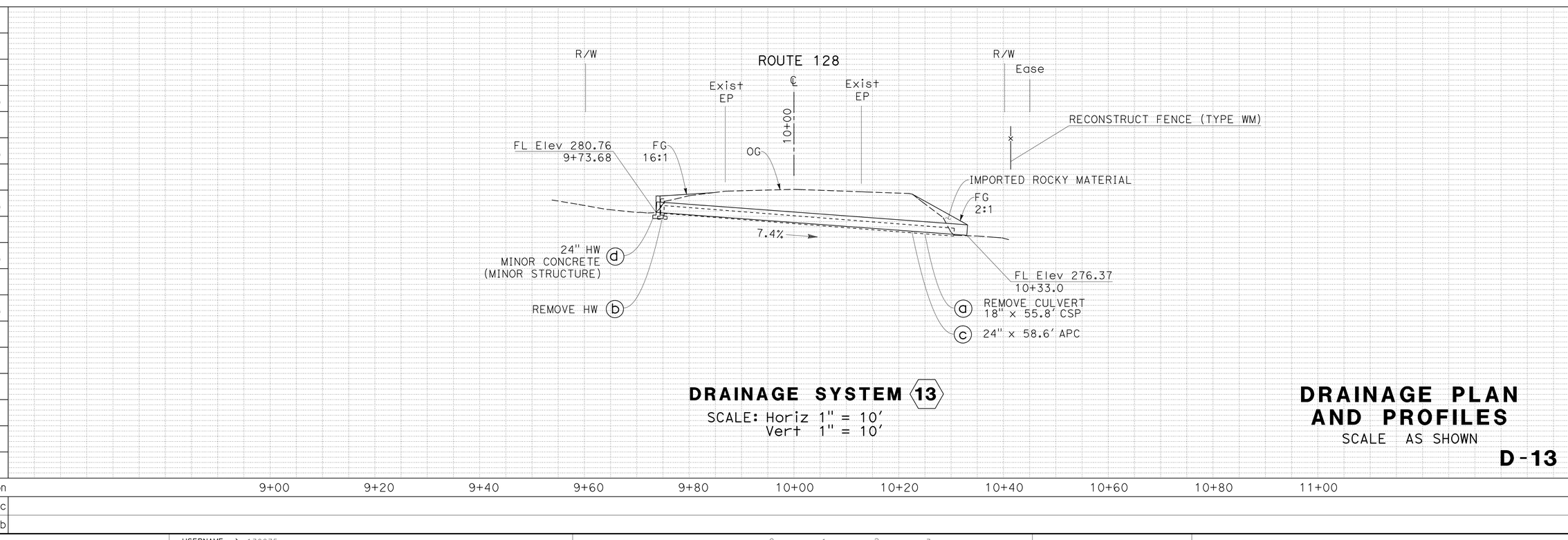

DRAINAGE SYSTEM 13
SCALE: Horiz 1" = 10'
Vert 1" = 10'

DRAINAGE PLAN AND PROFILES
SCALE AS SHOWN

D-13

STATE OF CALIFORNIA - DEPARTMENT OF TRANSPORTATION
Caltrans® DIVISION OF ENGINEERING
FUNCTIONAL SUPERVISOR: ROBERT E. POLGAR
CALCULATED-DESIGNED BY: LARISA V. SASEVICH
CHECKED BY: TIMOTHY TRINH
REVISED BY / DATE REVISED

LAST REVISION 03-30-11
DATE PLOTTED => 07-AUG-2013
TIME PLOTTED => 14:57

Dist	COUNTY	ROUTE	POST MILES TOTAL PROJECT	SHEET No.	TOTAL SHEETS
01	Men	128	Var	19	106

Larisa V. Sasevich 6-24-13
REGISTERED CIVIL ENGINEER DATE

6-24-13
PLANS APPROVAL DATE

REGISTERED PROFESSIONAL ENGINEER LARISA V. SASEVICH No. C 71520 Exp. 12-31-13 CIVIL STATE OF CALIFORNIA

THE STATE OF CALIFORNIA OR ITS OFFICERS OR AGENTS SHALL NOT BE RESPONSIBLE FOR THE ACCURACY OR COMPLETENESS OF SCANNED COPIES OF THIS PLAN SHEET.

T15N R15W MDB&M
SECTION 33

NOTES:

1. FOR ACCURATE RIGHT OF WAY DATA, CONTACT RIGHT OF WAY ENGINEERING AT THE DISTRICT OFFICE.
2. THIS PLAN ACCURATE FOR DRAINAGE WORK ONLY.
3. FOR ROCK SLOPE PROTECTION DETAILS SEE DRAINAGE DETAIL SHEETS.
4. NEW 48" APC ARE 3' APART (EDGE TO EDGE).

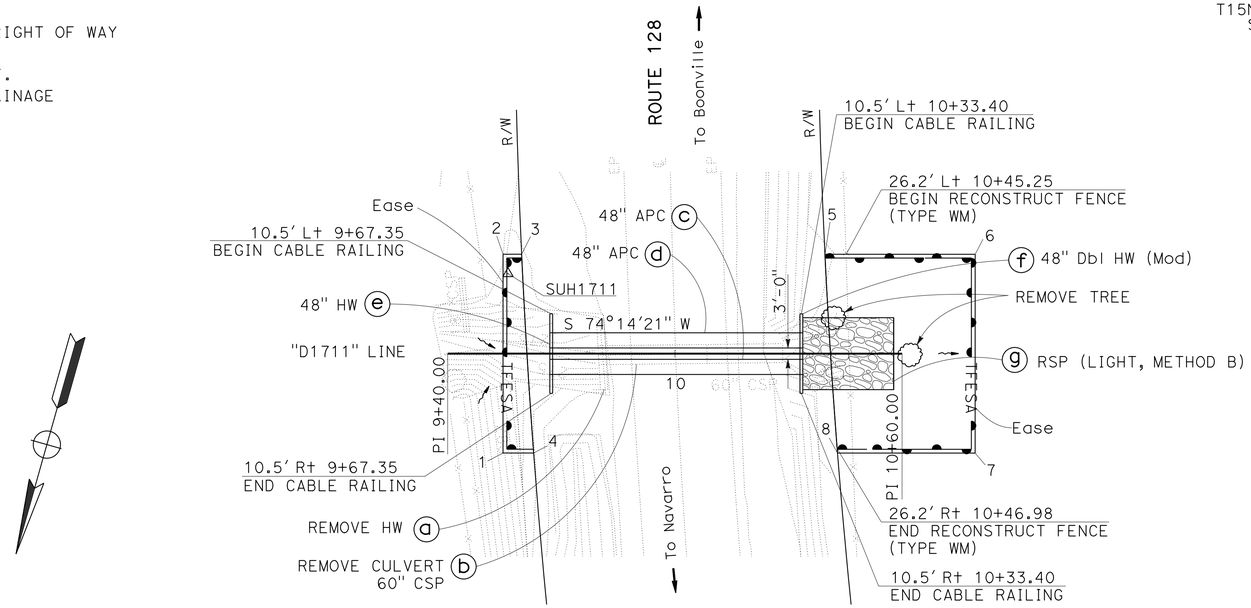

POINT	STATION	OFFSET
1	9+54.62	26.2' R+
2	9+54.62	26.2' L+
3	9+59.53	26.2' L+
4	9+62.71	26.2' R+
5	10+39.62	26.2' L+
6	10+79.29	26.2' L+
7	10+79.29	26.2' R+
8	10+42.95	26.2' R+

DRAINAGE SYSTEM 14

ROUTE 128
PM 17.11
SCALE: 1" = 20'

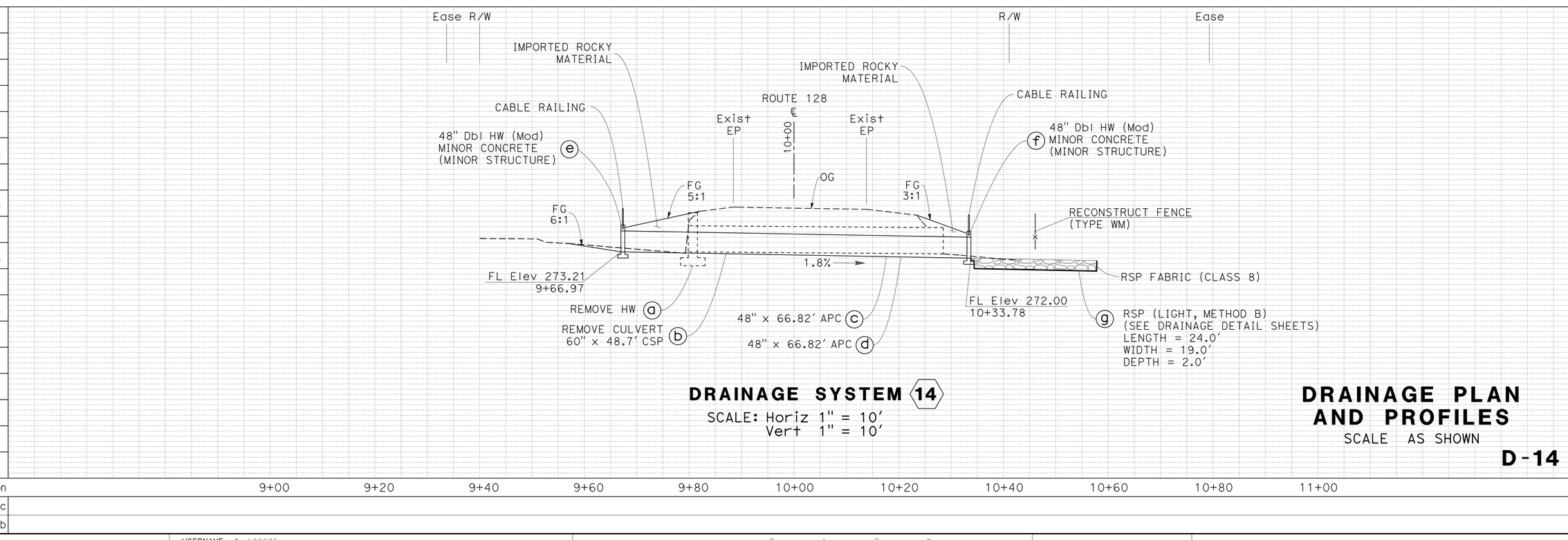

DRAINAGE SYSTEM 14

SCALE: Horiz 1" = 10'
Vert 1" = 10'

DRAINAGE PLAN AND PROFILES

SCALE AS SHOWN

D-14

REVISED BY | DATE REVISED
LARISA V. SASEVICH | TIMOTHY TRINH
CALCULATED-DESIGNED BY | CHECKED BY
FUNCTIONAL SUPERVISOR | ROBERT E. POLGAR

STATE OF CALIFORNIA - DEPARTMENT OF TRANSPORTATION
Caltrans® DIVISION OF ENGINEERING

LAST REVISION 03-30-11
DATE PLOTTED => 07-AUG-2013
TIME PLOTTED => 14:57

Dist	COUNTY	ROUTE	POST MILES TOTAL PROJECT	SHEET No.	TOTAL SHEETS
01	Men	128	Var	20	106

Larisa V. Sasevich 6-24-13
REGISTERED CIVIL ENGINEER DATE

6-24-13
PLANS APPROVAL DATE

REGISTERED PROFESSIONAL ENGINEER LARISA V. SASEVICH No. C 71520 Exp. 12-31-13 CIVIL STATE OF CALIFORNIA

THE STATE OF CALIFORNIA OR ITS OFFICERS OR AGENTS SHALL NOT BE RESPONSIBLE FOR THE ACCURACY OR COMPLETENESS OF SCANNED COPIES OF THIS PLAN SHEET.

T15N R15W MDB&M
SECTION 33

NOTES:

1. FOR ACCURATE RIGHT OF WAY DATA, CONTACT RIGHT OF WAY ENGINEERING AT THE DISTRICT OFFICE.
2. THIS PLAN ACCURATE FOR DRAINAGE WORK ONLY.
3. FOR CONCRETE BACKFILL (PIPE TRENCH) DETAILS SEE DRAINAGE DETAIL SHEETS.

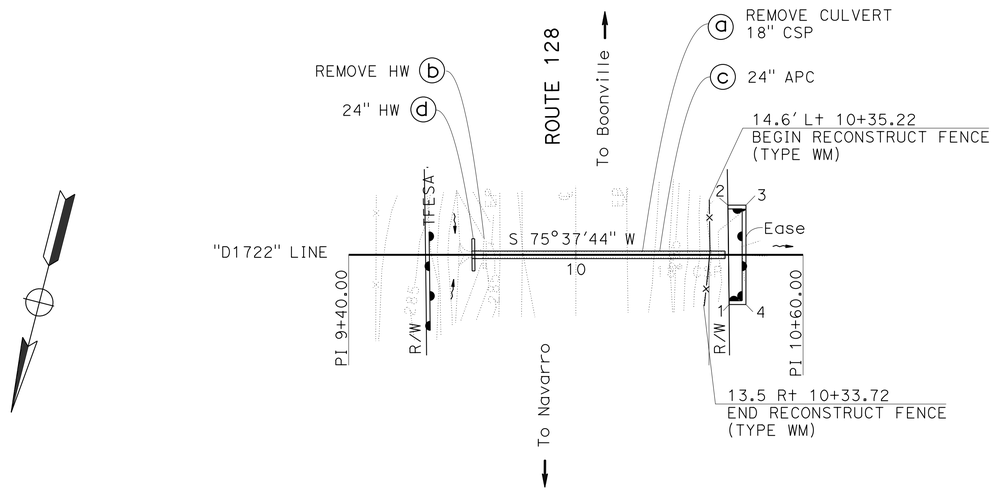

POINT	STATION	OFFSET
1	10+40.46	13.12' Rt
2	10+40.13	13.12' Lt
3	10+44.91	13.13' Lt
4	10+44.91	13.12' Rt

DRAINAGE SYSTEM (15)
ROUTE 128
PM 17.22
SCALE: 1" = 20'

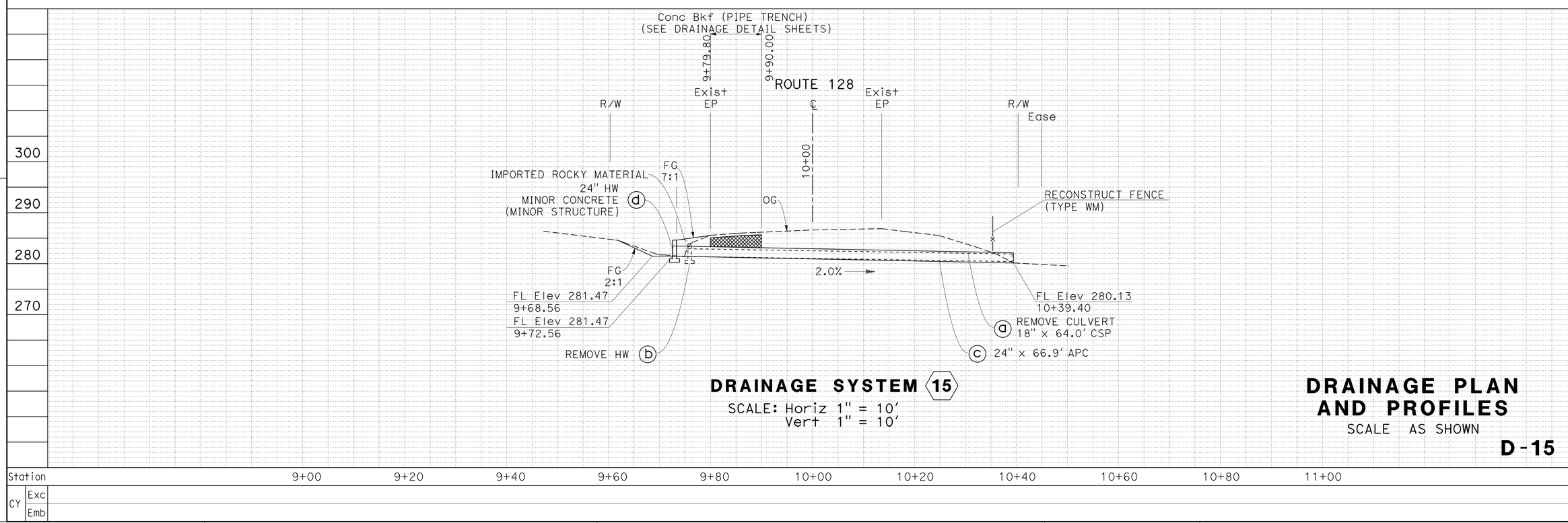

DRAINAGE SYSTEM (15)
SCALE: Horiz 1" = 10'
Vert 1" = 10'

DRAINAGE PLAN AND PROFILES
SCALE AS SHOWN

D-15

STATE OF CALIFORNIA - DEPARTMENT OF TRANSPORTATION
Caltrans® DIVISION OF ENGINEERING

FUNCTIONAL SUPERVISOR: ROBERT E. POLGAR
CALCULATED-DESIGNED BY: LARISA V. SASEVICH
CHECKED BY: TIMOTHY TRINH
REVISED BY / DATE REVISED

LAST REVISION 03-30-11
DATE PLOTTED => 07-AUG-2013
TIME PLOTTED => 14:57

Dist	COUNTY	ROUTE	POST MILES TOTAL PROJECT	SHEET No.	TOTAL SHEETS
01	Men	128	Var	21	106

Robert E. Polgar 6-24-13
REGISTERED CIVIL ENGINEER DATE

6-24-13
PLANS APPROVAL DATE

REGISTERED PROFESSIONAL ENGINEER ROBERT E. POLGAR No. C 51768 Exp. 06-30-14 CIVIL STATE OF CALIFORNIA

THE STATE OF CALIFORNIA OR ITS OFFICERS OR AGENTS SHALL NOT BE RESPONSIBLE FOR THE ACCURACY OR COMPLETENESS OF SCANNED COPIES OF THIS PLAN SHEET.

T15N R15W MDB&M
SECTION 33

NOTES:

1. FOR ACCURATE RIGHT OF WAY DATA, CONTACT RIGHT OF WAY ENGINEERING AT THE DISTRICT OFFICE.
2. THIS PLAN ACCURATE FOR DRAINAGE WORK ONLY.
3. FOR ROCK SLOPE PROTECTION DETAILS SEE DRAINAGE DETAIL SHEETS.
4. INLET STRUCTURE SKEW ANGLE IS MEASURED FROM A LINE PERPENDICULAR TO THE CULVERT ALIGNMENT.

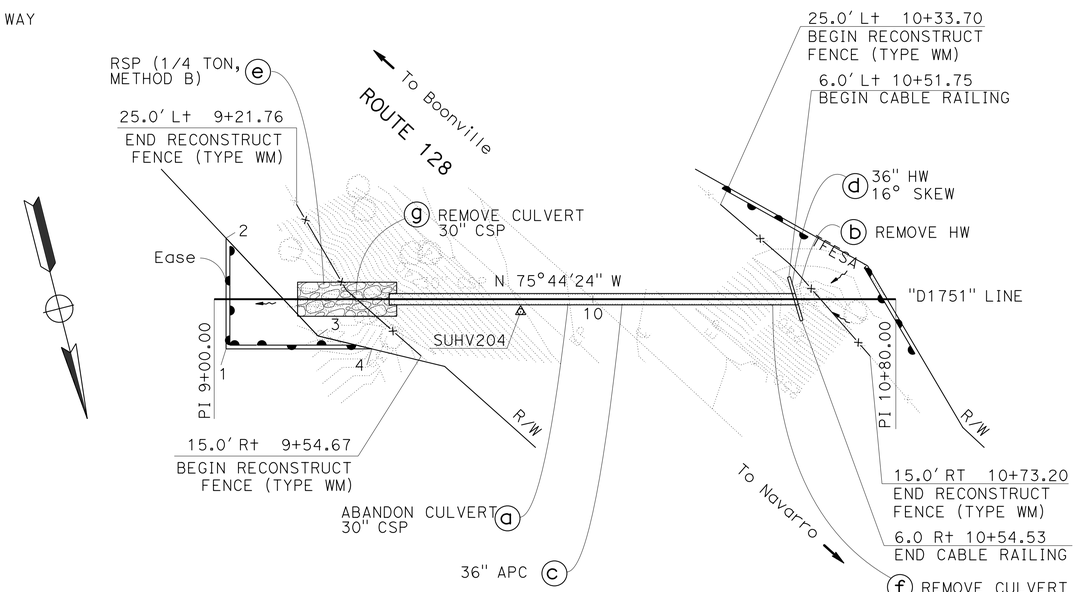

DRAINAGE SYSTEM 16
ROUTE 128
PM 17.51
SCALE: 1" = 20'

POINT	STATION	OFFSET
1	9+03.13	13.12' Rt
2	9+03.14	16.11' Lt
3	9+27.40	9.70' Lt
4	9+41.64	13.12' Rt

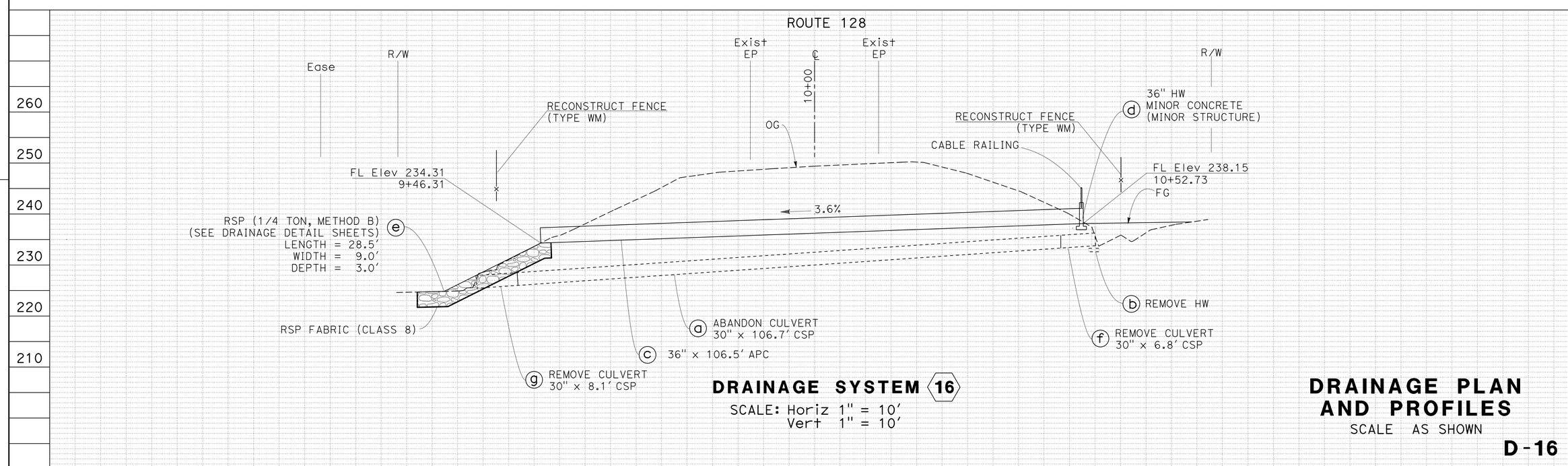

DRAINAGE SYSTEM 16
SCALE: Horiz 1" = 10'
Vert 1" = 10'

DRAINAGE PLAN AND PROFILES
SCALE AS SHOWN

D-16

REVISED BY | DATE REVISED
MEL ZELEKE | R SCOTT FOSTER
CALCULATED-DESIGNED BY | CHECKED BY
FUNCTIONAL SUPERVISOR | ROBERT E. POLGAR

STATE OF CALIFORNIA - DEPARTMENT OF TRANSPORTATION
Caltrans® DIVISION OF ENGINEERING

LAST REVISION 06-19-13 | DATE PLOTTED => 07-AUG-2013 | TIME PLOTTED => 14:57

Dist	COUNTY	ROUTE	POST MILES TOTAL PROJECT	SHEET No.	TOTAL SHEETS
01	Men	128	Var	22	106

Larisa V. Sasevich 6-24-13
REGISTERED CIVIL ENGINEER DATE

6-24-13
PLANS APPROVAL DATE

REGISTERED PROFESSIONAL ENGINEER LARISA V. SASEVICH No. C 71520 Exp. 12-31-13 CIVIL STATE OF CALIFORNIA

THE STATE OF CALIFORNIA OR ITS OFFICERS OR AGENTS SHALL NOT BE RESPONSIBLE FOR THE ACCURACY OR COMPLETENESS OF SCANNED COPIES OF THIS PLAN SHEET.

T14N R15W MDB&M
SECTION 3

NOTES:

1. FOR ACCURATE RIGHT OF WAY DATA, CONTACT RIGHT OF WAY ENGINEERING AT THE DISTRICT OFFICE.
2. THIS PLAN ACCURATE FOR DRAINAGE WORK ONLY.
3. FOR ROCK SLOPE PROTECTION DETAILS SEE DRAINAGE DETAIL SHEETS.
4. INLET STRUCTURE SKEW ANGLE IS MEASURED FROM A LINE PERPENDICULAR TO THE CULVERT ALIGNMENT.

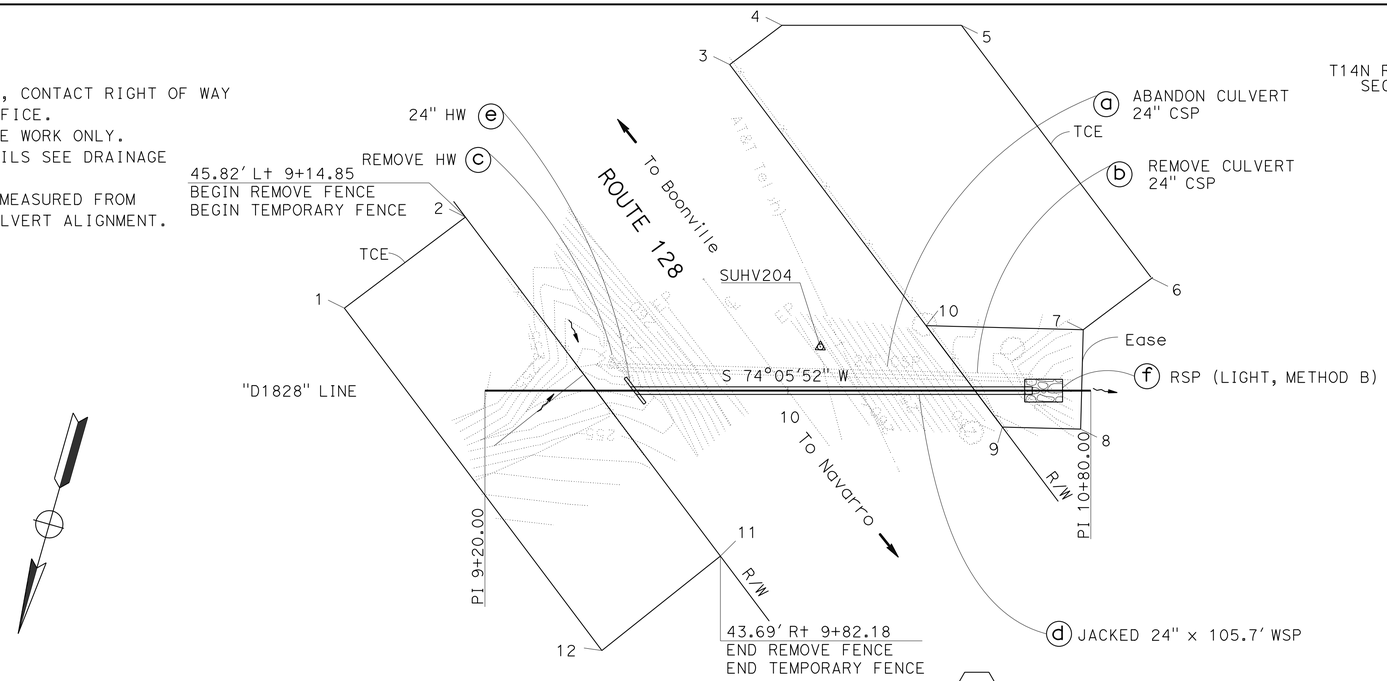

POINT	STATION	OFFSET
1	8+82.88	21.78' Lt
2	9+14.85	45.82' Lt
3	9+84.64	86.09' Lt
4	9+98.44	96.47' Lt
5	10+45.83	96.47' Lt
6	10+96.07	29.68' Lt
7	10+78.00	16.08' Lt
8	10+77.31	10.16' Rt
9	10+56.64	9.62' Rt
10	10+36.50	17.16' Lt
11	9+82.18	43.69' Rt
12	9+50.88	68.63' Rt

DRAINAGE SYSTEM 18
ROUTE 128
PM 18.28
SCALE: 1" = 20'

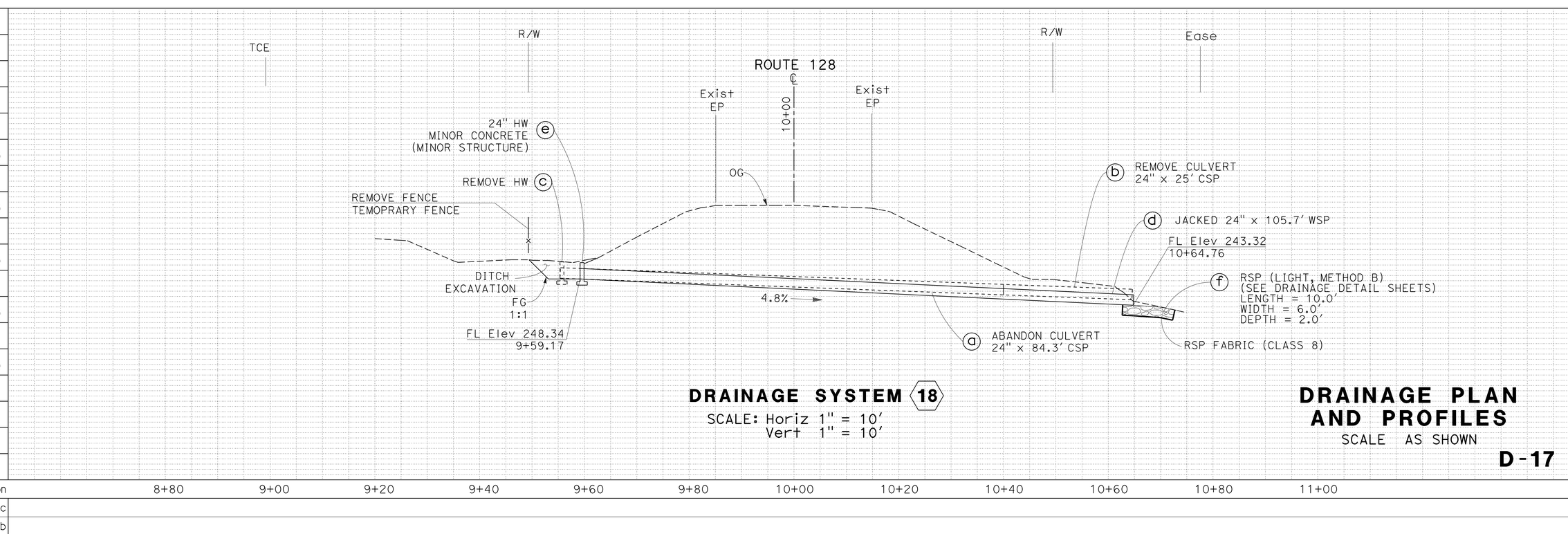

DRAINAGE SYSTEM 18
SCALE: Horiz 1" = 10'
Vert 1" = 10'

DRAINAGE PLAN AND PROFILES
SCALE AS SHOWN

D-17

REVISED BY | DATE REVISED
LARISA V. SASEVICH | TIMOTHY TRINH
CALCULATED-DESIGNED BY | CHECKED BY
FUNCTIONAL SUPERVISOR: ROBERT E. POLGAR

STATE OF CALIFORNIA - DEPARTMENT OF TRANSPORTATION
Caltrans® DIVISION OF ENGINEERING

LAST REVISION 03-30-11 | DATE PLOTTED => 07-AUG-2013 | TIME PLOTTED => 14:57

Dist	COUNTY	ROUTE	POST MILES TOTAL PROJECT	SHEET No.	TOTAL SHEETS
01	Men	128	Var	23	106

Larisa V. Sasevich 6-24-13
REGISTERED CIVIL ENGINEER DATE

6-24-13
PLANS APPROVAL DATE

REGISTERED PROFESSIONAL ENGINEER LARISA V. SASEVICH No. C 71520 Exp. 12-31-13 CIVIL STATE OF CALIFORNIA

THE STATE OF CALIFORNIA OR ITS OFFICERS OR AGENTS SHALL NOT BE RESPONSIBLE FOR THE ACCURACY OR COMPLETENESS OF SCANNED COPIES OF THIS PLAN SHEET.

T14N R15W MDB&M
SECTION 3

NOTES:

1. FOR ACCURATE RIGHT OF WAY DATA, CONTACT RIGHT OF WAY ENGINEERING AT THE DISTRICT OFFICE.
2. THIS PLAN ACCURATE FOR DRAINAGE WORK ONLY.
3. INLET AND OUTLET STRUCTURE SKEW ANGLE IS MEASURED FROM A LINE PERPENDICULAR TO THE CULVERT ALIGNMENT.

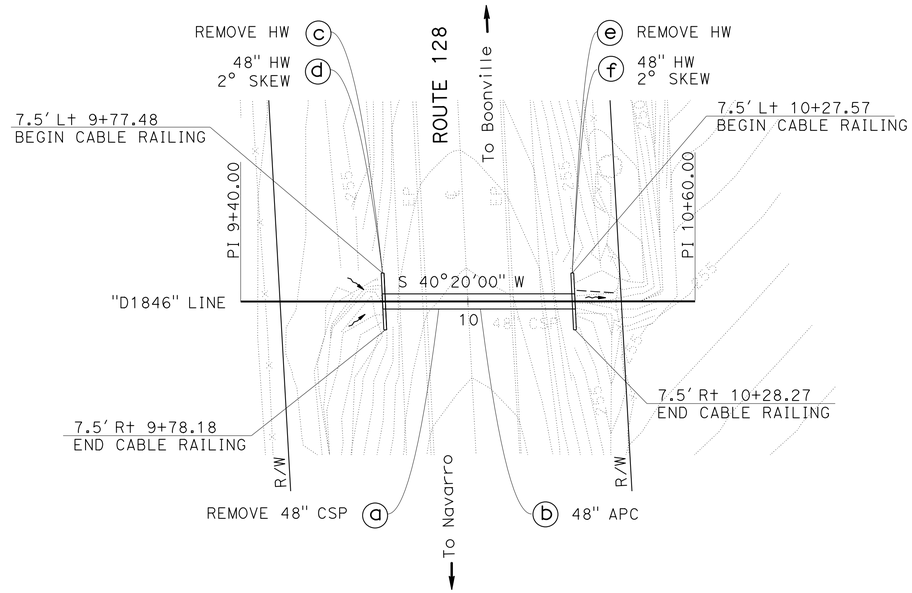

DRAINAGE SYSTEM 19
ROUTE 128
PM 18.46
SCALE: 1" = 20'

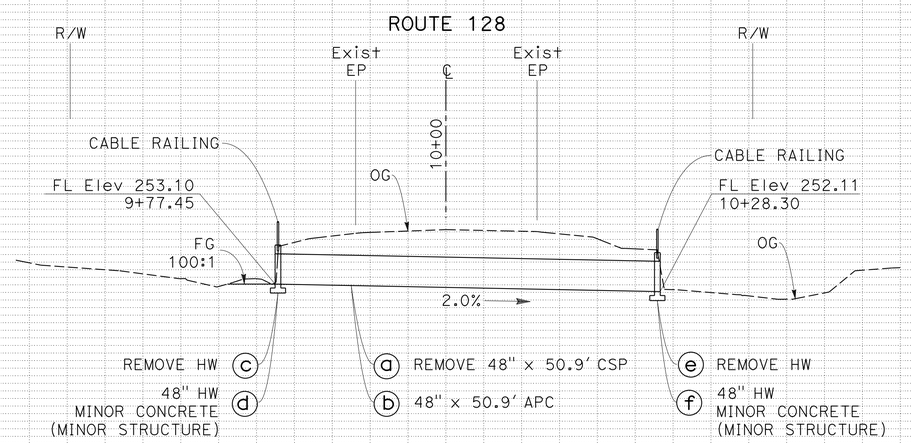

DRAINAGE SYSTEM 19
SCALE: Horiz 1" = 10'
Vert 1" = 10'

DRAINAGE PLAN AND PROFILES
SCALE AS SHOWN

D-18

Station	9+00	9+20	9+40	9+60	9+80	10+00	10+20	10+40	10+60	10+80	11+00
CY Exc											
CY Emb											

270 260 250 240

STATE OF CALIFORNIA - DEPARTMENT OF TRANSPORTATION
Caltrans® DIVISION OF ENGINEERING
FUNCTIONAL SUPERVISOR: ROBERT E. POLGAR
CALCULATED-DESIGNED BY: LARISA V. SASEVICH
CHECKED BY: TIMOTHY TRINH
REVISED BY / DATE REVISED

LAST REVISION 03-30-11
DATE PLOTTED => 07-AUG-2013
TIME PLOTTED => 14:57

Dist	COUNTY	ROUTE	POST MILES TOTAL PROJECT	SHEET No.	TOTAL SHEETS
01	Men	128	Var	24	106

Larisa V. Sasevich 6-24-13
REGISTERED CIVIL ENGINEER DATE

6-24-13
PLANS APPROVAL DATE

REGISTERED PROFESSIONAL ENGINEER LARISA V. SASEVICH No. C 71520 Exp. 12-31-13 CIVIL STATE OF CALIFORNIA

THE STATE OF CALIFORNIA OR ITS OFFICERS OR AGENTS SHALL NOT BE RESPONSIBLE FOR THE ACCURACY OR COMPLETENESS OF SCANNED COPIES OF THIS PLAN SHEET.

T14N R15W MDB&M
SECTION 3

NOTES:

1. FOR ACCURATE RIGHT OF WAY DATA, CONTACT RIGHT OF WAY ENGINEERING AT THE DISTRICT OFFICE.
2. THIS PLAN ACCURATE FOR DRAINAGE WORK ONLY.
3. FOR ROCK SLOPE PROTECTION DETAILS SEE DRAINAGE DETAIL SHEETS.
4. INLET STRUCTURE SKEW ANGLE IS MEASURED FROM A LINE PERPENDICULAR TO THE CULVERT ALIGNMENT.

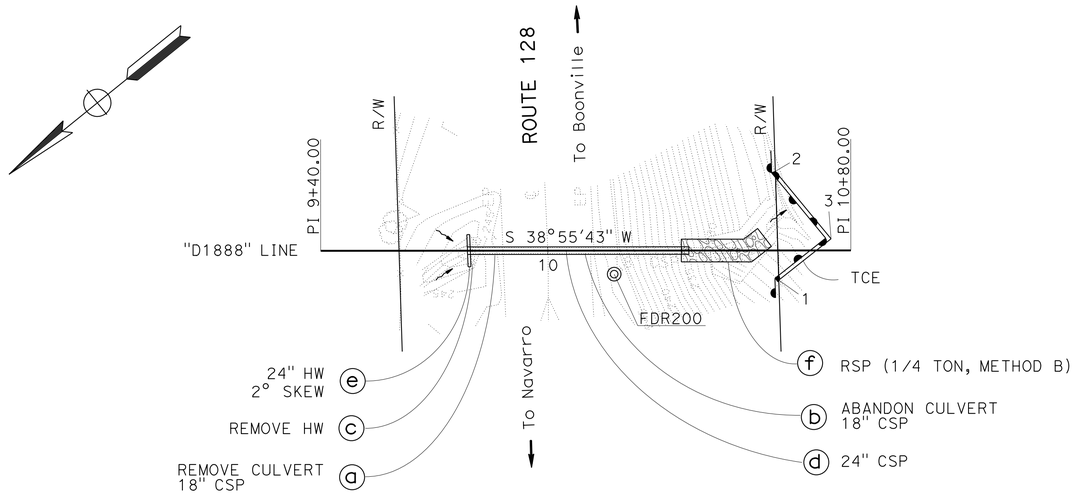

POINT	STATION	OFFSET
1	10+61.08	7.83' Rt
2	10+60.07	20.90' Lt
3	10+74.79	3.08' Lt

DRAINAGE SYSTEM 20

ROUTE 128
PM 18.88
SCALE: 1" = 20'

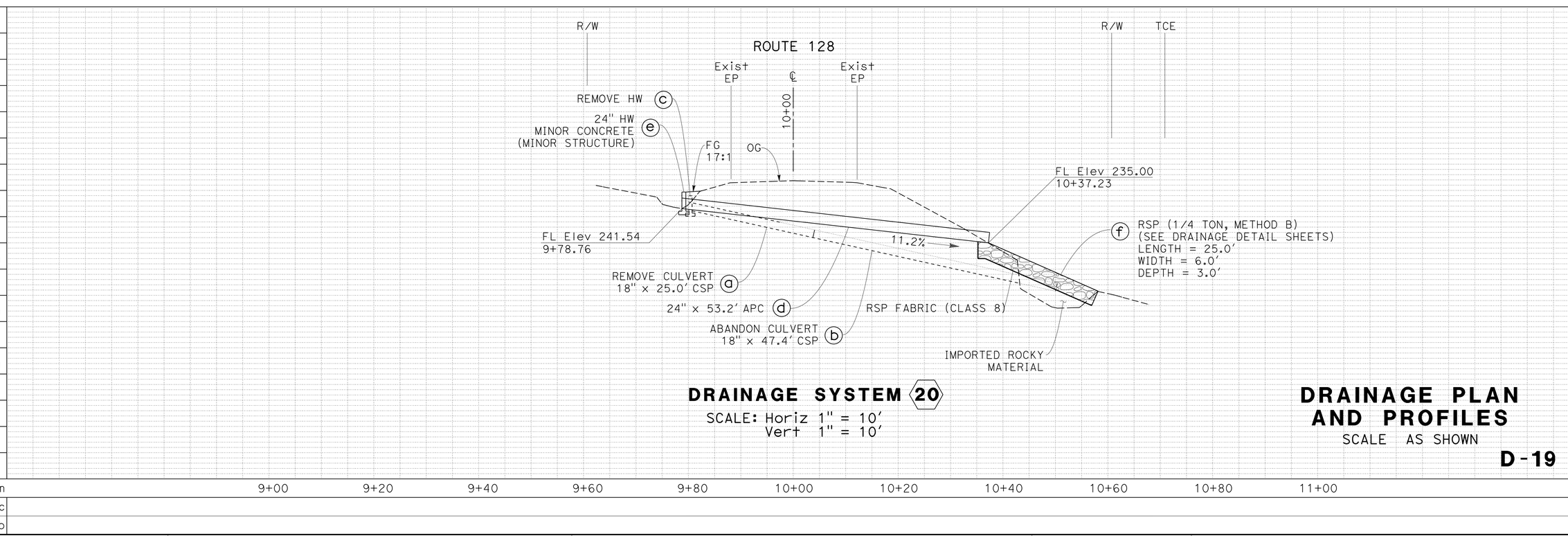

DRAINAGE SYSTEM 20

SCALE: Horiz 1" = 10'
Vert 1" = 10'

DRAINAGE PLAN AND PROFILES

SCALE AS SHOWN

D-19

REVISED BY | DATE REVISED
LARISA V. SASEVICH | TIMOTHY TRINH
CALCULATED-DESIGNED BY | CHECKED BY
FUNCTIONAL SUPERVISOR | ROBERT E. POLGAR
STATE OF CALIFORNIA - DEPARTMENT OF TRANSPORTATION
Caltrans® DIVISION OF ENGINEERING

LAST REVISION 03-30-11
DATE PLOTTED => 07-AUG-2013
TIME PLOTTED => 14:57

Dist	COUNTY	ROUTE	POST MILES TOTAL PROJECT	SHEET No.	TOTAL SHEETS
01	Men	128	Var	25	106

Larisa V. Sasevich 6-24-13
REGISTERED CIVIL ENGINEER DATE

6-24-13
PLANS APPROVAL DATE

REGISTERED PROFESSIONAL ENGINEER LARISA V. SASEVICH No. C 71520 Exp. 12-31-13 CIVIL STATE OF CALIFORNIA

THE STATE OF CALIFORNIA OR ITS OFFICERS OR AGENTS SHALL NOT BE RESPONSIBLE FOR THE ACCURACY OR COMPLETENESS OF SCANNED COPIES OF THIS PLAN SHEET.

T14N R15W MDB&M
SECTION 2

NOTES:

1. FOR ACCURATE RIGHT OF WAY DATA, CONTACT RIGHT OF WAY ENGINEERING AT THE DISTRICT OFFICE.
2. THIS PLAN ACCURATE FOR DRAINAGE WORK ONLY.
3. FOR ROCK SLOPE PROTECTION DETAILS SEE DRAINAGE DETAIL SHEETS.
4. FOR CONCRETE BACKFILL (PIPE TRENCH) DETAILS SEE DRAINAGE DETAIL SHEETS.

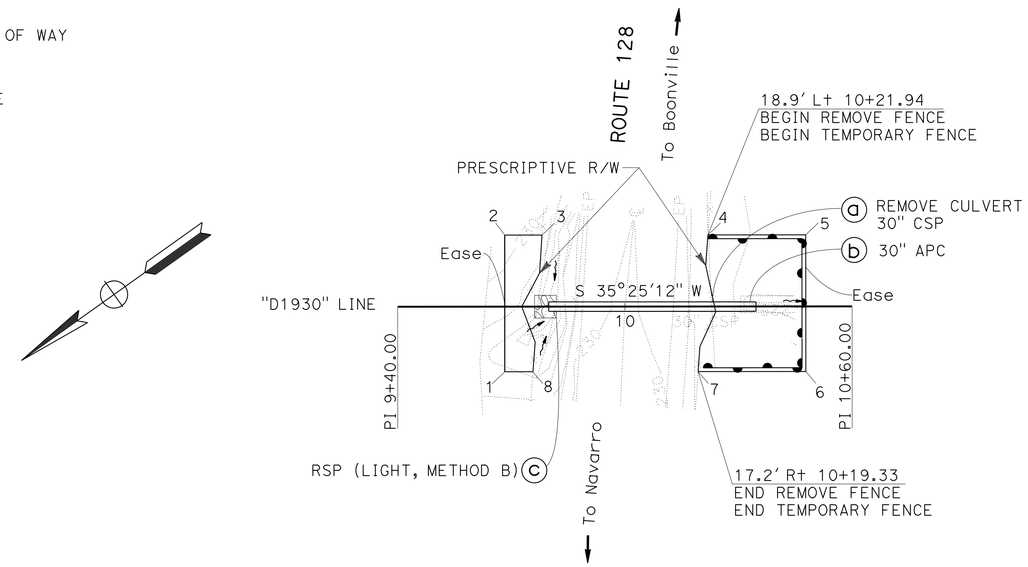

POINT	STATION	OFFSET
1	9+68.28	17.2' Rt
2	9+68.28	18.9' Lt
3	9+78.13	18.9' Lt
4	10+21.94	17.2' Rt
5	10+47.77	18.9' Lt
6	10+47.77	18.9' Lt
7	10+19.33	17.2' Rt
8	9+75.66	17.2' Rt

DRAINAGE SYSTEM 21

ROUTE 128
PM 19.30
SCALE: 1" = 20'

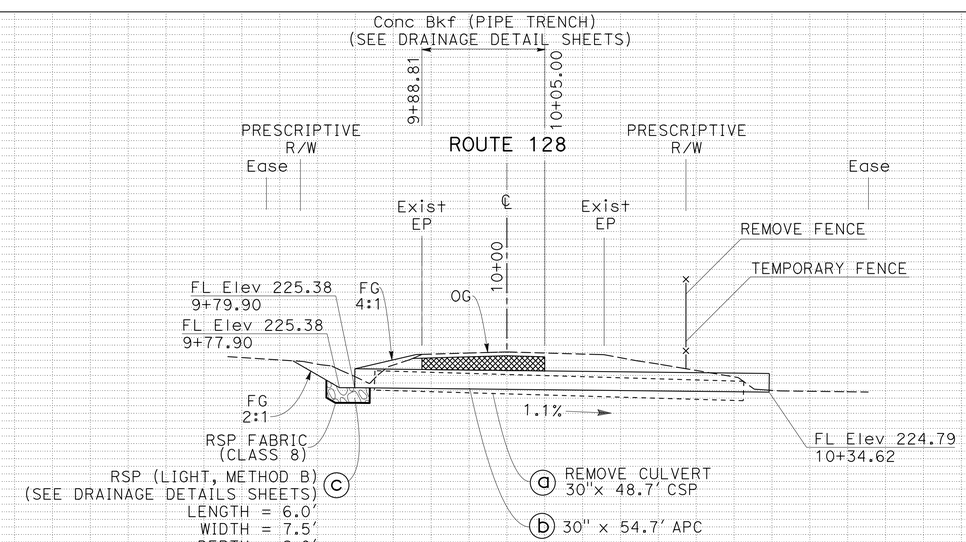

DRAINAGE SYSTEM 21

SCALE: Horiz 1" = 10'
Vert 1" = 10'

DRAINAGE PLAN AND PROFILES

SCALE AS SHOWN

D-20

Station	9+00	9+20	9+40	9+60	9+80	10+00	10+20	10+40	10+60	10+80	11+00
CY Exc											
CY Emb											

REVISED BY | DATE REVISED
LARISA V. SASEVICH | R SCOT FOSTER
CALCULATED-DESIGNED BY | CHECKED BY
FUNCTIONAL SUPERVISOR | ROBERT E. POLGAR

STATE OF CALIFORNIA - DEPARTMENT OF TRANSPORTATION
Caltrans® DIVISION OF ENGINEERING

LAST REVISION 06-19-13 | DATE PLOTTED => 07-AUG-2013 | TIME PLOTTED => 14:57

Dist	COUNTY	ROUTE	POST MILES TOTAL PROJECT	SHEET No.	TOTAL SHEETS
01	Men	128	Var	26	106

Larisa V. Sasevich 6-24-13
REGISTERED CIVIL ENGINEER DATE

6-24-13
PLANS APPROVAL DATE

REGISTERED PROFESSIONAL ENGINEER LARISA V. SASEVICH No. C 71520 Exp. 12-31-13 CIVIL STATE OF CALIFORNIA

THE STATE OF CALIFORNIA OR ITS OFFICERS OR AGENTS SHALL NOT BE RESPONSIBLE FOR THE ACCURACY OR COMPLETENESS OF SCANNED COPIES OF THIS PLAN SHEET.

T14N R15W MDB&M
SECTION 2

NOTES:

1. FOR ACCURATE RIGHT OF WAY DATA, CONTACT RIGHT OF WAY ENGINEERING AT THE DISTRICT OFFICE.
2. THIS PLAN ACCURATE FOR DRAINAGE WORK ONLY.
3. FOR CONCRETE BACKFILL (PIPE TRENCH) DETAILS SEE DRAINAGE DETAIL SHEETS.

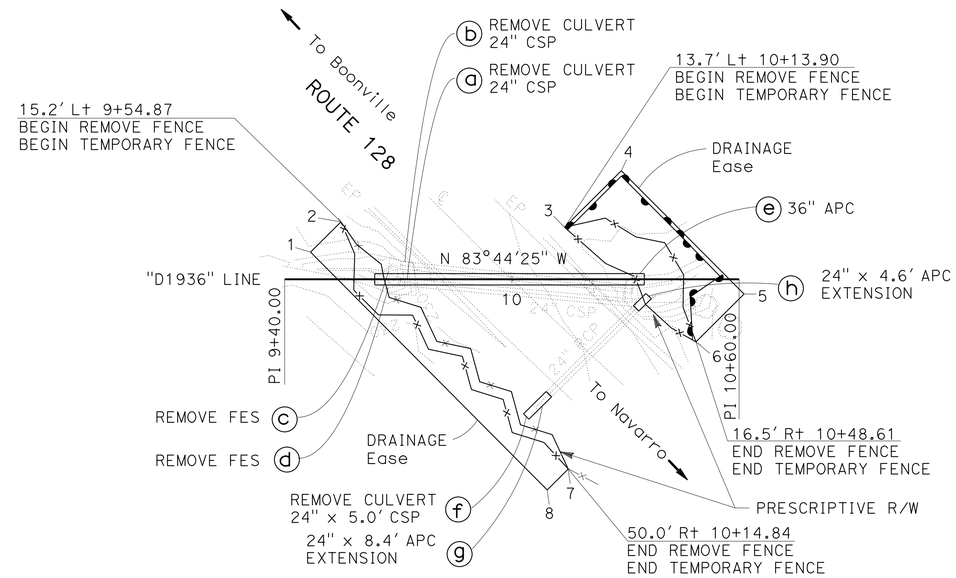

POINT	STATION	OFFSET
1	9+46.84	7.17 Lt
2	9+54.87	5.64 Lt
3	10+13.90	13.73 Lt
4	10+28.91	28.66 Lt
5	10+61.31	3.90 Rt
6	10+48.61	16.53 Rt
7	10+14.84	50.04 Rt
8	10+09.32	55.63 Rt

DRAINAGE SYSTEM 22
ROUTE 128
PM 19.36
SCALE: 1" = 20'

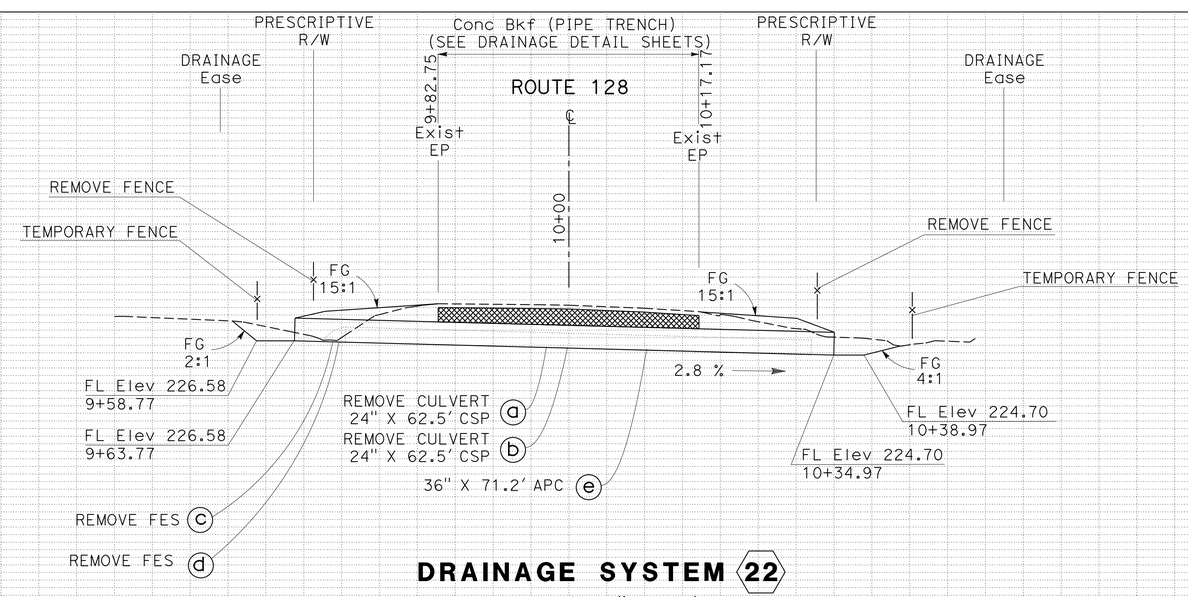

DRAINAGE SYSTEM 22
SCALE: Horiz 1" = 10'
Vert 1" = 10'

DRAINAGE PLAN AND PROFILES
SCALE AS SHOWN

D-21

Station 9+00 9+20 9+40 9+60 9+80 10+00 10+20 10+40 10+60 10+80 11+00

CY Exc
Emb

REVISED BY | DATE REVISED
LARISA V. SASEVICH | TIMOTHY TRINH
CALCULATED-DESIGNED BY | CHECKED BY
FUNCTIONAL SUPERVISOR | ROBERT E. POLGAR

STATE OF CALIFORNIA - DEPARTMENT OF TRANSPORTATION
Caltrans® DIVISION OF ENGINEERING

LAST REVISION 03-30-11
DATE PLOTTED => 07-AUG-2013
TIME PLOTTED => 14:57

Dist	COUNTY	ROUTE	POST MILES TOTAL PROJECT	SHEET No.	TOTAL SHEETS
01	Men	128	Var	27	106

Larisa V. Sasevich 6-24-13
REGISTERED CIVIL ENGINEER DATE

6-24-13
PLANS APPROVAL DATE

REGISTERED PROFESSIONAL ENGINEER LARISA V. SASEVICH No. C 71520 Exp. 12-31-13 CIVIL STATE OF CALIFORNIA

THE STATE OF CALIFORNIA OR ITS OFFICERS OR AGENTS SHALL NOT BE RESPONSIBLE FOR THE ACCURACY OR COMPLETENESS OF SCANNED COPIES OF THIS PLAN SHEET.

T14N R15W MDB&M
SECTION 13

NOTES:

1. FOR ACCURATE RIGHT OF WAY DATA, CONTACT RIGHT OF WAY ENGINEERING AT THE DISTRICT OFFICE.
2. THIS PLAN ACCURATE FOR DRAINAGE WORK ONLY.
3. FOR CONCRETE BACKFILL (PIPE TRENCH) DETAILS SEE DRAINAGE DETAIL SHEETS.

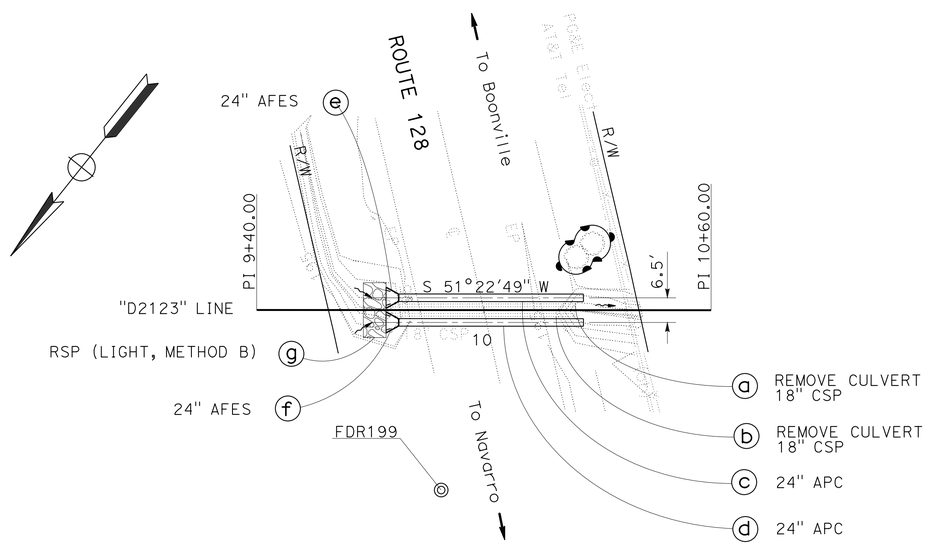

DRAINAGE SYSTEM 24

ROUTE 128
PM 21.23
SCALE: 1" = 20'

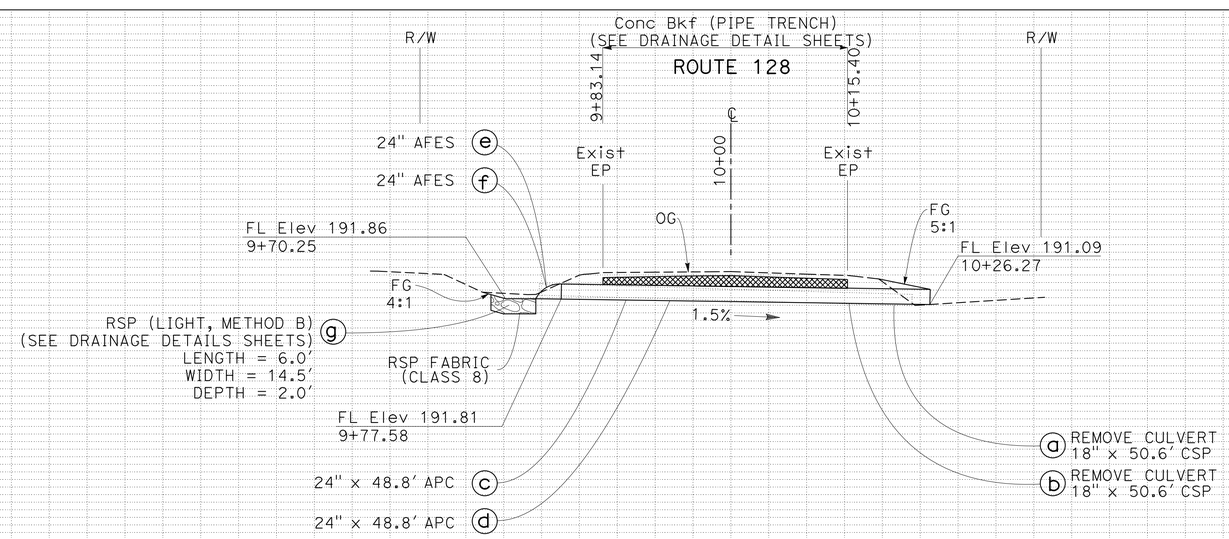

DRAINAGE SYSTEM 24

SCALE: Horiz 1" = 10'
Vert 1" = 10'

DRAINAGE PLAN AND PROFILES

SCALE AS SHOWN

D-22

Station	9+00	9+20	9+40	9+60	9+80	10+00	10+20	10+40	10+60	10+80	11+00
CY Exc											
CY Emb											

STATE OF CALIFORNIA - DEPARTMENT OF TRANSPORTATION
Caltrans® DIVISION OF ENGINEERING

FUNCTIONAL SUPERVISOR: ROBERT E. POLGAR
CALCULATED-DESIGNED BY: LARISA V. SASEVICH
CHECKED BY: R SCOTT FOSTER
REVISED BY / DATE REVISED

LAST REVISION 06-21-13
DATE PLOTTED => 07-AUG-2013
TIME PLOTTED => 14:57

Dist	COUNTY	ROUTE	POST MILES TOTAL PROJECT	SHEET No.	TOTAL SHEETS
01	Men	128	Var	28	106

REGISTERED CIVIL ENGINEER 6-24-13 DATE

6-24-13
PLANS APPROVAL DATE

REGISTERED PROFESSIONAL ENGINEER ROBERT E. POLGAR No. C 51768 Exp. 6-30-14 CIVIL STATE OF CALIFORNIA

THE STATE OF CALIFORNIA OR ITS OFFICERS OR AGENTS SHALL NOT BE RESPONSIBLE FOR THE ACCURACY OR COMPLETENESS OF SCANNED COPIES OF THIS PLAN SHEET.

T14N R15W MDB&M
SECTION 13

NOTES:
1. FOR ACCURATE RIGHT OF WAY DATA, CONTACT RIGHT OF WAY ENGINEERING AT THE DISTRICT OFFICE.
2. THIS PLAN ACCURATE FOR DRAINAGE WORK ONLY.
3. THE LOCATION OF RSP IS APPROXIMATE. THE EXACT PLACEMENT WILL BE DETERMINED IN THE FIELD BY THE ENGINEER.
4. FOR ROCK SLOPE PROTECTION DETAILS SEE DRAINAGE DETAIL SHEETS

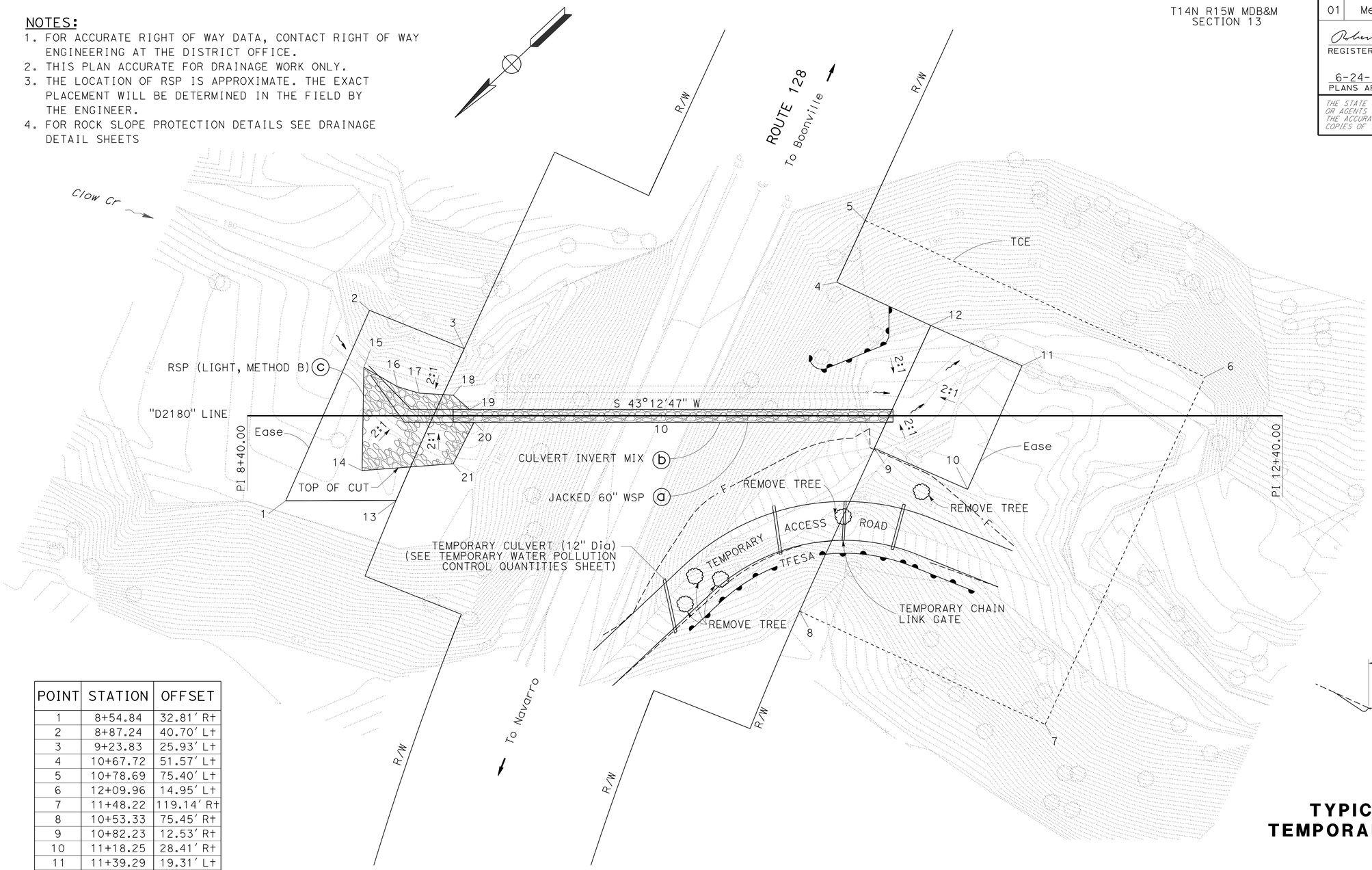

POINT	STATION	OFFSET
1	8+54.84	32.81' Rt
2	8+87.24	40.70' Lt
3	9+23.83	25.93' Lt
4	10+67.72	51.57' Lt
5	10+78.69	75.40' Lt
6	12+09.96	14.95' Lt
7	11+48.22	119.14' Rt
8	10+53.33	75.45' Rt
9	10+82.23	12.53' Rt
10	11+18.25	28.41' Rt
11	11+39.29	19.31' Lt
12	11+04.05	34.85' Lt
13	8+97.49	32.65' Rt
14	8+84.37	21.15' Rt
15	8+85.04	40.70' Lt
16	8+98.00	11.23' Lt
17	9+06.42	8.72' Lt
18	9+19.55	7.94' Lt
19	9+25.87	2.46' Lt
20	9+27.68	2.46' Rt
21	9+19.55	18.52' Rt

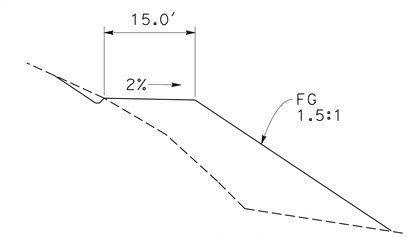

TYPICAL X-SECTION
TEMPORARY ACCESS ROAD
NO SCALE

DRAINAGE SYSTEM (25)
ROUTE 128
PM 21.80
SCALE: 1" = 20'

DRAINAGE PLAN
SCALE AS SHOWN

D-23

STATE OF CALIFORNIA - DEPARTMENT OF TRANSPORTATION
Caltrans
DIVISION OF ENGINEERING

FUNCTIONAL SUPERVISOR: ROBERT E. POLGAR
CALCULATED-DESIGNED BY: ROBERT E. POLGAR
CHECKED BY: TIMOTHY TRINH
REVISED BY / DATE REVISED

LAST REVISION 03-30-11 | DATE PLOTTED => 07-AUG-2013 | TIME PLOTTED => 14:57

Dist	COUNTY	ROUTE	POST MILES TOTAL PROJECT	SHEET No.	TOTAL SHEETS
01	Men	128	Var	29	106

Robert E. Polgar 6-24-13
REGISTERED CIVIL ENGINEER DATE

6-24-13
PLANS APPROVAL DATE

REGISTERED PROFESSIONAL ENGINEER ROBERT E. POLGAR No. C 51768 Exp. 6-30-14 CIVIL STATE OF CALIFORNIA

THE STATE OF CALIFORNIA OR ITS OFFICERS OR AGENTS SHALL NOT BE RESPONSIBLE FOR THE ACCURACY OR COMPLETENESS OF SCANNED COPIES OF THIS PLAN SHEET.

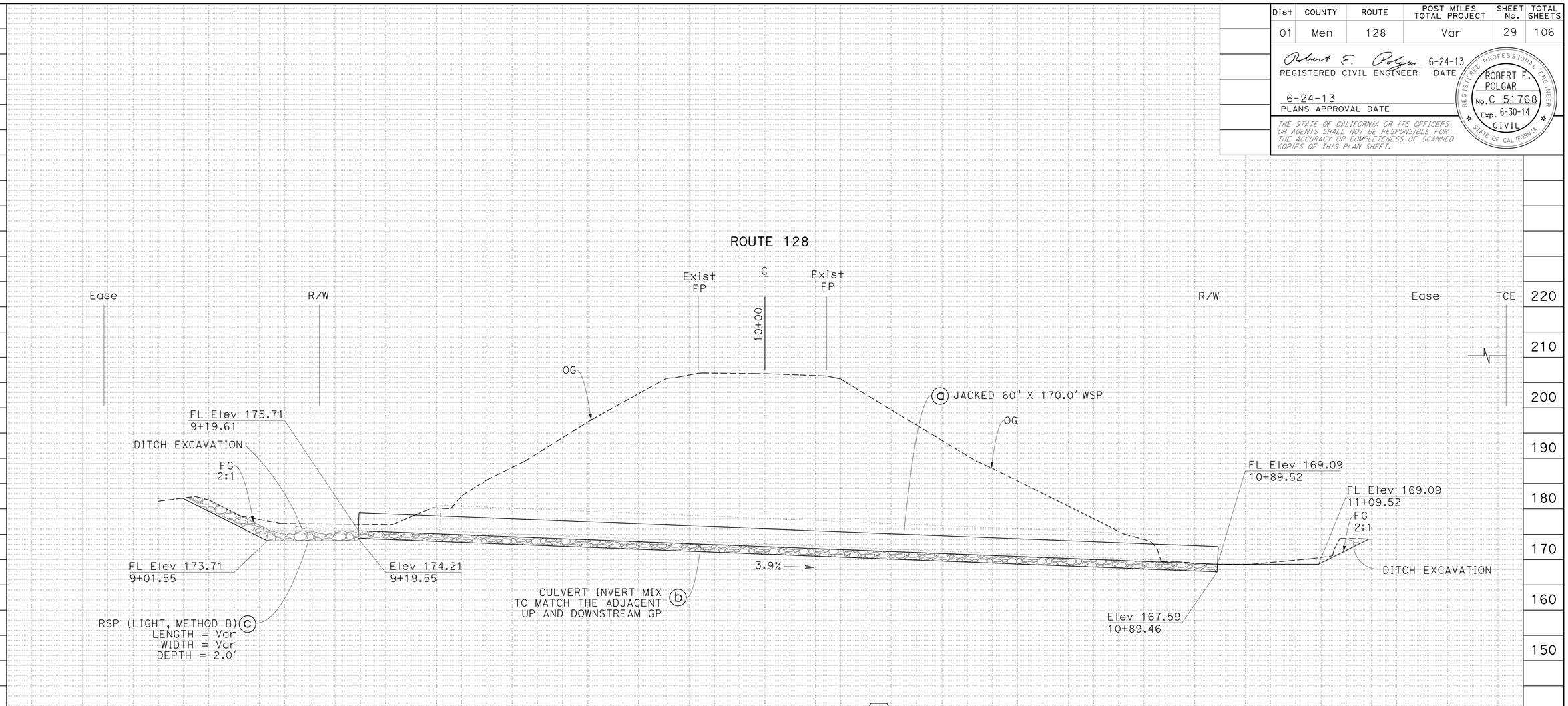

DRAINAGE SYSTEM 25

SCALE: Horiz 1" = 10'
Vert 1" = 10'

THIS PLAN ACCURATE FOR DRAINAGE WORK ONLY

DRAINAGE PROFILES

SCALE AS SHOWN

D-24

STATION		8+60	8+80	9+00	9+20	9+40	9+60	9+80	10+00	10+20	10+40	10+60	10+80	11+00	11+20	11+40	TOTAL
CY	Exc																
	Emb																

REVISED BY | DATE REVISED

ROBERT E. POLGAR — CALCULATED-DESIGNED BY
TIMOTHY TRINH — CHECKED BY

ROBERT E. POLGAR — FUNCTIONAL SUPERVISOR

STATE OF CALIFORNIA - DEPARTMENT OF TRANSPORTATION
Caltrans
DIVISION OF ENGINEERING

LAST REVISION 03-30-11
DATE PLOTTED => 07-AUG-2013
TIME PLOTTED => 14:57

Dist	COUNTY	ROUTE	POST MILES TOTAL PROJECT	SHEET No.	TOTAL SHEETS
01	Men	128	Var	30	106

Larisa V. Sasevich 6-24-13
REGISTERED CIVIL ENGINEER DATE

6-24-13
PLANS APPROVAL DATE

REGISTERED PROFESSIONAL ENGINEER LARISA V. SASEVICH No. C 71520 Exp. 12-31-13 CIVIL STATE OF CALIFORNIA

THE STATE OF CALIFORNIA OR ITS OFFICERS OR AGENTS SHALL NOT BE RESPONSIBLE FOR THE ACCURACY OR COMPLETENESS OF SCANNED COPIES OF THIS PLAN SHEET.

T14N R15W MDB&M
SECTION 13

NOTES:

1. FOR ACCURATE RIGHT OF WAY DATA, CONTACT RIGHT OF WAY ENGINEERING AT THE DISTRICT OFFICE.
2. THIS PLAN ACCURATE FOR DRAINAGE WORK ONLY.
3. FOR ROCK SLOPE PROTECTION DETAILS SEE DRAINAGE DETAIL SHEETS.

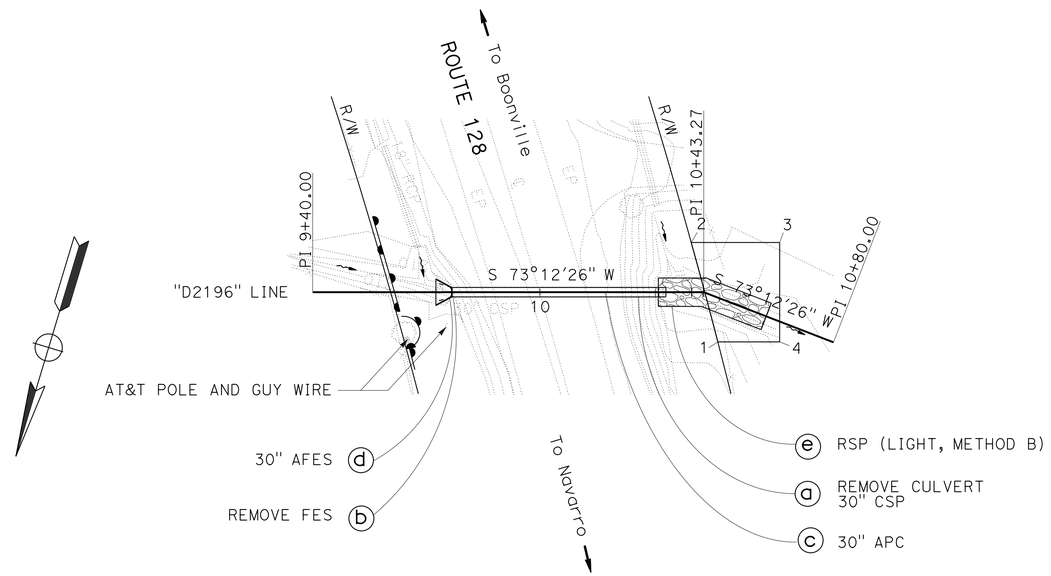

DRAINAGE SYSTEM 26
ROUTE 128
PM 21.96
SCALE: 1" = 20'

POINT	STATION	OFFSET
1	10+47.00	13.12' Rt
2	10+39.97	13.13' Lt
3	10+63.32	13.13' Lt
4	10+63.32	13.12' Rt

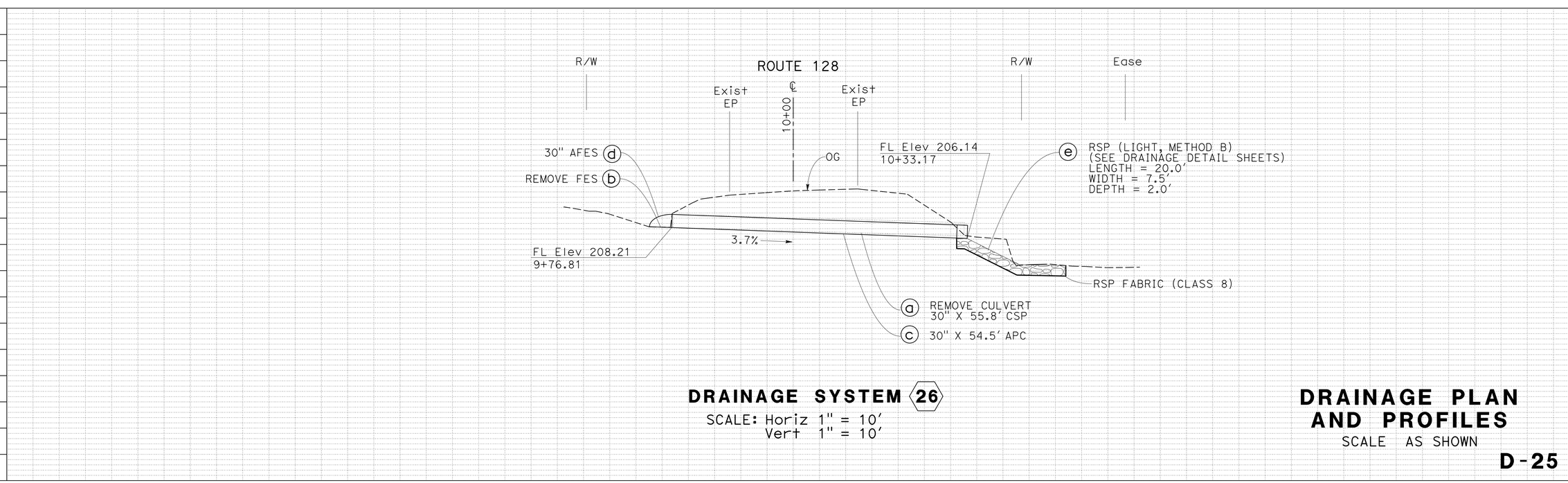

DRAINAGE SYSTEM 26
SCALE: Horiz 1" = 10'
Vert 1" = 10'

DRAINAGE PLAN AND PROFILES
SCALE AS SHOWN

D-25

REVISED BY	DATE REVISED

LARISA V. SASEVICH — R SCOTT FOSTER
CALCULATED-DESIGNED BY — CHECKED BY
FUNCTIONAL SUPERVISOR: ROBERT E. POLGAR

STATE OF CALIFORNIA - DEPARTMENT OF TRANSPORTATION
Caltrans® DIVISION OF ENGINEERING

LAST REVISION 06-21-13
DATE PLOTTED => 07-AUG-2013
TIME PLOTTED => 14:57

Dist	COUNTY	ROUTE	POST MILES TOTAL PROJECT	SHEET No.	TOTAL SHEETS
01	Men	128	Var	31	106

Larisa V. Sasevich 6-24-13
REGISTERED CIVIL ENGINEER DATE

6-24-13
PLANS APPROVAL DATE

REGISTERED PROFESSIONAL ENGINEER LARISA V. SASEVICH No. C 71520 Exp. 12-31-13 CIVIL STATE OF CALIFORNIA

THE STATE OF CALIFORNIA OR ITS OFFICERS OR AGENTS SHALL NOT BE RESPONSIBLE FOR THE ACCURACY OR COMPLETENESS OF SCANNED COPIES OF THIS PLAN SHEET.

T14N R14W MDB&M
SECTION 18

NOTES:

1. FOR ACCURATE RIGHT OF WAY DATA, CONTACT RIGHT OF WAY ENGINEERING AT THE DISTRICT OFFICE.
2. THIS PLAN ACCURATE FOR DRAINAGE WORK ONLY.
3. FOR CONCRETE BACKFILL (PIPE TRENCH) DETAILS SEE DRAINAGE DETAIL SHEETS.

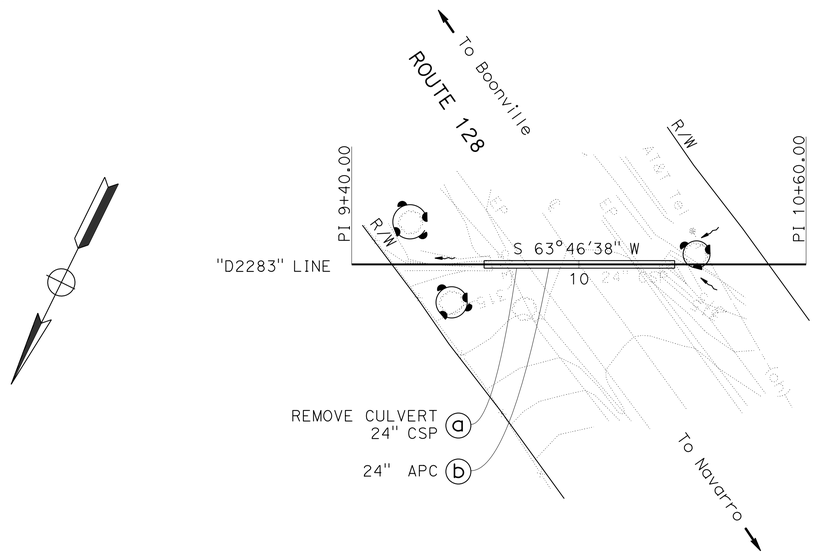

DRAINAGE SYSTEM (27)
ROUTE 128
PM 22.83
SCALE: 1" = 20'

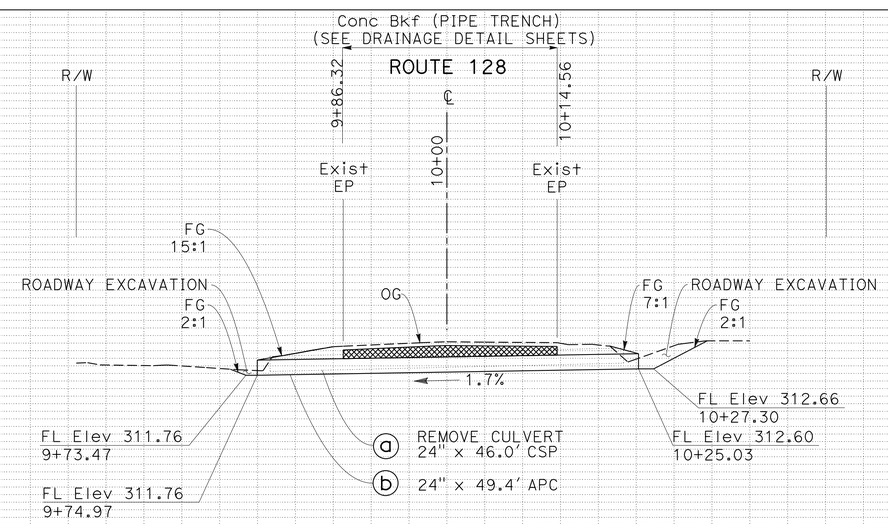

DRAINAGE SYSTEM (27)
SCALE: Horiz 1" = 10'
Vert 1" = 10'

DRAINAGE PLAN AND PROFILES
SCALE AS SHOWN

D-26

Station	9+00	9+20	9+40	9+60	9+80	10+00	10+20	10+40	10+60	10+80	11+00
CY Exc											
CY Emb											

STATE OF CALIFORNIA - DEPARTMENT OF TRANSPORTATION
Caltrans® DIVISION OF ENGINEERING
FUNCTIONAL SUPERVISOR: ROBERT E. POLGAR
CALCULATED-DESIGNED BY: LARISA V. SASEVICH
CHECKED BY: TIMOTHY TRINH
REVISED BY / DATE REVISED

LAST REVISION 03-30-11
DATE PLOTTED => 07-AUG-2013
TIME PLOTTED => 14:57

Dist	COUNTY	ROUTE	POST MILES TOTAL PROJECT	SHEET No.	TOTAL SHEETS
01	Men	128	Var	32	106

REGISTERED CIVIL ENGINEER 6-24-13 DATE

6-24-13
PLANS APPROVAL DATE

REGISTERED PROFESSIONAL ENGINEER ROBERT E. POLGAR No. C 51768 Exp. 06-30-14 CIVIL STATE OF CALIFORNIA

THE STATE OF CALIFORNIA OR ITS OFFICERS OR AGENTS SHALL NOT BE RESPONSIBLE FOR THE ACCURACY OR COMPLETENESS OF SCANNED COPIES OF THIS PLAN SHEET.

T14N R14W MDB&M
SECTION 18

NOTES:

1. FOR ACCURATE RIGHT OF WAY DATA, CONTACT RIGHT OF WAY ENGINEERING AT THE DISTRICT OFFICE.
2. THIS PLAN ACCURATE FOR DRAINAGE WORK ONLY.
3. FOR ROCK SLOPE PROTECTION DETAILS SEE DRAINAGE DETAIL SHEETS.
4. FOR CONCRETE BACKFILL (PIPE TRENCH) DETAILS SEE DRAINAGE DETAIL SHEETS.
5. FOR MINOR CONCRETE (Misc CONSTRUCTION) AND MINOR CONCRETE (GUTTER) DETAIL, SEE CONSTRUCTION DETAIL SHEET.

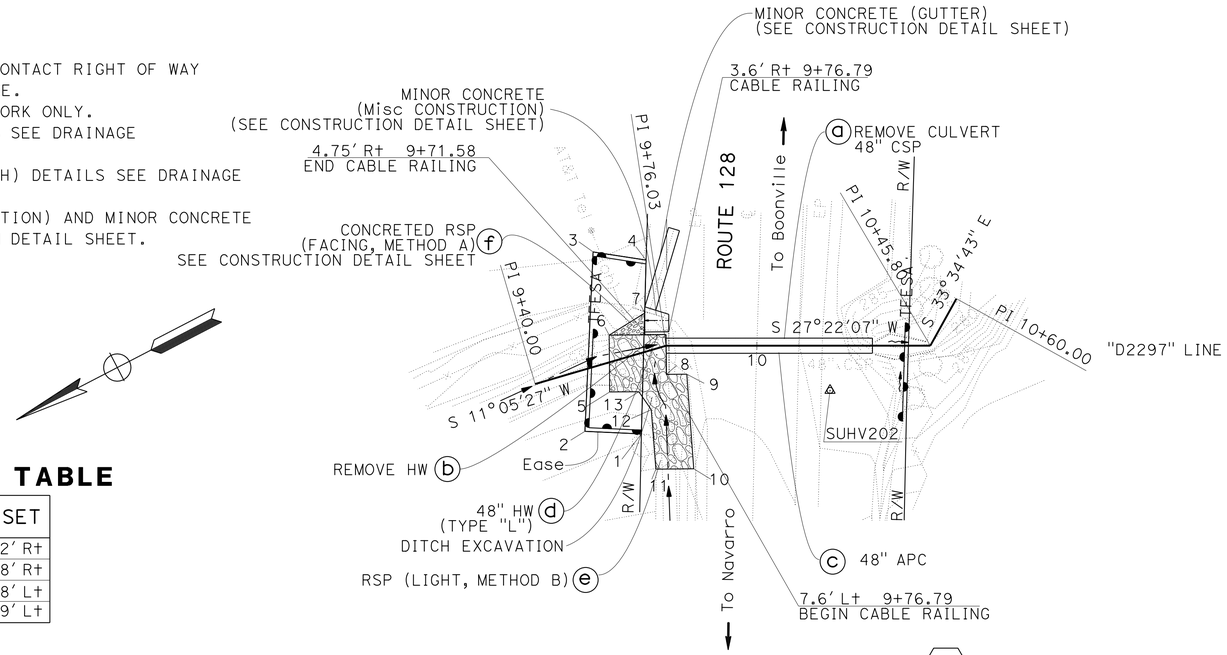

DRAINAGE SYSTEM 28

ROUTE 128
PM 22.97
SCALE: 1" = 20'

EASEMENT AREA TABLE

POINT	STATION	OFFSET
1	9+63.23	20.52' Rt
2	9+49.11	15.68' Rt
3	9+64.47	29.18' Lt
4	9+76.03	23.19' Lt

RSP AREA TABLE

POINT	STATION	OFFSET
5	9+58.31	7.53' Rt
6	9+62.38	6.90' Lt
7	9+73.05	9.87' Lt
8	9+76.09	7.56' Rt
9	9+81.49	7.51' Rt
10	9+83.32	32.50' Rt
11	9+64.29	30.52' Rt
12	9+67.53	15.11' Rt
13	9+65.72	9.64' Rt

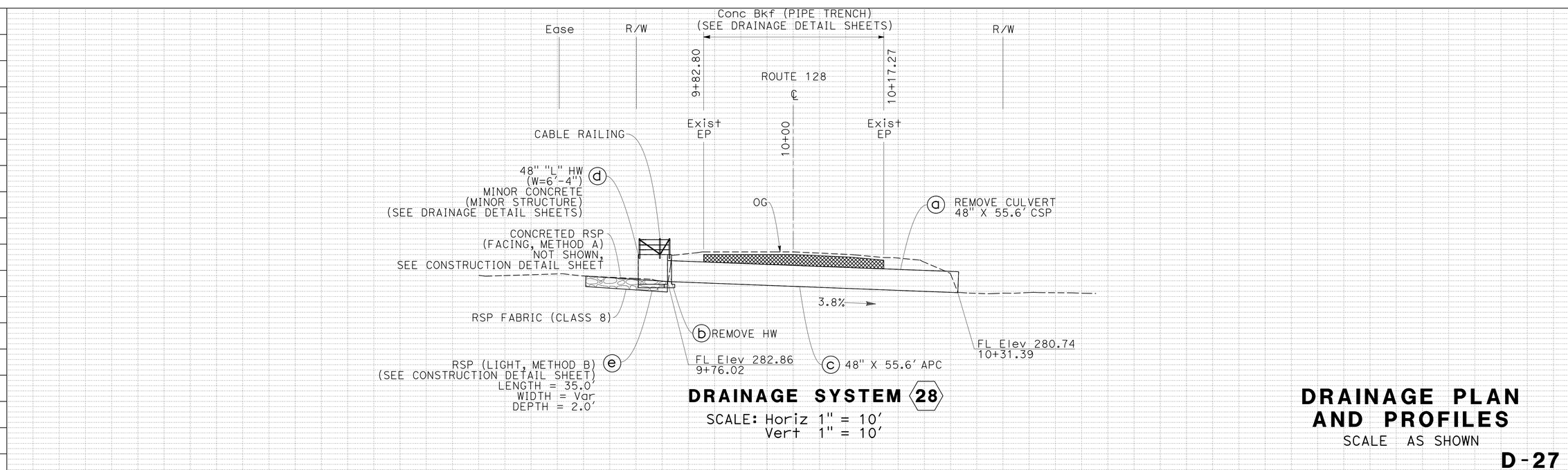

DRAINAGE SYSTEM 28

SCALE: Horiz 1" = 10'
Vert 1" = 10'

DRAINAGE PLAN AND PROFILES

SCALE AS SHOWN

D-27

STATE OF CALIFORNIA - DEPARTMENT OF TRANSPORTATION
DIVISION OF ENGINEERING
FUNCTIONAL SUPERVISOR: ROBERT E. POLGAR
CALCULATED-DESIGNED BY: ROBERT E. POLGAR
CHECKED BY: TIMOTHY TRINH
REVISED BY: MZ
DATE REVISED

LAST REVISION 03-30-11
DATE PLOTTED => 07-AUG-2013
TIME PLOTTED => 14:57

Dist	COUNTY	ROUTE	POST MILES TOTAL PROJECT	SHEET No.	TOTAL SHEETS
01	Men	128	Var	33	106

Larisa V. Sasevich 6-24-13
REGISTERED CIVIL ENGINEER DATE

6-24-13
PLANS APPROVAL DATE

REGISTERED PROFESSIONAL ENGINEER LARISA V. SASEVICH No. C 71520 Exp. 12-31-13 CIVIL STATE OF CALIFORNIA

THE STATE OF CALIFORNIA OR ITS OFFICERS OR AGENTS SHALL NOT BE RESPONSIBLE FOR THE ACCURACY OR COMPLETENESS OF SCANNED COPIES OF THIS PLAN SHEET.

T14N R14W MDB&M
SECTION 20

NOTES:

1. FOR ACCURATE RIGHT OF WAY DATA, CONTACT RIGHT OF WAY ENGINEERING AT THE DISTRICT OFFICE.
2. THIS PLAN ACCURATE FOR DRAINAGE WORK ONLY.
3. INLET STRUCTURE SKEW ANGLE IS MEASURED FROM A LINE PERPENDICULAR TO THE CULVERT ALIGNMENT.

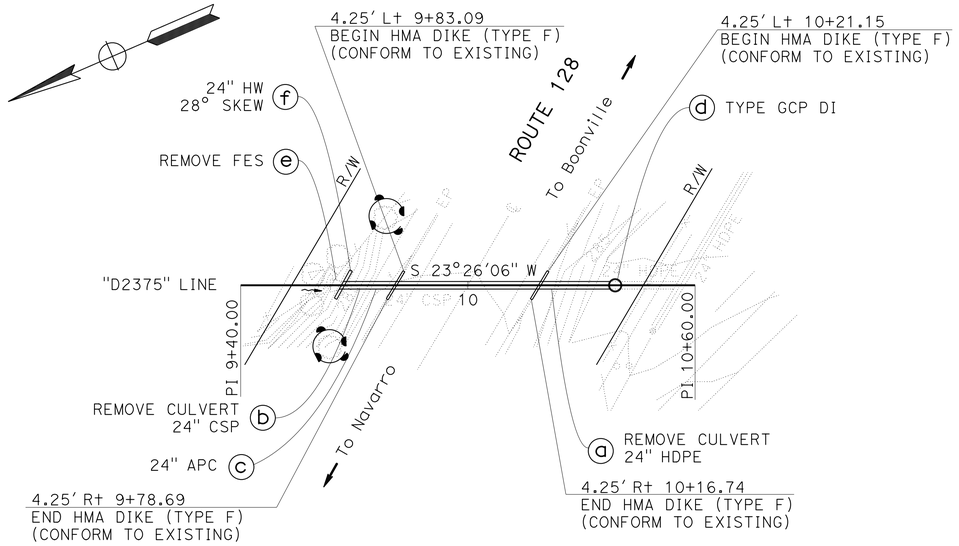

DRAINAGE SYSTEM (29)
ROUTE 128
PM 23.75
SCALE: 1" = 20'

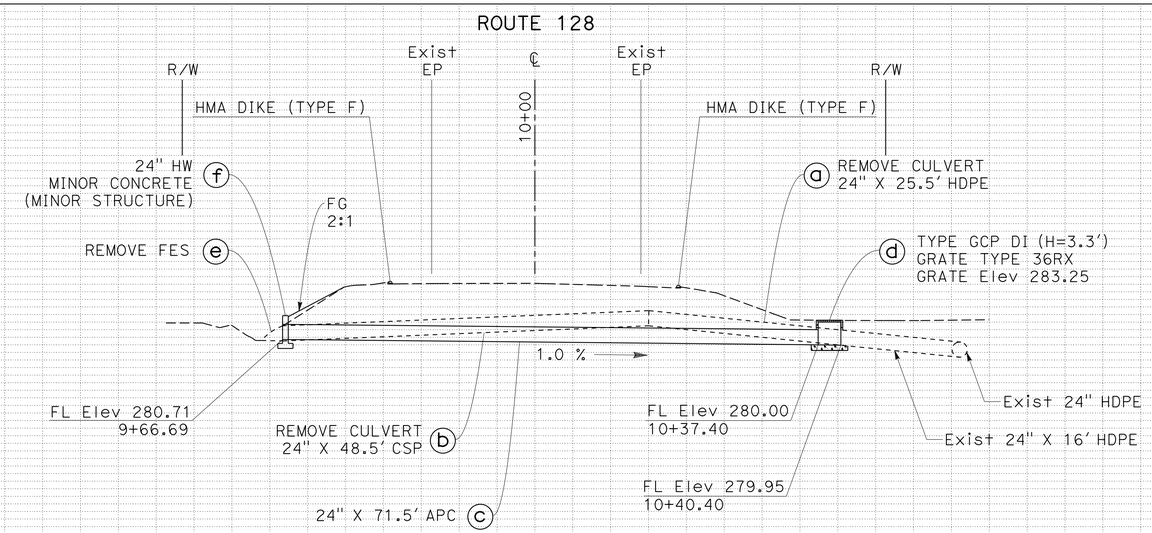

DRAINAGE SYSTEM (29)
SCALE: Horiz 1" = 10'
Vert 1" = 10'

DRAINAGE PLAN AND PROFILES
SCALE AS SHOWN

D-28

Station	9+00	9+20	9+40	9+60	9+80	10+00	10+20	10+40	10+60	10+80	11+00
CY Exc											
CY Emb											

300 290 280 270

REVISED BY | DATE REVISED
LARISA V. SASEVICH | TIMOTHY TRINH
CALCULATED-DESIGNED BY | CHECKED BY
FUNCTIONAL SUPERVISOR: ROBERT E. POLGAR

STATE OF CALIFORNIA - DEPARTMENT OF TRANSPORTATION
Caltrans® DIVISION OF ENGINEERING

LAST REVISION 03-30-11
DATE PLOTTED => 07-AUG-2013
TIME PLOTTED => 14:57

Dist	COUNTY	ROUTE	POST MILES TOTAL PROJECT	SHEET No.	TOTAL SHEETS
01	Men	128	Var	34	106

Larisa V. Sasevich 6-24-13
REGISTERED CIVIL ENGINEER DATE

6-24-13
PLANS APPROVAL DATE

REGISTERED PROFESSIONAL ENGINEER LARISA V. SASEVICH No. C 71520 Exp. 12-31-13 CIVIL STATE OF CALIFORNIA

THE STATE OF CALIFORNIA OR ITS OFFICERS OR AGENTS SHALL NOT BE RESPONSIBLE FOR THE ACCURACY OR COMPLETENESS OF SCANNED COPIES OF THIS PLAN SHEET.

T14N R14W MDB&M
SECTION 20

NOTES:

1. FOR ACCURATE RIGHT OF WAY DATA, CONTACT RIGHT OF WAY ENGINEERING AT THE DISTRICT OFFICE.
2. THIS PLAN ACCURATE FOR DRAINAGE WORK ONLY.
3. FOR ROCK SLOPE PROTECTION DETAILS SEE DRAINAGE DETAIL SHEETS.
4. FOR CONCRETE BACKFILL (PIPE TRENCH) DETAILS SEE DRAINAGE DETAIL SHEETS.

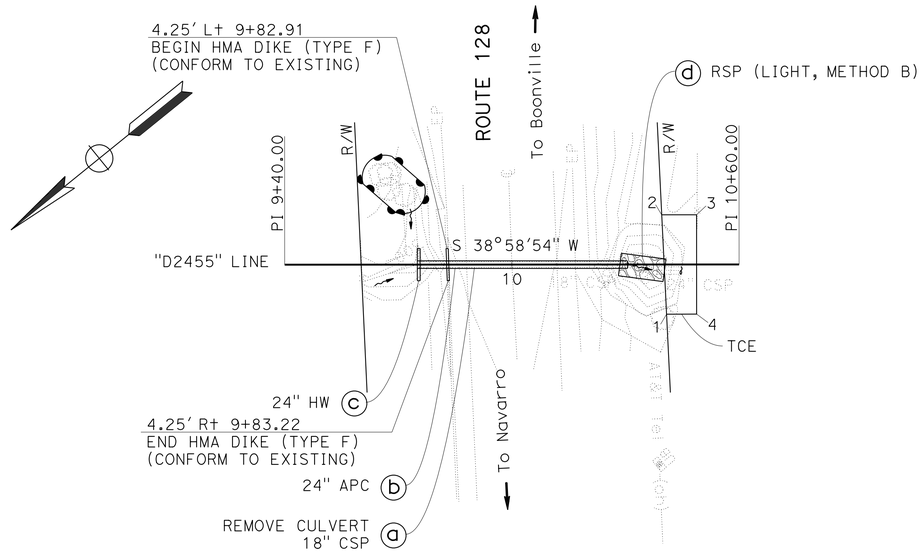

DRAINAGE SYSTEM 30

ROUTE 128
PM 24.55
SCALE: 1" = 20'

POINT	STATION	OFFSET
1	10+40.84	13.12' R+
2	10+39.58	13.12' L+
3	10+48.78	13.12' L+
4	10+48.79	13.12' R+

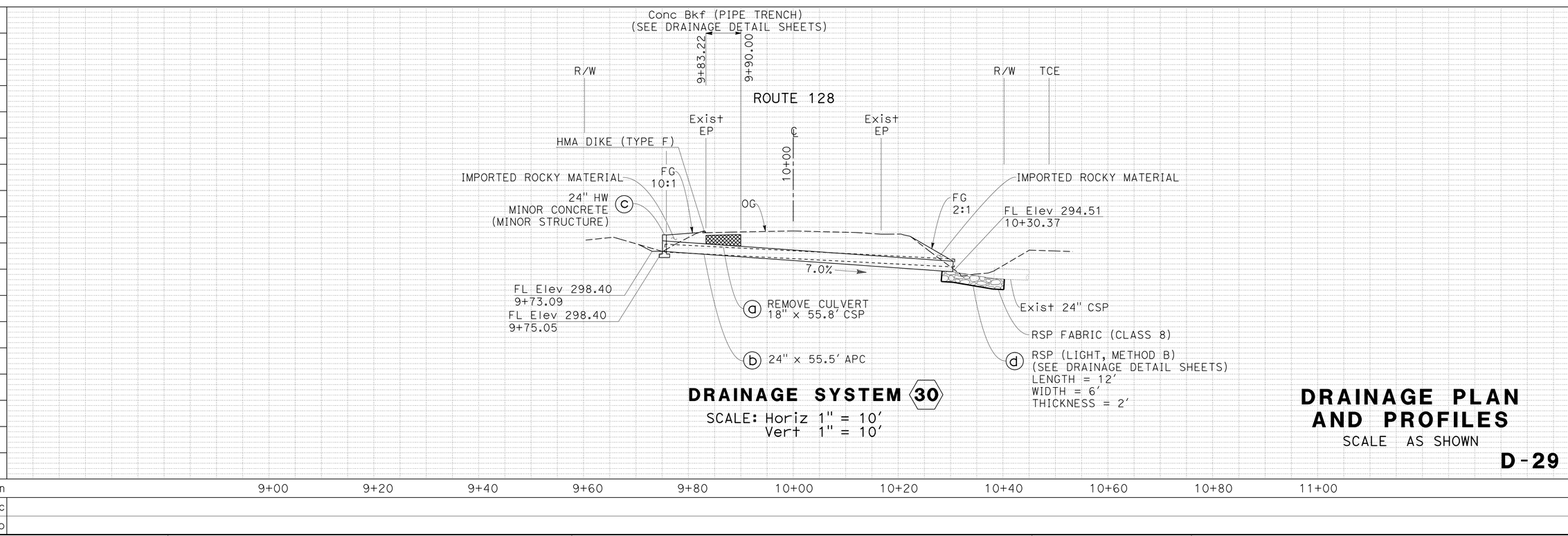

DRAINAGE SYSTEM 30

SCALE: Horiz 1" = 10'
Vert 1" = 10'

DRAINAGE PLAN AND PROFILES

SCALE AS SHOWN

D-29

REVISED BY | DATE REVISED
LARISA V. SASEVICH | TIMOTHY TRINH
CALCULATED-DESIGNED BY | CHECKED BY
FUNCTIONAL SUPERVISOR: ROBERT E. POLGAR

STATE OF CALIFORNIA - DEPARTMENT OF TRANSPORTATION
DIVISION OF ENGINEERING
Caltrans

LAST REVISION 03-30-11
DATE PLOTTED => 07-AUG-2013
TIME PLOTTED => 14:57

Dist	COUNTY	ROUTE	POST MILES TOTAL PROJECT	SHEET No.	TOTAL SHEETS
01	Men	128	Var	35	106

REGISTERED CIVIL ENGINEER 6-24-13 DATE

6-24-13
PLANS APPROVAL DATE

ROBERT E. POLGAR No. C 51768 Exp. 6-30-14 CIVIL — REGISTERED PROFESSIONAL ENGINEER — STATE OF CALIFORNIA

THE STATE OF CALIFORNIA OR ITS OFFICERS OR AGENTS SHALL NOT BE RESPONSIBLE FOR THE ACCURACY OR COMPLETENESS OF SCANNED COPIES OF THIS PLAN SHEET.

T14N R14W MDB&M
SECTION 34

NOTES:

1. FOR ACCURATE RIGHT OF WAY DATA, CONTACT RIGHT OF WAY ENGINEERING AT THE DISTRICT OFFICE.
2. THIS PLAN ACCURATE FOR DRAINAGE WORK ONLY.
3. RSP SHALL BE PLACED IN ROADSIDE DITCH PER DIRECTION OF ENGINEER.

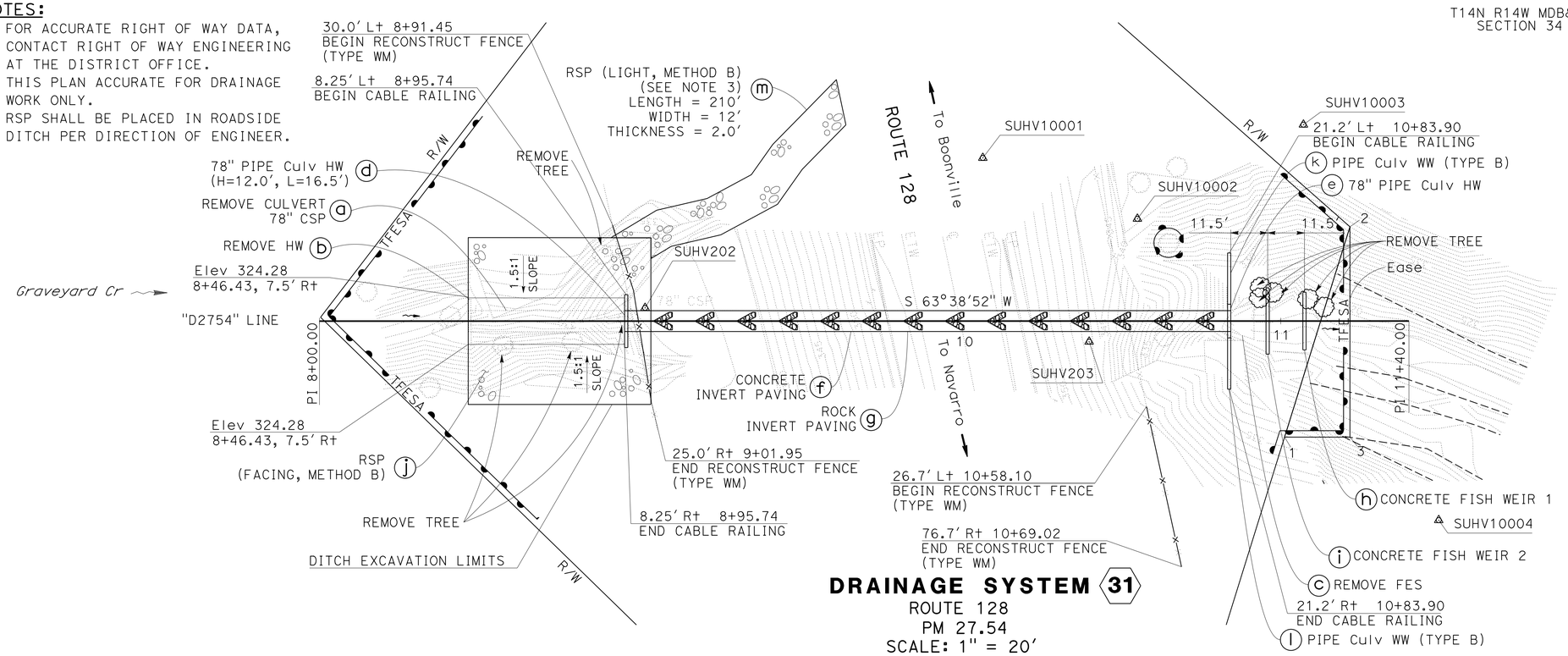

POINT	STATION	OFFSET
1	11+01.19	36.20' Rt
2	11+21.59	29.42' Lt
3	11+21.59	36.20' Lt

DRAINAGE SYSTEM 31

ROUTE 128
PM 27.54
SCALE: 1" = 20'

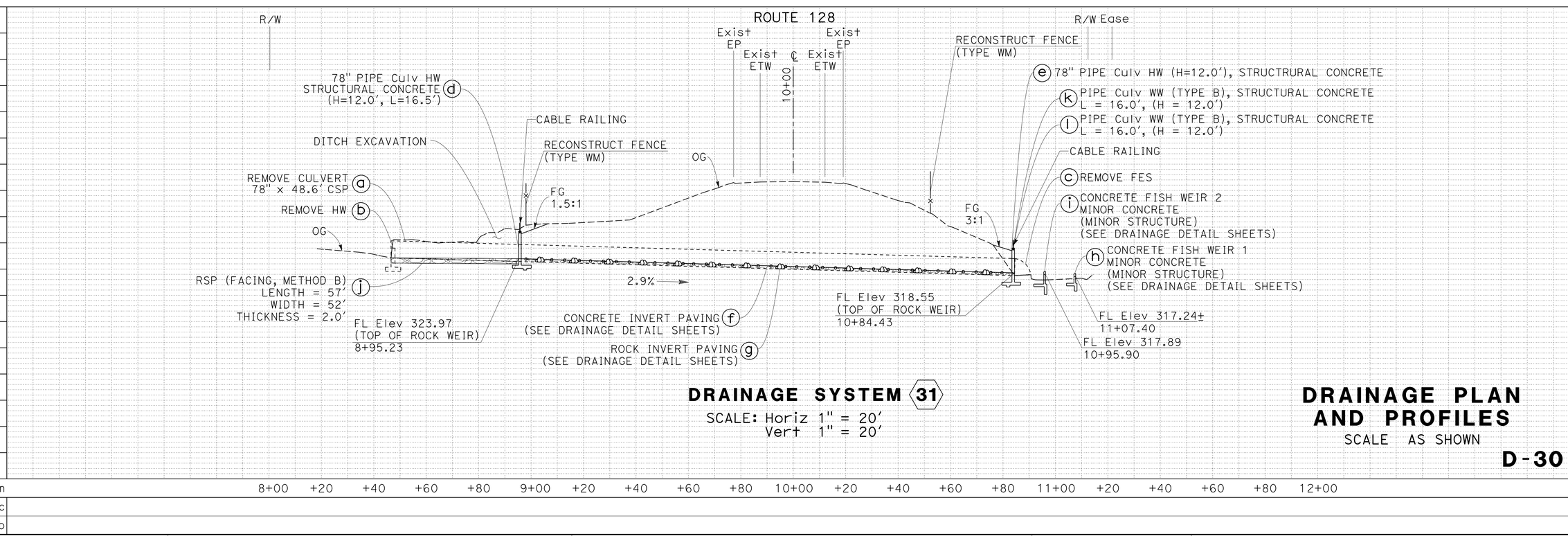

DRAINAGE SYSTEM 31

SCALE: Horiz 1" = 20'
Vert 1" = 20'

DRAINAGE PLAN AND PROFILES

SCALE AS SHOWN

D-30

STATE OF CALIFORNIA - DEPARTMENT OF TRANSPORTATION
DIVISION OF ENGINEERING
FUNCTIONAL SUPERVISOR: ROBERT E. POLGAR
CALCULATED-DESIGNED BY: TIMOTHY TRINH
CHECKED BY: ROBERT E. POLGAR
REVISED BY / DATE REVISED

LAST REVISION 03-30-11
DATE PLOTTED => 07-AUG-2013
TIME PLOTTED => 14:57

Dist	COUNTY	ROUTE	POST MILES TOTAL PROJECT	SHEET No.	TOTAL SHEETS
01	Men	128	Var	36	106

Larisa V. Sasevich 6-24-13
REGISTERED CIVIL ENGINEER DATE

6-24-13
PLANS APPROVAL DATE

REGISTERED PROFESSIONAL ENGINEER LARISA V. SASEVICH No. C 71520 Exp. 12-31-13 CIVIL STATE OF CALIFORNIA

THE STATE OF CALIFORNIA OR ITS OFFICERS OR AGENTS SHALL NOT BE RESPONSIBLE FOR THE ACCURACY OR COMPLETENESS OF SCANNED COPIES OF THIS PLAN SHEET.

T13N R14W MDB&M
SECTION 12

NOTES:
1. FOR ACCURATE RIGHT OF WAY DATA, CONTACT RIGHT OF WAY ENGINEERING AT THE DISTRICT OFFICE.
2. THIS PLAN ACCURATE FOR DRAINAGE WORK ONLY.

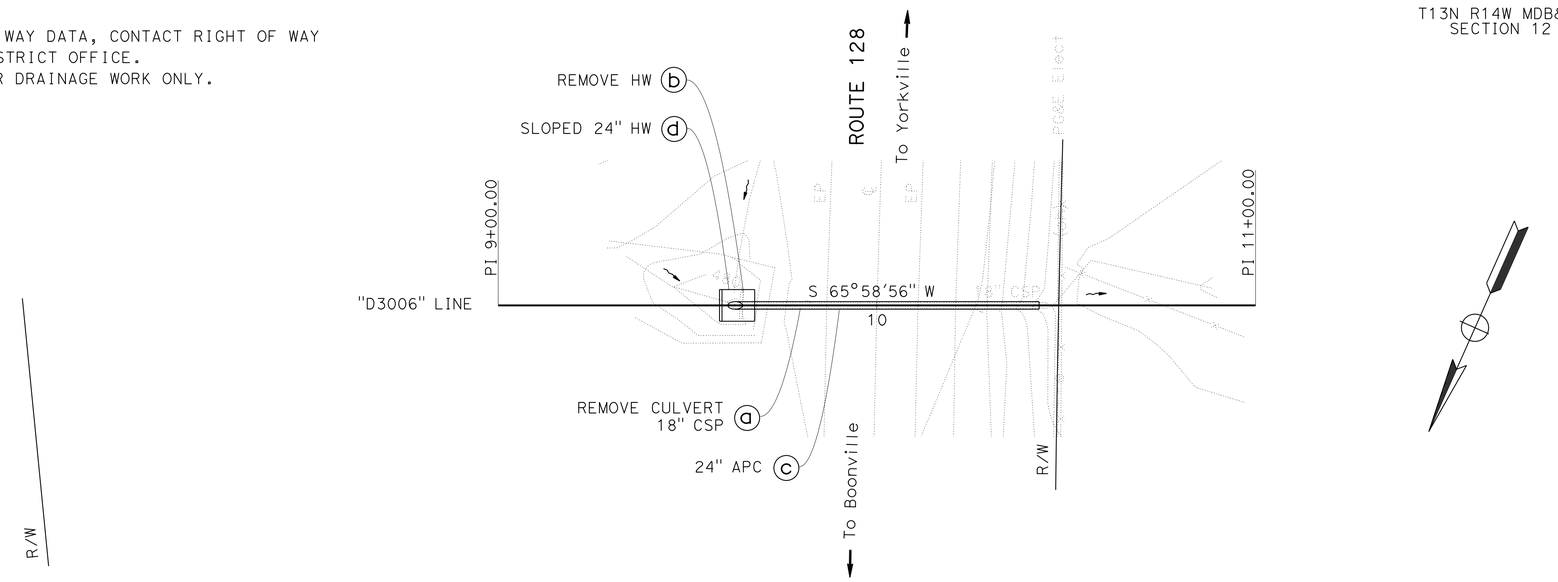

DRAINAGE SYSTEM 32
ROUTE 128
PM 30.06
SCALE: 1" = 20'

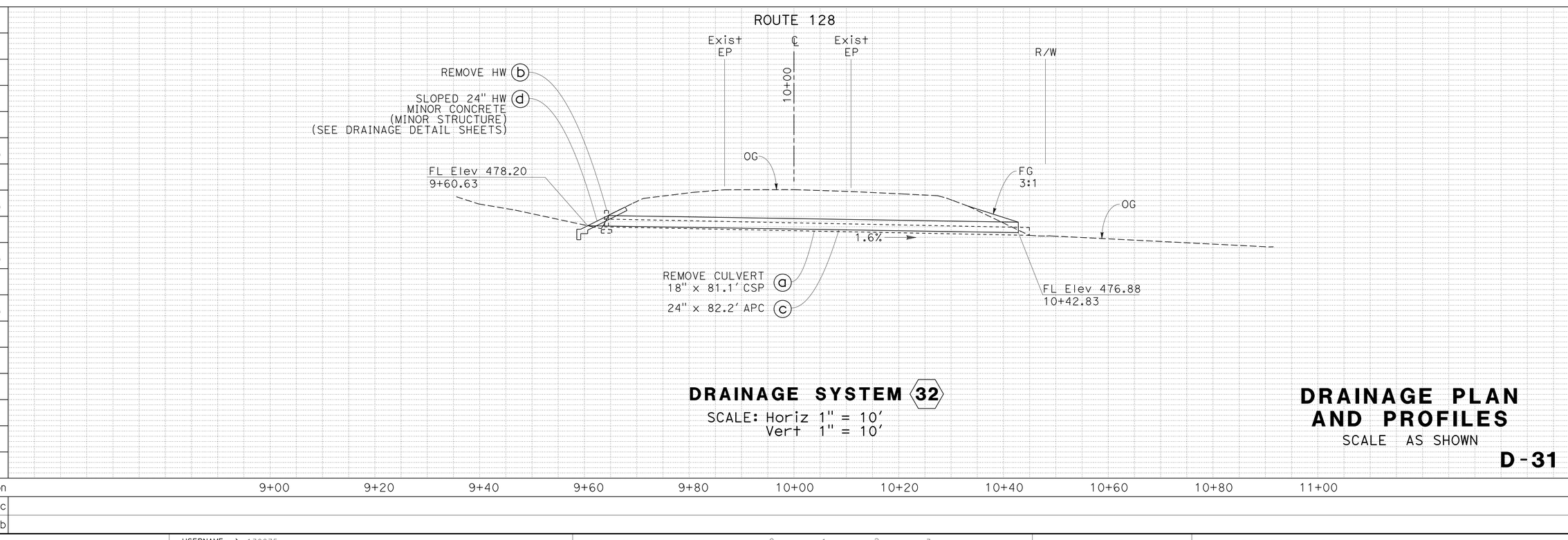

DRAINAGE SYSTEM 32
SCALE: Horiz 1" = 10'
Vert 1" = 10'

DRAINAGE PLAN AND PROFILES
SCALE AS SHOWN

D-31

REVISED BY	DATE REVISED

LARISA V. SASEVICH
TIMOTHY TRINH

CALCULATED-DESIGNED BY
CHECKED BY

FUNCTIONAL SUPERVISOR
ROBERT E. POLGAR

STATE OF CALIFORNIA - DEPARTMENT OF TRANSPORTATION
Caltrans
DIVISION OF ENGINEERING

LAST REVISION 03-30-11
DATE PLOTTED => 07-AUG-2013
TIME PLOTTED => 14:57

Dist	COUNTY	ROUTE	POST MILES TOTAL PROJECT	SHEET No.	TOTAL SHEETS
01	Men	128	Var	37	106

Larisa V. Sasevich 6-24-13
REGISTERED CIVIL ENGINEER DATE

6-24-13
PLANS APPROVAL DATE

REGISTERED PROFESSIONAL ENGINEER LARISA V. SASEVICH No. C 71520 Exp. 12-31-13 CIVIL STATE OF CALIFORNIA

THE STATE OF CALIFORNIA OR ITS OFFICERS OR AGENTS SHALL NOT BE RESPONSIBLE FOR THE ACCURACY OR COMPLETENESS OF SCANNED COPIES OF THIS PLAN SHEET.

T13N R14W MDB&M
SECTION 13

NOTES:
1. FOR ACCURATE RIGHT OF WAY DATA, CONTACT RIGHT OF WAY ENGINEERING AT THE DISTRICT OFFICE.
2. THIS PLAN ACCURATE FOR DRAINAGE WORK ONLY.
3. FOR ROCK SLOPE PROTECTION DETAILS SEE DRAINAGE DETAIL SHEETS.
4. INLET STRUCTURE SKEW ANGLE IS MEASURED FROM A LINE PERPENDICULAR TO THE CULVERT ALIGNMENT.

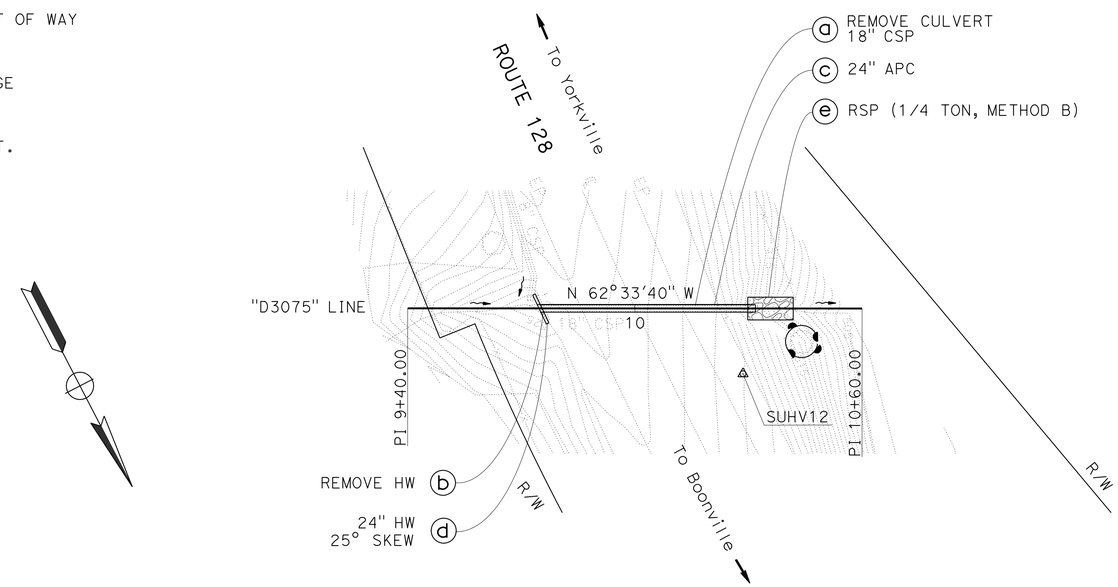

DRAINAGE SYSTEM 33
ROUTE 128
PM 30.75
SCALE: 1" = 20'

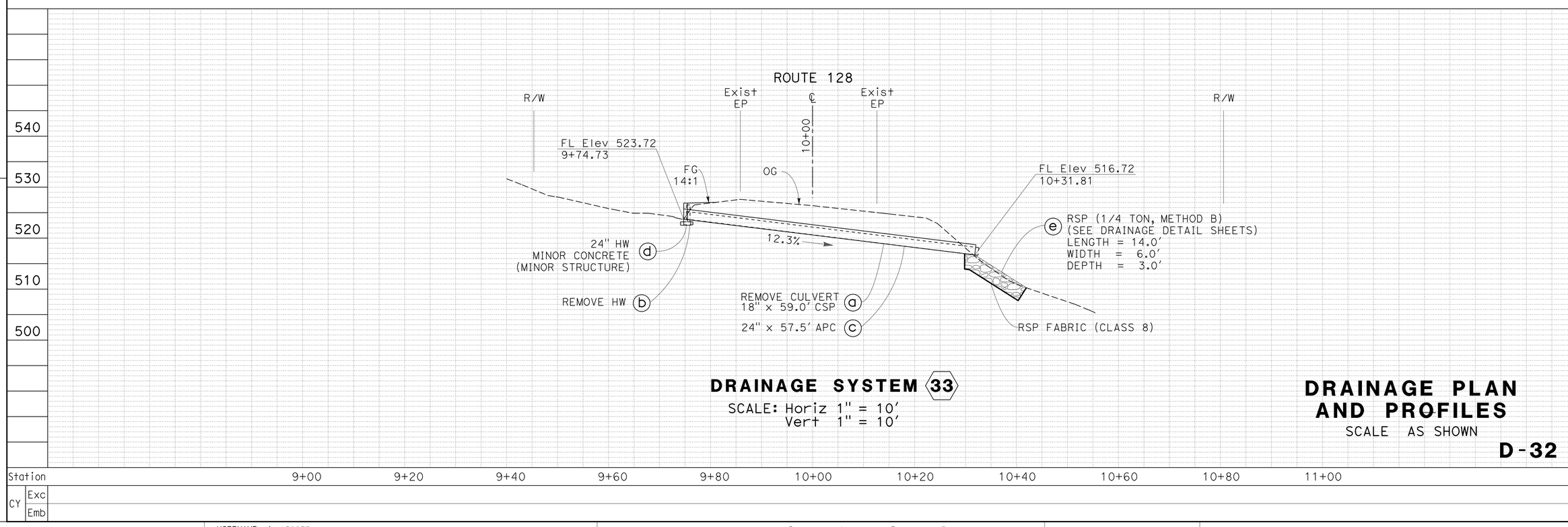

DRAINAGE SYSTEM 33
SCALE: Horiz 1" = 10'
Vert 1" = 10'

DRAINAGE PLAN AND PROFILES
SCALE AS SHOWN

D-32

REVISED BY	DATE REVISED

LARISA V. SASEVICH — TIMOTHY TRINH
CALCULATED-DESIGNED BY — CHECKED BY
FUNCTIONAL SUPERVISOR — ROBERT E. POLGAR

STATE OF CALIFORNIA - DEPARTMENT OF TRANSPORTATION
Caltrans® DIVISION OF ENGINEERING

LAST REVISION 03-30-11
DATE PLOTTED => 07-AUG-2013
TIME PLOTTED => 14:57

Dist	COUNTY	ROUTE	POST MILES TOTAL PROJECT	SHEET No.	TOTAL SHEETS
01	Men	128	Var	38	106

Larisa V. Sasevich 6-24-13
REGISTERED CIVIL ENGINEER DATE

6-24-13
PLANS APPROVAL DATE

REGISTERED PROFESSIONAL ENGINEER LARISA V. SASEVICH No. C 71520 Exp. 12-31-13 CIVIL STATE OF CALIFORNIA

THE STATE OF CALIFORNIA OR ITS OFFICERS OR AGENTS SHALL NOT BE RESPONSIBLE FOR THE ACCURACY OR COMPLETENESS OF SCANNED COPIES OF THIS PLAN SHEET.

T13N R14W MDB&M
SECTION 13

NOTES:

1. FOR ACCURATE RIGHT OF WAY DATA, CONTACT RIGHT OF WAY ENGINEERING AT THE DISTRICT OFFICE.
2. THIS PLAN ACCURATE FOR DRAINAGE WORK ONLY.
3. FOR CONCRETE BACKFILL (PIPE TRENCH) DETAILS SEE DRAINAGE DETAIL SHEETS.

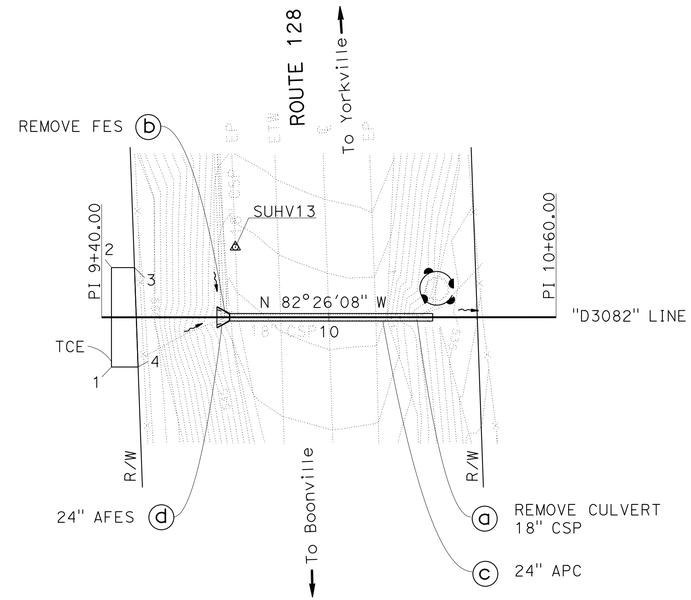

DRAINAGE SYSTEM 34
ROUTE 128
PM 30.82
SCALE: 1" = 20'

POINT	STATION	OFFSET
1	9+42.58	13.12' R+
2	9+42.59	13.12' L+
3	9+48.67	13.12' L+
4	9+49.61	13.12' R+

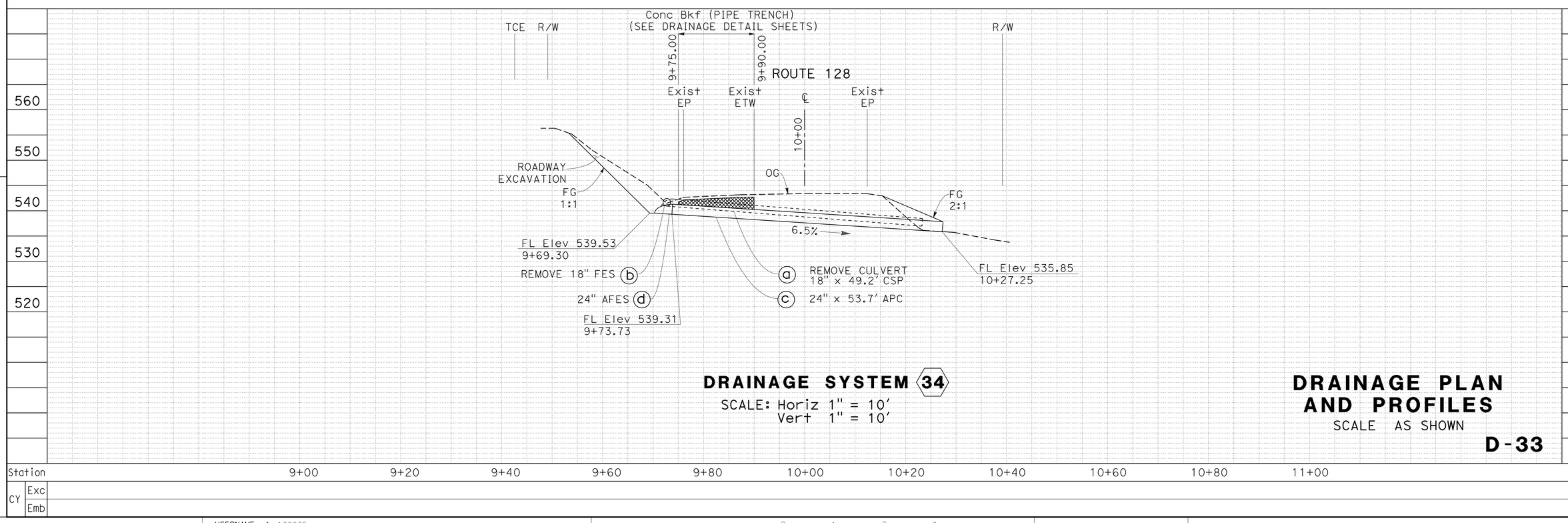

DRAINAGE SYSTEM 34
SCALE: Horiz 1" = 10'
Vert 1" = 10'

DRAINAGE PLAN AND PROFILES

SCALE AS SHOWN

D-33

REVISED BY | DATE REVISED
LARISA V. SASEVICH | TIMOTHY TRINH
CALCULATED-DESIGNED BY | CHECKED BY
FUNCTIONAL SUPERVISOR: ROBERT E. POLGAR

STATE OF CALIFORNIA - DEPARTMENT OF TRANSPORTATION
Caltrans® DIVISION OF ENGINEERING

LAST REVISION 03-30-11
DATE PLOTTED => 07-AUG-2013
TIME PLOTTED => 14:57

Dist	COUNTY	ROUTE	POST MILES TOTAL PROJECT	SHEET No.	TOTAL SHEETS
01	Men	128	Var	39	106

Robert E. Polgar 6-24-13
REGISTERED CIVIL ENGINEER DATE

6-24-13
PLANS APPROVAL DATE

REGISTERED PROFESSIONAL ENGINEER ROBERT E. POLGAR No. C 51768 Exp. 6-30-14 CIVIL STATE OF CALIFORNIA

THE STATE OF CALIFORNIA OR ITS OFFICERS OR AGENTS SHALL NOT BE RESPONSIBLE FOR THE ACCURACY OR COMPLETENESS OF SCANNED COPIES OF THIS PLAN SHEET.

T13N R14W MDB&M
SECTION 13

NOTES:

1. FOR ACCURATE RIGHT OF WAY DATA, CONTACT RIGHT OF WAY ENGINEERING AT THE DISTRICT OFFICE.
2. THIS PLAN ACCURATE FOR DRAINAGE WORK ONLY.
3. FOR ROCK SLOPE PROTECTION DETAILS SEE DRAINAGE DETAIL SHEETS.
4. THE ANGLE OF ELBOW IS APPROXIMATE. THE EXACT ANGLE WILL BE DETERMINED IN THE FIELD BY THE ENGINEER.
5. PIPE STAKES FOR ANCHOR ASSEMBLY TO BE INSERTED THROUGH BRACKET WELDED TO DOWNDRAIN.
6. INLET STRUCTURE SKEW ANGLE IS MEASURED FROM A LINE PERPENDICULAR TO THE CULVERT ALIGNMENT.

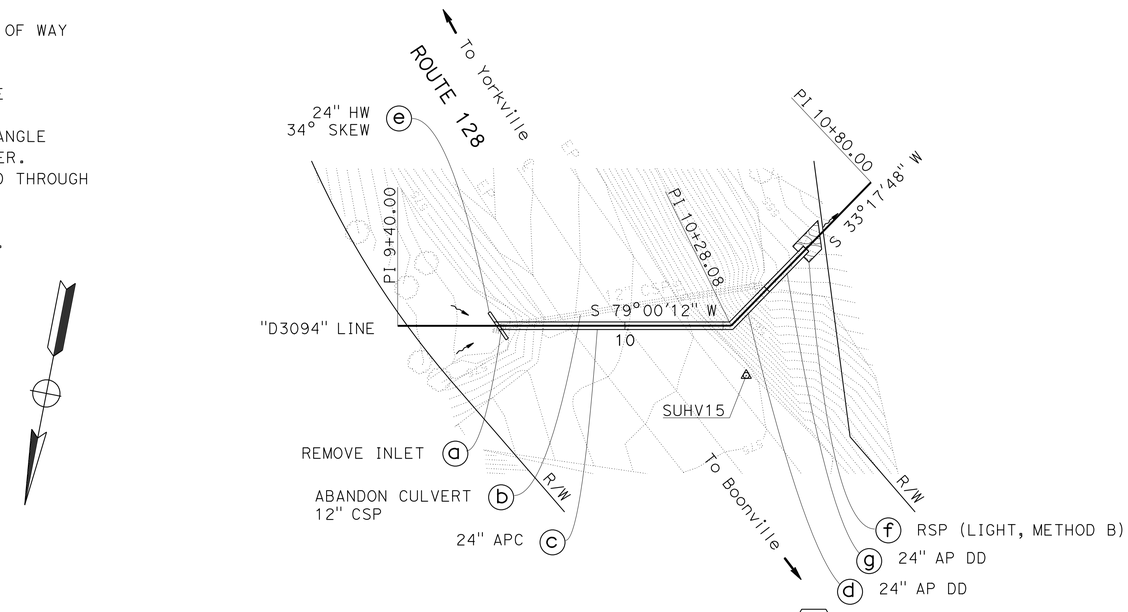

DRAINAGE SYSTEM 35
ROUTE 128
PM 30.94
SCALE: 1" = 20'

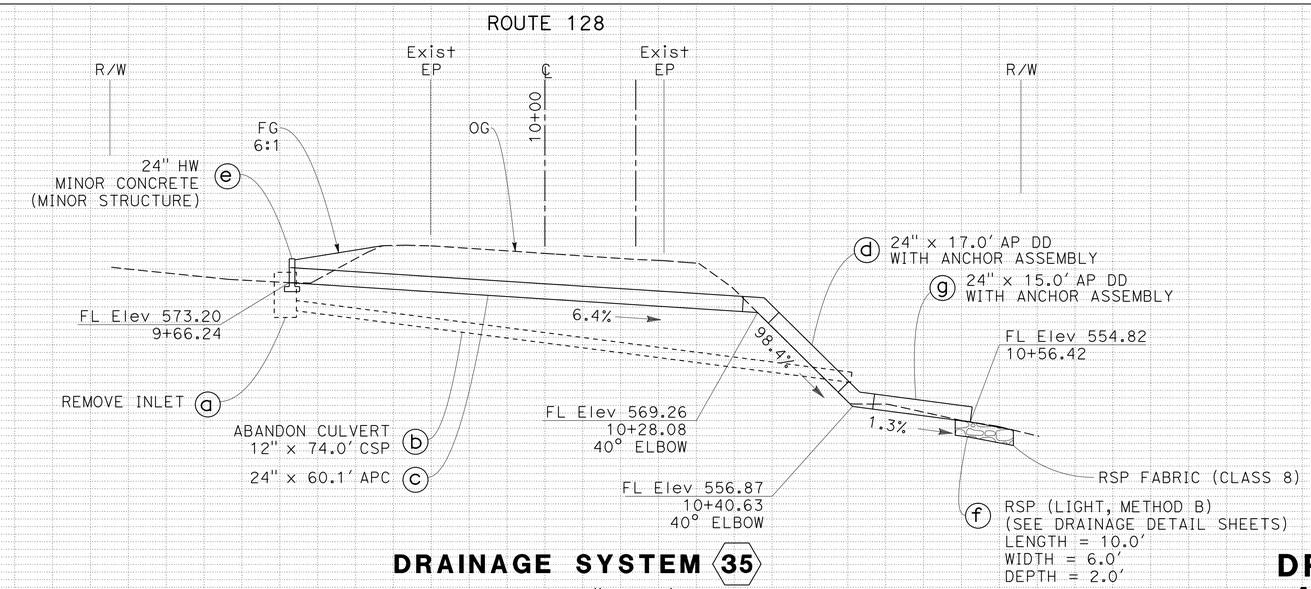

DRAINAGE SYSTEM 35
SCALE: Horiz 1" = 10'
Vert 1" = 10'

DRAINAGE PLAN AND PROFILES
SCALE AS SHOWN

D-34

Station	9+00	9+20	9+40	9+60	9+80	10+00	10+20	10+40	10+60	10+80	11+00
CY Exc											
CY Emb											

REVISED BY	DATE REVISED

CALCULATED-DESIGNED BY: LARISA V. SASEVICH
CHECKED BY: R SCOTT FOSTER
FUNCTIONAL SUPERVISOR: ROBERT E. POLGAR

STATE OF CALIFORNIA - DEPARTMENT OF TRANSPORTATION
Caltrans® DIVISION OF ENGINEERING

LAST REVISION 06-21-13
DATE PLOTTED => 07-AUG-2013
TIME PLOTTED => 14:57

Dist	COUNTY	ROUTE	POST MILES TOTAL PROJECT	SHEET No.	TOTAL SHEETS
01	Men	128	Var	40	106

Larisa V. Sasevich 6-24-13
REGISTERED CIVIL ENGINEER DATE

6-24-13
PLANS APPROVAL DATE

REGISTERED PROFESSIONAL ENGINEER LARISA V. SASEVICH No. C 71520 Exp. 12-31-13 CIVIL STATE OF CALIFORNIA

THE STATE OF CALIFORNIA OR ITS OFFICERS OR AGENTS SHALL NOT BE RESPONSIBLE FOR THE ACCURACY OR COMPLETENESS OF SCANNED COPIES OF THIS PLAN SHEET.

T13N R14W MDB&M
SECTION 13

NOTES:

1. FOR ACCURATE RIGHT OF WAY DATA, CONTACT RIGHT OF WAY ENGINEERING AT THE DISTRICT OFFICE.
2. THIS PLAN ACCURATE FOR DRAINAGE WORK ONLY.
3. FOR ROCK SLOPE PROTECTION DETAILS SEE DRAINAGE DETAIL SHEETS.
4. DURING CONSTRUCTION, PLACE TEMP CRASH CUSHION SAND FILLED (ARRAY 'TS 14') AT THE LOCATION WHERE THE SECTION OF MBGR WAS REMOVED.
5. AFTER CULVERT WORK IS COMPLETED REMOVE TEMP CRASH CUSION AND RECONSTRUCT MBGR.

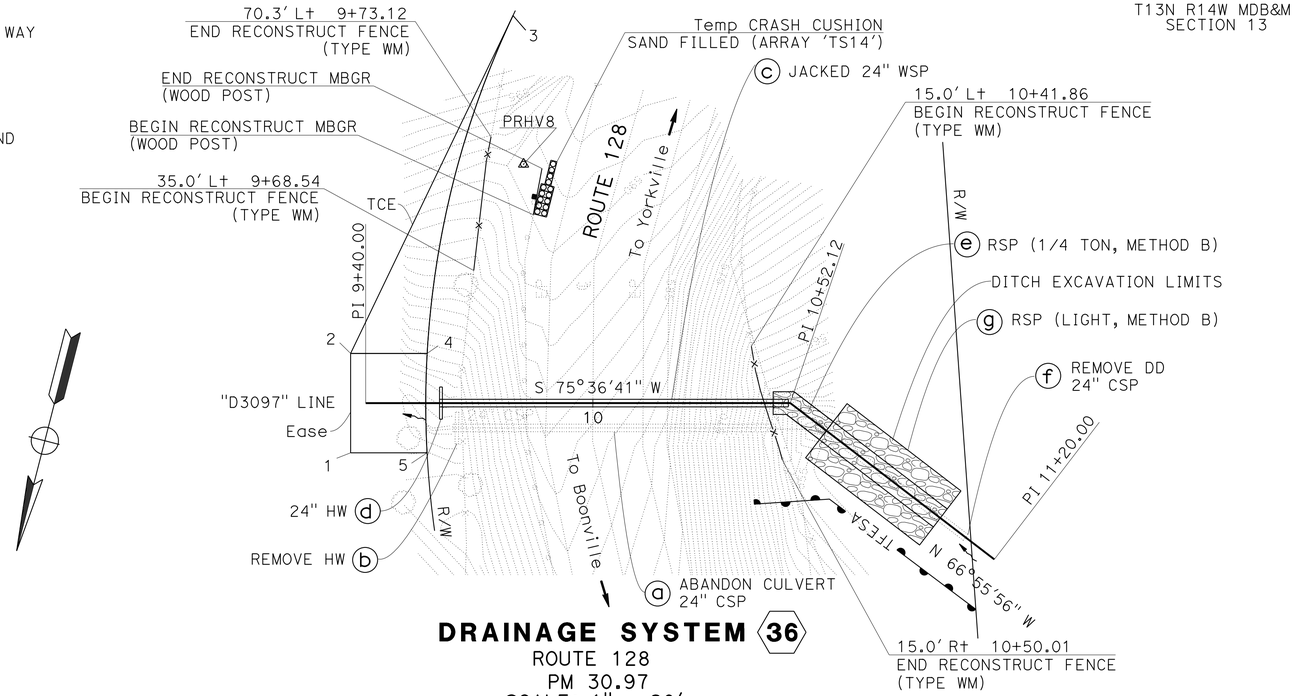

DRAINAGE SYSTEM 36
ROUTE 128
PM 30.97
SCALE: 1" = 20'

POINT	STATION	OFFSET
1	9+36.03	13.12' Rt
2	9+36.02	13.12' Lt
3	9+78.92	102.33' Lt
4	9+56.24	13.12' Lt
5	9+56.21	13.13' Rt

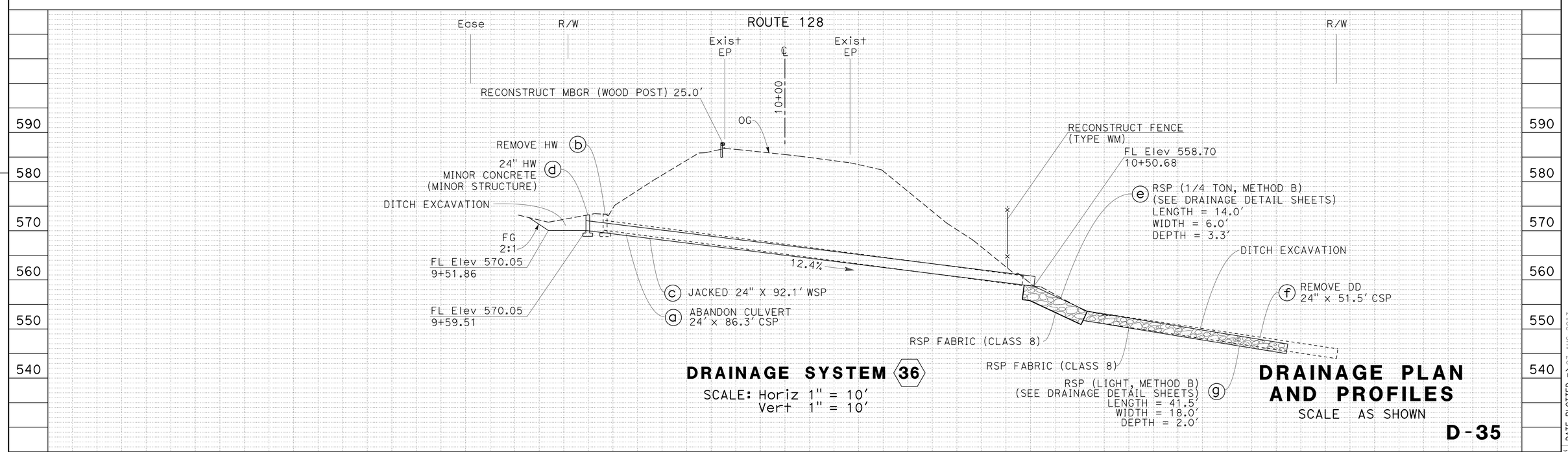

DRAINAGE SYSTEM 36
SCALE: Horiz 1" = 10'
Vert 1" = 10'

DRAINAGE PLAN AND PROFILES
SCALE AS SHOWN

D-35

STATE OF CALIFORNIA - DEPARTMENT OF TRANSPORTATION
Caltrans® DIVISION OF ENGINEERING

FUNCTIONAL SUPERVISOR: ROBERT E. POLGAR
CALCULATED-DESIGNED BY: LARISA V. SASEVICH
CHECKED BY: R SCOTT FOSTER
REVISED BY / DATE REVISED

LAST REVISION 06-21-13
DATE PLOTTED => 07-AUG-2013
TIME PLOTTED => 14:57

Dist	COUNTY	ROUTE	POST MILES TOTAL PROJECT	SHEET No.	TOTAL SHEETS
01	Men	128	Var	41	106

Larisa V. Sasevich 6-24-13
REGISTERED CIVIL ENGINEER DATE

6-24-13
PLANS APPROVAL DATE

REGISTERED PROFESSIONAL ENGINEER LARISA V. SASEVICH No. C 71520 Exp. 12-31-13 CIVIL STATE OF CALIFORNIA

THE STATE OF CALIFORNIA OR ITS OFFICERS OR AGENTS SHALL NOT BE RESPONSIBLE FOR THE ACCURACY OR COMPLETENESS OF SCANNED COPIES OF THIS PLAN SHEET.

T13N R13W MDB&M
SECTION 19

NOTES:

1. FOR ACCURATE RIGHT OF WAY DATA, CONTACT RIGHT OF WAY ENGINEERING AT THE DISTRICT OFFICE.
2. THIS PLAN ACCURATE FOR DRAINAGE WORK ONLY.
3. FOR CONCRETE BACKFILL (PIPE TRENCH) DETAILS SEE DRAINAGE DETAIL SHEETS.
4. INLET AND OUTLET STRUCTURE SKEW ANGLE IS MEASURED FROM A LINE PERPENDICULAR TO THE CULVERT ALIGNMENT.

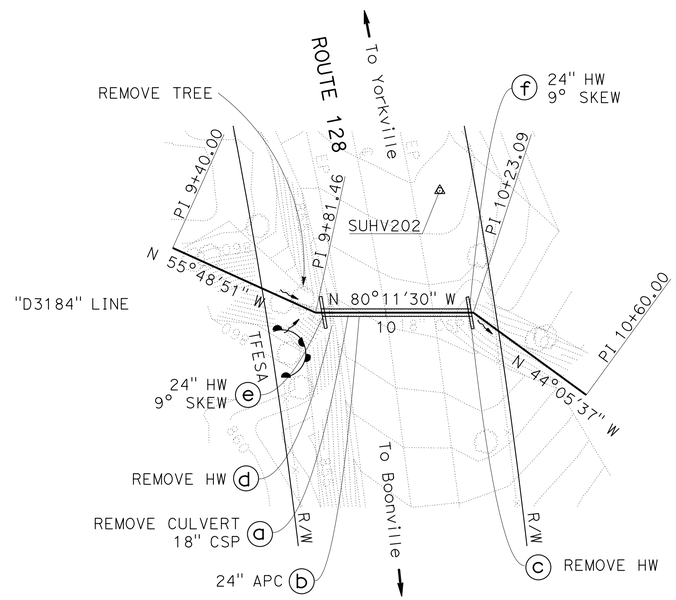

DRAINAGE SYSTEM 37
ROUTE 128
PM 31.84
SCALE: 1" = 20'

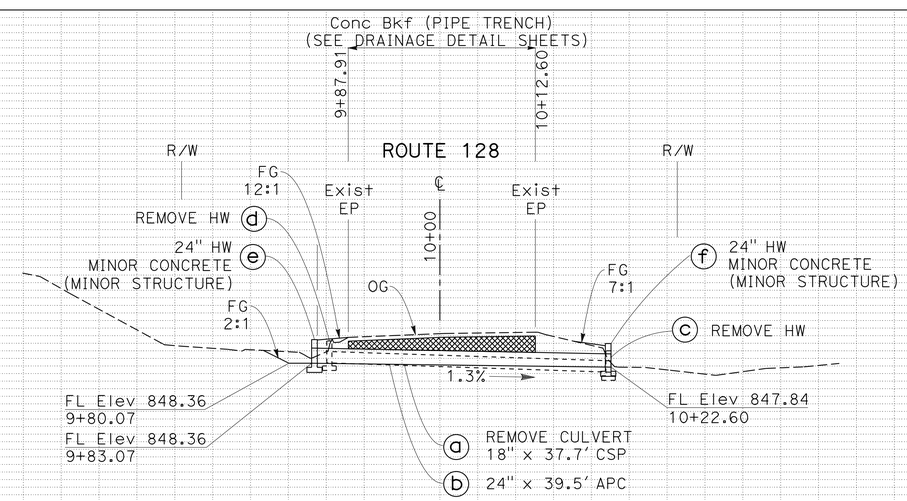

DRAINAGE SYSTEM 37
SCALE: Horiz 1" = 10'
Vert 1" = 10'

DRAINAGE PLAN AND PROFILES
SCALE AS SHOWN

D-36

Station 9+00 9+20 9+40 9+60 9+80 10+00 10+20 10+40 10+60 10+80 11+00

CY Exc
Emb

STATE OF CALIFORNIA - DEPARTMENT OF TRANSPORTATION
Caltrans® DIVISION OF ENGINEERING

FUNCTIONAL SUPERVISOR: ROBERT E. POLGAR
CALCULATED-DESIGNED BY: LARISA V. SASEVICH
CHECKED BY: R SCOTT FOSTER
REVISED BY / DATE REVISED

LAST REVISION 06-21-13
DATE PLOTTED => 07-AUG-2013
TIME PLOTTED => 14:57

Dist	COUNTY	ROUTE	POST MILES TOTAL PROJECT	SHEET No.	TOTAL SHEETS
01	Men	128	Var	42	106

Larisa V. Sasevich 6-24-13
REGISTERED CIVIL ENGINEER DATE

6-24-13
PLANS APPROVAL DATE

REGISTERED PROFESSIONAL ENGINEER LARISA V. SASEVICH No. C 71520 Exp. 12-31-13 CIVIL STATE OF CALIFORNIA

THE STATE OF CALIFORNIA OR ITS OFFICERS OR AGENTS SHALL NOT BE RESPONSIBLE FOR THE ACCURACY OR COMPLETENESS OF SCANNED COPIES OF THIS PLAN SHEET.

T13N R13W MDB&M
SECTION 19

NOTES:

1. FOR ACCURATE RIGHT OF WAY DATA, CONTACT RIGHT OF WAY ENGINEERING AT THE DISTRICT OFFICE.
2. THIS PLAN ACCURATE FOR DRAINAGE WORK ONLY.
3. INLET STRUCTURE SKEW ANGLE IS MEASURED FROM A LINE PERPENDICULAR TO THE CULVERT ALIGNMENT.

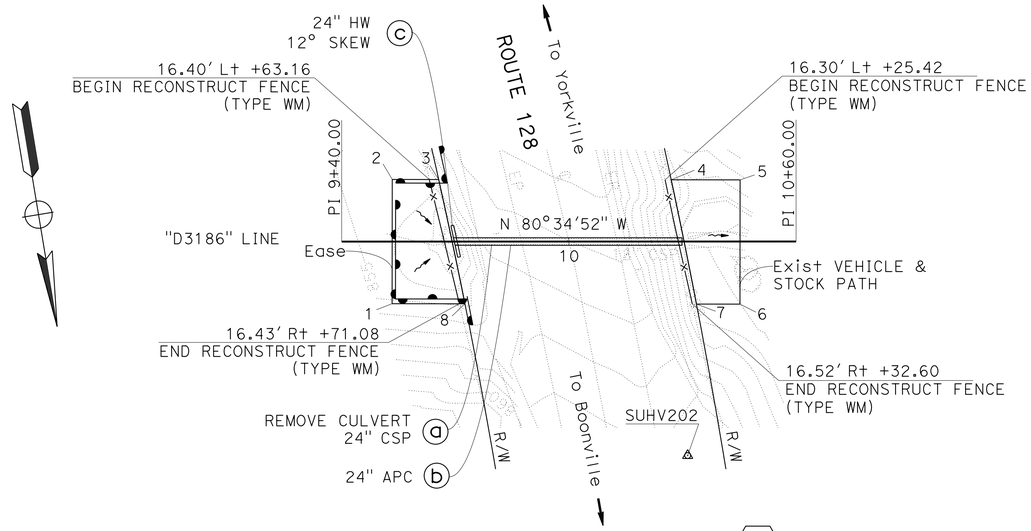

POINT	STATION	OFFSET
1	9+53.31	16.40' Rt
2	9+53.36	16.40' Lt
3	9+65.62	16.39' Lt
4	9+27.03	16.30' Lt
5	9+45.22	16.27' Lt
6	9+45.18	16.53' Rt
7	9+33.69	16.52' Rt
8	9+72.55	16.43' Rt

DRAINAGE SYSTEM 38
ROUTE 128
PM 31.86
SCALE: 1" = 20'

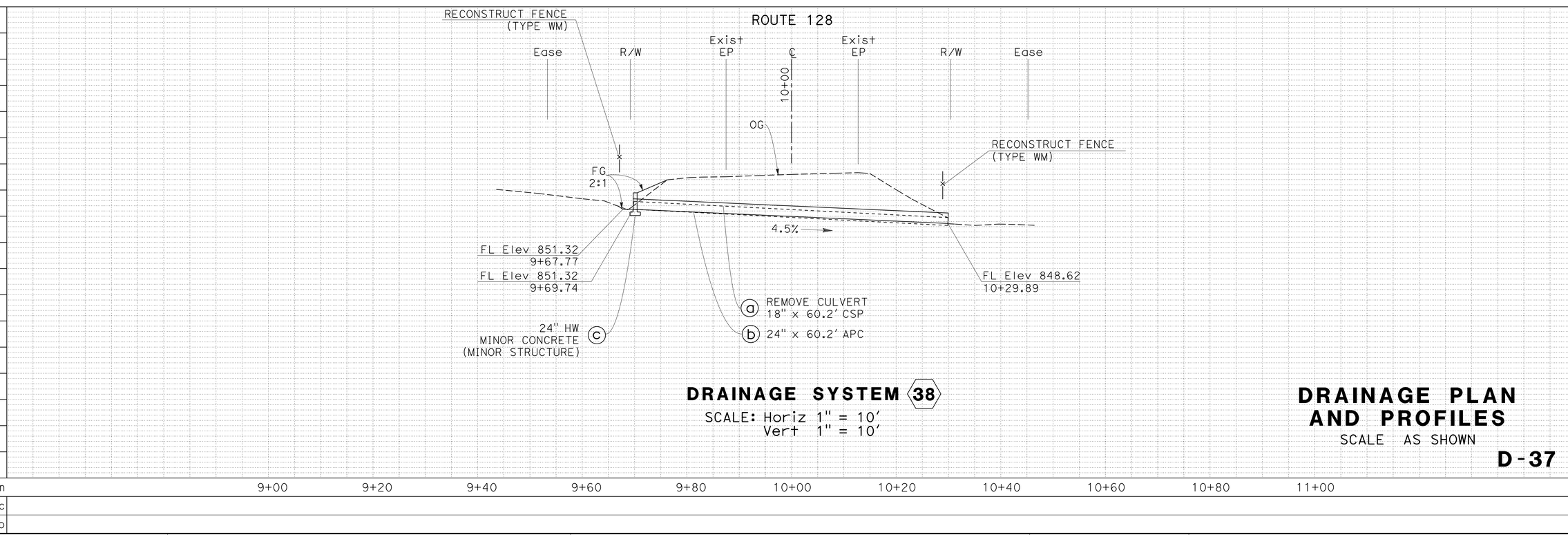

DRAINAGE SYSTEM 38
SCALE: Horiz 1" = 10'
Vert 1" = 10'

DRAINAGE PLAN AND PROFILES
SCALE AS SHOWN

D-37

REVISED BY | DATE REVISED
LARISA V. SASEVICH | TIMOTHY TRINH
CALCULATED-DESIGNED BY | CHECKED BY
FUNCTIONAL SUPERVISOR
ROBERT E. POLGAR
STATE OF CALIFORNIA - DEPARTMENT OF TRANSPORTATION
Caltrans® DIVISION OF ENGINEERING

LAST REVISION 03-30-11
DATE PLOTTED => 07-AUG-2013
TIME PLOTTED => 14:57

Dist	COUNTY	ROUTE	POST MILES TOTAL PROJECT	SHEET No.	TOTAL SHEETS
01	Men	128	Var	43	106

REGISTERED CIVIL ENGINEER 6-24-13 DATE

6-24-13
PLANS APPROVAL DATE

REGISTERED PROFESSIONAL ENGINEER LARISA V. SASEVICH No. C 71520 Exp. 12-31-13 CIVIL STATE OF CALIFORNIA

THE STATE OF CALIFORNIA OR ITS OFFICERS OR AGENTS SHALL NOT BE RESPONSIBLE FOR THE ACCURACY OR COMPLETENESS OF SCANNED COPIES OF THIS PLAN SHEET.

T13N R13W MDB&M
SECTION 19

NOTES:

1. FOR ACCURATE RIGHT OF WAY DATA, CONTACT RIGHT OF WAY ENGINEERING AT THE DISTRICT OFFICE.
2. THIS PLAN ACCURATE FOR DRAINAGE WORK ONLY.
3. FOR ROCK SLOPE PROTECTION DETAILS SEE DRAINAGE DETAIL SHEETS.
4. INLET STRUCTURE SKEW ANGLE IS MEASURED FROM A LINE PERPENDICULAR TO THE CULVERT ALIGNMENT.

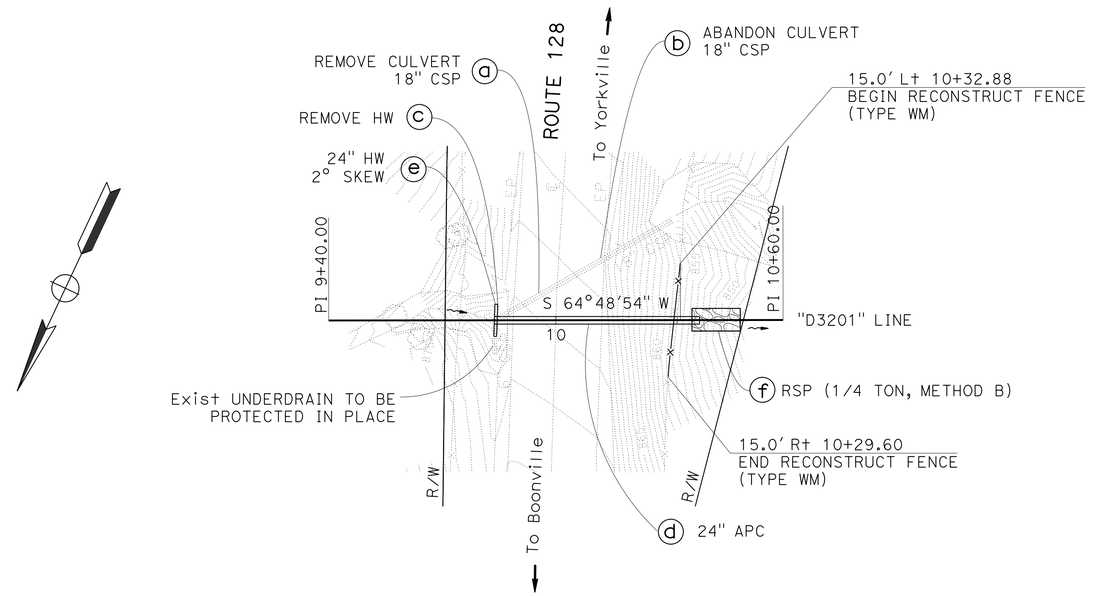

DRAINAGE SYSTEM 39
ROUTE 128
PM 32.01
SCALE: 1" = 20'

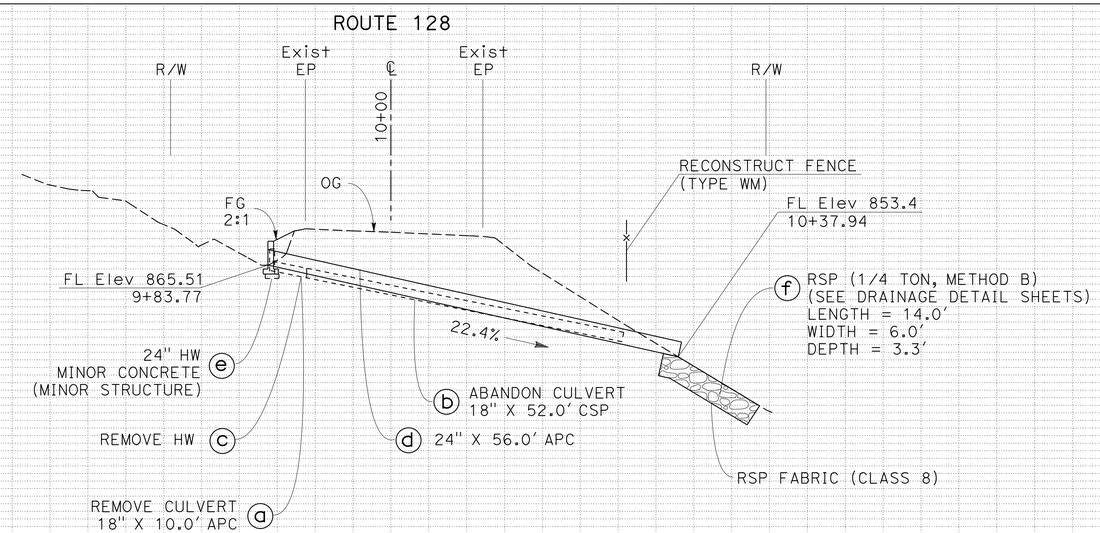

DRAINAGE SYSTEM 39
SCALE: Horiz 1" = 10'
Vert 1" = 10'

DRAINAGE PLAN AND PROFILES
SCALE AS SHOWN

D-38

Station	9+00	9+20	9+40	9+60	9+80	10+00	10+20	10+40	10+60	10+80	11+00
CY Exc											
CY Emb											

STATE OF CALIFORNIA - DEPARTMENT OF TRANSPORTATION
Caltrans® DIVISION OF ENGINEERING

FUNCTIONAL SUPERVISOR: ROBERT E. POLGAR
CALCULATED-DESIGNED BY: LARISA V. SASEVICH
CHECKED BY: R SCOTT FOSTER
REVISED BY / DATE REVISED

LAST REVISION 03-21-13
DATE PLOTTED => 07-AUG-2013
TIME PLOTTED => 14:57

Dist	COUNTY	ROUTE	POST MILES TOTAL PROJECT	SHEET No.	TOTAL SHEETS
01	Men	128	Var	44	106

Robert E. Polgar 6-24-13
REGISTERED CIVIL ENGINEER DATE

6-24-13
PLANS APPROVAL DATE

REGISTERED PROFESSIONAL ENGINEER ROBERT E POLGAR No. C 51768 Exp. 6-30-14 CIVIL STATE OF CALIFORNIA

THE STATE OF CALIFORNIA OR ITS OFFICERS OR AGENTS SHALL NOT BE RESPONSIBLE FOR THE ACCURACY OR COMPLETENESS OF SCANNED COPIES OF THIS PLAN SHEET.

NOTES:

1. FOR ACCURATE RIGHT OF WAY DATA, CONTACT RIGHT OF WAY ENGINEERING AT THE DISTRICT OFFICE.
2. THIS PLAN ACCURATE FOR DRAINAGE WORK ONLY.
3. FOR ROCK SLOPE PROTECTION DETAILS SEE DRAINAGE DETAIL SHEETS.
4. THE ANGLE OF ELBOW IS APPROXIMATE. THE EXACT ANGLE WILL BE DETERMINED IN THE FIELD BY THE ENGINEER.
5. FOR CONCRETE BACKFILL (PIPE TRENCH) (DETAILS SEE DRAINAGE DETAILS SHEET.)
6. PIPE STAKES FOR ANCHOR ASSEMBLY TO BE INSERTED THROUGH BRACKET WELDED TO DOWNDRAIN.

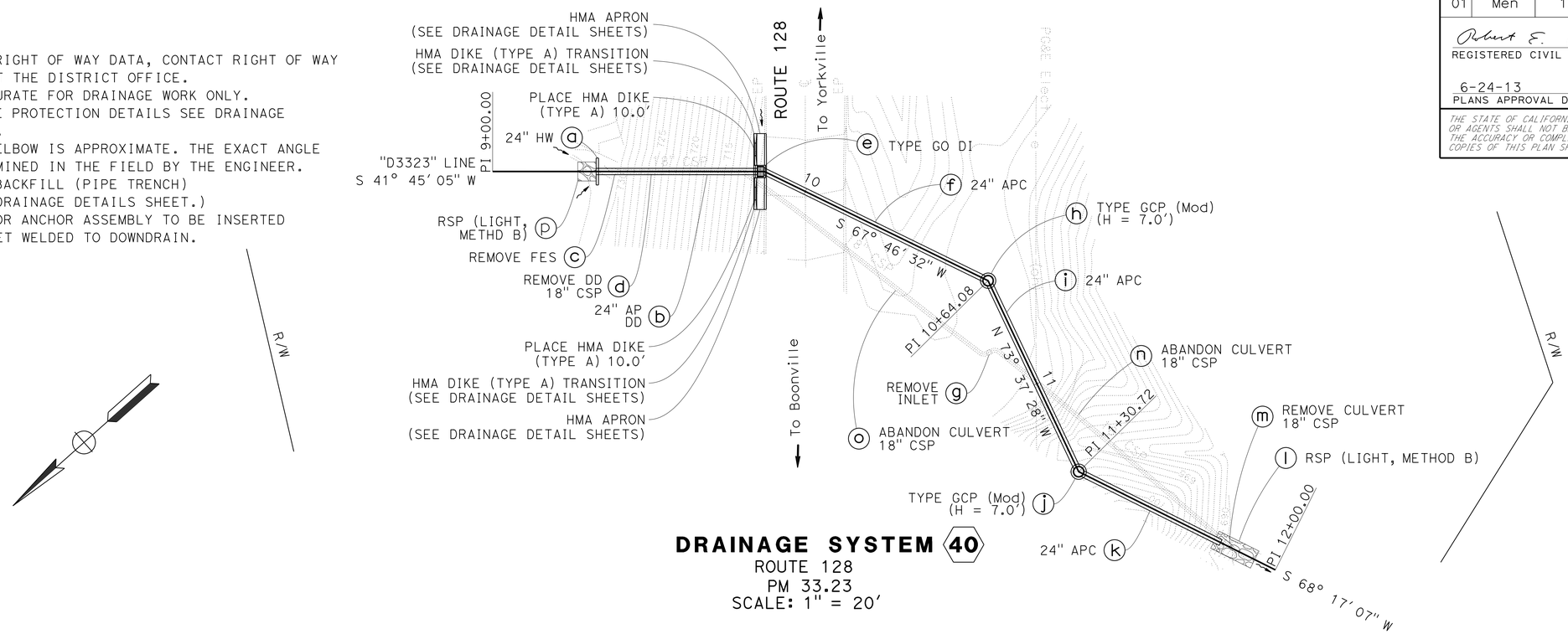

DRAINAGE SYSTEM 40
ROUTE 128
PM 33.23
SCALE: 1" = 20'

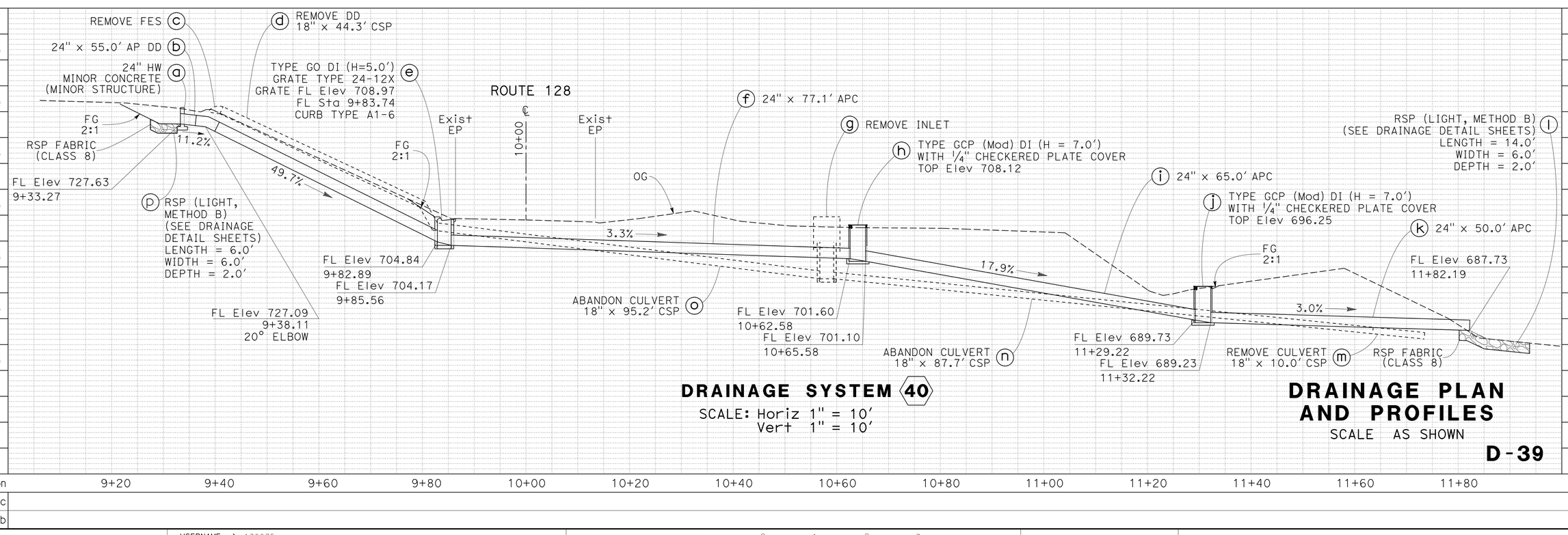

DRAINAGE SYSTEM 40
SCALE: Horiz 1" = 10'
Vert 1" = 10'

DRAINAGE PLAN AND PROFILES
SCALE AS SHOWN

D-39

STATE OF CALIFORNIA - DEPARTMENT OF TRANSPORTATION
Caltrans
DIVISION OF ENGINEERING

FUNCTIONAL SUPERVISOR: ROBERT E. POLGAR
CALCULATED-DESIGNED BY: R SCOTT FOSTER
CHECKED BY: LARISA V. SASEVICH
REVISED BY / DATE REVISED

LAST REVISION 06-21-13
DATE PLOTTED => 07-AUG-2013
TIME PLOTTED => 14:57

Dist	COUNTY	ROUTE	POST MILES TOTAL PROJECT	SHEET No.	TOTAL SHEETS
01	Men	128	Var	45	106

Larisa V. Sasevich 6-24-13
REGISTERED CIVIL ENGINEER DATE

6-24-13
PLANS APPROVAL DATE

REGISTERED PROFESSIONAL ENGINEER LARISA V. SASEVICH No. C 71520 Exp. 12-31-13 CIVIL STATE OF CALIFORNIA

THE STATE OF CALIFORNIA OR ITS OFFICERS OR AGENTS SHALL NOT BE RESPONSIBLE FOR THE ACCURACY OR COMPLETENESS OF SCANNED COPIES OF THIS PLAN SHEET.

NOTES:

1. FOR ACCURATE RIGHT OF WAY DATA, CONTACT RIGHT OF WAY ENGINEERING AT THE DISTRICT OFFICE.
2. THIS PLAN ACCURATE FOR DRAINAGE WORK ONLY.
3. FOR ROCK SLOPE PROTECTION DETAILS SEE DRAINAGE DETAIL SHEETS.
4. THE ANGLE OF ELBOW IS APPROXIMATE. THE EXACT ANGLE WILL BE DETERMINED IN THE FIELD BY THE ENGINEER.
5. PIPE STAKES FOR ANCHOR ASSEMBLY TO BE INSERTED THROUGH BRACKET WELDED TO DOWNDRAIN.
6. INLET STRUCTURE SKEW ANGLE IS MEASURED FROM A LINE PERPENDICULAR TO THE CULVERT ALIGNMENT.

T13N R13W MDB&M
SECTION 30

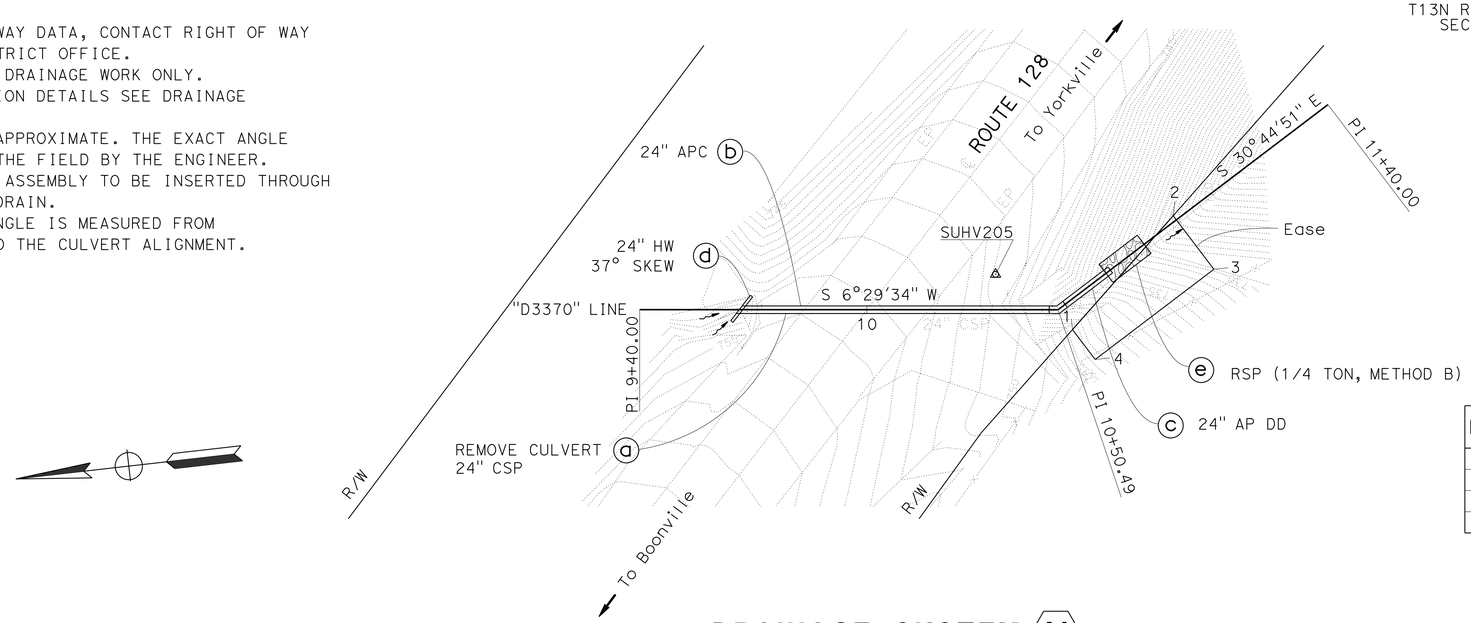

POINT	STATION	OFFSET
1	10+52.42	6.48' R+
2	10+87.22	1.37' L+
3	10+92.89	16.39' R+
4	10+55.58	16.39' R+

DRAINAGE SYSTEM (41)
ROUTE 128
PM 33.70
SCALE: 1" = 20'

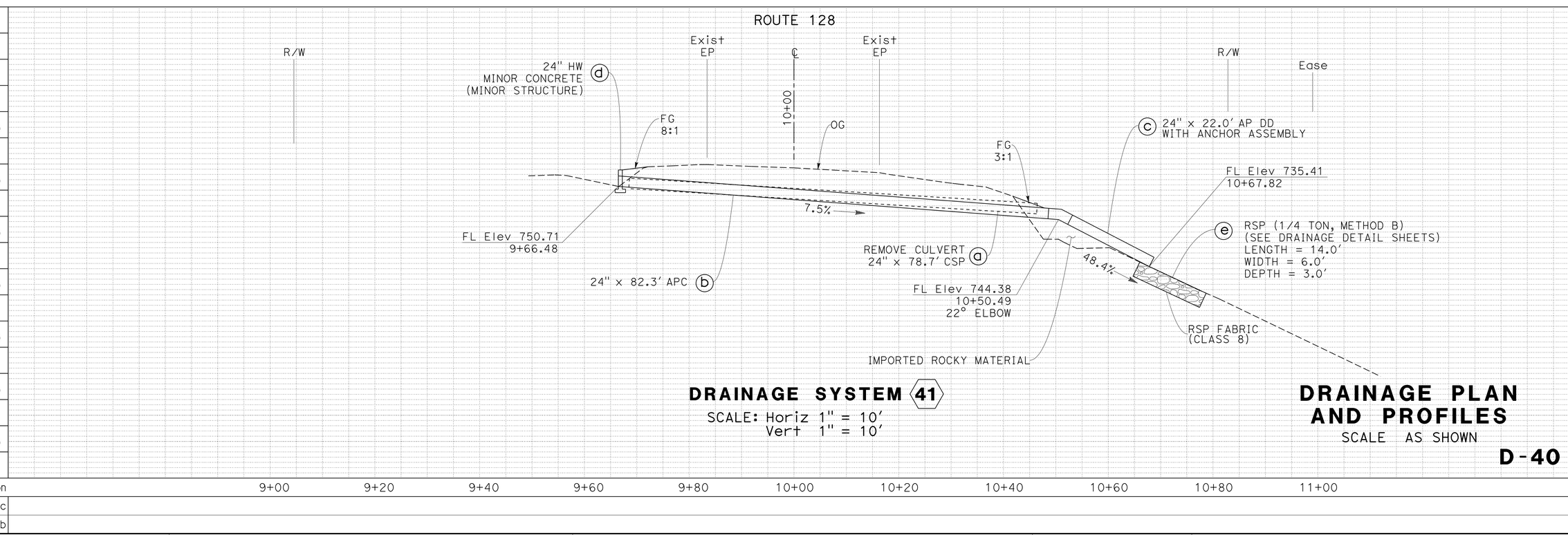

DRAINAGE SYSTEM (41)
SCALE: Horiz 1" = 10'
Vert 1" = 10'

DRAINAGE PLAN AND PROFILES
SCALE AS SHOWN

D-40

REVISED BY | DATE REVISED
LARISA V. SASEVICH | TIMOTHY TRINH
CALCULATED-DESIGNED BY | CHECKED BY
FUNCTIONAL SUPERVISOR: ROBERT E. POLGAR

STATE OF CALIFORNIA - DEPARTMENT OF TRANSPORTATION
Caltrans® DIVISION OF ENGINEERING

LAST REVISION 03-30-11
DATE PLOTTED => 07-AUG-2013
TIME PLOTTED => 14:57

Dist	COUNTY	ROUTE	POST MILES TOTAL PROJECT	SHEET No.	TOTAL SHEETS
01	Men	128	Var	46	106

Larisa V. Sasevich 6-24-13
REGISTERED CIVIL ENGINEER DATE

6-24-13
PLANS APPROVAL DATE

REGISTERED PROFESSIONAL ENGINEER LARISA V. SASEVICH No. C 71520 Exp. 12-31-13 CIVIL STATE OF CALIFORNIA

THE STATE OF CALIFORNIA OR ITS OFFICERS OR AGENTS SHALL NOT BE RESPONSIBLE FOR THE ACCURACY OR COMPLETENESS OF SCANNED COPIES OF THIS PLAN SHEET.

T13N R13W MDB&M
SECTION 29

NOTES:

1. FOR ACCURATE RIGHT OF WAY DATA, CONTACT RIGHT OF WAY ENGINEERING AT THE DISTRICT OFFICE.
2. THIS PLAN ACCURATE FOR DRAINAGE WORK ONLY.
3. FOR ROCK SLOPE PROTECTION DETAILS SEE DRAINAGE DETAIL SHEETS.
4. INLET STRUCTURE SKEW ANGLE IS MEASURED FROM A LINE PERPENDICULAR TO THE CULVERT ALIGNMENT.

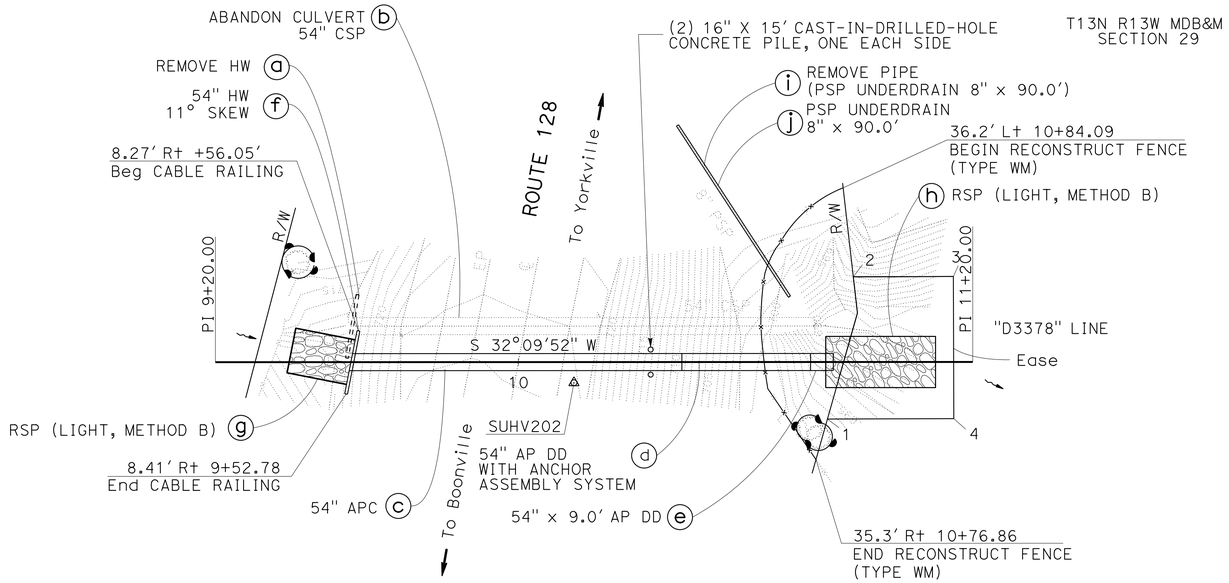

POINT	STATION	OFFSET
1	10+81.62	15.06' Rt
2	10+86.73	13.00' Lt
3	11+13.15	13.07' Lt
4	11+14.99	14.96' Rt

DRAINAGE SYSTEM 42

ROUTE 128
PM 33.78
SCALE: 1" = 20'

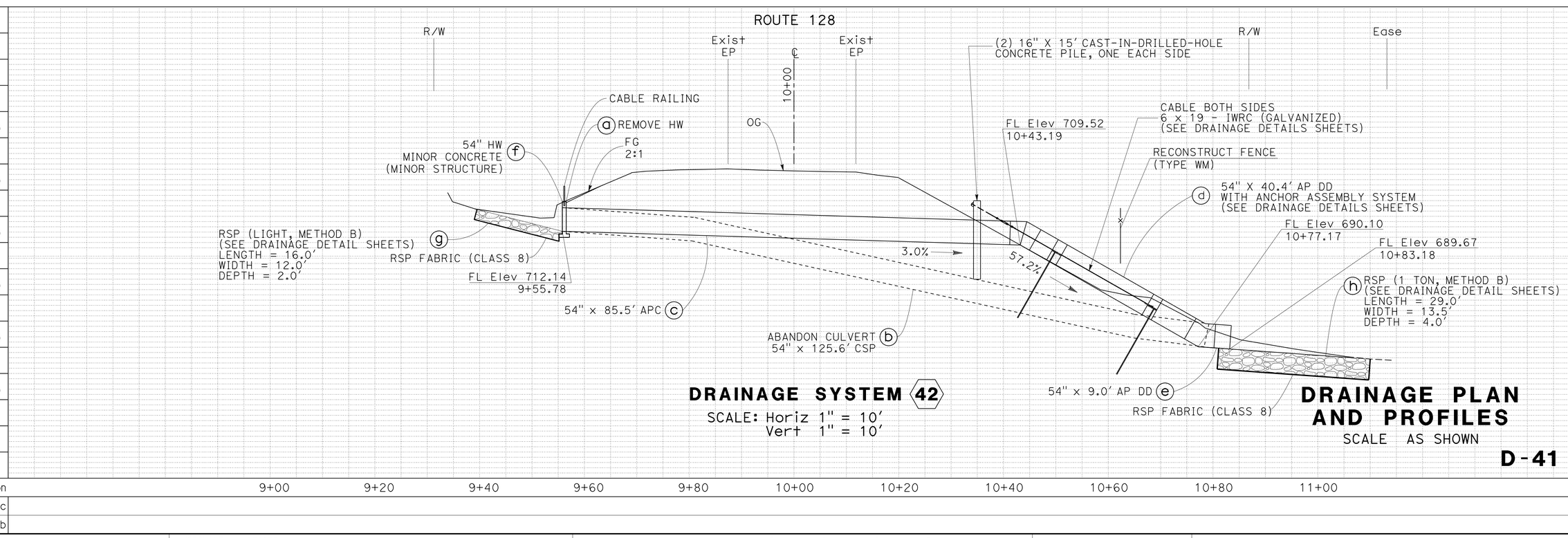

DRAINAGE SYSTEM 42

SCALE: Horiz 1" = 10'
Vert 1" = 10'

DRAINAGE PLAN AND PROFILES

SCALE AS SHOWN

D-41

REVISED BY | DATE REVISED
LARISA V. SASEVICH | TIMOTHY TRINH
CALCULATED-DESIGNED BY | CHECKED BY
FUNCTIONAL SUPERVISOR | ROBERT E. POLGAR

STATE OF CALIFORNIA - DEPARTMENT OF TRANSPORTATION
Caltrans® DIVISION OF ENGINEERING

LAST REVISION 03-30-11
DATE PLOTTED => 07-AUG-2013
TIME PLOTTED => 14:57

Dist	COUNTY	ROUTE	POST MILES TOTAL PROJECT	SHEET No.	TOTAL SHEETS
01	Men	128	Var	47	106

Larisa V. Sasevich 6-24-13
REGISTERED CIVIL ENGINEER DATE

6-24-13
PLANS APPROVAL DATE

REGISTERED PROFESSIONAL ENGINEER LARISA V. SASEVICH No. C 71520 Exp. 12-31-13 CIVIL STATE OF CALIFORNIA

THE STATE OF CALIFORNIA OR ITS OFFICERS OR AGENTS SHALL NOT BE RESPONSIBLE FOR THE ACCURACY OR COMPLETENESS OF SCANNED COPIES OF THIS PLAN SHEET.

NOTES:

1. FOR ACCURATE RIGHT OF WAY DATA, CONTACT RIGHT OF WAY ENGINEERING AT THE DISTRICT OFFICE.
2. THIS PLAN ACCURATE FOR DRAINAGE WORK ONLY.
3. FOR CONCRETE BACKFILL (PIPE TRENCH) DETAILS SEE DRAINAGE DETAIL SHEETS.)

T12N R13W MDB&M
SECTION 3

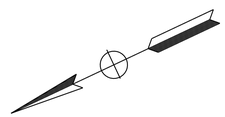

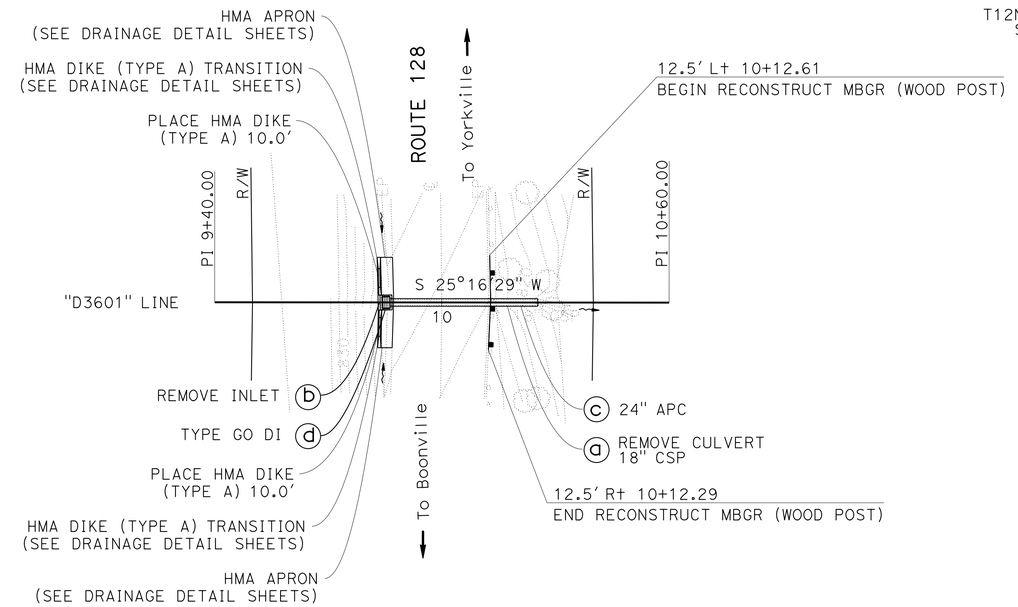

DRAINAGE SYSTEM 43

ROUTE 128
PM 36.01
SCALE: 1" = 20'

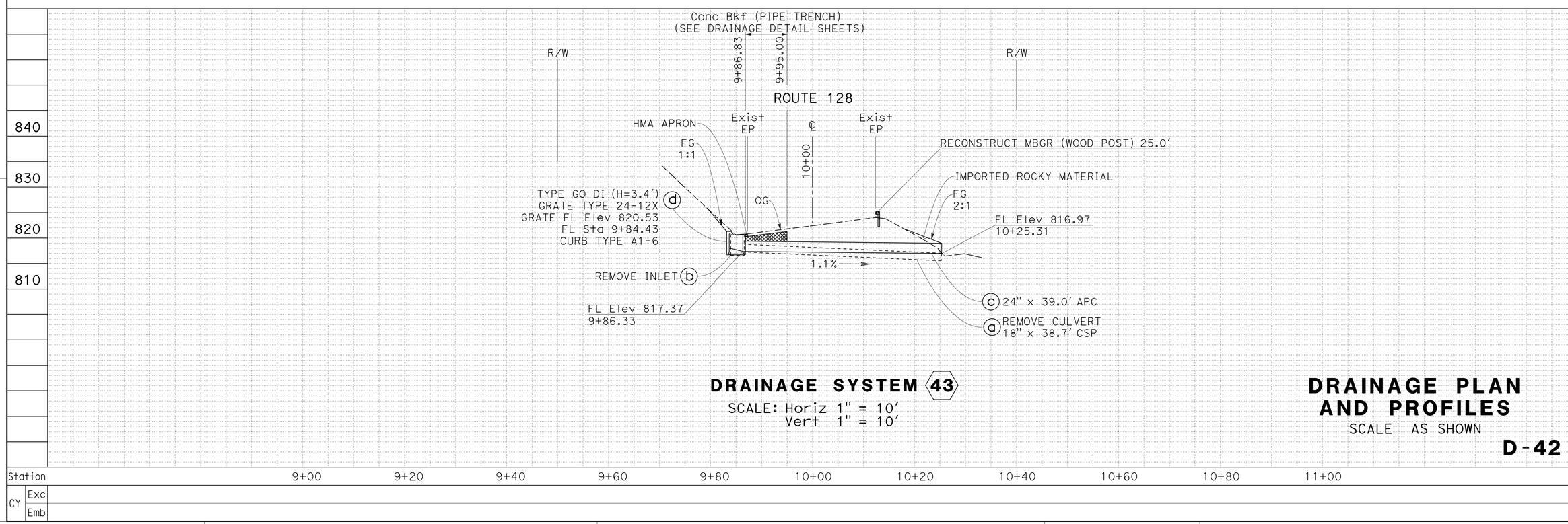

DRAINAGE SYSTEM 43

SCALE: Horiz 1" = 10'
Vert 1" = 10'

DRAINAGE PLAN AND PROFILES

SCALE AS SHOWN

D-42

REVISED BY | DATE REVISED
LARISA V. SASEVICH | TIMOTHY TRINH
CALCULATED-DESIGNED BY | CHECKED BY
FUNCTIONAL SUPERVISOR | ROBERT E. POLGAR
STATE OF CALIFORNIA - DEPARTMENT OF TRANSPORTATION
Caltrans® DIVISION OF ENGINEERING

LAST REVISION 03-30-11
DATE PLOTTED => 07-AUG-2013
TIME PLOTTED => 14:57

Dist	COUNTY	ROUTE	POST MILES TOTAL PROJECT	SHEET No.	TOTAL SHEETS
01	Men	128	Var	48	106

Robert E. Polgar 6-24-13
REGISTERED CIVIL ENGINEER DATE

6-24-13
PLANS APPROVAL DATE

REGISTERED PROFESSIONAL ENGINEER ROBERT E. POLGAR No. C 51768 Exp. 6-30-14 CIVIL STATE OF CALIFORNIA

THE STATE OF CALIFORNIA OR ITS OFFICERS OR AGENTS SHALL NOT BE RESPONSIBLE FOR THE ACCURACY OR COMPLETENESS OF SCANNED COPIES OF THIS PLAN SHEET.

T12N R13W MDB&M
SECTION 3

NOTES:

1. FOR ACCURATE RIGHT OF WAY DATA, CONTACT RIGHT OF WAY ENGINEERING AT THE DISTRICT OFFICE.
2. THIS PLAN ACCURATE FOR DRAINAGE WORK ONLY.
3. FOR ROCK SLOPE PROTECTION DETAILS SEE DRAINAGE DETAIL SHEETS.

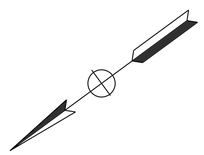

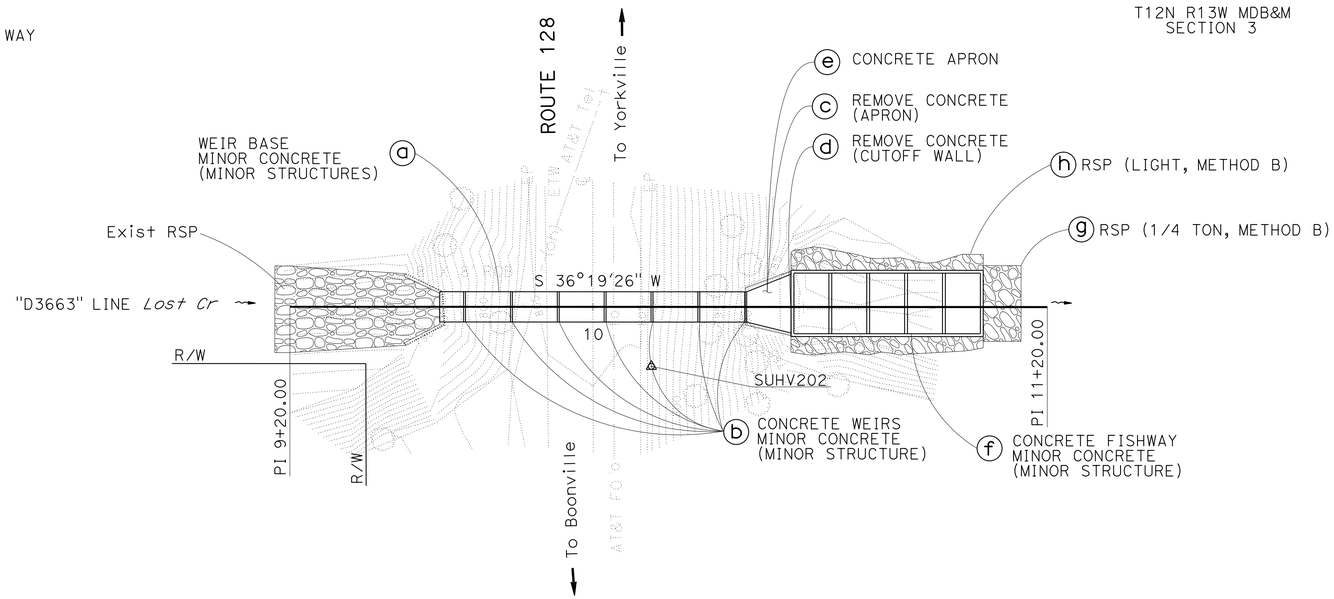

DRAINAGE SYSTEM 44
ROUTE 128
PM 36.63
SCALE: 1" = 20'

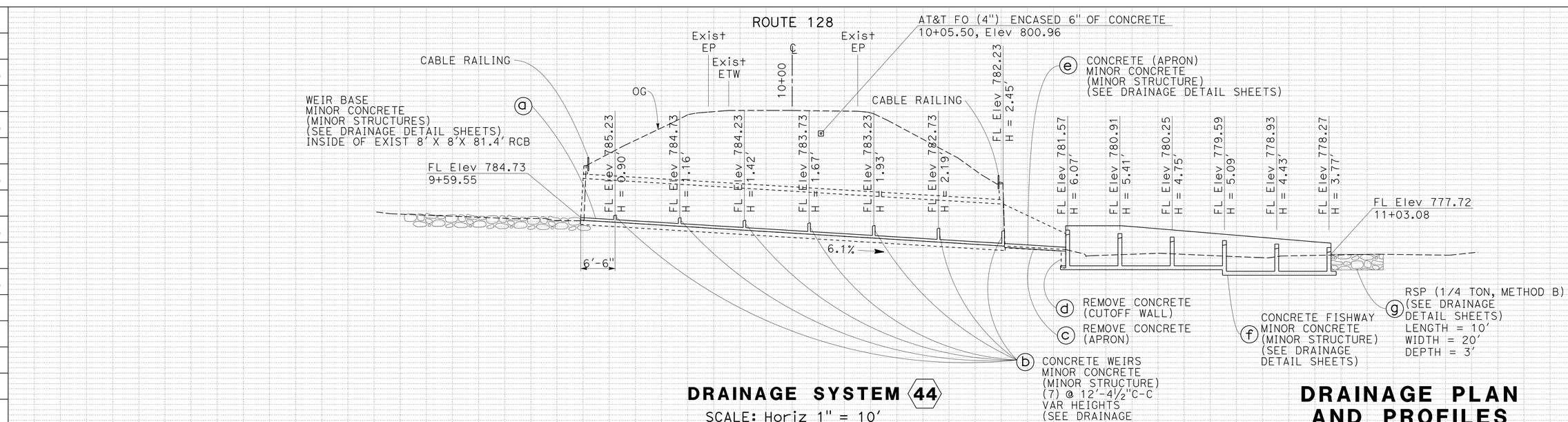

DRAINAGE SYSTEM 44
SCALE: Horiz 1" = 10'
Vert 1" = 10'

DRAINAGE PLAN AND PROFILES
SCALE AS SHOWN

D-43

REVISED BY | DATE REVISED
ROBERT E. POLGAR | TIMOTHY TRINH
CALCULATED-DESIGNED BY | CHECKED BY
FUNCTIONAL SUPERVISOR | ROBERT E. POLGAR

STATE OF CALIFORNIA - DEPARTMENT OF TRANSPORTATION
Caltrans® DIVISION OF ENGINEERING

LAST REVISION 03-30-11
DATE PLOTTED => 07-AUG-2013
TIME PLOTTED => 14:57

Dist	COUNTY	ROUTE	POST MILES TOTAL PROJECT	SHEET No.	TOTAL SHEETS
01	Men	128	Var	49	106

Larisa V. Sasevich 6-24-13
REGISTERED CIVIL ENGINEER DATE

6-24-13
PLANS APPROVAL DATE

REGISTERED PROFESSIONAL ENGINEER LARISA V. SASEVICH No. C 71520 Exp. 12-31-13 CIVIL STATE OF CALIFORNIA

THE STATE OF CALIFORNIA OR ITS OFFICERS OR AGENTS SHALL NOT BE RESPONSIBLE FOR THE ACCURACY OR COMPLETENESS OF SCANNED COPIES OF THIS PLAN SHEET.

T12N R13W MDB&M
SECTION 1

NOTES:

1. FOR ACCURATE RIGHT OF WAY DATA, CONTACT RIGHT OF WAY ENGINEERING AT THE DISTRICT OFFICE.
2. THIS PLAN ACCURATE FOR DRAINAGE WORK ONLY.
3. FOR ROCK SLOPE PROTECTION DETAILS SEE DRAINAGE DETAIL SHEETS.
4. INLET STRUCTURE SKEW ANGLE IS MEASURED FROM A LINE PERPENDICULAR TO THE CULVERT ALIGNMENT.

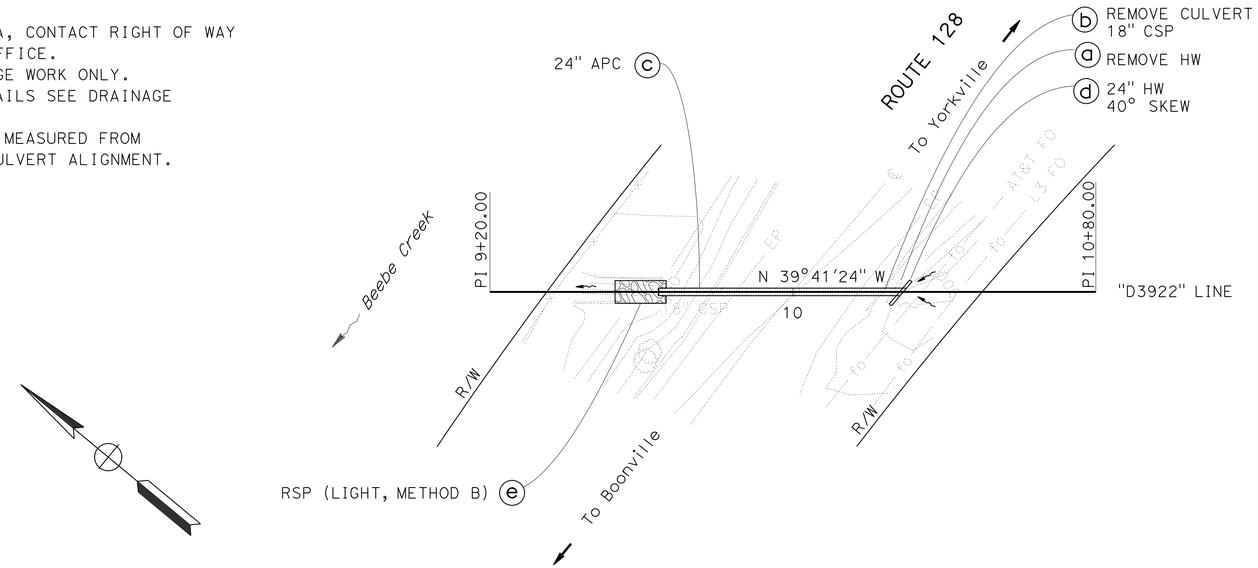

DRAINAGE SYSTEM 46
ROUTE 128
PM 39.22
SCALE: 1" = 20'

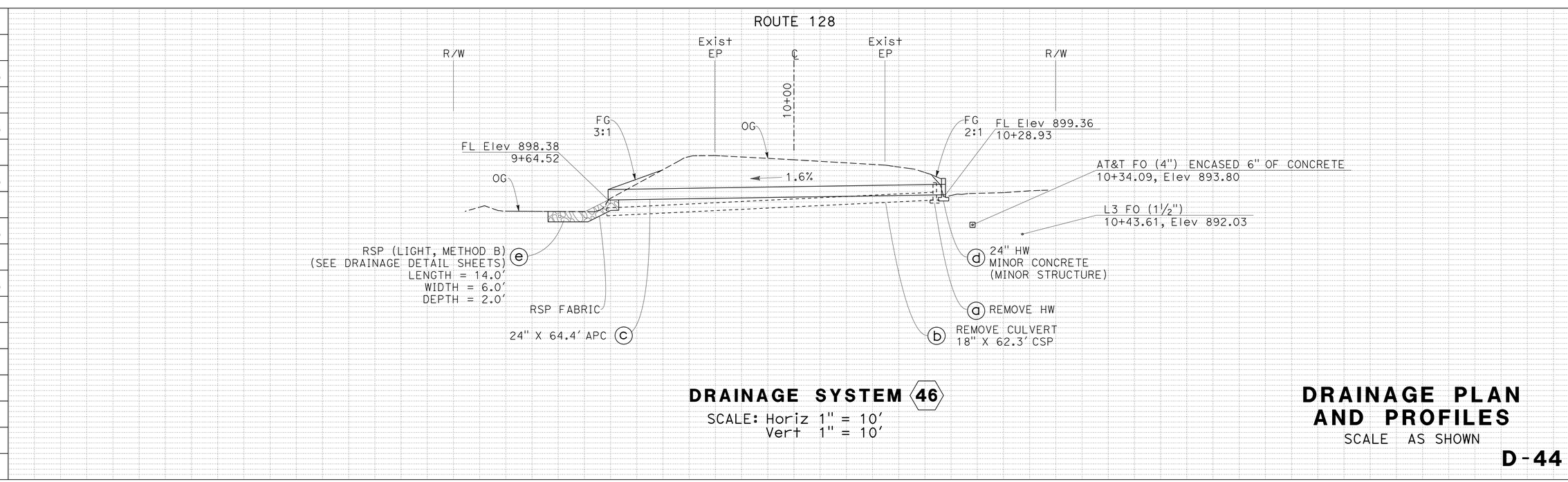

DRAINAGE SYSTEM 46
SCALE: Horiz 1" = 10'
Vert 1" = 10'

DRAINAGE PLAN AND PROFILES
SCALE AS SHOWN

D-44

Station	9+00	9+20	9+40	9+60	9+80	10+00	10+20	10+40	10+60	10+80	11+00
CY Exc											
CY Emb											

STATE OF CALIFORNIA - DEPARTMENT OF TRANSPORTATION
Caltrans® DIVISION OF ENGINEERING

FUNCTIONAL SUPERVISOR: ROBERT E. POLGAR
CALCULATED-DESIGNED BY: LARISA V. SASEVICH
CHECKED BY: R SCOTT FOSTER
REVISED BY
DATE REVISED

LAST REVISION 06-21-13
DATE PLOTTED => 07-AUG-2013
TIME PLOTTED => 14:58

Dist	COUNTY	ROUTE	POST MILES TOTAL PROJECT	SHEET No.	TOTAL SHEETS
01	Men	128	Var	50	106

Larisa V. Sasevich 6-24-13
REGISTERED CIVIL ENGINEER DATE

6-24-13
PLANS APPROVAL DATE

REGISTERED PROFESSIONAL ENGINEER LARISA V. SASEVICH No. C 71520 Exp. 12-31-13 CIVIL STATE OF CALIFORNIA

THE STATE OF CALIFORNIA OR ITS OFFICERS OR AGENTS SHALL NOT BE RESPONSIBLE FOR THE ACCURACY OR COMPLETENESS OF SCANNED COPIES OF THIS PLAN SHEET.

T12N R13W MDB&M
SECTION 1

NOTES:

1. FOR ACCURATE RIGHT OF WAY DATA, CONTACT RIGHT OF WAY ENGINEERING AT THE DISTRICT OFFICE.
2. THIS PLAN ACCURATE FOR DRAINAGE WORK ONLY.
3. INLET STRUCTURE SKEW ANGLE IS MEASURED FROM A LINE PERPENDICULAR TO THE CULVERT ALIGNMENT.

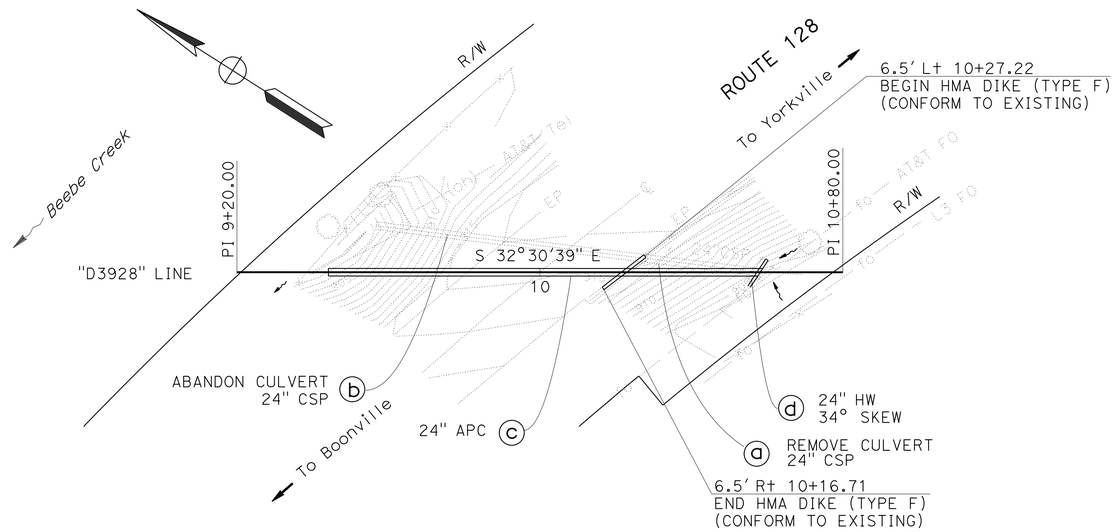

DRAINAGE SYSTEM 47
ROUTE 128
PM 39.28
SCALE: 1" = 20'

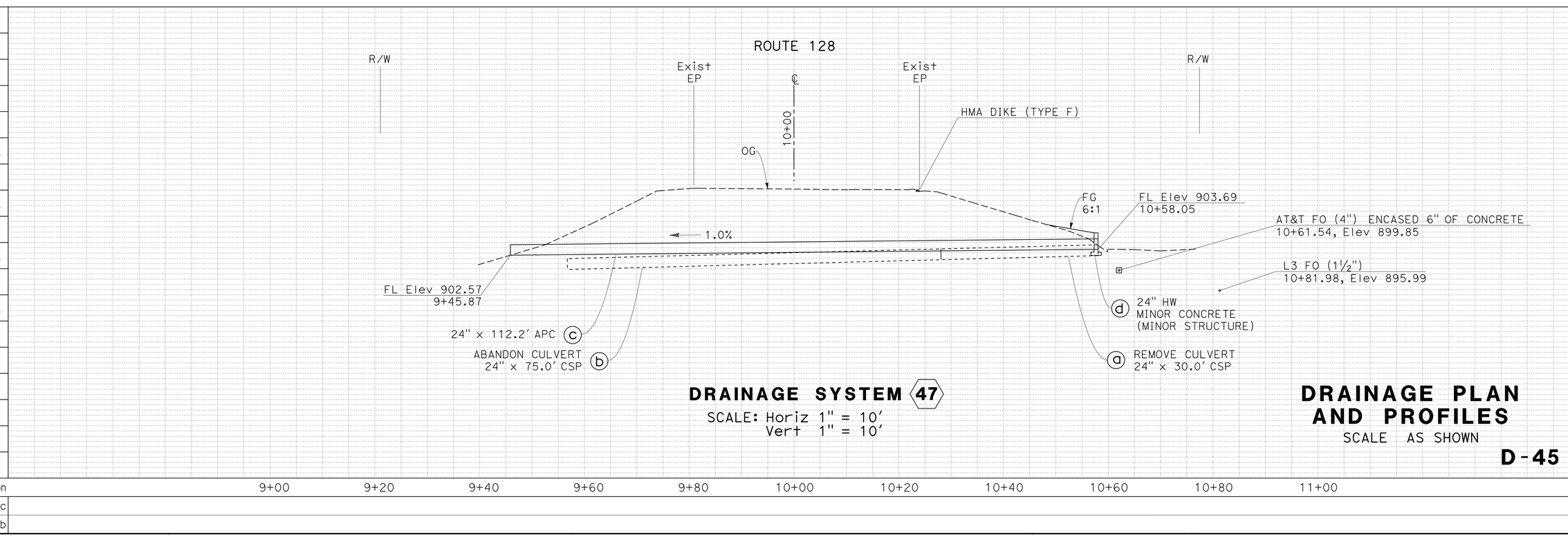

DRAINAGE SYSTEM 47
SCALE: Horiz 1" = 10'
Vert 1" = 10'

DRAINAGE PLAN AND PROFILES
SCALE AS SHOWN

D-45

REVISED BY | DATE REVISED
LARISA V. SASEVICH | TIMOTHY TRINH
CALCULATED-DESIGNED BY | CHECKED BY
FUNCTIONAL SUPERVISOR: ROBERT E. POLGAR

STATE OF CALIFORNIA - DEPARTMENT OF TRANSPORTATION
Caltrans® DIVISION OF ENGINEERING

LAST REVISION 03-30-11
DATE PLOTTED => 07-AUG-2013
TIME PLOTTED => 14:58

Dist	COUNTY	ROUTE	POST MILES TOTAL PROJECT	SHEET No.	TOTAL SHEETS
01	Men	128	Var	51	106

Robert E. Polgar 9-27-11
REGISTERED CIVIL ENGINEER DATE

6-24-13
PLANS APPROVAL DATE

REGISTERED PROFESSIONAL ENGINEER ROBERT E. POLGAR No. C 51768 Exp. 6-30-14 CIVIL STATE OF CALIFORNIA

THE STATE OF CALIFORNIA OR ITS OFFICERS OR AGENTS SHALL NOT BE RESPONSIBLE FOR THE ACCURACY OR COMPLETENESS OF SCANNED COPIES OF THIS PLAN SHEET.

T12N R12W MDB&M
SECTION 7

NOTES:

1. FOR ACCURATE RIGHT OF WAY DATA, CONTACT RIGHT OF WAY ENGINEERING AT THE DISTRICT OFFICE.
2. THIS PLAN ACCURATE FOR DRAINAGE WORK ONLY.
3. FOR ROCK INVERT PAVING AND CONCRETE INVERT PAVING DETAILS SEE DRAINAGE DETAIL SHEETS

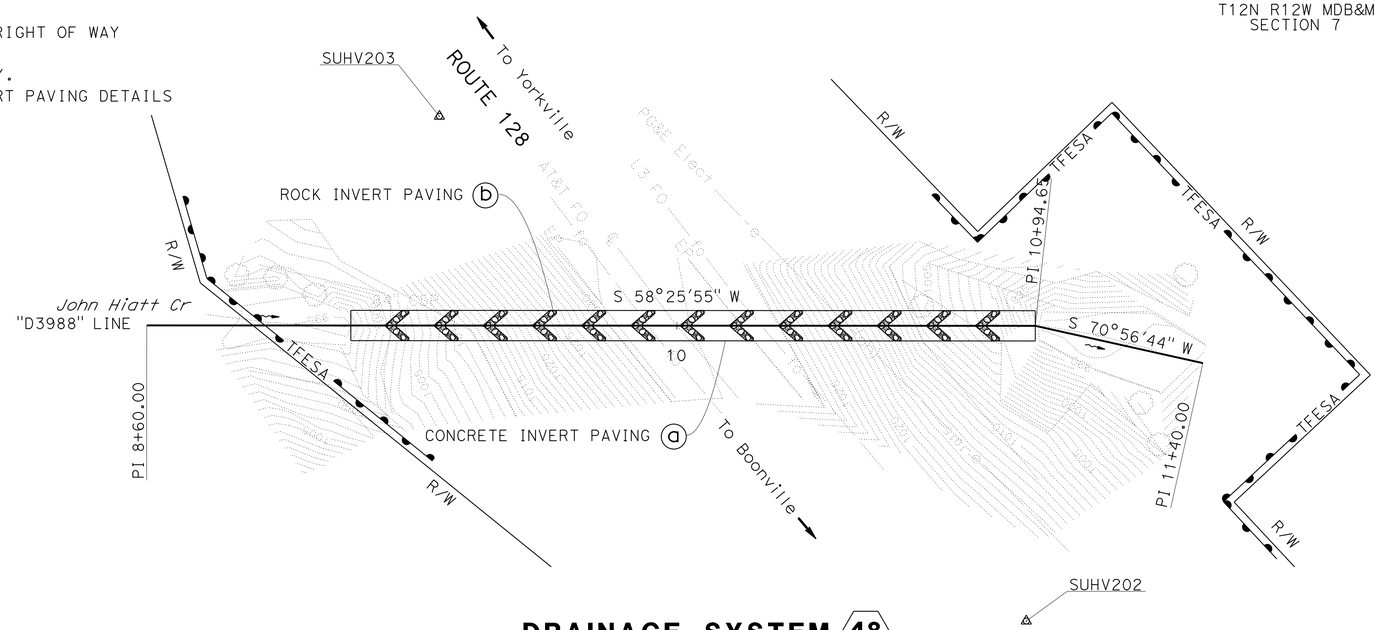

DRAINAGE SYSTEM (48)
ROUTE 128
PM 39.88
SCALE: 1" = 20'

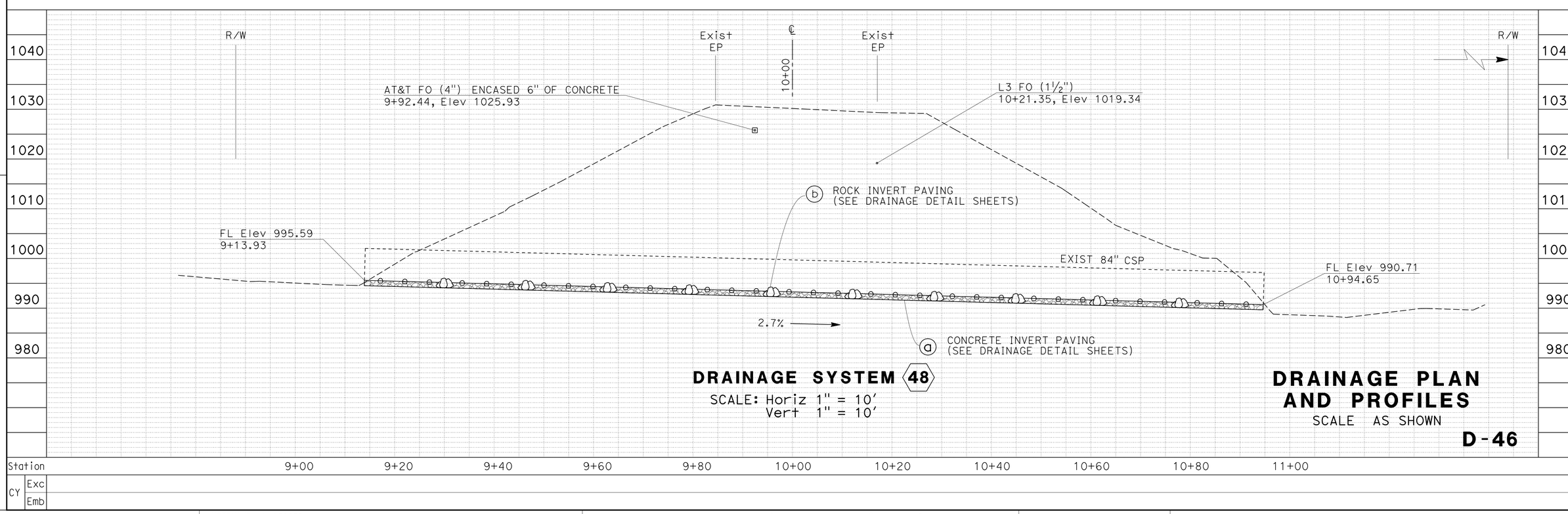

DRAINAGE SYSTEM (48)
SCALE: Horiz 1" = 10'
Vert 1" = 10'

DRAINAGE PLAN AND PROFILES
SCALE AS SHOWN

D-46

STATE OF CALIFORNIA - DEPARTMENT OF TRANSPORTATION
Caltrans
DIVISION OF ENGINEERING
FUNCTIONAL SUPERVISOR: ROBERT E. POLGAR
CALCULATED-DESIGNED BY: ROBERT E. POLGAR
CHECKED BY: TIMOTHY TRINH
REVISED BY
DATE REVISED

LAST REVISION 03-30-11
DATE PLOTTED => 07-AUG-2013
TIME PLOTTED => 14:58

Dist	COUNTY	ROUTE	POST MILES TOTAL PROJECT	SHEET No.	TOTAL SHEETS
01	Men	128	Var	52	106

Larisa V. Sasevich 9-27-11
REGISTERED CIVIL ENGINEER DATE

6-24-13
PLANS APPROVAL DATE

REGISTERED PROFESSIONAL ENGINEER LARISA V. SASEVICH No. C 71520 Exp. 12-31-13 CIVIL STATE OF CALIFORNIA

THE STATE OF CALIFORNIA OR ITS OFFICERS OR AGENTS SHALL NOT BE RESPONSIBLE FOR THE ACCURACY OR COMPLETENESS OF SCANNED COPIES OF THIS PLAN SHEET.

T12N R12W MDB&M
SECTION 7

NOTES:

1. FOR ACCURATE RIGHT OF WAY DATA, CONTACT RIGHT OF WAY ENGINEERING AT THE DISTRICT OFFICE.
2. THIS PLAN ACCURATE FOR DRAINAGE WORK ONLY.
3. FOR ROCK SLOPE PROTECTION DETAILS SEE DRAINAGE DETAIL SHEETS.
4. INLET STRUCTURE SKEW ANGLE IS MEASURED FROM A LINE PERPENDICULAR TO THE CULVERT ALIGNMENT.

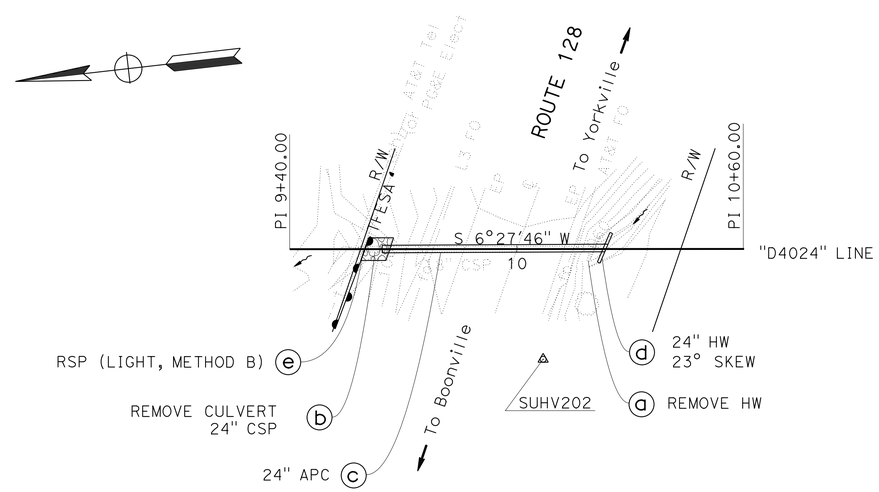

DRAINAGE SYSTEM 49

ROUTE 128
PM 40.24
SCALE: 1" = 20'

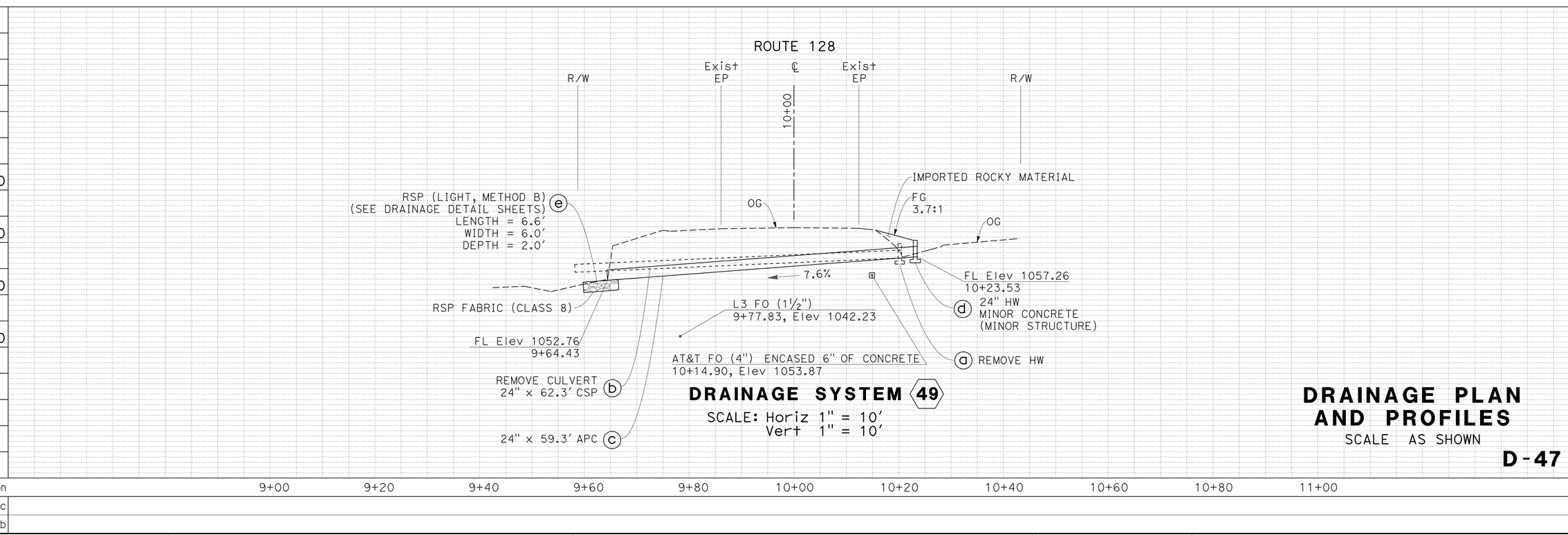

DRAINAGE SYSTEM 49

SCALE: Horiz 1" = 10'
Vert 1" = 10'

DRAINAGE PLAN AND PROFILES

SCALE AS SHOWN

D-47

STATE OF CALIFORNIA - DEPARTMENT OF TRANSPORTATION
Caltrans
DIVISION OF ENGINEERING

FUNCTIONAL SUPERVISOR: ROBERT E. POLGAR
CALCULATED-DESIGNED BY: LARISA V. SASEVICH
CHECKED BY: TIMOTHY TRINH
REVISED BY
DATE REVISED

LAST REVISION 03-30-11
DATE PLOTTED => 07-AUG-2013
TIME PLOTTED => 14:58

Dist	COUNTY	ROUTE	POST MILES TOTAL PROJECT	SHEET No.	TOTAL SHEETS
01	Men	128	Var	53	106

Larisa V. Sasevich 9-27-11
REGISTERED CIVIL ENGINEER DATE

6-24-13
PLANS APPROVAL DATE

REGISTERED PROFESSIONAL ENGINEER LARISA V. SASEVICH No. C 71520 Exp. 12-31-13 CIVIL STATE OF CALIFORNIA

THE STATE OF CALIFORNIA OR ITS OFFICERS OR AGENTS SHALL NOT BE RESPONSIBLE FOR THE ACCURACY OR COMPLETENESS OF SCANNED COPIES OF THIS PLAN SHEET.

T12N R12W MDB&M
SECTION 8

NOTES:

1. FOR ACCURATE RIGHT OF WAY DATA, CONTACT RIGHT OF WAY ENGINEERING AT THE DISTRICT OFFICE.
2. THIS PLAN ACCURATE FOR DRAINAGE WORK ONLY.
3. INLET STRUCTURE SKEW ANGLE IS MEASURED FROM A LINE PERPENDICULAR TO THE CULVERT ALIGNMENT.
4. CONTRACTOR TO COORDINATE WITH THE ENGINEER TO PROTECT IN PLACE AT&T FO LINE .
5. THE ENGINEER IS TO BE CONTACTED A MINIMUM OF 10 WORKING DAYS PRIOR TO WORKING AT THIS LOCATION.

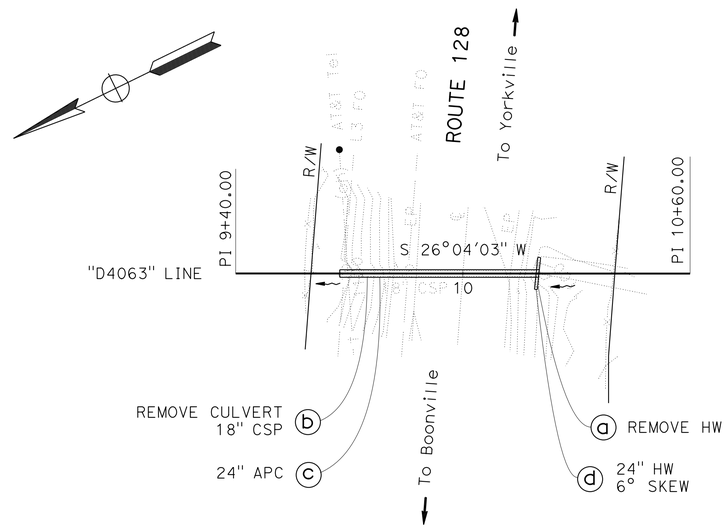

DRAINAGE SYSTEM 50
ROUTE 128
PM 40.63
SCALE: 1" = 20'

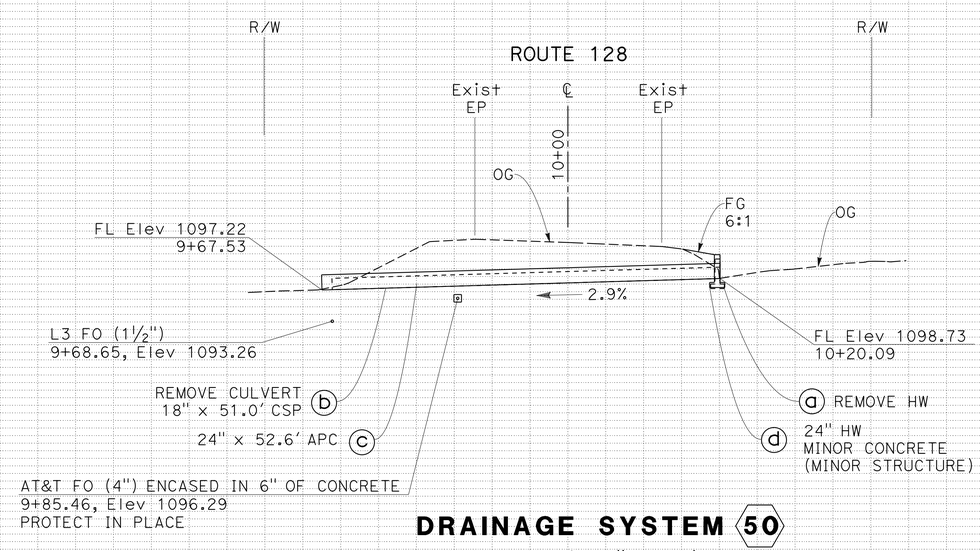

DRAINAGE SYSTEM 50
SCALE: Horiz 1" = 10'
Vert 1" = 10'

DRAINAGE PLAN AND PROFILES

SCALE AS SHOWN

D-48

Station	9+00	9+20	9+40	9+60	9+80	10+00	10+20	10+40	10+60	10+80	11+00
CY Exc											
CY Emb											

STATE OF CALIFORNIA - DEPARTMENT OF TRANSPORTATION
Caltrans
DIVISION OF ENGINEERING
FUNCTIONAL SUPERVISOR: ROBERT E. POLGAR
CALCULATED-DESIGNED BY: LARISA V. SASEVICH
CHECKED BY: TIMOTHY TRINH
REVISED BY / DATE REVISED

LAST REVISION 03-30-11
DATE PLOTTED => 07-AUG-2013
TIME PLOTTED => 14:58

Dist	COUNTY	ROUTE	POST MILES TOTAL PROJECT	SHEET No.	TOTAL SHEETS
01	Men	128	Var	54	106

Larisa V. Sasevich 9-27-11
REGISTERED CIVIL ENGINEER DATE

6-24-13
PLANS APPROVAL DATE

REGISTERED PROFESSIONAL ENGINEER LARISA V. SASEVICH No. C 71520 Exp. 12-31-13 CIVIL STATE OF CALIFORNIA

THE STATE OF CALIFORNIA OR ITS OFFICERS OR AGENTS SHALL NOT BE RESPONSIBLE FOR THE ACCURACY OR COMPLETENESS OF SCANNED COPIES OF THIS PLAN SHEET.

NOTES:

1. FOR ACCURATE RIGHT OF WAY DATA, CONTACT RIGHT OF WAY ENGINEERING AT THE DISTRICT OFFICE.
2. THIS PLAN ACCURATE FOR DRAINAGE WORK ONLY.
3. FOR ROCK SLOPE PROTECTION DETAILS SEE DRAINAGE DETAIL SHEETS.

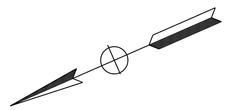

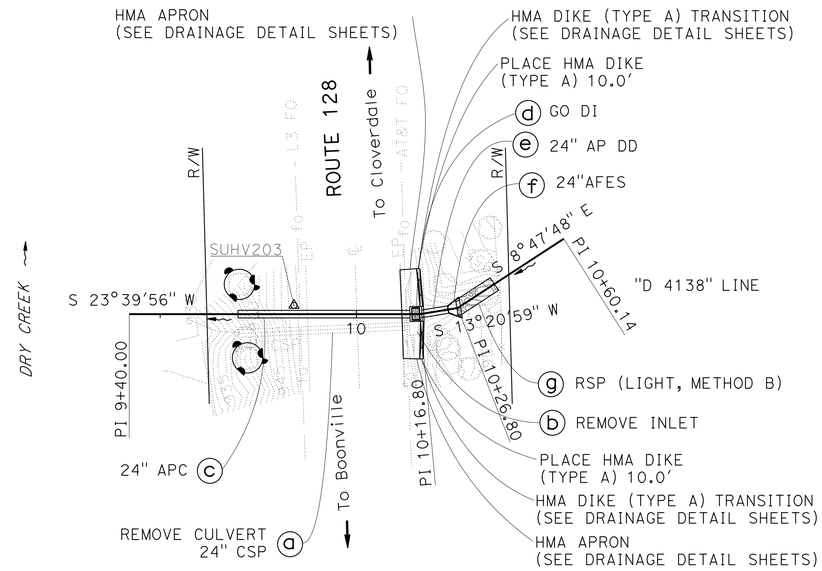

DRAINAGE SYSTEM 51
ROUTE 128
PM 41.38
SCALE: 1" = 20'

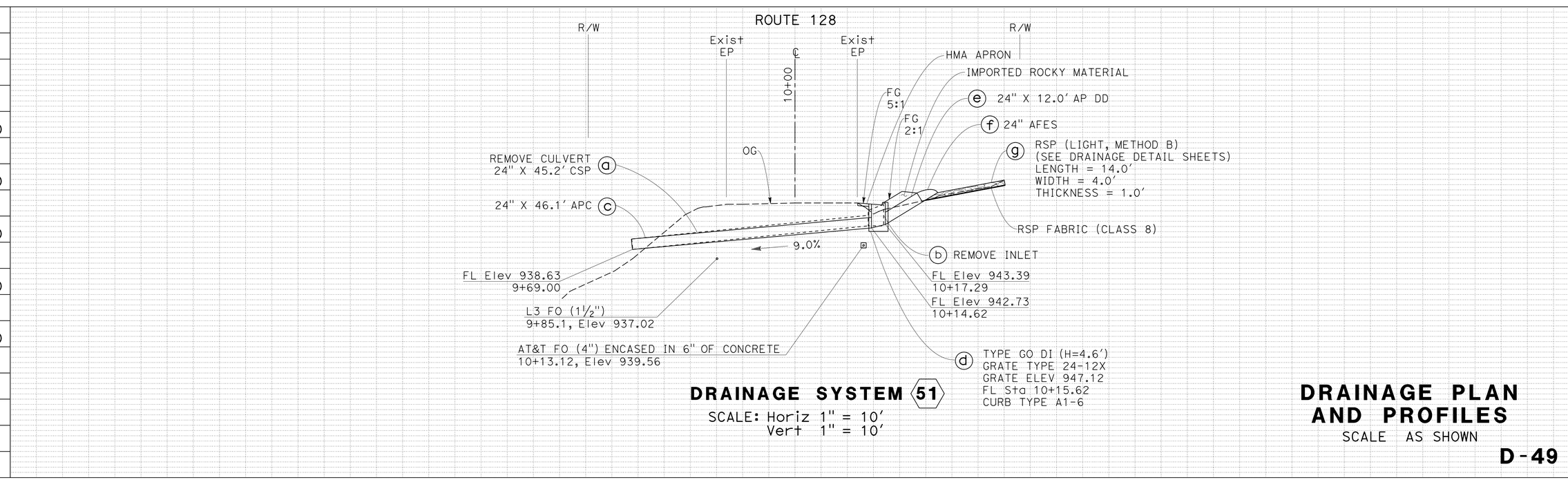

DRAINAGE SYSTEM 51
SCALE: Horiz 1" = 10'
Vert 1" = 10'

DRAINAGE PLAN AND PROFILES
SCALE AS SHOWN

D-49

STATE OF CALIFORNIA - DEPARTMENT OF TRANSPORTATION
Caltrans® DIVISION OF ENGINEERING

FUNCTIONAL SUPERVISOR: ROBERT E. POLGAR
CALCULATED-DESIGNED BY: LARISA V. SASEVICH
CHECKED BY: R SCOTT FOSTER
REVISED BY / DATE REVISED

LAST REVISION 06-21-13
DATE PLOTTED => 07-AUG-2013
TIME PLOTTED => 14:58

Dist	COUNTY	ROUTE	POST MILES TOTAL PROJECT	SHEET No.	TOTAL SHEETS
01	Men	128	Var	55	106

Larisa V. Sasevich 9-27-11
REGISTERED CIVIL ENGINEER DATE

6-24-13
PLANS APPROVAL DATE

REGISTERED PROFESSIONAL ENGINEER LARISA V. SASEVICH No. C 71520 Exp. 12-31-13 CIVIL STATE OF CALIFORNIA

THE STATE OF CALIFORNIA OR ITS OFFICERS OR AGENTS SHALL NOT BE RESPONSIBLE FOR THE ACCURACY OR COMPLETENESS OF SCANNED COPIES OF THIS PLAN SHEET.

T12N R12W MDB&M
SECTION 13

NOTES:

1. FOR ACCURATE RIGHT OF WAY DATA, CONTACT RIGHT OF WAY ENGINEERING AT THE DISTRICT OFFICE.
2. THIS PLAN ACCURATE FOR DRAINAGE WORK ONLY.
3. FOR LOW PIPE CLEARANCE (MONOLITHIC POUR) DETAILS SEE DRAINAGE DETAIL SHEETS.
4. INLET STRUCTURE SKEW ANGLE IS MEASURED FROM A LINE PERPENDICULAR TO THE CULVERT ALIGNMENT.
5. FOR CONCRETE BACKFILL (PIPE TRENCH) DETAILS SEE DRAINAGE DETAIL SHEETS.

POINT	STATION	OFFSET
1	9+70.50	14.12 R+
2	9+70.59	15.41 L+
3	9+78.36	15.43 L+
4	10+14.25	15.53 L+
5	10+32.93	15.59 L+
6	10+32.84	13.94 R+
7	10+16.16	13.99 R+
8	9+78.73	14.10 R+

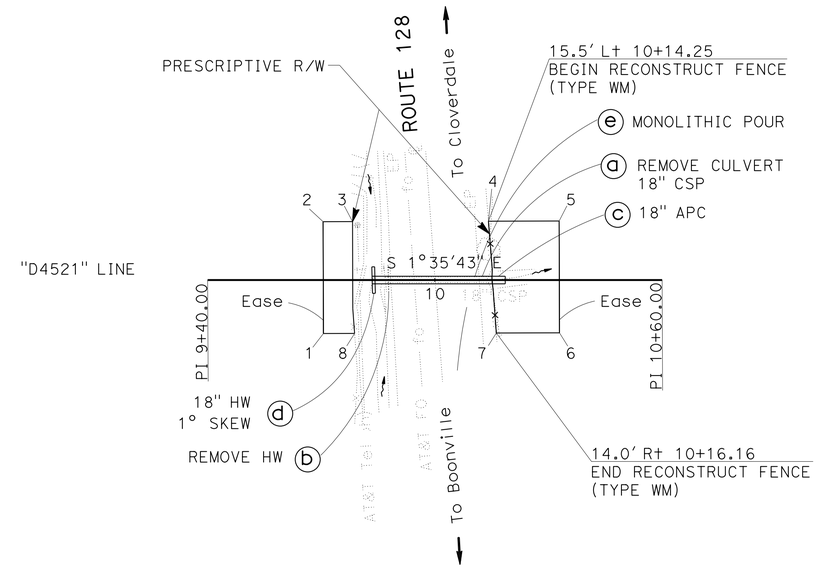

DRAINAGE SYSTEM 52
ROUTE 128
PM 45.21
SCALE: 1" = 20'

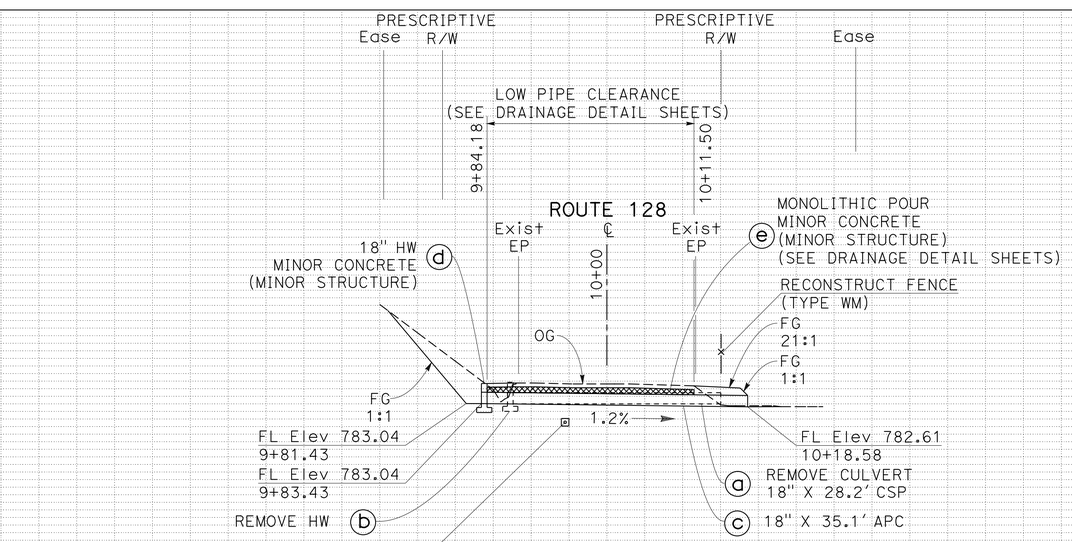

DRAINAGE SYSTEM 52
SCALE: Horiz 1" = 10'
Vert 1" = 10'

DRAINAGE PLAN AND PROFILES

SCALE AS SHOWN

D-50

Station	9+00	9+20	9+40	9+60	9+80	10+00	10+20	10+40	10+60	10+80	11+00
CY Exc											
CY Emb											

STATE OF CALIFORNIA - DEPARTMENT OF TRANSPORTATION
Caltrans® DIVISION OF ENGINEERING
FUNCTIONAL SUPERVISOR: ROBERT E. POLGAR
CALCULATED-DESIGNED BY: LARISA V. SASEVICH
CHECKED BY: TIMOTHY TRINH
REVISED BY / DATE REVISED

LAST REVISION 03-30-11
DATE PLOTTED => 07-AUG-2013
TIME PLOTTED => 14:58

Dist	COUNTY	ROUTE	POST MILES TOTAL PROJECT	SHEET No.	TOTAL SHEETS
01	Men	128	Var	56	106

Larisa V. Sasevich 9-27-11
REGISTERED CIVIL ENGINEER DATE

6-24-13
PLANS APPROVAL DATE

REGISTERED PROFESSIONAL ENGINEER LARISA V. SASEVICH No. C 71520 Exp. 12-31-13 CIVIL STATE OF CALIFORNIA

THE STATE OF CALIFORNIA OR ITS OFFICERS OR AGENTS SHALL NOT BE RESPONSIBLE FOR THE ACCURACY OR COMPLETENESS OF SCANNED COPIES OF THIS PLAN SHEET.

T12N R12W MDB&M
SECTION 13

NOTES:

1. FOR ACCURATE RIGHT OF WAY DATA, CONTACT RIGHT OF WAY ENGINEERING AT THE DISTRICT OFFICE.
2. THIS PLAN ACCURATE FOR DRAINAGE WORK ONLY.
3. FOR LOW PIPE CLEARANCE DETAILS (MONOLITHIC POUR) SEE DRAINAGE DETAIL SHEETS.

POINT	STATION	OFFSET
1	9+71.44	13.86 Rt
2	9+71.44	14.03 Lt
3	9+78.33	14.03 Lt
4	10+14.39	14.03 Lt
5	10+41.86	14.03 Lt
6	10+39.66	13.86 Rt
7	10+13.94	13.86 Rt
8	9+77.71	13.86 Rt

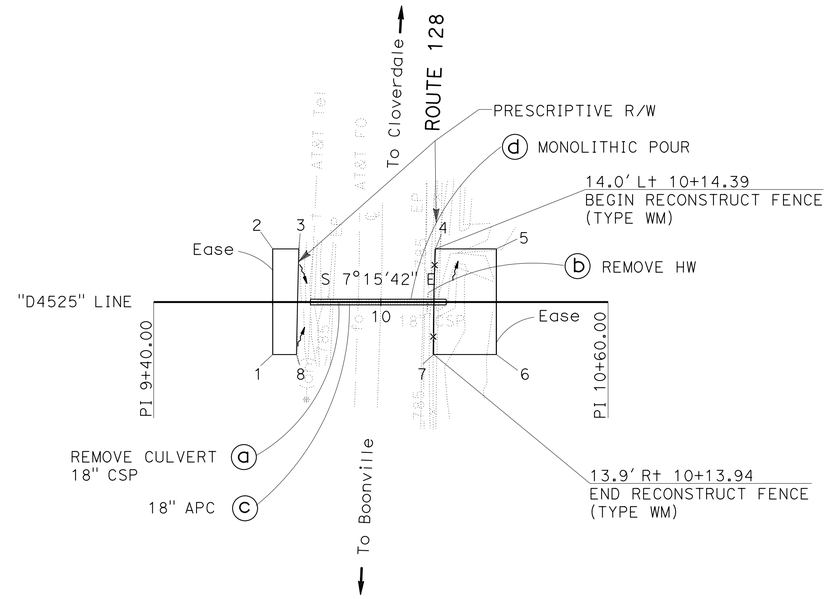

DRAINAGE SYSTEM 53
ROUTE 128
PM 45.25
SCALE: 1" = 20'

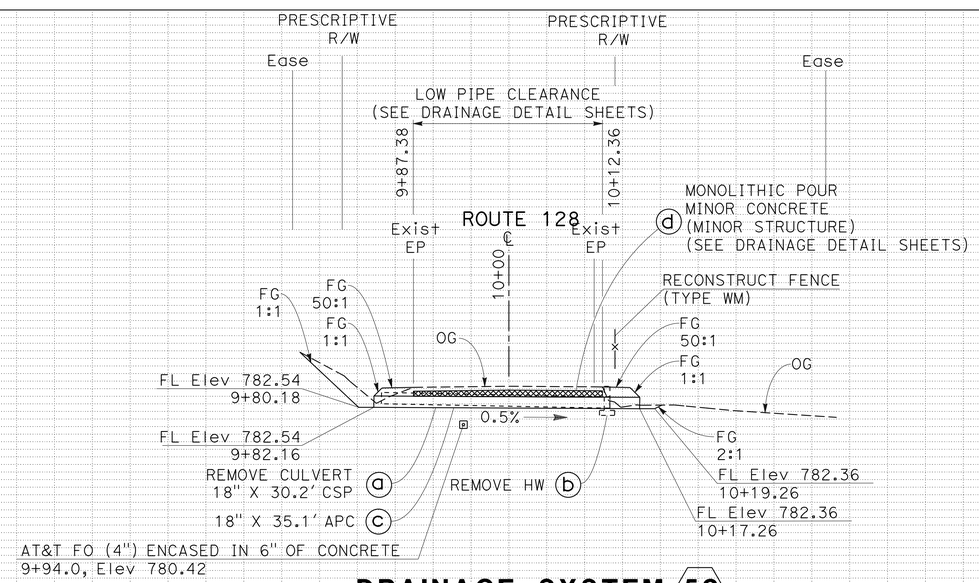

DRAINAGE SYSTEM 53
SCALE: Horiz 1" = 10'
Vert 1" = 10'

DRAINAGE PLAN AND PROFILES
SCALE AS SHOWN

D-51

Station 9+00 9+20 9+40 9+60 9+80 10+00 10+20 10+40 10+60 10+80 11+00

CY Exc
Emb

STATE OF CALIFORNIA - DEPARTMENT OF TRANSPORTATION
DIVISION OF ENGINEERING
FUNCTIONAL SUPERVISOR ROBERT E. POLGAR
CALCULATED-DESIGNED BY LARISA V. SASEVICH
CHECKED BY TIMOTHY TRINH
REVISED BY
DATE REVISED

LAST REVISION 03-30-11
DATE PLOTTED => 07-AUG-2013
TIME PLOTTED => 14:58

Dist	COUNTY	ROUTE	POST MILES TOTAL PROJECT	SHEET No.	TOTAL SHEETS
01	Men	128	Var	57	106

Larisa V. Sasevich 9-27-11
REGISTERED CIVIL ENGINEER DATE

6-24-13
PLANS APPROVAL DATE

REGISTERED PROFESSIONAL ENGINEER LARISA V. SASEVICH No. C 71520 Exp. 12-31-13 CIVIL STATE OF CALIFORNIA

THE STATE OF CALIFORNIA OR ITS OFFICERS OR AGENTS SHALL NOT BE RESPONSIBLE FOR THE ACCURACY OR COMPLETENESS OF SCANNED COPIES OF THIS PLAN SHEET.

T12N R12W MDB&M
SECTION 13

NOTES:

1. FOR ACCURATE RIGHT OF WAY DATA, CONTACT RIGHT OF WAY ENGINEERING AT THE DISTRICT OFFICE.
2. THIS PLAN ACCURATE FOR DRAINAGE WORK ONLY.
3. FOR ROCK SLOPE PROTECTION DETAILS SEE DRAINAGE DETAIL SHEETS.
4. CONTRACTOR TO COORDINATE WITH THE ENGINEER TO PROTECT IN PLACE AT&T FO LINE.
5. THE ENGINEER IS TO BE CONTACTED A MINIMUM OF 10 WORKING DAYS PRIOR TO WORKING AT THIS LOCATION.

POINT	STATION	OFFSET
1	9+70.44	14.11 R+
2	9+69.69	215.41 L+
3	9+79.28	15.65 L+
4	10+34.59	17.05 L+
5	10+55.00	17.56 L+
6	10+55.71	11.96 R+
7	10+33.64	12.51 L+
8	9+74.91	13.97 R+

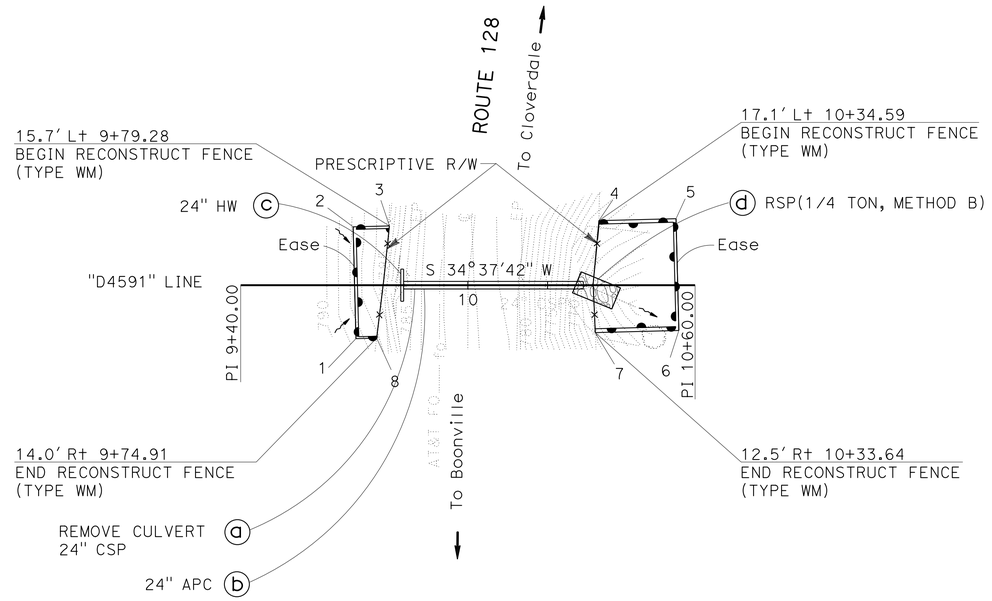

DRAINAGE SYSTEM (55)
ROUTE 128
PM 45.91
SCALE: 1" = 20'

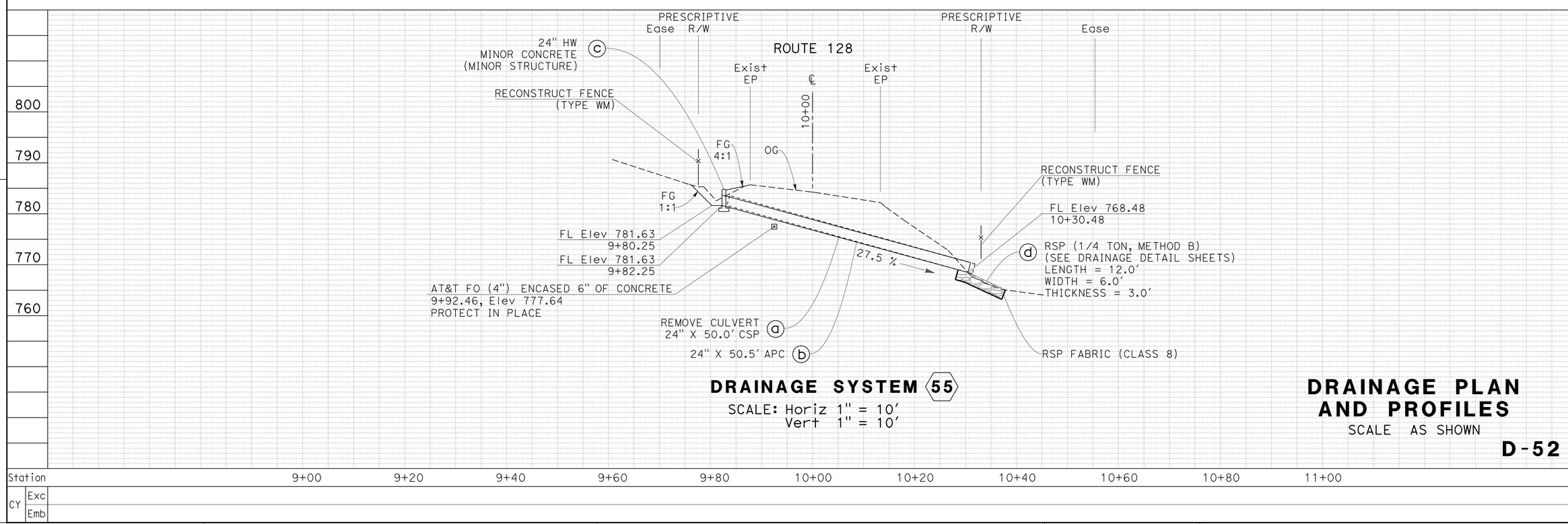

DRAINAGE SYSTEM (55)
SCALE: Horiz 1" = 10'
Vert 1" = 10'

DRAINAGE PLAN AND PROFILES

SCALE AS SHOWN

D-52

REVISED BY | DATE REVISED
LARISA V. SASEVICH | TIMOTHY TRINH
CALCULATED-DESIGNED BY | CHECKED BY
FUNCTIONAL SUPERVISOR | ROBERT E. POLGAR

STATE OF CALIFORNIA - DEPARTMENT OF TRANSPORTATION
Caltrans
DIVISION OF ENGINEERING

LAST REVISION 03-30-11
DATE PLOTTED => 07-AUG-2013
TIME PLOTTED => 14:58

Dist	COUNTY	ROUTE	POST MILES TOTAL PROJECT	SHEET No.	TOTAL SHEETS
01	Men	128	Var	58	106

Larisa V. Sasevich 9-27-11
REGISTERED CIVIL ENGINEER DATE

6-24-13
PLANS APPROVAL DATE

REGISTERED PROFESSIONAL ENGINEER LARISA V. SASEVICH No. C 71520 Exp. 12-31-13 CIVIL STATE OF CALIFORNIA

THE STATE OF CALIFORNIA OR ITS OFFICERS OR AGENTS SHALL NOT BE RESPONSIBLE FOR THE ACCURACY OR COMPLETENESS OF SCANNED COPIES OF THIS PLAN SHEET.

T12N R11W MDB&M
SECTION 21

NOTES:

1. FOR ACCURATE RIGHT OF WAY DATA, CONTACT RIGHT OF WAY ENGINEERING AT THE DISTRICT OFFICE.
2. THIS PLAN ACCURATE FOR DRAINAGE WORK ONLY.
3. FOR ROCK SLOPE PROTECTION DETAILS SEE DRAINAGE DETAIL SHEETS.
4. THE ANGLE OF ELBOW IS APPROXIMATE. THE EXACT ANGLE WILL BE DETERMINED IN THE FIELD BY THE ENGINEER.
5. PIPE STAKES FOR ANCHOR ASSEMBLY TO BE INSERTED THROUGH BRACKET WELDED TO DOWNDRAIN.

POINT	STATION	OFFSET
1	10+15.43	11.00 R+
2	10+28.87	26.73 L+
3	10+64.35	28.48 L+
4	10+66.17	8.50 R+

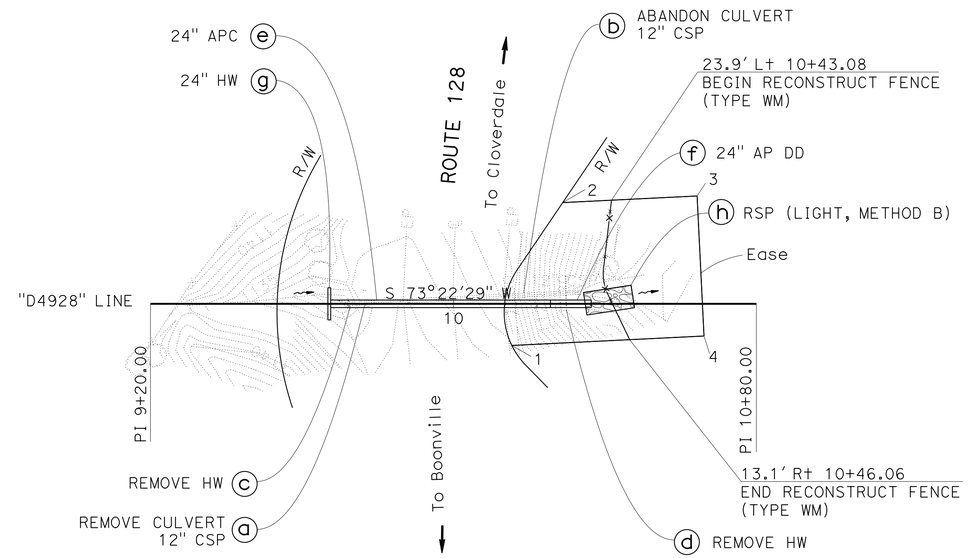

DRAINAGE SYSTEM 56

ROUTE 128
PM 49.28
SCALE: 1" = 20'

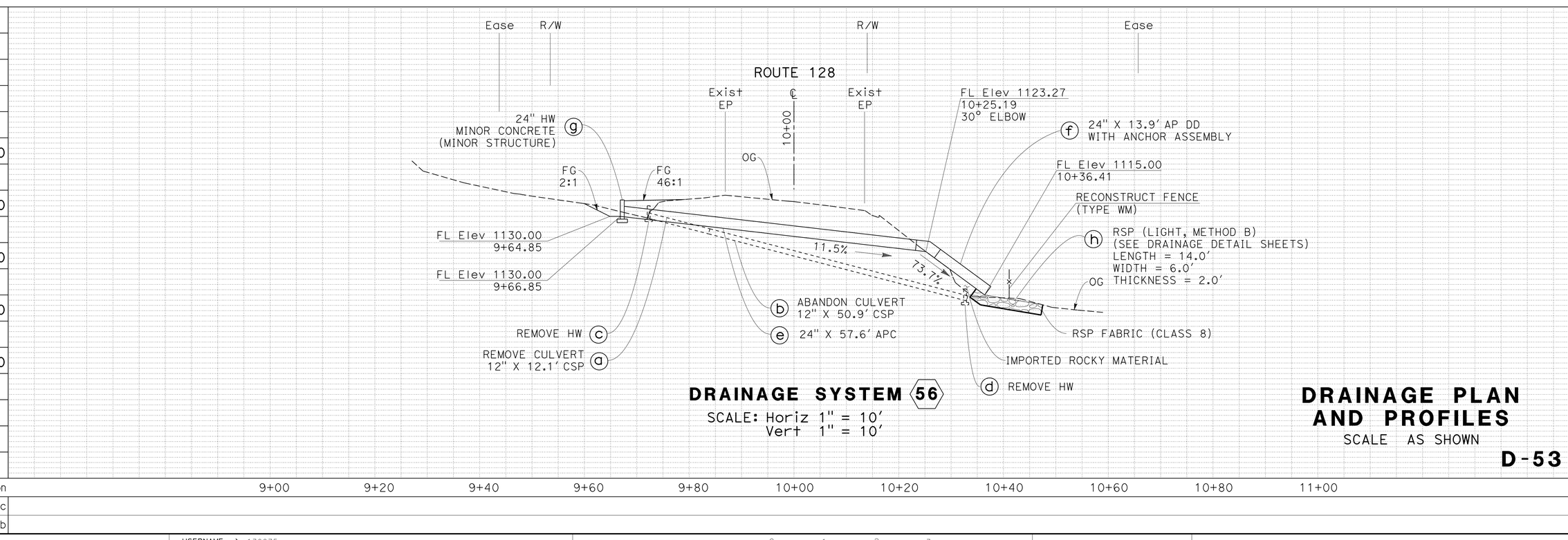

DRAINAGE SYSTEM 56

SCALE: Horiz 1" = 10'
Vert 1" = 10'

DRAINAGE PLAN AND PROFILES

SCALE AS SHOWN

D-53

REVISED BY | DATE REVISED
LARISA V. SASEVICH | TIMOTHY TRINH
CALCULATED-DESIGNED BY | CHECKED BY
FUNCTIONAL SUPERVISOR: ROBERT E. POLGAR

STATE OF CALIFORNIA - DEPARTMENT OF TRANSPORTATION
Caltrans® DIVISION OF ENGINEERING

LAST REVISION 03-30-11 | DATE PLOTTED => 07-AUG-2013 | TIME PLOTTED => 14:58

Dist	COUNTY	ROUTE	POST MILES TOTAL PROJECT	SHEET No.	TOTAL SHEETS
01	Men	128	Var	59	106

Larisa V. Sasevich 9-27-11
REGISTERED CIVIL ENGINEER DATE

6-24-13
PLANS APPROVAL DATE

REGISTERED PROFESSIONAL ENGINEER LARISA V. SASEVICH No. 71520 Exp. 12-31-13 CIVIL STATE OF CALIFORNIA

THE STATE OF CALIFORNIA OR ITS OFFICERS OR AGENTS SHALL NOT BE RESPONSIBLE FOR THE ACCURACY OR COMPLETENESS OF SCANNED COPIES OF THIS PLAN SHEET.

NOTES:

1. FOR LENGTH, WIDTH, AND DEPTH OF RSP SEE DRAINAGE PLAN AND PROFILE SHEETS.

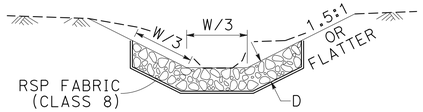

RSP LINED DITCH DETAIL

ABBREVIATIONS:

L - LENGTH OF RSP
W - WIDTH OF RSP
D - DEPTH OF RSP

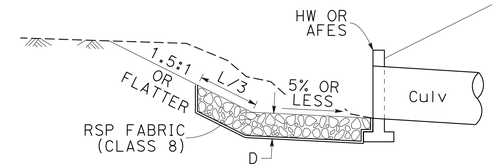

RSP AT INLET DETAIL

RSP LINED DITCH

DRAINAGE SYSTEM No.	PM
10	15.90
31	27.54

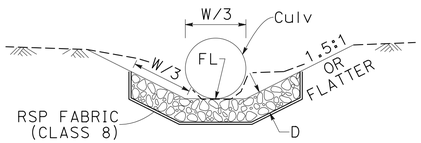

SECTION B-B

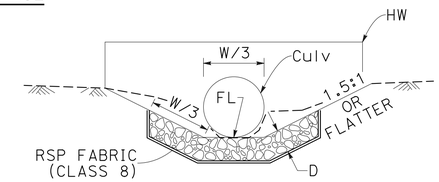

SECTION F-F

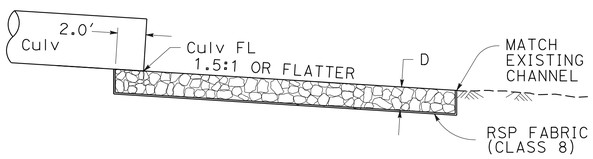

SECTION A-A

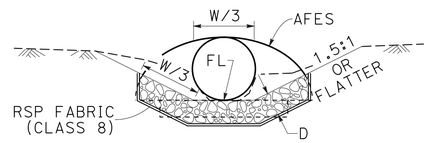

SECTION D-D

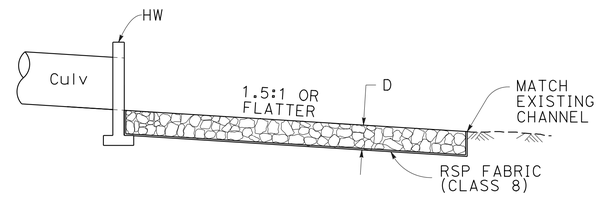

SECTION E-E

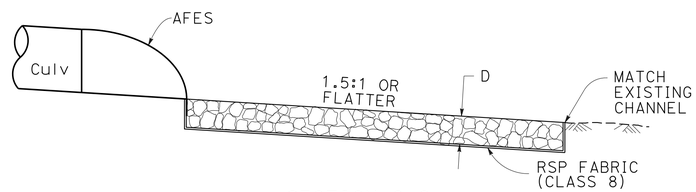

SECTION C-C

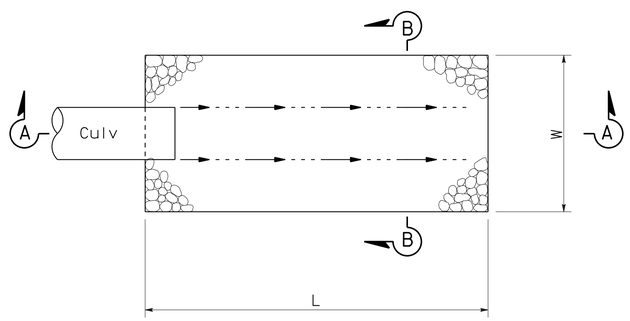

PLAN

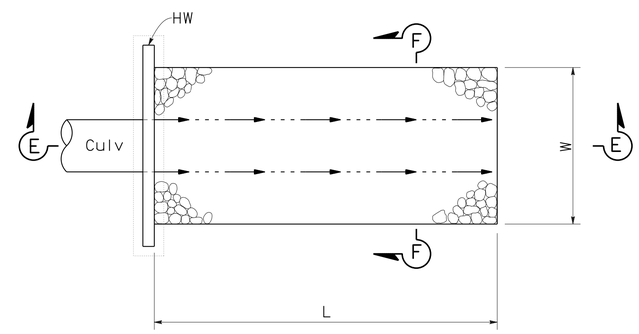

PLAN

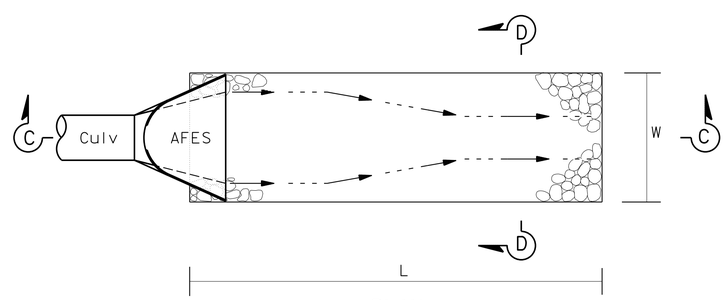

PLAN

RSP WITH HW END TREATMENT

DRAINAGE SYSTEM No.	PM	DRAINAGE SYSTEM No.	PM
9	15.62	28	22.97
14	17.11	51	41.38

RSP WITHOUT END TREATMENT

DRAINAGE SYSTEM No.	PM	DRAINAGE SYSTEM No.	PM	DRAINAGE SYSTEM No.	PM
9	15.62	30	24.55	42	33.78
12	16.88	33	30.75	46	39.22
16	17.51	35	30.94	49	40.24
18	18.28	36	30.97	55	45.91
20	18.88	39	32.01	56	49.28
21	19.30	40	33.23		
26	21.96	41	33.70		

RSP WITH AFES END TREATMENT

DRAINAGE SYSTEM No.	PM
24	21.23
51	41.38

DRAINAGE DETAILS

NO SCALE

DD-1

STATE OF CALIFORNIA - DEPARTMENT OF TRANSPORTATION
DIVISION OF ENGINEERING
Caltrans
FUNCTIONAL SUPERVISOR: ROBERT E. POLGAR
CALCULATED-DESIGNED BY: LARISA V. SASEVICH
CHECKED BY: MARTIN GARCIA
REVISED BY
DATE REVISED

LAST REVISION 06-23-13
DATE PLOTTED => 07-AUG-2013
TIME PLOTTED => 14:58

Dist	COUNTY	ROUTE	POST MILES TOTAL PROJECT	SHEET No.	TOTAL SHEETS
01	Men	128	Var	60	106

Larisa V. Sasevich 9-27-11
REGISTERED CIVIL ENGINEER DATE

6-24-13
PLANS APPROVAL DATE

REGISTERED PROFESSIONAL ENGINEER
LARISA V. SASEVICH
No. 71520
Exp. 12-31-13
CIVIL
STATE OF CALIFORNIA

THE STATE OF CALIFORNIA OR ITS OFFICERS OR AGENTS SHALL NOT BE RESPONSIBLE FOR THE ACCURACY OR COMPLETENESS OF SCANNED COPIES OF THIS PLAN SHEET.

NOTE:

1. PLACE MARKER Min 2' AND Max 12' FROM EP. EXACT LOCATION WILL BE DETERMINED BY THE ENGINEER.

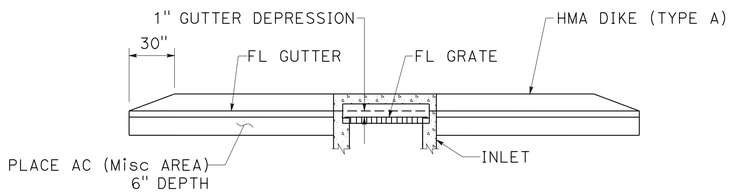

SECTION A-A
TYPE GO INLET

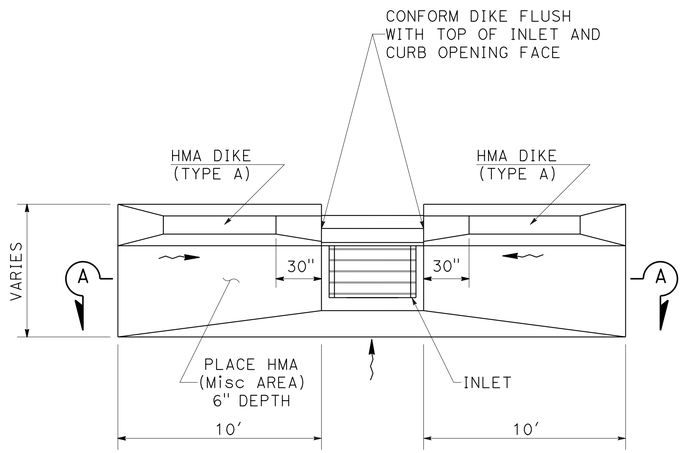

PLAN

HMA APRON

DRAINAGE SYSTEM No.	PM
4	14.67
40	33.23
43	36.01
51	41.38

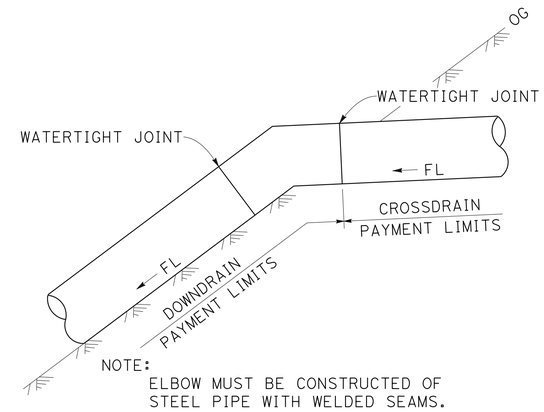

NOTE:
ELBOW MUST BE CONSTRUCTED OF STEEL PIPE WITH WELDED SEAMS.

DOWNDRAIN DETAILS

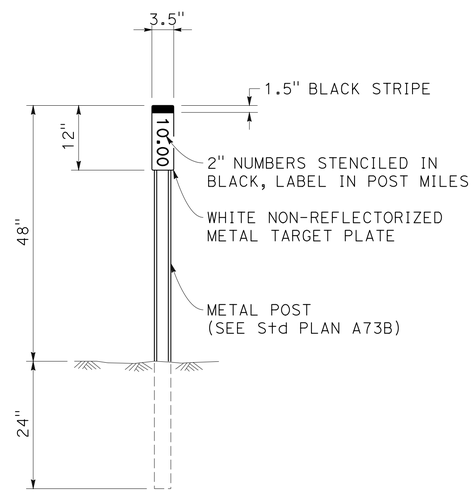

MARKER (CULVERT)

MARKER (CULVERT) LOCATIONS

Loc	COUNTY	ROUTE	PM	Loc	COUNTY	ROUTE	PM
1	Men	128	14.30	29	Men	128	23.75
2	Men	128	14.39	30	Men	128	24.55
3	Men	128	14.61	31	Men	128	27.54
4	Men	128	14.67	32	Men	128	30.06
5	Men	128	14.80	33	Men	128	30.75
6	Men	128	14.98	34	Men	128	30.82
7	Men	128	15.14	35	Men	128	30.94
8	Men	128	15.14(DW)	36	Men	128	30.97
9	Men	128	15.62	37	Men	128	31.84
10	Men	128	15.90	38	Men	128	31.86
11	Men	128	16.63	39	Men	128	32.01
12	Men	128	16.88	40	Men	128	33.23
13	Men	128	16.91	41	Men	128	33.70
14	Men	128	17.11	42	Men	128	33.78
15	Men	128	17.22	43	Men	128	36.01
16	Men	128	17.51	44	Men	128	36.63
17	OMITTED FROM CONTRACT			45	OMITTED FROM CONTRACT		
18	Men	128	18.28	46	Men	128	39.22
19	Men	128	18.46	47	Men	128	39.28
20	Men	128	18.88	48	Men	128	39.88
21	Men	128	19.30	49	Men	128	40.24
22	Men	128	19.36	50	Men	128	40.63
23	OMITTED FROM CONTRACT			51	Men	128	41.38
24	Men	128	21.23	52	Men	128	45.21
25	Men	128	21.80	53	Men	128	45.25
26	Men	128	21.96	54	OMITTED FROM CONTRACT		
27	Men	128	22.83	55	Men	128	45.91
28	Men	128	22.97	56	Men	128	49.28

DRAINAGE DETAILS
NO SCALE

DD-2

STATE OF CALIFORNIA - DEPARTMENT OF TRANSPORTATION
Caltrans® DIVISION OF ENGINEERING
FUNCTIONAL SUPERVISOR: ROBERT E. POLGAR
LARISA V. SASEVICH — MARTIN GARCIA
CALCULATED-DESIGNED BY / CHECKED BY
REVISED BY / DATE REVISED

LAST REVISION 06-23-13 | DATE PLOTTED => 07-AUG-2013 | TIME PLOTTED => 14:58

Dist	COUNTY	ROUTE	POST MILES TOTAL PROJECT	SHEET No.	TOTAL SHEETS
01	Men	128	Var	61	106

Larisa V. Sasevich 9-27-11
REGISTERED CIVIL ENGINEER DATE

6-24-13
PLANS APPROVAL DATE

REGISTERED PROFESSIONAL ENGINEER LARISA V. SASEVICH No. 71520 Exp. 12-31-13 CIVIL STATE OF CALIFORNIA

THE STATE OF CALIFORNIA OR ITS OFFICERS OR AGENTS SHALL NOT BE RESPONSIBLE FOR THE ACCURACY OR COMPLETENESS OF SCANNED COPIES OF THIS PLAN SHEET.

NOTE:

1. SEE STANDARD PLANS A62D, A62DA, AND A62F FOR EXCAVATION AND BACKFILL DETAILS.
2. REBAR TO BE EPOXY-COATED.
3. LONGITUDINAL JOINT SAW CUT DEPTH Max @ 2" PER WIDTH OF REINFORCED SLAB.

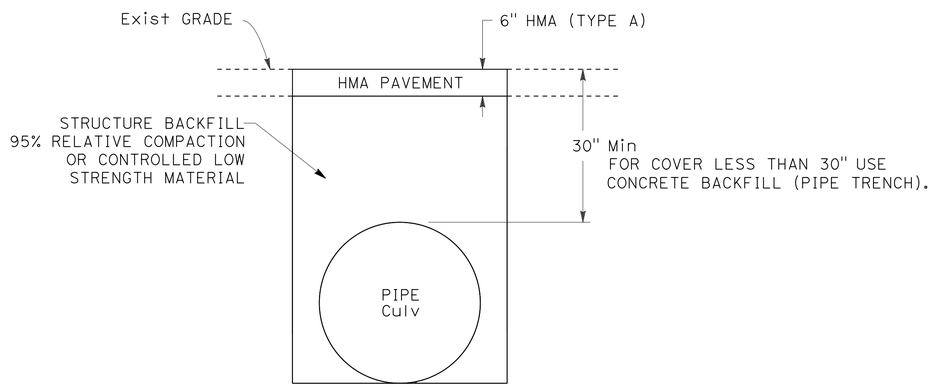

STRUCTURE BACKFILL UNDER EXISTING PVMT

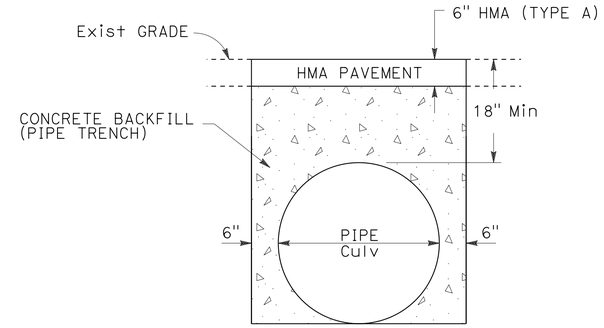

CONCRETE BACKFILL (PIPE TRENCH)

DRAINAGE SYSTEM No.	PM	CULVERT
3	14.61	24"
9	15.62	24"
15	17.22	24"
21	19.30	30"
22	19.36	36"
24	21.23	24"

DRAINAGE SYSTEM No.	PM	CULVERT
27	22.83	24"
28	22.97	48"
30	24.55	24"
34	30.82	24"
37	31.84	24"
43	36.01	24"

DRAINAGE SYSTEM No.	PM	CULVERT
1	14.30	24"
2	14.39	24"
4	14.67	24"
5	14.80	36"
6	14.98	24"
7	15.14	24"
8	15.14 DW	36"
10	15.90	36"
11	16.63	24"
12	16.88	24"
13	16.91	24"
14	17.11	66"
16	17.51	30"
18	18.28	24"
19	18.46	48"
20	18.88	24"

DRAINAGE SYSTEM No.	PM	CULVERT
26	21.96	30"
29	23.75	24"
32	30.06	24"
33	30.75	24"
35	30.94	24"
38	31.86	24"
39	32.01	24"
41	33.70	24"
40	33.23	24"
42	33.78	54"
46	39.22	24"
47	39.28	24"
49	40.24	24"
50	40.63	24"
51	41.38	24"
55	45.91	24"
56	49.28	24"

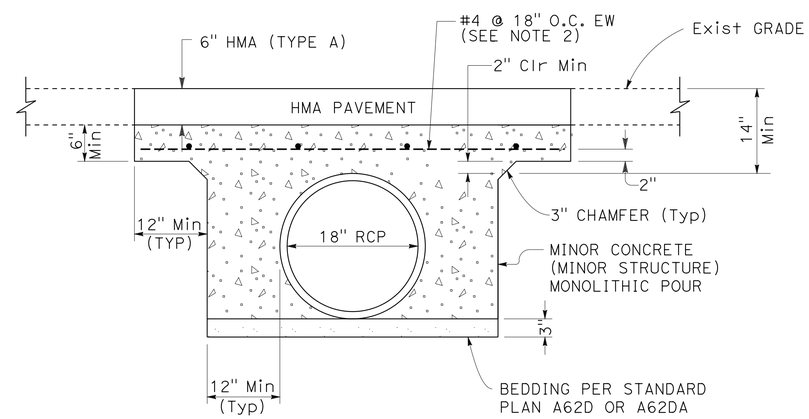

LOW PIPE CLEARANCE

DRAINAGE SYSTEM No.	PM	CULVERT
52	45.21	18"
53	45.25	18"

DRAINAGE DETAILS

NO SCALE

DD-3

STATE OF CALIFORNIA - DEPARTMENT OF TRANSPORTATION
Caltrans® DIVISION OF ENGINEERING

FUNCTIONAL SUPERVISOR: ROBERT E. POLGAR
CALCULATED-DESIGNED BY: LARISA V. SASEVICH
CHECKED BY: MARTIN GARCIA
REVISED BY / DATE REVISED

LAST REVISION 06-23-13 | DATE PLOTTED => 07-AUG-2013 | TIME PLOTTED => 14:58

Dist	COUNTY	ROUTE	POST MILES TOTAL PROJECT	SHEET No.	TOTAL SHEETS
01	Men	128	Var	62	106

REGISTERED CIVIL ENGINEER 9-27-11 DATE

6-24-13
PLANS APPROVAL DATE

REGISTERED PROFESSIONAL ENGINEER ROBERT E. POLGAR No. 51768 Exp. 6-30-14 CIVIL STATE OF CALIFORNIA

THE STATE OF CALIFORNIA OR ITS OFFICERS OR AGENTS SHALL NOT BE RESPONSIBLE FOR THE ACCURACY OR COMPLETENESS OF SCANNED COPIES OF THIS PLAN SHEET.

STEEL	Conc
LB	CY
190	3.09

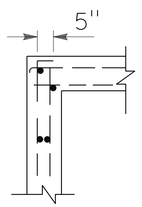

CORNER STEEL DETAIL

SECTION A-A

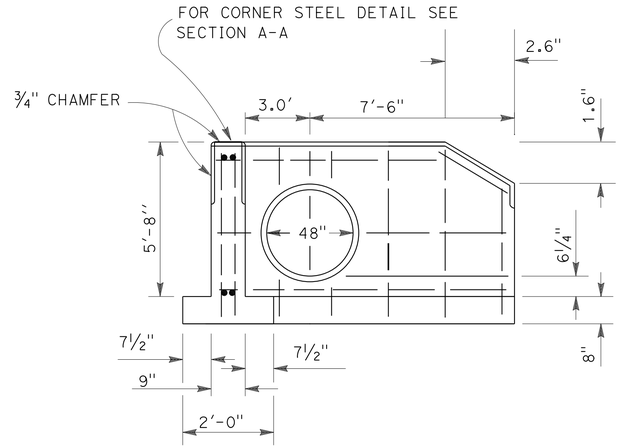

FRONT ELEVATION 48""L" HEADWALL
DRAINAGE SYSTEM (28)
PM 22.97

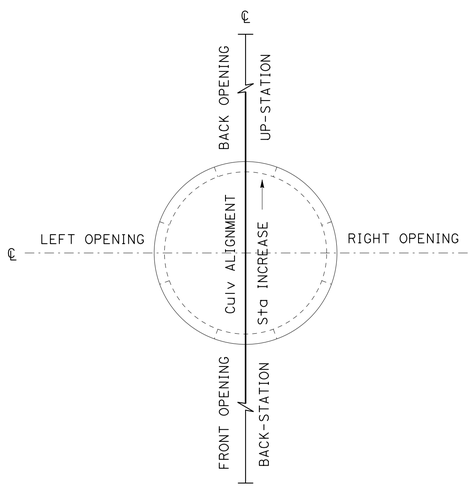

PLAN

INLET (TYPE OMP) SIDE OPENINGS

DRAINAGE SYSTEM No.	OPENINGS				
	PM	BACK	LEFT	RIGHT	FRONT
1	14.30	1	1	1	-

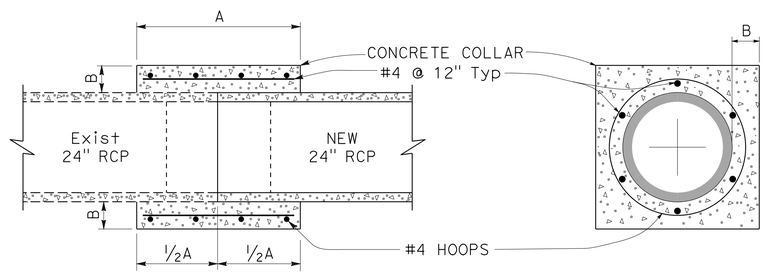

PIPE DIAMETER	A	B	HOOPS
24"	36"	6"	4

REINFORCED CONCRETE COLLAR
DRAINAGE SYSTEM (22)
PM 19.36

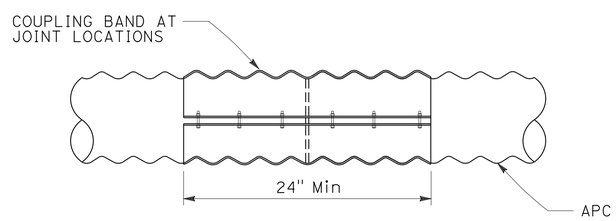

JOINT COUPLING BAND

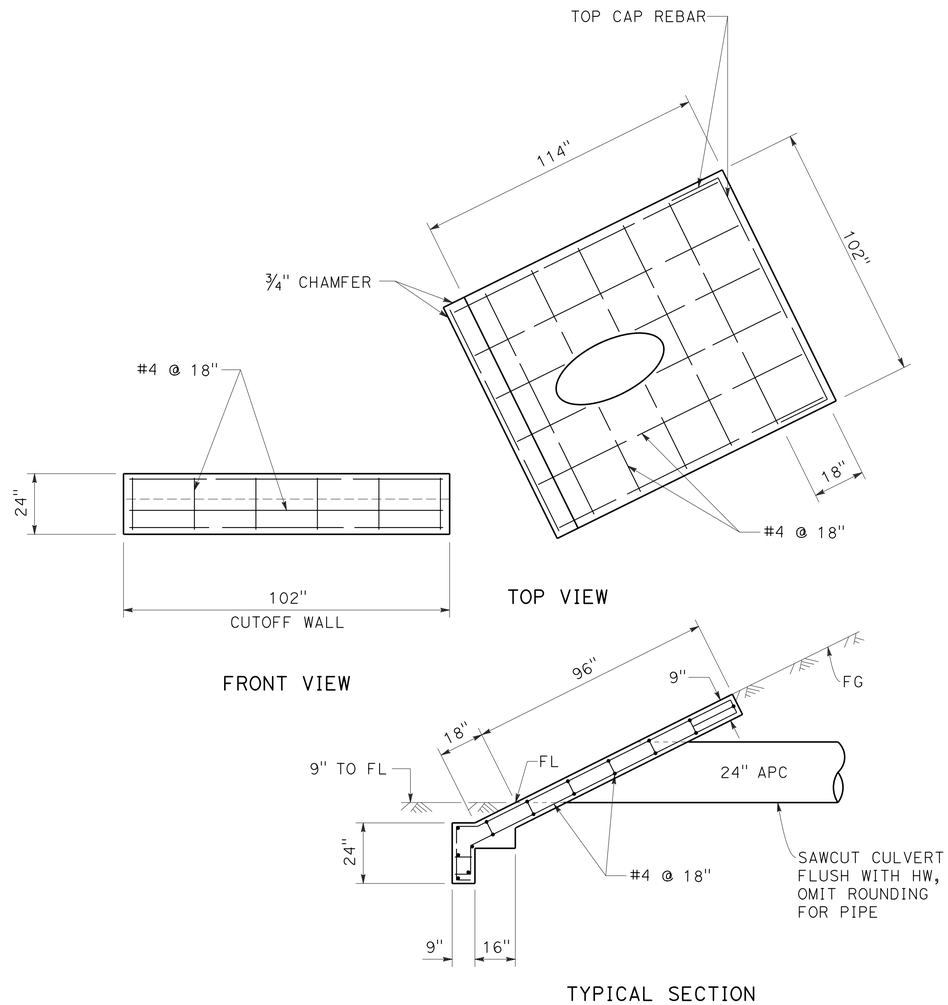

SLOPED HEADWALL
DRAINAGE SYSTEM (32)
PM 30.06

DRAINAGE DETAILS
NO SCALE

DD-4

STATE OF CALIFORNIA - DEPARTMENT OF TRANSPORTATION
Caltrans DIVISION OF ENGINEERING

FUNCTIONAL SUPERVISOR: ROBERT E. POLGAR
CALCULATED-DESIGNED BY: LARISA V. SASEVICH
CHECKED BY: MARTIN GARCIA
REVISED BY / DATE REVISED

LAST REVISION 03-30-11 | DATE PLOTTED => 07-AUG-2013 | TIME PLOTTED => 14:58

Dist	COUNTY	ROUTE	POST MILES TOTAL PROJECT	SHEET No.	TOTAL SHEETS
01	Men	128	Var	63	106

Robert E. Polgar 9-27-11
REGISTERED CIVIL ENGINEER DATE

6-24-13
PLANS APPROVAL DATE

REGISTERED PROFESSIONAL ENGINEER ROBERT E. POLGAR No. 51768 Exp. 6-30-14 CIVIL STATE OF CALIFORNIA

THE STATE OF CALIFORNIA OR ITS OFFICERS OR AGENTS SHALL NOT BE RESPONSIBLE FOR THE ACCURACY OR COMPLETENESS OF SCANNED COPIES OF THIS PLAN SHEET.

NOTE:

1. WELDED STEEL PLATES ARE INCLUDED IN THE PRICE FOR MINOR CONCRETE (MINOR STRUCTURE).

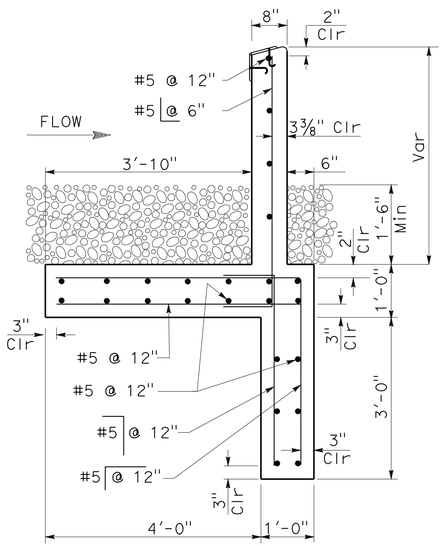

SECTION C-C

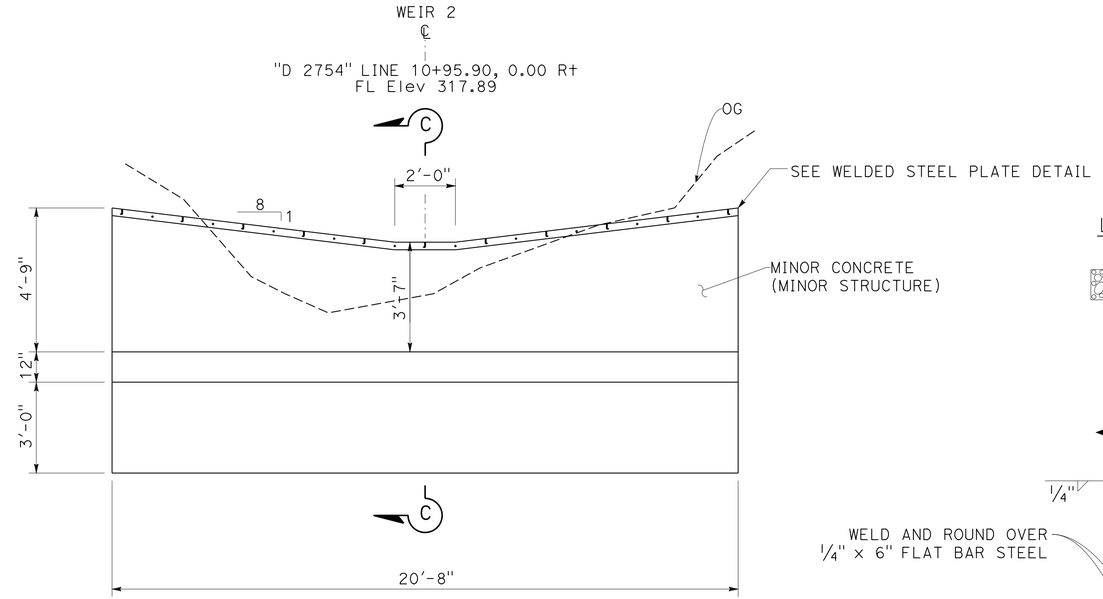

LEGEND:

Exist STREAMBED GRAVEL

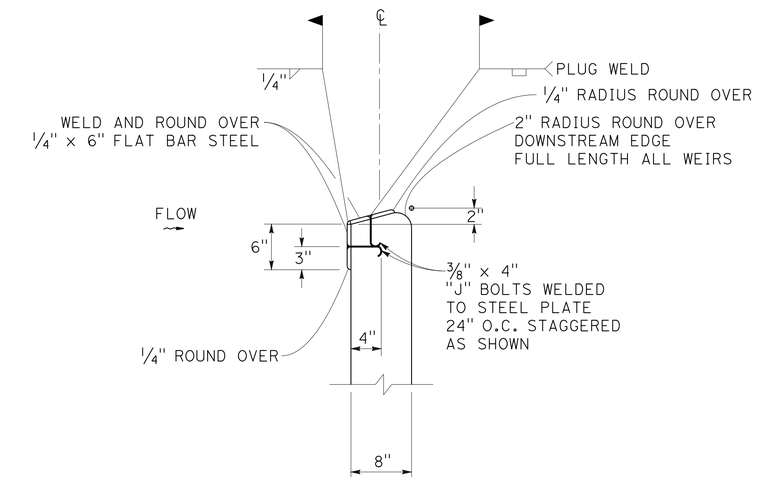

WELDED STEEL PLATE DETAIL

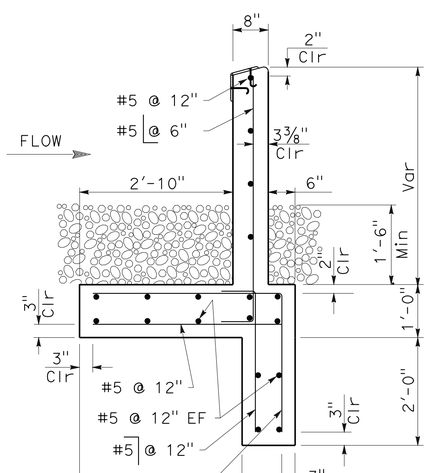

SECTION D-D

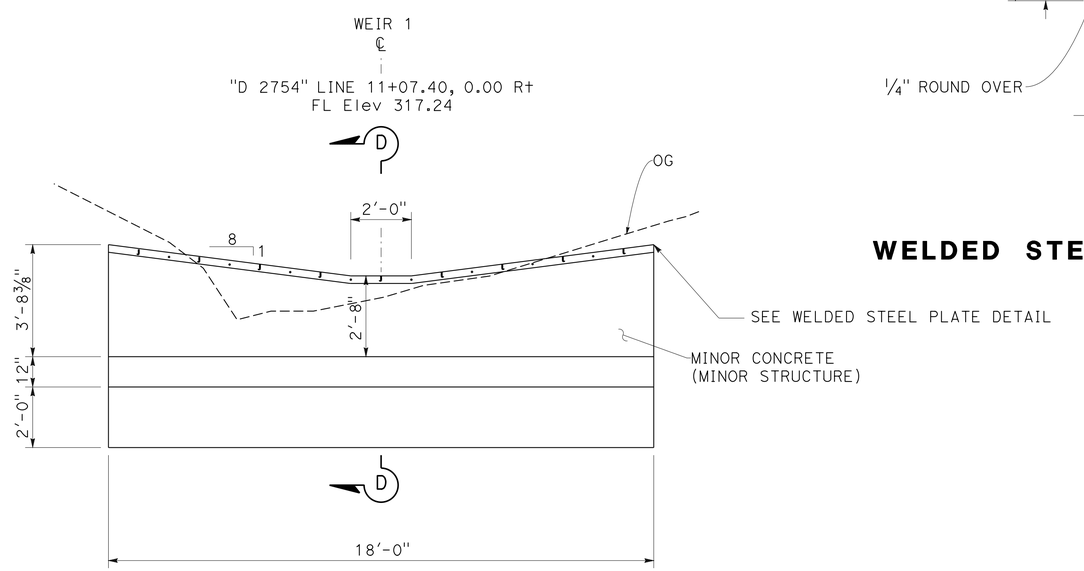

CONCRETE FISH WEIRS

DRAINAGE SYSTEM 31
PM 27.54

DRAINAGE DETAILS

NO SCALE

DD-5

STATE OF CALIFORNIA - DEPARTMENT OF TRANSPORTATION
Caltrans® DIVISION OF ENGINEERING

FUNCTIONAL SUPERVISOR: ROBERT E. POLGAR
CALCULATED-DESIGNED BY: ROBERT E. POLGAR
CHECKED BY: MARTIN GARCIA
REVISED BY
DATE REVISED

LAST REVISION 03-30-11 | DATE PLOTTED => 07-AUG-2013 | TIME PLOTTED => 14:58

Dist	COUNTY	ROUTE	POST MILES TOTAL PROJECT	SHEET No.	TOTAL SHEETS
01	Men	128	Var	64	106

REGISTERED CIVIL ENGINEER 9-27-11 DATE

6-24-13
PLANS APPROVAL DATE

REGISTERED PROFESSIONAL ENGINEER ROBERT E. POLGAR No. 51768 Exp. 6-30-14 CIVIL STATE OF CALIFORNIA

THE STATE OF CALIFORNIA OR ITS OFFICERS OR AGENTS SHALL NOT BE RESPONSIBLE FOR THE ACCURACY OR COMPLETENESS OF SCANNED COPIES OF THIS PLAN SHEET.

NOTE:

1. ALL HARDWARE TO BE GALVANIZED AFTER FABRICATION. ALL PIPE STAKES TO BE EITHER GALVANIZED AFTER FABRICATION, OR BE FABRICATED FROM PRE-GALVANIZED PIPE. IF PRE-GALVANIZED PIPE IS USED, WELD AREAS SHALL BE CLEANED, AND PAINTED WITH ZINC-RICH PRIMER.

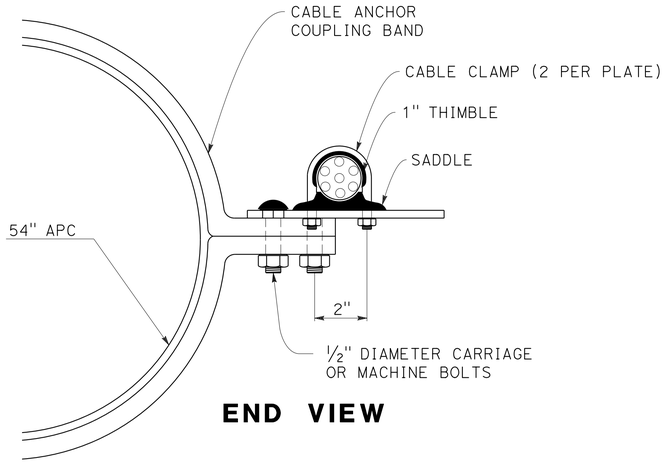

END VIEW

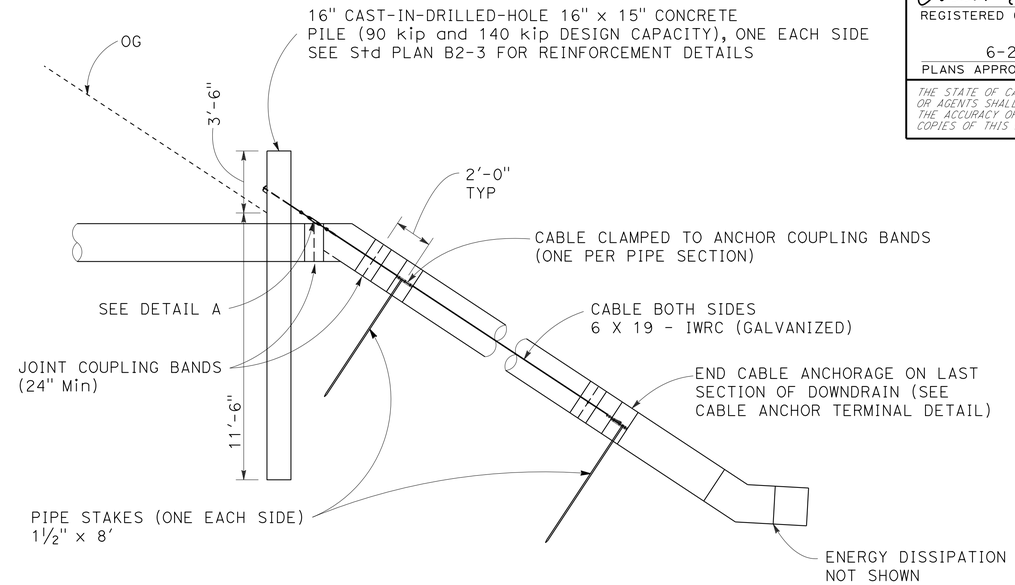

ANCHOR ASSEMBLY SYSTEM WITH CIDH CONCRETE PILES

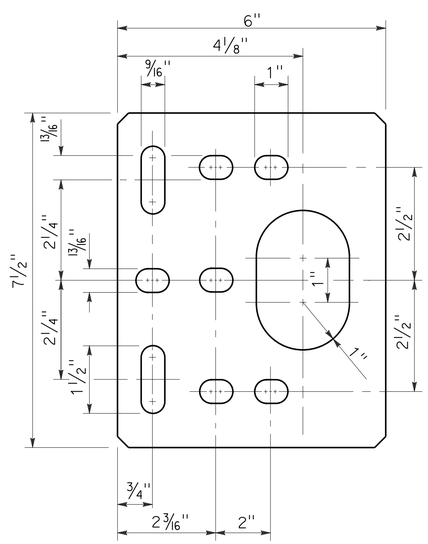

PLATE DETAIL

MATERIAL TO BE ¼" STEEL PLATE
GALVANIZED AFTER FABRICATION

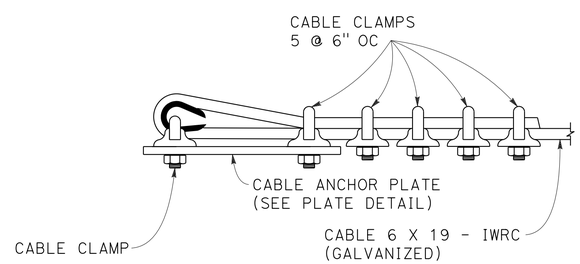

CABLE ANCHOR TERMINAL DETAIL

CABLE SIZE (THIMBLE)	1"
SWL (1000 LBS)	38K
CABLE CLAMP SPACING	6"
CABLE CLAMPS	5
TURBUCKLES	1¼" x 18"

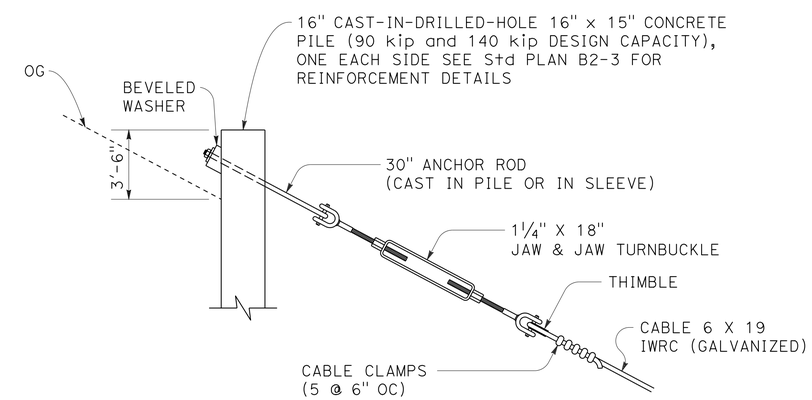

DETAIL A

DRAINAGE DETAILS

NO SCALE

DD-6

STATE OF CALIFORNIA - DEPARTMENT OF TRANSPORTATION
Caltrans® DIVISION OF ENGINEERING
FUNCTIONAL SUPERVISOR: ROBERT E. POLGAR
CALCULATED-DESIGNED BY: ROBERT E. POLGAR
CHECKED BY: MARTIN GARCIA
REVISED BY
DATE REVISED

LAST REVISION 03-30-11
DATE PLOTTED => 07-AUG-2013
TIME PLOTTED => 14:58

Dist	COUNTY	ROUTE	POST MILES TOTAL PROJECT	SHEET No.	TOTAL SHEETS
01	Men	128	Var	65	106

Robert E. Polgar 9-27-11
REGISTERED CIVIL ENGINEER DATE

6-24-13
PLANS APPROVAL DATE

REGISTERED PROFESSIONAL ENGINEER
ROBERT E. POLGAR
No. 51768
Exp. 6-30-14
CIVIL
STATE OF CALIFORNIA

THE STATE OF CALIFORNIA OR ITS OFFICERS OR AGENTS SHALL NOT BE RESPONSIBLE FOR THE ACCURACY OR COMPLETENESS OF SCANNED COPIES OF THIS PLAN SHEET.

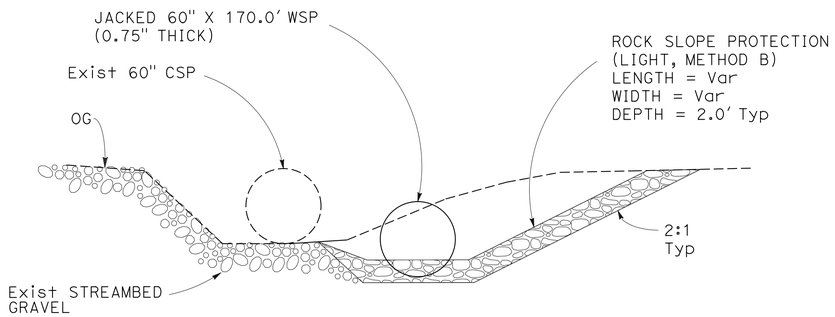

DRAINAGE SYSTEM 25
PM 21.80

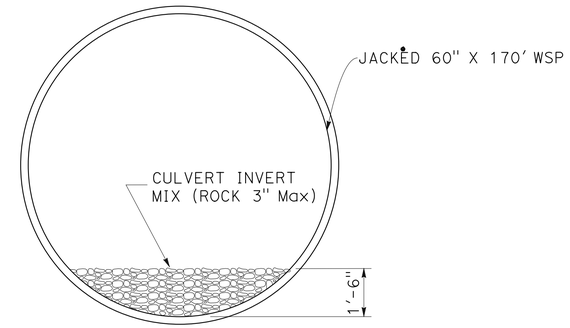

TYPICAL SECTION

CULVERT INVERT MIX

DRAINAGE SYSTEM 25
PM 21.80

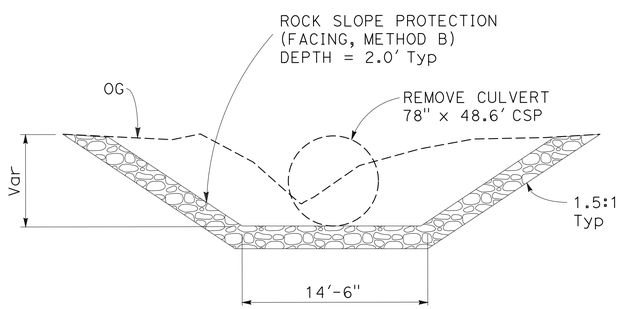

DRAINAGE SYSTEM 31
PM 27.54

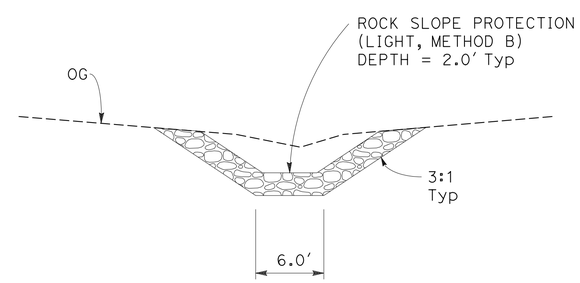

DRAINAGE SYSTEM 36
PM 30.97

DITCH EXCAVATION

TYPICAL SECTION

DRAINAGE DETAILS

NO SCALE

DD-7

STATE OF CALIFORNIA - DEPARTMENT OF TRANSPORTATION
Caltrans® DIVISION OF ENGINEERING

FUNCTIONAL SUPERVISOR: ROBERT E. POLGAR
CALCULATED-DESIGNED BY: ROBERT E. POLGAR
CHECKED BY: MARTIN GARCIA
REVISED BY
DATE REVISED

LAST REVISION 06-23-13
DATE PLOTTED => 07-AUG-2013
TIME PLOTTED => 14:58

Dist	COUNTY	ROUTE	POST MILES TOTAL PROJECT	SHEET No.	TOTAL SHEETS
01	Men	128	Var	66	106

Robert E. Polgar 9-27-11
REGISTERED CIVIL ENGINEER DATE

6-24-13
PLANS APPROVAL DATE

REGISTERED PROFESSIONAL ENGINEER ROBERT E. POLGAR No. 51768 Exp. 6-30-14 CIVIL STATE OF CALIFORNIA

THE STATE OF CALIFORNIA OR ITS OFFICERS OR AGENTS SHALL NOT BE RESPONSIBLE FOR THE ACCURACY OR COMPLETENESS OF SCANNED COPIES OF THIS PLAN SHEET.

NOTES:

1. CONCRETE INVERT PAVING SHALL BE COMPLETED BEFORE ROCK INVERT PAVING.
2. CONTRACTOR SHALL CLEAN THE ENTIRE INTERIOR SURFACE TO BE REPAIRED WITH HIGH PRESSURE WATER JET AND/OR WET SANDBLASTING. SURFACE SHALL BE FREE OF RUST FLAKES TO THE SATISFACTION OF THE ENGINEER.
3. PM 27.54: H4L HEADED STUDS SHALL BE PLACED 6 INCHES ON CENTER TRANSVERSALLY (CIRCUMFERENTIALLY).
   PM 39.88: H4L HEADED STUDS SHALL BE PLACED 5 INCHES ON CENTER TRANSVERSALLY (CIRCUMFERENTIALLY).
4. WELDED WIRE FABRIC (WWF) SHALL BE TIED TO STUDS OR TACK WELDED TO CULVERT.
5. WELDED WIRE FABRIC (WWF) SHALL BE LAPPED 6 INCHES MINIMUM.
6. INVERT PAVING SHALL BE FINISHED TO A SMOOTH SURFACE ACCEPTABLE TO THE ENGINEER
7. ROUND INVERT PAVING WITH 3 INCH RADIUS ON 1:1 BEVEL AT INLET & OUTLET ENDS OF PIPE.
8. CONCRETE SHALL BE CURED IN CONFORMANCE WITH THE PROVISIONS IN SECTION 90-1.03 OF THE STANDARD SPECIFICATIONS.
9. CONCRETE SHALL BE CURED FOR A MINIMUM PERIOD OF 30-DAYS BEFORE ANY WATER IS PERMITTED TO FLOW IN THE INVERT.
10. PM 39.88: APPLY EPOXY TO EXISTING CONCRETE INVERT PAVING BEFORE PLACING NEW CONCRETE INVERT PAVING. USE EPOXY RESIN ADHESIVE FOR BONDING NEW CONCRETE TO OLD CONCRETE.

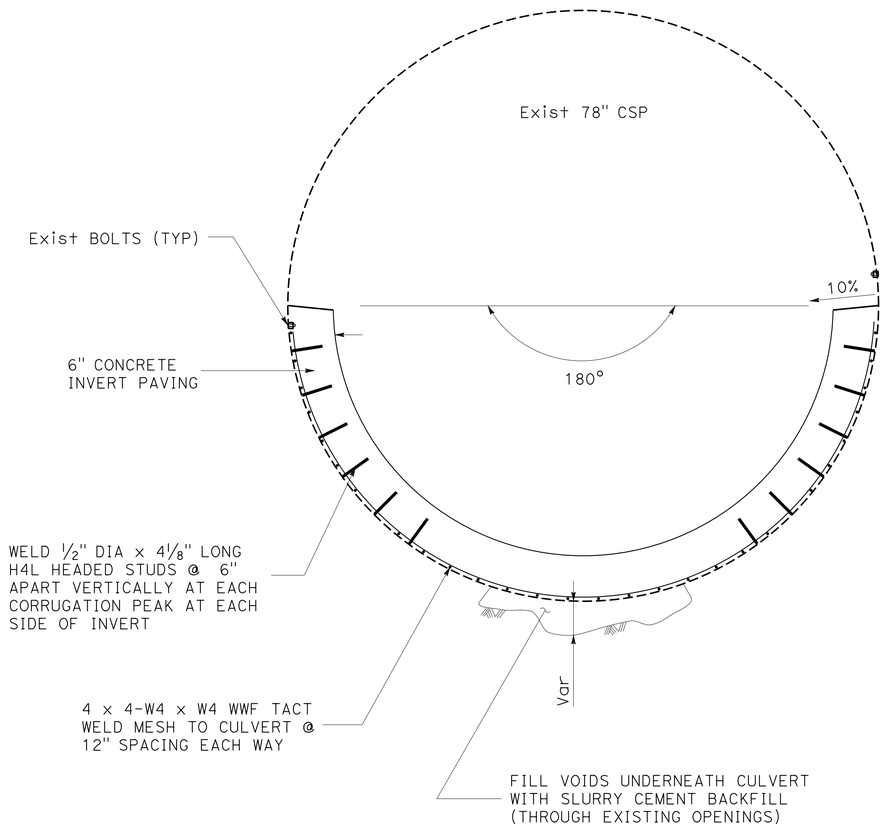

DRAINAGE SYSTEM
PM 27.54

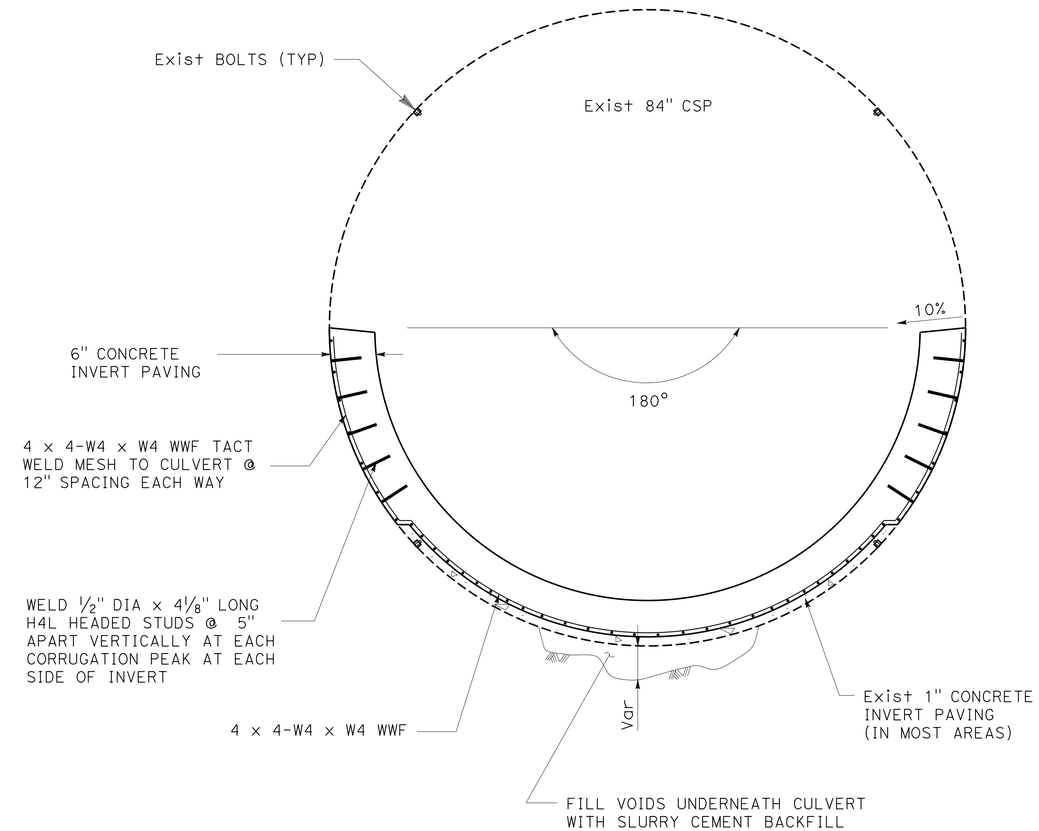

DRAINAGE SYSTEM
PM 39.88

CONCRETE INVERT PAVING

DRAINAGE DETAILS
NO SCALE

DD-8

STATE OF CALIFORNIA - DEPARTMENT OF TRANSPORTATION
Caltrans® DIVISION OF ENGINEERING
FUNCTIONAL SUPERVISOR: ROBERT E. POLGAR
CALCULATED-DESIGNED BY: ROBERT E. POLGAR
CHECKED BY: MARTIN GARCIA
REVISED BY
DATE REVISED

LAST REVISION 03-30-11
DATE PLOTTED => 07-AUG-2013
TIME PLOTTED => 14:58

Dist	COUNTY	ROUTE	POST MILES TOTAL PROJECT	SHEET No.	TOTAL SHEETS
01	Men	128	Var	67	106

REGISTERED CIVIL ENGINEER 9-27-11 DATE

6-24-13
PLANS APPROVAL DATE

REGISTERED PROFESSIONAL ENGINEER ROBERT E. POLGAR No. 51768 Exp. 6-30-14 CIVIL STATE OF CALIFORNIA

THE STATE OF CALIFORNIA OR ITS OFFICERS OR AGENTS SHALL NOT BE RESPONSIBLE FOR THE ACCURACY OR COMPLETENESS OF SCANNED COPIES OF THIS PLAN SHEET.

NOTES:

1. CONCRETE INVERT PAVING SHALL BE COMPLETED BEFORE ROCK INVERT PAVING.

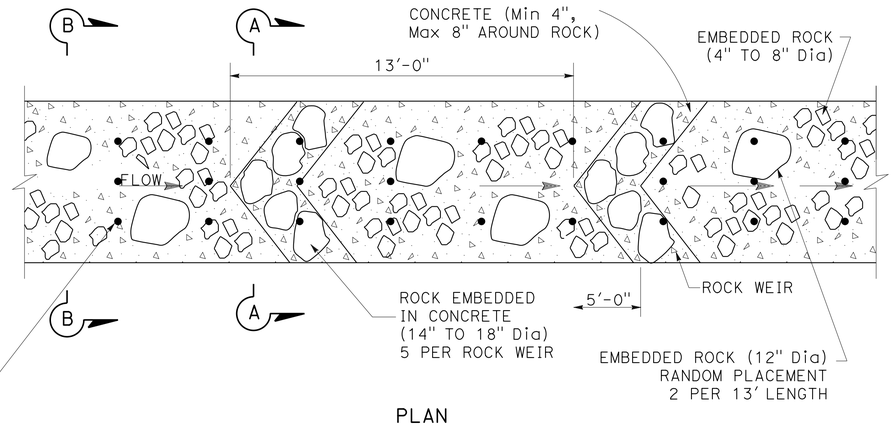

PLAN

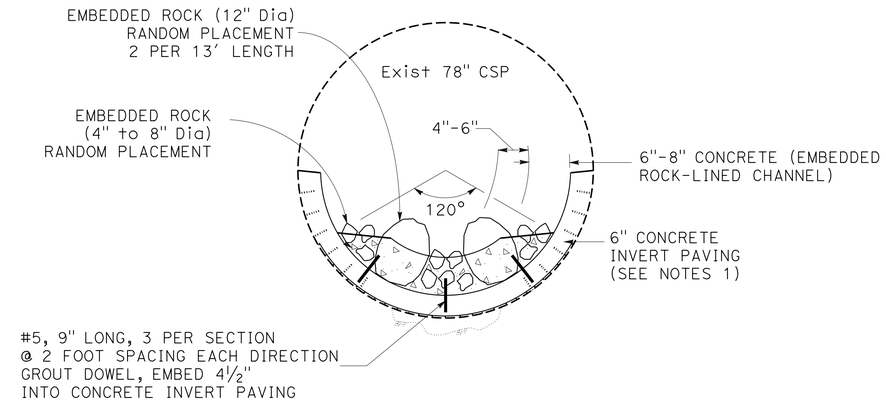

SECTION B-B

#5, 9" LONG, 3 PER SECTION @ 2 FOOT SPACING EACH DIRECTION GROUT DOWEL, EMBED 4½" INTO CONCRETE INVERT PAVING

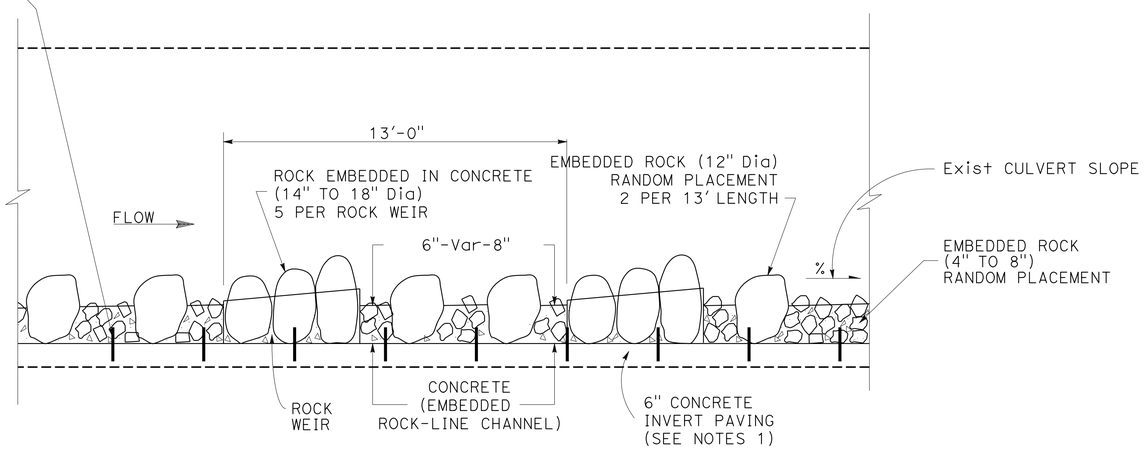

PROFILE

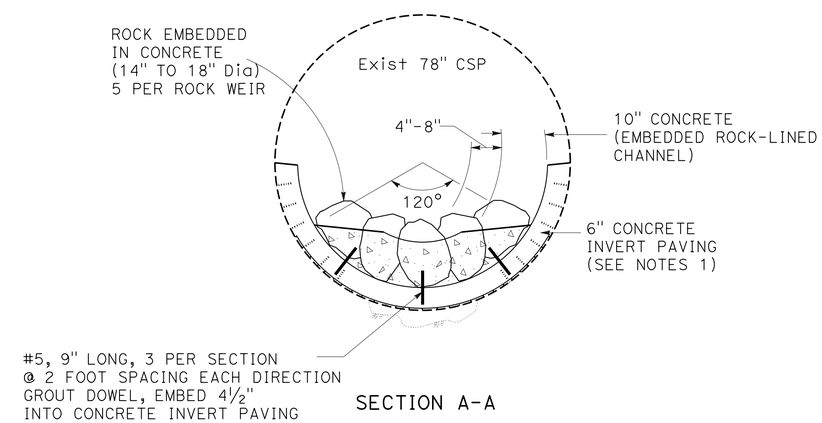

SECTION A-A

ROCK INVERT PAVING

DRAINAGE SYSTEM 31

PM 27.54

DRAINAGE DETAILS

NO SCALE

DD-9

STATE OF CALIFORNIA - DEPARTMENT OF TRANSPORTATION
Caltrans® DIVISION OF ENGINEERING

FUNCTIONAL SUPERVISOR: ROBERT E. POLGAR
CALCULATED-DESIGNED BY: ROBERT E. POLGAR
CHECKED BY: MARTIN GARCIA
REVISED BY
DATE REVISED

LAST REVISION 03-30-11
DATE PLOTTED => 07-AUG-2013
TIME PLOTTED => 14:58

Dist	COUNTY	ROUTE	POST MILES TOTAL PROJECT	SHEET No.	TOTAL SHEETS
01	Men	128	Var	68	106

Robert E. Polgar 9-27-11
REGISTERED CIVIL ENGINEER DATE

6-24-13
PLANS APPROVAL DATE

REGISTERED PROFESSIONAL ENGINEER ROBERT E. POLGAR No. 51768 Exp. 6-30-14 CIVIL STATE OF CALIFORNIA

THE STATE OF CALIFORNIA OR ITS OFFICERS OR AGENTS SHALL NOT BE RESPONSIBLE FOR THE ACCURACY OR COMPLETENESS OF SCANNED COPIES OF THIS PLAN SHEET.

NOTES:

1. CONCRETE INVERT PAVING SHALL BE COMPLETED BEFORE ROCK INVERT PAVING.
2. PM 39.88: APPLY EPOXY TO EXISTING CONCRETE INVERT PAVING BEFORE PLACING NEW CONCRETE INVERT PAVING. USE EPOXY RESIN ADHESIVE FOR BONDING NEW CONCRETE TO OLD CONCRETE.

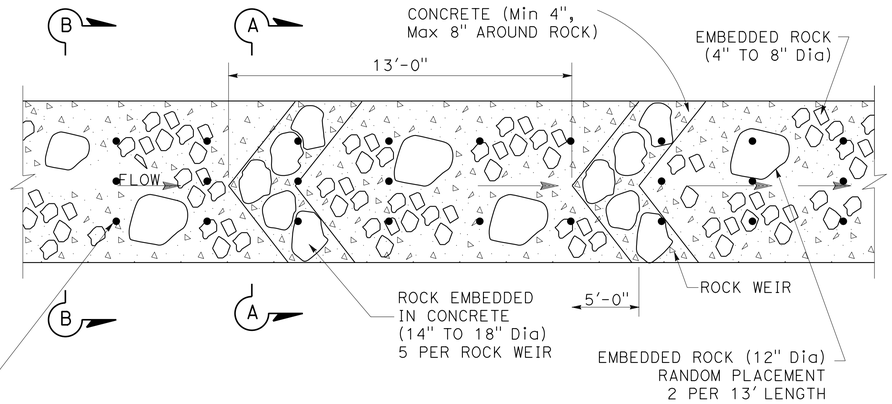

PLAN

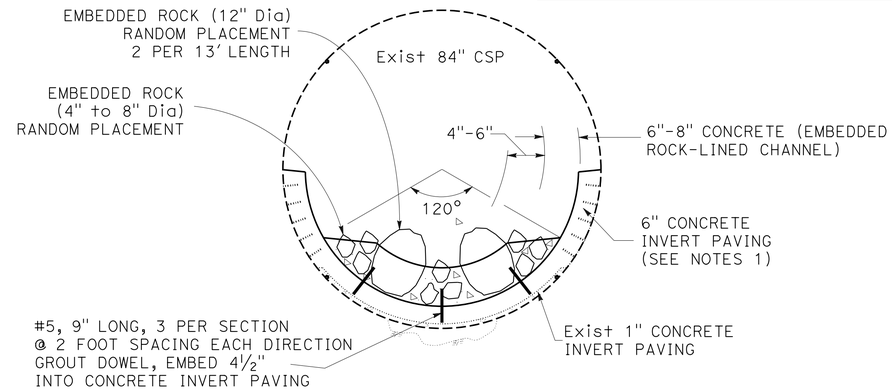

SECTION B-B

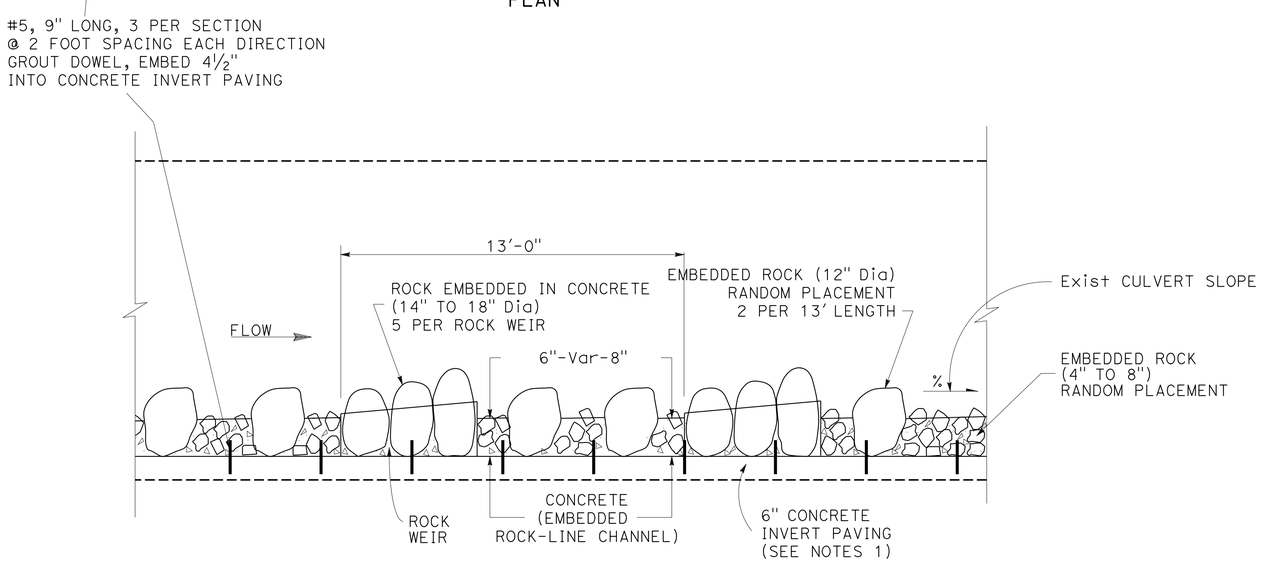

PROFILE

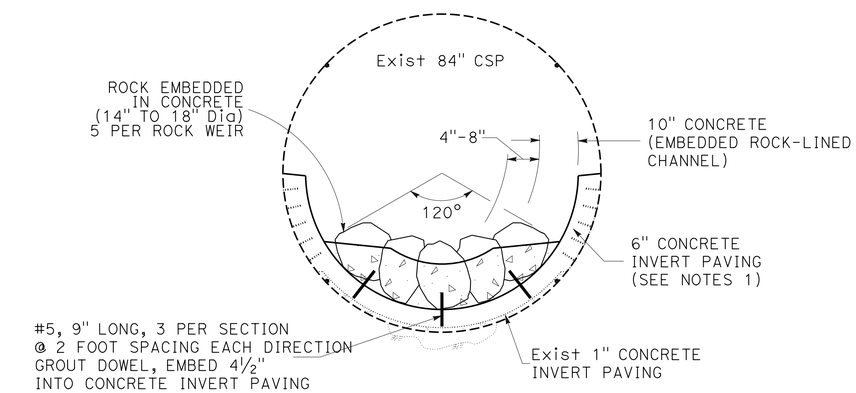

SECTION A-A

ROCK INVERT PAVING

DRAINAGE SYSTEM 48

PM 39.88

DRAINAGE DETAILS

NO SCALE

DD-10

STATE OF CALIFORNIA - DEPARTMENT OF TRANSPORTATION
Caltrans® DIVISION OF ENGINEERING

FUNCTIONAL SUPERVISOR: ROBERT E. POLGAR
CALCULATED-DESIGNED BY: ROBERT E. POLGAR
CHECKED BY: MARTIN GARCIA
REVISED BY
DATE REVISED

LAST REVISION 03-30-11
DATE PLOTTED => 07-AUG-2013
TIME PLOTTED => 14:58

Dist	COUNTY	ROUTE	POST MILES TOTAL PROJECT	SHEET No.	TOTAL SHEETS
01	Men	128	Var	69	106

REGISTERED CIVIL ENGINEER 9-27-11 DATE

6-24-13
PLANS APPROVAL DATE

REGISTERED PROFESSIONAL ENGINEER ROBERT E. POLGAR No. 51768 Exp. 6-30-14 CIVIL STATE OF CALIFORNIA

THE STATE OF CALIFORNIA OR ITS OFFICERS OR AGENTS SHALL NOT BE RESPONSIBLE FOR THE ACCURACY OR COMPLETENESS OF SCANNED COPIES OF THIS PLAN SHEET.

NOTES:

1. CONTRACTOR TO LOCATE REBAR IN THE EXISTING BOX. MOVE DOWELS TO AVOID CUTTING THE EXISTING REBAR.
2. PM 36.63: CLEAN AND ROUGHEN SURFACE PRIOR TO PLACING WEIR BASE. APPLY EPOXY TO EXISTING CONCRETE SURFACE BEFORE PLACING WEIR BASE. USE EPOXY RESIN ADHESIVE FOR BONDING NEW CONCRETE TO OLD CONCRETE.
3. WELDED STEEL PLATES ARE INCLUDED IN THE PRICE FOR MINOR CONCRETE (MINOR STRUCTURE).

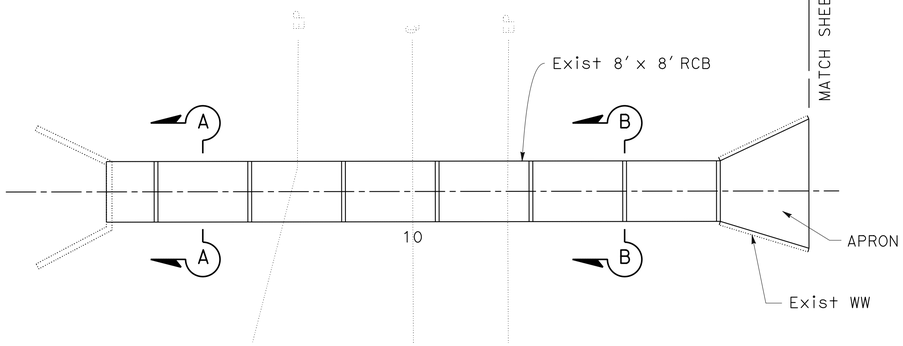

PLAN

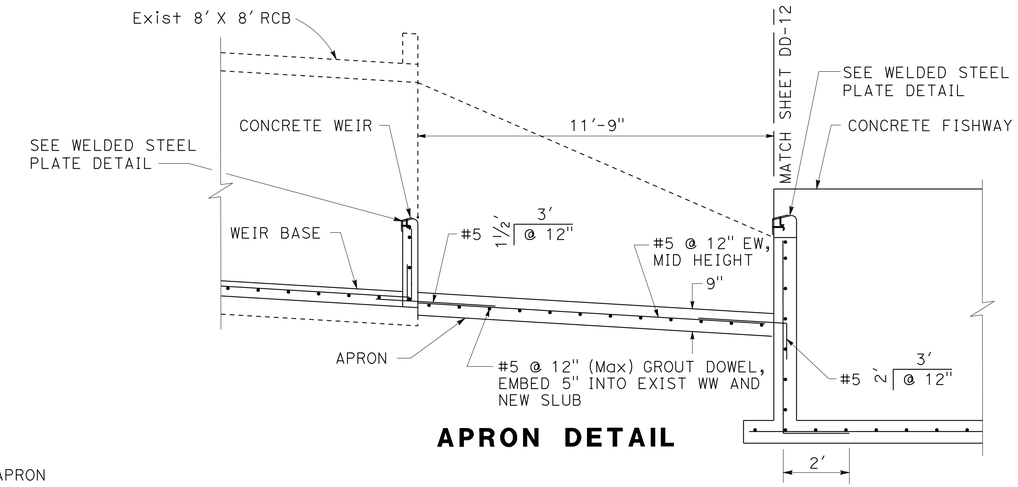

APRON DETAIL

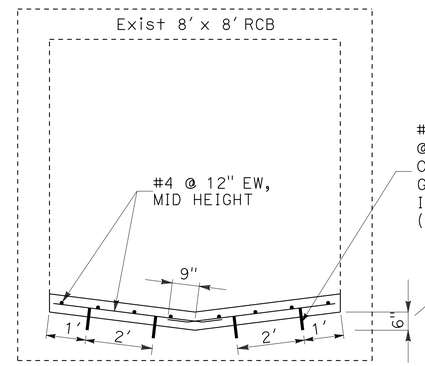

SECTION A-A

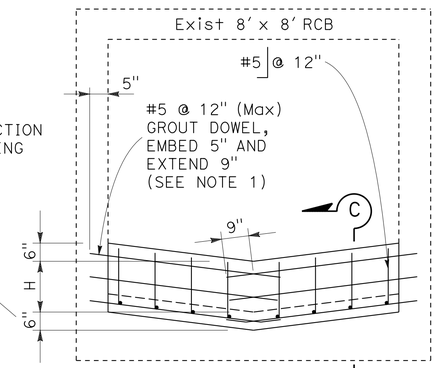

SECTION B-B

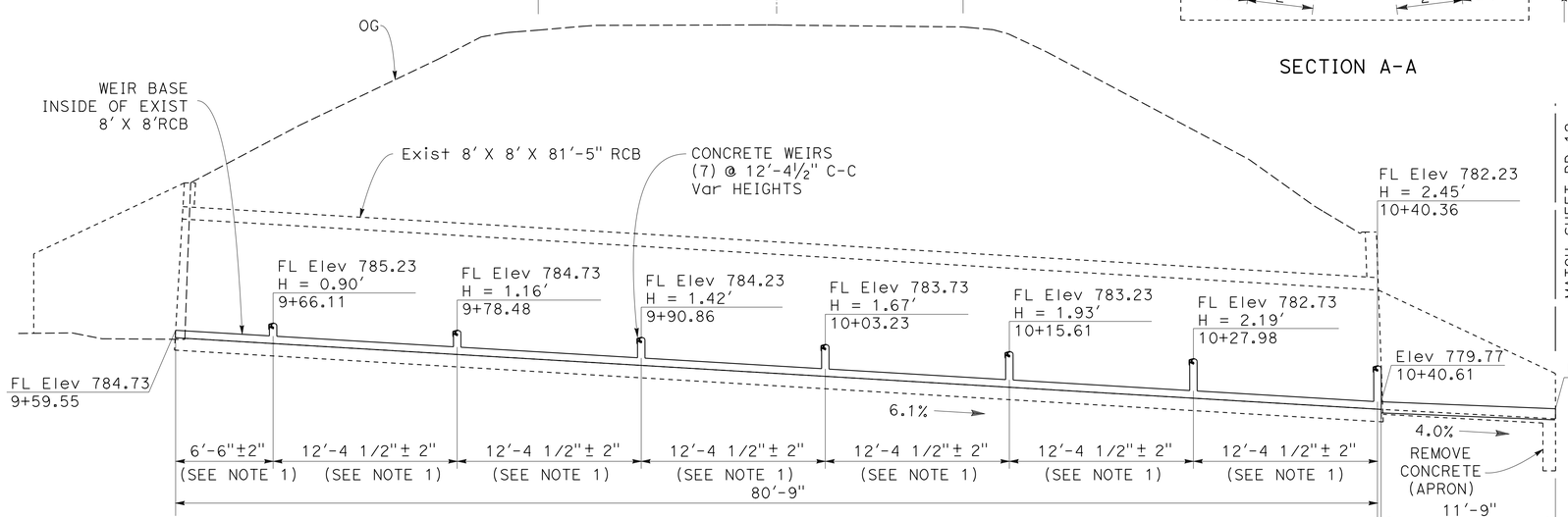

PROFILE

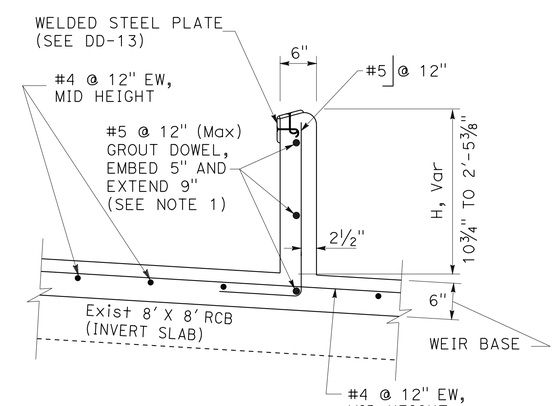

SECTION C-C

CONCRETE WEIR DRAINAGE SYSTEM 44
PM 36.63

DRAINAGE DETAILS
NO SCALE

DD-11

STATE OF CALIFORNIA - DEPARTMENT OF TRANSPORTATION
Caltrans® DIVISION OF ENGINEERING

FUNCTIONAL SUPERVISOR: ROBERT E. POLGAR
CALCULATED-DESIGNED BY: ROBERT E. POLGAR
CHECKED BY: MARTIN GARCIA
REVISED BY
DATE REVISED

LAST REVISION 03-30-11
DATE PLOTTED => 07-AUG-2013
TIME PLOTTED => 14:58

NOTE: 1. WELDED STEEL PLATES ARE INCLUDED IN THE PRICE FOR MINOR CONCRETE (MINOR STRUCTURE).

Dist	COUNTY	ROUTE	POST MILES TOTAL PROJECT	SHEET No.	TOTAL SHEETS
01	Men	128	Var	70	106

Robert E. Polgar 9-27-11
REGISTERED CIVIL ENGINEER DATE

6-24-13
PLANS APPROVAL DATE

REGISTERED PROFESSIONAL ENGINEER ROBERT E. POLGAR No. 51768 Exp. 6-30-14 CIVIL STATE OF CALIFORNIA

THE STATE OF CALIFORNIA OR ITS OFFICERS OR AGENTS SHALL NOT BE RESPONSIBLE FOR THE ACCURACY OR COMPLETENESS OF SCANNED COPIES OF THIS PLAN SHEET.

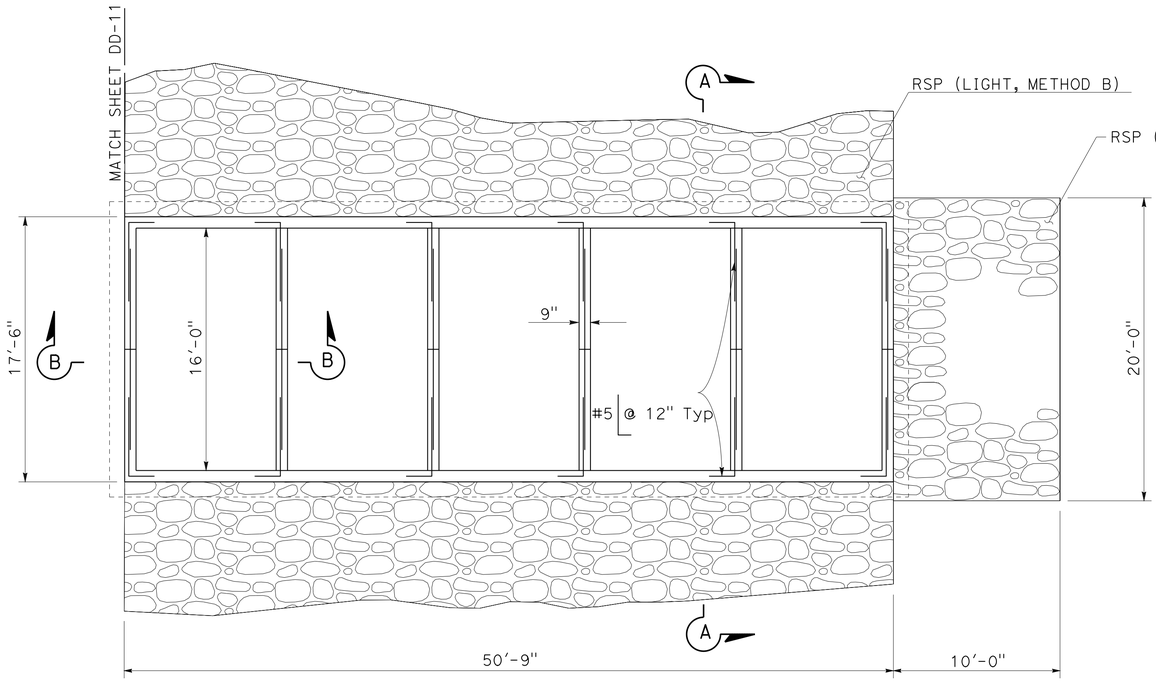

PLAN

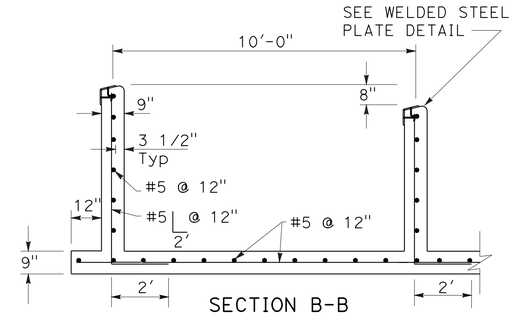

SECTION B-B

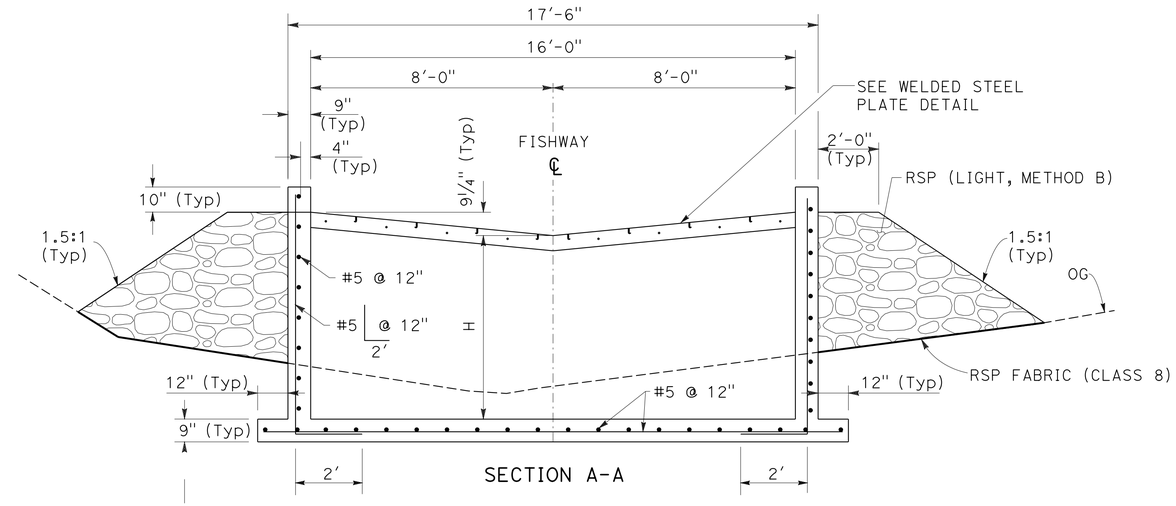

SECTION A-A

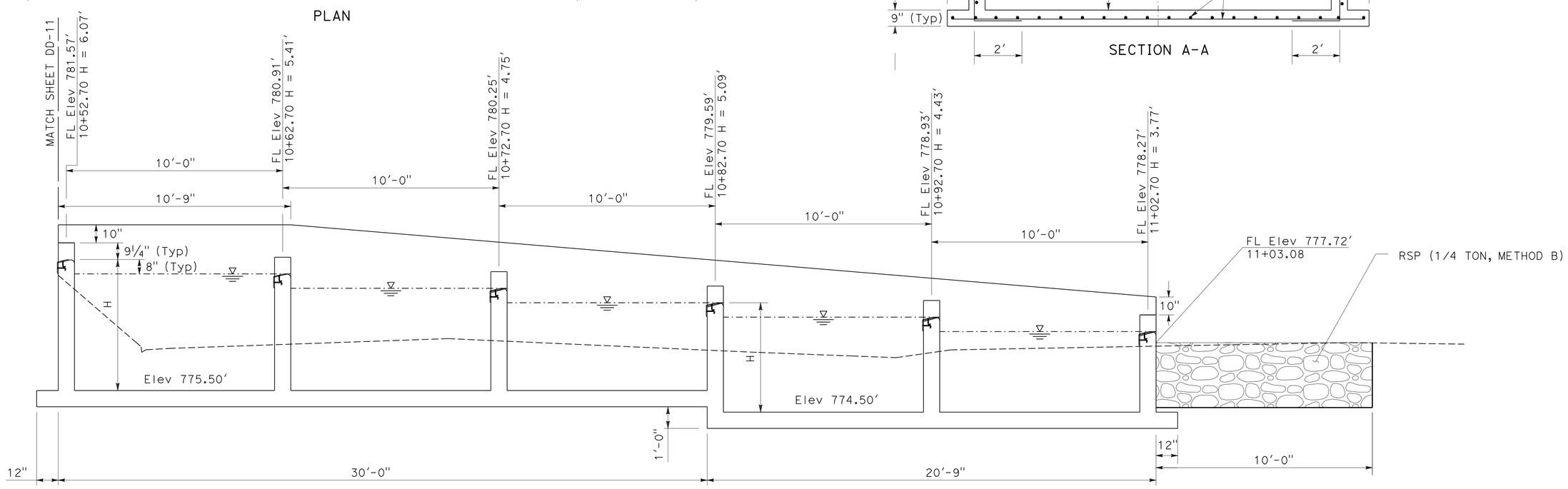

PROFILE

NOTE:
"H" SHALL NOT EXCEED GIVEN DIMENSIONS.

CONCRETE FISHWAY DRAINAGE SYSTEM (44)
PM 36.63

DRAINAGE DETAILS
NO SCALE

DD-12

STATE OF CALIFORNIA - DEPARTMENT OF TRANSPORTATION
Caltrans® DIVISION OF ENGINEERING
FUNCTIONAL SUPERVISOR: ROBERT E. POLGAR
CALCULATED-DESIGNED BY: ROBERT E. POLGAR
CHECKED BY: MARTIN GARCIA
REVISED BY
DATE REVISED

LAST REVISION 03-30-11 DATE PLOTTED => 07-AUG-2013 TIME PLOTTED => 14:58

Dist	COUNTY	ROUTE	POST MILES TOTAL PROJECT	SHEET No.	TOTAL SHEETS
01	Men	128	Var	71	106

Robert E. Polgar 9-27-11
REGISTERED CIVIL ENGINEER DATE

6-24-13
PLANS APPROVAL DATE

REGISTERED PROFESSIONAL ENGINEER ROBERT E. POLGAR No. 51768 Exp. 6-30-14 CIVIL STATE OF CALIFORNIA

THE STATE OF CALIFORNIA OR ITS OFFICERS OR AGENTS SHALL NOT BE RESPONSIBLE FOR THE ACCURACY OR COMPLETENESS OF SCANNED COPIES OF THIS PLAN SHEET.

NOTE:

1. WELDED STEEL PLATES ARE INCLUDED IN THE PRICE FOR MINOR CONCRETE (MINOR STRUCTURE).

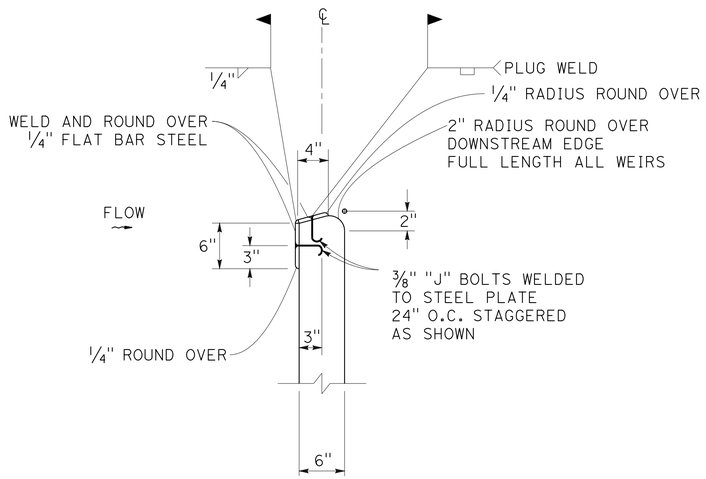

WELDED STEEL PLATE DETAIL
6" WEIR
DRAINAGE SYSTEM (44)
PM 36.63

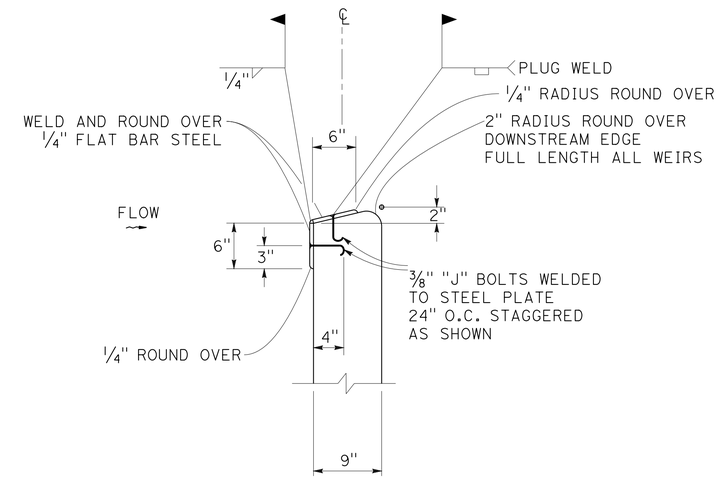

WELDED STEEL PLATE DETAIL
9" WEIR
DRAINAGE SYSTEM (44)
PM 36.63

DRAINAGE DETAILS
NO SCALE

DD-13

STATE OF CALIFORNIA - DEPARTMENT OF TRANSPORTATION
Caltrans DIVISION OF ENGINEERING
FUNCTIONAL SUPERVISOR ROBERT E. POLGAR
CALCULATED-DESIGNED BY ROBERT E. POLGAR
CHECKED BY MARTIN GARCIA
REVISED BY
DATE REVISED

LAST REVISION 03-30-11
DATE PLOTTED => 07-AUG-2013
TIME PLOTTED => 14:58

Dist	COUNTY	ROUTE	POST MILES TOTAL PROJECT	SHEET No.	TOTAL SHEETS
01	Men	128	Var	72	106

Larisa V. Sasevich 9-27-11
REGISTERED CIVIL ENGINEER DATE

6-24-13
PLANS APPROVAL DATE

REGISTERED PROFESSIONAL ENGINEER LARISA V. SASEVICH No. 71520 Exp. 12-31-13 CIVIL STATE OF CALIFORNIA

THE STATE OF CALIFORNIA OR ITS OFFICERS OR AGENTS SHALL NOT BE RESPONSIBLE FOR THE ACCURACY OR COMPLETENESS OF SCANNED COPIES OF THIS PLAN SHEET.

NOTES:

1. DOWNDRAIN AND FLARED END SECTION SHALL BE SAME MATERIAL AS CULVERT.
2. ALL CULVERT PIPE JOINTS ARE POSITIVE JOINT TYPE.
3. THE JOINT CLASSIFICATION FOR DOWNDRAINS SHALL BE DOWNDRAIN.
4. LENGTH OF PIPES AND ANGLES OF ELBOWS SHALL BE VERIFIED IN THE FIELD BY THE CONTRACTOR.
5. FOR MINIMUM ALLOWABLE CLASS OF RCP, SEE STANDARD PLAN A62D & A62DA.

ALTERNATIVE PIPE CULVERT (APC) AND DOWNDRAIN (AP DD) ALLOWABLE PIPE MATERIAL AND PROTECTION

DRAINAGE SYSTEM No.	PM	Galv CSP 0.138" (10 Ga) THICK	Galv CSP 0.169" (8 Ga) THICK	Galv CSP POLYMERIC Sht COATED 0.109" (12 Ga) THICK	Galv CSP POLYMERIC Sht COATED 0.138" (10 Ga) THICK	CAP 0.079" (14 Ga)	RCP
1	14.30			X		X	**
2	14.39	X		X		X	*
3	14.61	X		X		X	*
4	14.67	X		X		X	*
5	14.80	X		X		X	*
6	14.98	X		X		X	*
7	15.14	X		X		X	*
8	15.14DW	X		X		X	*
9	15.62	X		X		X	*
10	15.90	X		X			*
11	16.63			X		X	*
12	16.88			X		X	*
13	16.91	X		X		X	*
14	17.11		X		X	X	*
15	17.22			X		X	*
16	17.51	X		X		X	*
17	OMITTED FROM CONTRACT						
18	18.28						
19	18.46		X		X	X	*
20	18.88			X		X	*
21	19.30			X		X	**
22	19.36(36")	X		X		X	*
22	19.36(24")						*
23	OMITTED FROM CONTRACT						
24	21.23	X		X		X	*
25	21.80						
26	21.96			X		X	*
27	22.83	X		X		X	*
28	22.97		X		X	X	*

DRAINAGE SYSTEM No.	PM	Galv CSP 0.138" (10 Ga) THICK	Galv CSP 0.169" (8 Ga) THICK	Galv CSP POLYMERIC Sht COATED 0.109" (12 Ga) THICK	Galv CSP POLYMERIC Sht COATED 0.138" (10 Ga) THICK	CAP 0.079" (14 Ga)	RCP
29	23.75	X		X		X	*
30	24.55	X		X		X	*
31	27.54						
32	30.06	X		X		X	*
33	30.75	X		X		X	*
34	30.82	X		X		X	*
35	30.94	X		X			
36	30.97						
37	31.84	X		X		X	**
38	31.86	X		X		X	*
39	32.01	X		X		X	*
40	33.23	X		X			
41	33.70	X		X			
42	33.78		X		X		
43	36.01			X		X	*
44	36.63						
45	OMITTED FROM CONTRACT						
46	39.22	X		X		X	*
47	39.28	X		X		X	*
48	39.88						
49	40.24	X		X		X	*
50	40.63			X		X	*
51	41.38	X		X		X	*
52	45.21						*
53	45.25						*
54	OMITTED FROM CONTRACT						
55	45.91			X		X	*
56	49.28	X		X			

* - TYPE IP (MS) MODIFIED CEMENT OR TYPE II MODIFIED CEMENT.
** - TYPE II MODIFIED CEMENT OR TYPE V CEMENT 675 lb/cy WITH 25% MINERAL ADMIXTURE REPLACEMENT (BY WEIGHT). MAXIMUM WATER-TO-CEMENTITIOUS MATERIAL RATIO OF 0.40.

DRAINAGE QUANTITIES

DQ-1

STATE OF CALIFORNIA - DEPARTMENT OF TRANSPORTATION
Caltrans® DIVISION OF ENGINEERING

FUNCTIONAL SUPERVISOR: ROBERT E. POLGAR
CALCULATED-DESIGNED BY: LARISA V. SASEVICH
CHECKED BY: STEVE D. PENDLEY
REVISED BY / DATE REVISED

LAST REVISION 06-22-12
DATE PLOTTED => 07-AUG-2013
TIME PLOTTED => 14:58

Dist	COUNTY	ROUTE	POST MILES TOTAL PROJECT	SHEET No.	TOTAL SHEETS
01	Men	128	Var	73	106

Larisa V. Sasevich 9-27-11
REGISTERED CIVIL ENGINEER DATE

6-24-13
PLANS APPROVAL DATE

REGISTERED PROFESSIONAL ENGINEER LARISA V. SASEVICH No. 71520 Exp. 12-31-13 CIVIL STATE OF CALIFORNIA

THE STATE OF CALIFORNIA OR ITS OFFICERS OR AGENTS SHALL NOT BE RESPONSIBLE FOR THE ACCURACY OR COMPLETENESS OF SCANNED COPIES OF THIS PLAN SHEET.

DRAINAGE QUANTITIES

DRAINAGE SYSTEM No.	DRAINAGE UNIT	ROUTE	PM	REMOVE INLET EA	REMOVE Culv EA	REMOVE DD EA	REMOVE HW EA	REMOVE FES EA	REMOVE PIPE LF	REMOVE CONCRETE CY	ABANDON Culv EA	SAND BACKFILL CY	APC 18" LF	APC 24" LF	APC 30" LF	APC 36" LF	APC 48" LF	APC 54" LF	8" PSP UNDERDRAIN LF	24" JACKED WSP LF	60" JACKED WSP LF	24" AP DD LF	54" AP DD LF	AFES 24" EA	AFES 30" EA	AFES 36" EA	(N) APC ELBOW EA	24" ANCHOR ASSEMBLY EA	ANCHOR ASSEMBLY SYSTEM EA	RSP (METHOD B) FACING CY	RSP (METHOD B) (LIGHT) CY	RSP (METHOD B) (1/4 TON) CY	RSP (METHOD B) (1 TON) CY	RSP (METHOD B) FABRIC (CLASS 8) SQYD	(N) H OF INLET FT	MINOR CONCRETE (MINOR STRUCTURE) CY	CONCRETED RSP (FACING, METHOD A) CY	CONCRETE INVERT PAVING LF	ROCK INVERT PAVING LF	CULVERT INVERT MIX CY	STRUCTURAL Conc CY	Misc IRON AND STEEL LB	BAR Reinf STEEL LB	(N) Max COVER FT	MARKER (Culv) EA	DESCRIPTION	DRAINAGE UNIT	DRAINAGE SYSTEM No.
1	a	128	14.30		1																																								REMOVE Culv (18" x 72.0' CSP)	a	1
	b						1																																						REMOVE HW	b	
	c			1																																									REMOVE INLET	c	
	d													71.1																													5.33	2	24" APC	d	
	e																																	3.5	0.47						215				TYPE OMP (Mod) DI	e	
	f																																	4.5	0.91						177				TYPE GCP (Mod) DI WITH 1/4" CHECKERED	f	
																																													PLATE COVER		
2	a	128	14.39		1																																								REMOVE Culv (24" x 53.1' CSP)	a	2
	b						1																																						REMOVE HW	b	
	c													52.9																													3.63	2	24" APC	c	
	d																																		1.51										24" "L" HW	d	
3	a	128	14.61		1																																								REMOVE Culv (24" x 44.3' CSP)	a	3
	b						1																																						REMOVE HW	b	
	c													44.7																													1.79	2	24" APC	c	
	d																																		1.51										24" "L" HW	d	
4	a	128	14.67		1																																								REMOVE Culv (24" x 39.4' CSP)	a	4
	b													41.3																													4.18	2	24" APC	b	
	c			1																																									REMOVE INLET	c	
	d																																	4.6	1.63						239				TYPE GO DI WITH 24-12X GRATE	d	
5	a	128	14.80		1																																								REMOVE Culv (36" x 63.5' CSP)	a	5
	b															63.5																											10.65	2	36" APC	b	
	c						1																																						REMOVE HW	c	
	d																																		1.95										36" HW	d	
6	a	128	14.98		1																																								REMOVE Culv (24" x 54.5' CSP)	a	6
	b						1																																						REMOVE HW	b	
	c													56.8																													4.06	2	24" APC	c	
	d																																		1.20										24" HW	d	
7	a	128	15.14		1																																								REMOVE Culv (18" x 50.9' CSP)	a	7
	b						1																																						REMOVE HW	b	
	c													51.1																													4.70	2	24" APC	c	
	d																																		1.20										24" HW	d	
8	a	128	15.14		1																																								REMOVE Culv (24" x 146' CSP)	a	8
	b															143.1																											4.63	2	36" APC	b	
	c																									1																			36" AFES	c	
	d																																		1.95										36" HW	d	
SHEET TOTALS				2	8	-	6	-	-	-	-	-	-	317.9	-	206.6	-	-	-	-	-	-	-	-	-	-	1		-	-	-	-	-	-	-		12.33	-	-	-	-	-	631	-		16			

(N) = NOT A SEPARATE PAY ITEM, FOR INFORMATION ONLY.

DRAINAGE QUANTITIES
DQ-2

STATE OF CALIFORNIA - DEPARTMENT OF TRANSPORTATION
Caltrans® DIVISION OF ENGINEERING

LARISA V. SASEVICH — STEVE D. PENDLEY — REVISED BY — DATE REVISED
CALCULATED-DESIGNED BY — CHECKED BY
FUNCTIONAL SUPERVISOR — ROBERT E. POLGAR

LAST REVISION 06-22-13 — DATE PLOTTED => 07-AUG-2013 — TIME PLOTTED => 14:58

Dist	COUNTY	ROUTE	POST MILES TOTAL PROJECT	SHEET No.	TOTAL SHEETS
01	Men	128	Var	74	106

Larisa V. Sasevich 9-27-11
REGISTERED CIVIL ENGINEER DATE

6-24-13
PLANS APPROVAL DATE

REGISTERED PROFESSIONAL ENGINEER
LARISA V. SASEVICH
No. 71520
Exp. 12-31-13
CIVIL
STATE OF CALIFORNIA

THE STATE OF CALIFORNIA OR ITS OFFICERS OR AGENTS SHALL NOT BE RESPONSIBLE FOR THE ACCURACY OR COMPLETENESS OF SCANNED COPIES OF THIS PLAN SHEET.

DRAINAGE QUANTITIES

DRAINAGE SYSTEM No.	DRAINAGE UNIT	ROUTE	PM	REMOVE INLET EA	REMOVE Culv EA	REMOVE DD EA	REMOVE HW EA	REMOVE FES EA	REMOVE PIPE LF	REMOVE CONCRETE CY	ABANDON Culv EA	SAND BACKFILL CY	APC 18" LF	APC 24" LF	APC 30" LF	APC 36" LF	APC 48" LF	APC 54" LF	8" PSP UNDERDRAIN LF	24" JACKED WSP LF	60" JACKED WSP LF	24" AP DD LF	54" AP DD LF	AFES 24" EA	AFES 30" EA	AFES 36" EA	(N) APC ELBOW EA	24" ANCHOR ASSEMBLY EA	ANCHOR ASSEMBLY SYSTEM EA	RSP (METHOD B) FACING CY	RSP (METHOD B) (LIGHT) CY	RSP (METHOD B) (1/4 TON) CY	RSP (METHOD B) (1 TON) CY	RSP (METHOD B) FABRIC (CLASS 8) SQYD	(N) H OF INLET FT	MINOR CONCRETE (MINOR STRUCTURE) CY	CONCRETED RSP (FACING, METHOD A) CY	CONCRETE INVERT PAVING LF	ROCK INVERT PAVING LF	CULVERT INVERT MIX CY	STRUCTURAL Conc CY	Misc IRON AND STEEL LB	BAR Reinf STEEL LB	(N) Max COVER FT	MARKER (Culv) EA	DESCRIPTION	DRAINAGE UNIT	DRAINAGE SYSTEM No.
9	a	128	15.62		1																																									REMOVE Culv (24" x 55.3' CSP)	a	9
	b						1																																							REMOVE HW	b	
	c													56.6																														5.36	2	24" APC	c	
	d																																			1.20										24" HW	d	
	e																														1.8			7.1											RSP (LIGHT, METHOD B)	e	
	f																														4.0			12.7											RSP (LIGHT, METHOD B)	f	
10	a	128	15.90		1																																									REMOVE Culv (36" x 54.2' CSP)	a	10
	b						1																																							REMOVE HW	b	
	c															56.4																												3.90	2	36" APC	c	
	d																																			1.95										36" HW	d	
	e																													2.4				8.8											RSP (FACING, METHOD B)	e	
11	a	128	16.63								1	3.40																																		ABANDON Culv (18" x 52.0' CSP)	a	11
	b						1																																							REMOVE HW	b	
	c				1																																									REMOVE Culv (18" x 28.0' APC)	c	
	d													84.0																												12.37	2	24" APC	d	
	e																																			1.20										24" HW	e	
12	a	128	16.88		1																																									REMOVE Culv (24" x 70.5' CSP)	a	12
	b						1																																							REMOVE HW	b	
	c													68.4																													7.70	2	24" APC	c	
	d																																			1.20										24" HW	d	
	e																														5.4			14.9											RSP (LIGHT, METHOD B)	e	
13	a	128	16.91		1																																									REMOVE Culv (18" x 55.8' CSP)	a	13
	b						1																																							REMOVE HW	b	
	c													58.6																													5.16	2	24" APC	c	
	d																																			1.20										24" HW	d	
14	a	128	17.11				1																																							REMOVE HW	a	14
	b				1																																									REMOVE Culv (60" x 48.7' CSP)	b	
	c																66.8																										3.35	2	48" APC	c	
	d																66.8																												48" APC	d	
	e																																			3.64										48" Dbl HW (Mod)	e	
	f																																			3.64										48" Dbl HW (Mod)	f	
	g																														33.8			69.8											RSP (LIGHT, METHOD B)	g	
SHEET TOTALS				-	6	-	6	-	-	-	1	3.40	-	267.6	-	56.4	133.6	-	-	-	-	-	-	-	-	-		-	-	2.4	45.0	-	-	113.3		14.03	-	-	-	-	-	-	-		12			

(N) = NOT A SEPARATE PAY ITEM, FOR INFORMATION ONLY.

STATE OF CALIFORNIA - DEPARTMENT OF TRANSPORTATION
Caltrans
DIVISION OF ENGINEERING

FUNCTIONAL SUPERVISOR: ROBERT E. POLGAR
CALCULATED-DESIGNED BY: LARISA V. SASEVICH
CHECKED BY: STEVE D. PENDLEY
REVISED BY
DATE REVISED

LAST REVISION 06-22-13
DATE PLOTTED => 07-AUG-2013
TIME PLOTTED => 14:58

DRAINAGE QUANTITIES

DQ-3

Dist	COUNTY	ROUTE	POST MILES TOTAL PROJECT	SHEET No.	TOTAL SHEETS
01	Men	128	Var	75	106

Larisa V. Sasevich 9-27-11
REGISTERED CIVIL ENGINEER DATE

6-24-13
PLANS APPROVAL DATE

REGISTERED PROFESSIONAL ENGINEER LARISA V. SASEVICH No. 71520 Exp. 12-31-13 CIVIL STATE OF CALIFORNIA

THE STATE OF CALIFORNIA OR ITS OFFICERS OR AGENTS SHALL NOT BE RESPONSIBLE FOR THE ACCURACY OR COMPLETENESS OF SCANNED COPIES OF THIS PLAN SHEET.

DRAINAGE QUANTITIES

DRAINAGE SYSTEM No.	DRAINAGE UNIT	ROUTE	PM	REMOVE INLET EA	REMOVE Culv EA	REMOVE DD EA	REMOVE HW EA	REMOVE FES EA	REMOVE PIPE LF	REMOVE CONCRETE CY	ABANDON Culv EA	SAND BACKFILL CY	APC 18" LF	APC 24" LF	APC 30" LF	APC 36" LF	APC 48" LF	APC 54" LF	8" PSP UNDERDRAIN LF	24" JACKED WSP LF	60" JACKED WSP LF	24" AP DD LF	54" AP DD LF	AFES 24" EA	AFES 30" EA	AFES 36" EA	(N) APC ELBOW EA	24" ANCHOR ASSEMBLY EA	ANCHOR ASSEMBLY SYSTEM EA	RSP (METHOD B) FACING CY	RSP (METHOD B) (LIGHT) CY	RSP (METHOD B) (1/4 TON) CY	RSP (METHOD B) (1 TON) CY	RSP (METHOD B) FABRIC (CLASS 8) SQYD	(N) H OF INLET FT	MINOR CONCRETE (MINOR STRUCTURE) CY	CONCRETED RSP (FACING, METHOD A) CY	CONCRETE INVERT PAVING LF	ROCK INVERT PAVING LF	CULVERT INVERT MIX CY	STRUCTURAL Conc CY	Misc IRON AND STEEL LB	BAR Reinf STEEL LB	(N) Max COVER FT	MARKER (Culv) EA	DESCRIPTION	DRAINAGE UNIT	DRAINAGE SYSTEM No.
15	a	128	17.22		1																																								REMOVE Culv (18" x 64.0' CSP)	a	15
	b						1																																						REMOVE HW	b	
	c													66.9																													4.21	2	24" APC	c	
	d																																			1.20									24" HW	d	
16	a	128	17.51								1	19.36																																	ABANDON Culv (30" x 114.6' CSP)	a	16
	b						1																																						REMOVE HW	b	
	c															106.5																											10.31	2	36" APC	c	
	d																																			1.95									36" HW	d	
	e																															28.5		53.5											RSP (1/4 TON, METHOD B)	e	
	f				1																																								REMOVE Culv (30" x 6.8' CSP)	f	
	g				1																																								REMOVE Culv (30" x 8.1' CSP)	g	
17																																													OMITTED FROM CONTRACT		17
18	a	128	18.28								1	9.81																																	ABANDON Culv (24" x 84.3' CSP)	a	18
	b				1																																								REMOVE Culv (24" x 25.0' CSP)	b	
	c						1																																			14.11	2	REMOVE HW	c	
	d																			105.7																									JACKED 24" X 105.7' WSP	d	
	e																																			1.20									24" HW	e	
	f																														4.4			13.8											RSP (LIGHT, METHOD B)	f	
19	a	128	18.46		1																																								REMOVE Culv (48" x 50.9' CSP)	a	19
	b																50.9																									3.63	2	48" x 50.9' APC	b	
	c						1																																						REMOVE HW	c	
	d																																			2.75									48" HW	d	
	e						1																																						REMOVE HW	e	
	f																																			2.75									48" HW	f	
20	a	128	18.88		1																																								REMOVE Culv (18" x 25.0' CSP)	a	20
	b										1	2.42																																	ABANDON Culv (18" x 47.4' CSP)	b	
	c						1																																						REMOVE HW	c	
	d													53.2																													6.65	2	24" APC	d	
	e																																			1.20									24" HW	e	
	f																															16.7		37.3											RSP (1/4 TON, METHOD B)	f	
21	a	128	19.30		1																																								REMOVE Culv (30" x 54.1' CSP)	a	21
	b														54.7																												2.45	2	30" APC	b	
	c																														3.3			11.0											RSP (LIGHT, METHOD B)	c	
SHEET TOTALS				-	7	-	6	-	-	-	3	31.59	-	120.1	54.7	106.5	50.9	-	-	105.7	-	-	-	-	-	-		-	-	-	7.7	45.2	-	115.6		11.05	-	-	-	-	-	-	-		12			

(N) = NOT A SEPARATE PAY ITEM, FOR INFORMATION ONLY.

STATE OF CALIFORNIA - DEPARTMENT OF TRANSPORTATION
Caltrans® DIVISION OF ENGINEERING

LARISA V. SASEVICH — REVISED BY
STEVE D. PENDLEY — DATE REVISED
CALCULATED-DESIGNED BY
CHECKED BY
FUNCTIONAL SUPERVISOR
ROBERT E. POLGAR

DRAINAGE QUANTITIES

DQ-4

LAST REVISION 06-22-13 | DATE PLOTTED => 07-AUG-2013 | TIME PLOTTED => 14:58

Dist	COUNTY	ROUTE	POST MILES TOTAL PROJECT	SHEET No.	TOTAL SHEETS
01	Men	128	Var	76	106

Larisa V. Sasevich 9-27-11
REGISTERED CIVIL ENGINEER DATE

6-24-13
PLANS APPROVAL DATE

REGISTERED PROFESSIONAL ENGINEER LARISA V. SASEVICH No. 71520 Exp. 12-31-13 CIVIL STATE OF CALIFORNIA

THE STATE OF CALIFORNIA OR ITS OFFICERS OR AGENTS SHALL NOT BE RESPONSIBLE FOR THE ACCURACY OR COMPLETENESS OF SCANNED COPIES OF THIS PLAN SHEET.

DRAINAGE QUANTITIES

DRAINAGE SYSTEM No.	DRAINAGE UNIT	ROUTE	PM	REMOVE INLET EA	REMOVE Culv EA	REMOVE DD EA	REMOVE HW EA	REMOVE FES EA	REMOVE PIPE LF	REMOVE CONCRETE CY	ABANDON Culv EA	SAND BACKFILL CY	APC 18" LF	APC 24" LF	APC 30" LF	APC 36" LF	APC 48" LF	APC 54" LF	8" PSP UNDERDRAIN LF	24" JACKED WSP LF	60" JACKED WSP LF	24" AP DD LF	54" AP DD LF	AFES 24" EA	AFES 30" EA	AFES 36" EA	(N) APC ELBOW EA	24" ANCHOR ASSEMBLY EA	ANCHOR ASSEMBLY SYSTEM EA	RSP (METHOD B) FACING CY	RSP (METHOD B) (LIGHT) CY	RSP (METHOD B) (1/4 TON) CY	RSP (METHOD B) (1 TON) CY	RSP (METHOD B) FABRIC (CLASS 8) SQYD	(N) H OF INLET FT	MINOR CONCRETE (MINOR STRUCTURE) CY	CONCRETED RSP (FACING, METHOD A) CY	CONCRETE INVERT PAVING LF	ROCK INVERT PAVING LF	CULVERT INVERT MIX CY	STRUCTURAL Conc CY	Misc IRON AND STEEL LB	BAR Reinf STEEL LB	(N) Max COVER FT	MARKER (Culv) EA	DESCRIPTION	DRAINAGE UNIT	DRAINAGE SYSTEM No.
22	a	128	19.36		1																																										REMOVE Culv (24" x 62.5' CSP)	a	22
	b				1																																										REMOVE Culv (24" x 62.5' CSP)	b	
	c							1																																						REMOVE FES	c	
	d							1																																						REMOVE FES	d	
	e															71.2																												3.60	2	36" APC	e	
	f				1																																									REMOVE Culv (24" x 5.0' CSP)	f	
	g													8.4																																24" APC EXTENSION	g	
	h													4.6																																24" APC EXTENSION	h	
23																																														OMITTED FROM CONTRACT		23
24	a	128	21.23		1																																									REMOVE Culv (18" x 50.6' CSP)	a	24
	b				1																																									REMOVE Culv (18" x 50.6' CSP)	b	
	c													48.8																													1.96	2	24" APC	c	
	d													48.8																																24" APC	d	
	e																							1																						24" AFES	e	
	f																							1																						24" AFES	f	
	g																														6.4			18.8												RSP (LIGHT, METHOD B)	g	
25	a	128	21.80																		170.0																							2	JACKED 60" WSP	a	25
	b																																						31.2						CULVERT INVERT MIX	b	
	c																														89.0															RSP (LIGHT, METHOD B)	c	
26	a	128	21.96		1																																									REMOVE Culv (30" x 55.8' CSP)	a	26
	b							1																																						REMOVE FES	b	
	c														54.5																													6.16	2	30" APC	c	
	d																								1																					30" AFES	d	
	e																														11.1			28.9												RSP (LIGHT, METHOD B)	e	
27	a	128	22.83		1																																									REMOVE Culv (24" x 46.0' CSP)	a	27
	b													49.4																													2.00	2	24" APC	b	
28	a	128	22.97		1																																									REMOVE CULVERT 48" x 55.6' CMP	a	28
	b						1																																							REMOVE HW	b	
	c																55.6																											2.78	2	48" APC	c	
	d																																				3.09									48" HW	d	
	e																														34.5			77.1												RSP (LIGHT, METHOD B)	e	
	f																																	6.4			5.0									CONCRETED RSP (FACING, METHOD A)	f	
SHEET TOTALS				-	8	-	1	3	-	-	-	-	-	160.0	54.5	71.2	55.6	-	-	-	170.0	-	-	2	1	-		-	-	-	141.0	-	-	131.2		3.09	5.0	-	-	31.2	-	-	-		12			

(N) = NOT A SEPARATE PAY ITEM, FOR INFORMATION ONLY.

DRAINAGE QUANTITIES

DQ-5

STATE OF CALIFORNIA - DEPARTMENT OF TRANSPORTATION
Caltrans DIVISION OF ENGINEERING

FUNCTIONAL SUPERVISOR: ROBERT E. POLGAR
CALCULATED-DESIGNED BY: LARISA V. SASEVICH
CHECKED BY: STEVE D. PENDLEY
REVISED BY
DATE REVISED

LAST REVISION 06-22-13 | DATE PLOTTED =>> -2013 | TIME PLOTTED =>>

Dist	COUNTY	ROUTE	POST MILES TOTAL PROJECT	SHEET No.	TOTAL SHEETS
01	Men	128	Var	77	106

Larisa V. Sasevich 9-27-11
REGISTERED CIVIL ENGINEER DATE

6-24-13
PLANS APPROVAL DATE

REGISTERED PROFESSIONAL ENGINEER LARISA V. SASEVICH No. 71520 Exp. 12-31-13 CIVIL STATE OF CALIFORNIA

THE STATE OF CALIFORNIA OR ITS OFFICERS OR AGENTS SHALL NOT BE RESPONSIBLE FOR THE ACCURACY OR COMPLETENESS OF SCANNED COPIES OF THIS PLAN SHEET.

DRAINAGE QUANTITIES

DRAINAGE SYSTEM No.	DRAINAGE UNIT	ROUTE	PM	REMOVE INLET EA	REMOVE Culv EA	REMOVE DD EA	REMOVE HW EA	REMOVE FES EA	REMOVE PIPE LF	REMOVE CONCRETE CY	ABANDON Culv EA	SAND BACKFILL CY	APC 18" LF	APC 24" LF	APC 30" LF	APC 36" LF	APC 48" LF	APC 54" LF	8" PSP UNDERDRAIN LF	24" JACKED WSP LF	60" JACKED WSP LF	24" AP DD LF	54" AP DD LF	AFES 24" EA	AFES 30" EA	AFES 36" EA	(N) APC ELBOW EA	24" ANCHOR ASSEMBLY EA	ANCHOR ASSEMBLY SYSTEM EA	RSP (METHOD B) FACING CY	RSP (METHOD B) (LIGHT) CY	RSP (METHOD B) (1/4 TON) CY	RSP (METHOD B) (1 TON) CY	RSP (METHOD B) FABRIC (CLASS 8) SQYD	(N) H OF INLET FT	MINOR CONCRETE (MINOR STRUCTURE) CY	CONCRETED RSP (FACING, METHOD A) CY	CONCRETE INVERT PAVING LF	ROCK INVERT PAVING LF	CULVERT INVERT MIX CY	STRUCTURAL Conc CY	Misc IRON AND STEEL LB	BAR Reinf STEEL LB	(N) Max COVER FT	MARKER (Culv) EA	DESCRIPTION	DRAINAGE UNIT	DRAINAGE SYSTEM No.
29	a	128	23.75		1																																								REMOVE Culv (24" x 25.5' HDPE)	a	29
	b				1																																								REMOVE Culv (24" x 48.5' CSP)	b	
	c													71.5																													5.75	2	24" APC	c	
	d																																	3.3	0.79						215				TYPE GCP DI WITH 36RX GRATE	d	
	e							1																																					REMOVE FES	e	
	f																																		1.20										24" HW	f	
30	a	128	24.55		1																																								REMOVE Culv (18" x 55.8' CSP)	a	30
	b													55.5																													4.50	2	24" APC	b	
	c																																		1.20										24" HW	c	
	d																														5.3			16.0											RSP (LIGHT, METHOD B)	d	
31	a	128	27.54		1																																							2	REMOVE Culv (78" x 48.6' CSP)	a	31
	b						1																																						REMOVE HW	b	
	c							1																																					REMOVE FES	c	
	d																																							6.73		2,385			78" PIPE Culv HW (H=12.0')	d	
	e																																							4.28		1,518			78" PIPE Culv HW (H=12.0')	e	
	f																																					189.2							CONCRETE INVERT PAVING	f	
	g																																						189.4						ROCK INVERT PAVING	g	
	h																																		5.44										CONCRETE FISH WEIR 1	h	
	i																																		7.25										CONCRETE FISH WEIR 2	i	
	j																													219.6															RSP (FACING, METHOD B)	j	
	k																																							12.64		1,216			PIPE Culv WW (TYPE B) (H = 12')	k	
	l																																							12.64		1,216			PIPE Culv WW (TYPE B) (H = 12')	l	
	m																														186.7														RSP (LIGHT, METHOD B)	m	
32	a	128	30.06		1																																								REMOVE Culv (18" x 81.1' CSP)	a	32
	b						1																																						REMOVE HW	b	
	c													82.2																													5.52	2	24" APC	c	
	d																																		2.73										24" SLOPED HW	d	
33	a	128	30.75		1																																								REMOVE Culv (18" x 59.0' CSP)	a	33
	b						1																																						REMOVE HW	b	
	c													57.5																													4.04	2	24" APC	c	
	d																																		1.20										24" HW	d	
	e																															9.3		22.7											RSP (1/4 TON, METHOD B)	e	
SHEET TOTALS				-	6	-	3	2	-	-	-	-	-	266.7	-	-	-	-	-	-	-	-	-	-	-	-	-	-	-	-	219.6	192.0	9.3	-	38.7	-	19.81	-	189.2	189.4	-	36.29	215	6,335		10			

(N) = NOT A SEPARATE PAY ITEM, FOR INFORMATION ONLY.

DRAINAGE QUANTITIES

DQ-6

STATE OF CALIFORNIA - DEPARTMENT OF TRANSPORTATION
DIVISION OF ENGINEERING
Caltrans
FUNCTIONAL SUPERVISOR: ROBERT E. POLGAR
CALCULATED-DESIGNED BY: LARISA V. SASEVICH
CHECKED BY: STEVE D. PENDLEY
REVISED BY / DATE REVISED

LAST REVISION 06-22-13
DATE PLOTTED => 07-AUG-2013
TIME PLOTTED => 14:58

Dist	COUNTY	ROUTE	POST MILES TOTAL PROJECT	SHEET No.	TOTAL SHEETS
01	Men	128	Var	78	106

Larisa V. Sasevich 9-27-11
REGISTERED CIVIL ENGINEER DATE

6-24-13
PLANS APPROVAL DATE

REGISTERED PROFESSIONAL ENGINEER
LARISA V. SASEVICH
No. 71520
Exp. 12-31-13
CIVIL
STATE OF CALIFORNIA

THE STATE OF CALIFORNIA OR ITS OFFICERS OR AGENTS SHALL NOT BE RESPONSIBLE FOR THE ACCURACY OR COMPLETENESS OF SCANNED COPIES OF THIS PLAN SHEET.

DRAINAGE QUANTITIES

DRAINAGE SYSTEM No.	DRAINAGE UNIT	ROUTE	PM	REMOVE INLET EA	REMOVE Culv EA	REMOVE DD EA	REMOVE HW EA	REMOVE FES EA	REMOVE PIPE LF	REMOVE CONCRETE CY	ABANDON Culv EA	SAND BACKFILL CY	APC 18" LF	APC 24" LF	APC 30" LF	APC 36" LF	APC 48" LF	APC 54" LF	8" PSP UNDERDRAIN LF	24" JACKED WSP LF	60" JACKED WSP LF	24" AP DD LF	54" AP DD LF	AFES 24" EA	AFES 30" EA	AFES 36" EA	(N) APC ELBOW EA	(N) 24" ANCHOR ASSEMBLY EA	ANCHOR ASSEMBLY SYSTEM EA	RSP (METHOD B) FACING CY	RSP (METHOD B) (LIGHT) CY	RSP (METHOD B) (1/4 TON) CY	RSP (METHOD B) (1 TON) CY	RSP (METHOD B) FABRIC (CLASS 8) SQYD	(N) H OF INLET FT	MINOR CONCRETE (MINOR STRUCTURE) CY	CONCRETED RSP (FACING, METHOD A) CY	CONCRETE INVERT PAVING LF	ROCK INVERT PAVING LF	CULVERT INVERT MIX CY	STRUCTURAL Conc CY	Misc IRON AND STEEL LB	BAR Reinf STEEL LB	(N) Max COVER FT	MARKER (Culv) EA	DESCRIPTION	DRAINAGE UNIT	DRAINAGE SYSTEM No.
34	a	128	30.82		1																																								REMOVE Culv (18" x 49.2' CSP)	a	34
	b							1																																				REMOVE 18" FES	b	
	c													53.7																													4.56	2	24" APC	c	
	d																							1																					24" AFES	d	
35	a	128	30.94	1																																									REMOVE INLET	a	35
	b										1	1.91																																ABANDON Culv (12" x 74.0' CSP)	b	
	c													60.1																													4.07	2	24" CSP	c	
	d																					17.0					1	2																	24" AP DD	d	
	e																																			1.20								24" HW	e	
	f																														4.4			10.2											RSP (LIGHT, METHOD B)	f	
	g																					15.0					1	2																	24" AP DD	g	
36	a	128	30.97								1	9.95																																ABANDON Culv (24" x 86.3' CSP)	a	36
	b						1																																					REMOVE HW	b	
	c																			92.1																							18.52	2	JACKED 24" WSP	c	
	d																																			1.20								24" HW	d	
	e																															10.3		24.0										RSP (1/4 TON, METHOD B)	e	
	f					1																																						REMOVE DD (24" x 51.5' CSP)	f	
	g																														55.3			109.4											RSP (LIGHT, METHOD B)	g	
37	a	128	31.84		1																																								REMOVE Culv (18" x 37.7' CSP)	a	37
	b													39.5																													2.67	2	24" APC	b	
	c						1																																					REMOVE HW	c	
	d						1																																					REMOVE HW	d	
	e																																			1.20								24" HW	e	
	f																																			1.20								24" HW	f	
38	a	128	31.86		1																																								REMOVE Culv (24" x 60.2' CSP)	a	38
	b													60.2																													6.93	2	24" APC	b	
	c																																			1.20								24" HW	c	
39	a	128	32.01		1																																								REMOVE Culv (18" x 10.0' CSP)	a	39
	b										1	2.78																																ABANDON Culv (18" x 52.0' CSP)	b	
	c						1																																					REMOVE HW	c	
	d													56.0																													8.25	2	24" APC	d	
	e																																			1.20								24" HW	e	
	f																															10.3		24.0										RSP (1/4 TON, METHOD B)	f	
SHEET TOTALS				1	4	1	4	1	-	-	3	14.64	-	269.5	-	-	-	-	-	92.1	-	32.0	-	1	-	-		4	-	-	59.7	20.6	-	167.6		7.20	-	-	-	-	-	-	-		12			

(N) = NOT A SEPARATE PAY ITEM, FOR INFORMATION ONLY.

DRAINAGE QUANTITIES

DQ-7

STATE OF CALIFORNIA - DEPARTMENT OF TRANSPORTATION
Caltrans® DIVISION OF ENGINEERING

FUNCTIONAL SUPERVISOR: ROBERT E. POLGAR
CALCULATED-DESIGNED BY: LARISA V. SASEVICH
CHECKED BY: STEVE D. PENDLEY
REVISED BY / DATE REVISED

LAST REVISION 06-22-13
DATE PLOTTED => 07-AUG-2013
TIME PLOTTED => 14:58

Dist	COUNTY	ROUTE	POST MILES TOTAL PROJECT	SHEET No.	TOTAL SHEETS
01	Men	128	Var	79	106

Larisa V. Sasevich 9-27-11
REGISTERED CIVIL ENGINEER DATE

6-24-13
PLANS APPROVAL DATE

REGISTERED PROFESSIONAL ENGINEER LARISA V. SASEVICH No. 71520 Exp. 12-31-13 CIVIL STATE OF CALIFORNIA

THE STATE OF CALIFORNIA OR ITS OFFICERS OR AGENTS SHALL NOT BE RESPONSIBLE FOR THE ACCURACY OR COMPLETENESS OF SCANNED COPIES OF THIS PLAN SHEET.

DRAINAGE QUANTITIES

DRAINAGE SYSTEM No.	DRAINAGE UNIT	ROUTE	PM	REMOVE INLET EA	REMOVE Culv EA	REMOVE DD EA	REMOVE HW EA	REMOVE FES EA	REMOVE PIPE LF	REMOVE CONCRETE CY	ABANDON Culv EA	SAND BACKFILL CY	APC 18" LF	APC 24" LF	APC 30" LF	APC 36" LF	APC 48" LF	APC 54" LF	8" PSP UNDERDRAIN LF	24" JACKED WSP LF	60" JACKED WSP LF	24" AP DD LF	54" AP DD LF	AFES 24" EA	AFES 30" EA	AFES 36" EA	(N) APC ELBOW EA	24" ANCHOR ASSEMBLY EA	ANCHOR ASSEMBLY SYSTEM EA	RSP (METHOD B) FACING CY	RSP (METHOD B) (LIGHT) CY	RSP (METHOD B) (1/4 TON) CY	RSP (METHOD B) (1 TON) CY	RSP (METHOD B) FABRIC (CLASS 8) SQYD	(N) H OF INLET FT	MINOR CONCRETE (MINOR STRUCTURE) CY	CONCRETED RSP (FACING, METHOD A) CY	CONCRETE INVERT PAVING LF	ROCK INVERT PAVING LF	CULVERT INVERT MIX CY	STRUCTURAL Conc CY	Misc IRON AND STEEL LB	BAR Reinf STEEL LB	(N) Max COVER FT	MARKER (Culv) EA	DESCRIPTION	DRAINAGE UNIT	DRAINAGE SYSTEM No.
40	a	128	33.23																																	1.20										24" HW	a	40
	b																					55.0					1																	4.00		24" AP DD	b	
	c							1																																						REMOVE FES	c	
	d					1																																								REMOVE DD (18" x 44.3′ CSP)	d	
	e																																	5.0	1.73						239				TYPE GO DI WITH 24-12X GRATE	e	
	f													77.1																													6.25	2	24" APC	f	
	g			1																																										REMOVE INLET	g	
	h																																	7.0	1.21						177				TYPE GCP (Mod) DI WITH	h	
																																														¼" CHECKERED PLATE		
	i													65.0																													10.25		24" APC	i	
	j																																	7.0	1.21						177				TYPE GCP (Mod) DI WITH	j	
																																														¼" CHECKERED PLATE		
	k													50.0																													10.00		24" APC	k	
	l																														6.2			18.2												RSP (LIGHT, METHOD B)	l	
	m				1																																									REMOVE Culv (18" x 10.0′ CSP)	m	
	n										1	3.37																																		ABANDON Culv (18" x 87.7′ CSP)	n	
	o										1	3.30																																		ABANDON Culv (18" x 95.2′ CSP)	o	
	p																														2.7			9.3												RSP (LIGHT, METHOD B)	p	
41	a	128	33.70		1																																									REMOVE Culv (24" x 78.7′ CSP)	a	41
	b													82.3																													4.37	2	24" APC	b	
	c																					22.0					1	2																		24" AP DD	c	
	d																																		1.20											24" HW	d	
	e																															9.3		22.7												RSP (1/4 TON, METHOD B)	e	
42	a	128	33.78				1																																							REMOVE HW	a	42
	b										1																																			ABANDON Culv (54" x 125.6′ CSP)	b	
	c																	85.5																									12.70	2	54" APC	c	
	d																						40.4						1																	54" AP DD	d	
	e																						9.0																							54" AP DD	e	
	f																																		3.31											54" HW	f	
	g																														14.2			33.8												RSP (LIGHT, METHOD B)	g	
	h																																58.0	81.3												RSP (1 TON, METHOD B)	h	
	i								90																																					REMOVE PIPE 8" x 90′ PSP	i	
	j																		90.0																											8" x 90′ PSP	j	
43	a	128	36.01		1																																									REMOVE Culv (18" x 38.7′ CSP)	a	43
	b			1																																										REMOVE INLET	b	
	c													39.0																													4.92	2	24" APC	c	
	d																																	3.4	1.34						239				TYPE GO DI WITH 24-12X GRATE	d	
SHEET TOTALS				2	3	1	1	1	90	-	3	6.67	-	313.4	-	-	-	85.5	90.0	-	-	77.0	49.4	-	-	-		2	1	-	23.1	9.3	58.0	165.3		11.2	-	-	-	-	-	832	-		8			

(N) = NOT A SEPARATE PAY ITEM, FOR INFORMATION ONLY.

DRAINAGE QUANTITIES
DQ-8

STATE OF CALIFORNIA - DEPARTMENT OF TRANSPORTATION
Caltrans®
DIVISION OF ENGINEERING

FUNCTIONAL SUPERVISOR: ROBERT E. POLGAR
CALCULATED-DESIGNED BY: LARISA V. SASEVICH
CHECKED BY: STEVE D. PENDLEY
REVISED BY
DATE REVISED

LAST REVISION 06-22-13
DATE PLOTTED => 07-AUG-2013
TIME PLOTTED => 14:58

Dist	COUNTY	ROUTE	POST MILES TOTAL PROJECT	SHEET No.	TOTAL SHEETS
01	Men	128	Var	80	106

Larisa V. Sasevich 9-27-11
REGISTERED CIVIL ENGINEER DATE

6-24-13
PLANS APPROVAL DATE

REGISTERED PROFESSIONAL ENGINEER LARISA V. SASEVICH No. 71520 Exp. 12-31-13 CIVIL STATE OF CALIFORNIA

THE STATE OF CALIFORNIA OR ITS OFFICERS OR AGENTS SHALL NOT BE RESPONSIBLE FOR THE ACCURACY OR COMPLETENESS OF SCANNED COPIES OF THIS PLAN SHEET.

DRAINAGE QUANTITIES

DRAINAGE SYSTEM No.	DRAINAGE UNIT	ROUTE	PM	REMOVE INLET EA	REMOVE Culv EA	REMOVE DD EA	REMOVE HW EA	REMOVE FES EA	REMOVE PIPE LF	REMOVE CONCRETE CY	ABANDON Culv EA	SAND BACKFILL CY	APC 18" LF	APC 24" LF	APC 30" LF	APC 36" LF	APC 48" LF	APC 54" LF	8" PSP UNDERDRAIN LF	24" JACKED WSP LF	60" JACKED WSP LF	24" AP DD LF	54" AP DD LF	AFES 24" EA	AFES 30" EA	AFES 36" EA	(N) APC ELBOW EA	24" ANCHOR ASSEMBLY EA	ANCHOR ASSEMBLY SYSTEM EA	RSP (METHOD B) FACING CY	RSP (METHOD B) (LIGHT) CY	RSP (METHOD B) (1/4 TON) CY	RSP (METHOD B) (1 TON) CY	RSP (METHOD B) FABRIC (CLASS 8) SQYD	(N) H OF INLET FT	MINOR CONCRETE (MINOR STRUCTURE) CY	CONCRETED RSP (FACING, METHOD A) CY	CONCRETE INVERT PAVING LF	ROCK INVERT PAVING LF	CULVERT INVERT MIX CY	STRUCTURAL Conc CY	Misc IRON AND STEEL LB	BAR Reinf STEEL LB	(N) Max COVER FT	MARKER (Culv) EA	DESCRIPTION	DRAINAGE UNIT	DRAINAGE SYSTEM No.
44	a	128	36.63																																	11.9								15.21	2	WEIR BASE	a	44
	b																																			2.25										CONCRETE WEIRS	b	
	c									2.0																																				REMOVE CONCRETE (APRON)	c	
	d									1.7																																				REMOVE CONCRETE (CUTOFF WALL)	d	
	e																																			3.81										CONCRETE (APRON)	e	
	f																																			59.82										CONCRETE FISHWAY	f	
	g																															22.2														RSP (1/4 TON, METHOD B)	g	
	h																														31.0															RSP (LIGHT, METHOD B)	h	
45																																														OMITTED FROM CONTRACT		45
46	a	128	39.22				1																																							REMOVE HW	a	46
	b				1																																									REMOVE Culv (18" x 62.3' CSP)	b	
	c													64.4																														6.20	2	24" APC	c	
	d																																			1.20										24" HW	d	
	e																														6.2			18.2												RSP (LIGHT, METHOD B)	e	
47	a	128	39.28		1																																									REMOVE Culv (24" x 30.0' CSP)	a	47
	b										1	8.32																																	ABANDON Culv (24" x 75.0' CSP)	b	
	c													112.2																														10.45	2	24" APC	c	
	d																																			1.20										24" HW	d	
48	a	128	39.88																																			180.8							2	CONCRETE INVERT PAVING	a	48
																																							180.8							ROCK INVERT PAVING		
49	a	128	40.24				1																																							REMOVE HW	a	49
	b				1																																									REMOVE Culv (24" x 62.3' CSP)	b	
	c													59.3																														6.74	2	24" APC	c	
	d																																			1.20										24" HW	d	
																															2.9			10.0												RSP (LIGHT, METHOD B)	e	
50	a	128	40.63				1																																							REMOVE HW	a	50
	b				1																																									REMOVE Culv (18" x 51.0' CSP)	b	
	c													52.6																														4.11	2	24" APC	c	
	d																																			1.20										24" HW	d	
51	a	128	41.38		1																																									REMOVE Culv (24" x 45.2' CMP)	a	51
	b			1																																									REMOVE INLET	b	
	c													46.1																														5.00	2	24" APC	c	
	d																																		4.6	1.63						239				TYPE GO DI WITH 24-12X GRATE	d	
	e																					12.0						2																		24" AP DD	e	
	f																							1																						24" AFES	f	
	g																														1.8			10.2												RSP (LIGHT, METHOD B)	g	
SHEET TOTALS				1	5	-	3	-	-	3.7	1	8.32	-	334.6	-	-	-	-	-	-	-	12.0	-	1	-	-		2	-	-	41.9	22.2	-	38.4		84.21	-	180.8	180.8	-	-	239	-		14			

(N) = NOT A SEPARATE PAY ITEM, FOR INFORMATION ONLY.

DRAINAGE QUANTITIES

DQ-9

STATE OF CALIFORNIA - DEPARTMENT OF TRANSPORTATION
Caltrans® DIVISION OF ENGINEERING

FUNCTIONAL SUPERVISOR: ROBERT E. POLGAR
CALCULATED-DESIGNED BY: LARISA V. SASEVICH
CHECKED BY: STEVE D. PENDLEY
REVISED BY / DATE REVISED

LAST REVISION 06-22-13 | DATE PLOTTED => 07-AUG-2013 | TIME PLOTTED => 14:58

Dist	COUNTY	ROUTE	POST MILES TOTAL PROJECT	SHEET No.	TOTAL SHEETS
01	Men	128	Var	81	106

Larisa V. Sasevich 9-27-11
REGISTERED CIVIL ENGINEER DATE

6-24-13
PLANS APPROVAL DATE

REGISTERED PROFESSIONAL ENGINEER LARISA V. SASEVICH No. 71520 Exp. 12-31-13 CIVIL STATE OF CALIFORNIA

THE STATE OF CALIFORNIA OR ITS OFFICERS OR AGENTS SHALL NOT BE RESPONSIBLE FOR THE ACCURACY OR COMPLETENESS OF SCANNED COPIES OF THIS PLAN SHEET.

DRAINAGE QUANTITIES

DRAINAGE SYSTEM No.	DRAINAGE UNIT	ROUTE	PM	REMOVE INLET EA	REMOVE Culv EA	REMOVE DD EA	REMOVE HW EA	REMOVE FES EA	REMOVE PIPE LF	REMOVE CONCRETE CY	ABANDON Culv EA	SAND BACKFILL CY	APC 18" LF	APC 24" LF	APC 30" LF	APC 36" LF	APC 48" LF	APC 54" LF	8" PSP UNDERDRAIN LF	24" JACKED WSP LF	60" JACKED WSP LF	24" AP DD LF	54" AP DD LF	AFES 24" EA	AFES 30" EA	AFES 36" EA	(N) APC ELBOW EA	(N) 24" ANCHOR ASSEMBLY EA	(N) ANCHOR ASSEMBLY SYSTEM EA	RSP (METHOD B) FACING CY	RSP (METHOD B) (LIGHT) CY	RSP (METHOD B) (1/4 TON) CY	RSP (METHOD B) (1 TON) CY	RSP (METHOD B) FABRIC (CLASS 8) SQYD	(N) H OF INLET FT	MINOR CONCRETE (MINOR STRUCTURE) CY	CONCRETED RSP (FACING, METHOD A) CY	CONCRETE INVERT PAVING LF	ROCK INVERT PAVING LF	CULVERT INVERT MIX CY	STRUCTURAL Conc CY	Misc IRON AND STEEL LB	BAR Reinf STEEL LB	(N) Max COVER FT	MARKER (Culv) EA	DESCRIPTION	DRAINAGE UNIT	DRAINAGE SYSTEM No.
52	a	128	45.21		1																																										REMOVE Culv (18" x 28.2' CSP)	a	52
	b						1																																							REMOVE HW	b	
	c												35.1																															1.33	2	18" APC	c	
	d																																			0.91										18" HW	d	
	e																																			7.81										MONOLITHIC POUR	e	
53	a	128	45.25		1																																									REMOVE Culv (18" x 30.2' CSP)	a	53
	b						1																																							REMOVE HW	b	
	c												35.1																															1.37	2	18" APC	c	
	d																																			8.98										MONOLITHIC POUR	d	
54																																														OMITTED FROM CONTRACT		54
55	a	128	45.91		1																																									REMOVE Culv (24" x 50.0' CSP)	a	55
	b													50.5																														6.96	2	24" APC	b	
	c																																			1.20										24" HW	c	
	d																															8.0		20.0												RSP (1/4 TON, METHOD B)	d	
56	a	128	49.28		1																																									REMOVE Culv (12" x 12.1' CMP)	a	56
	b										1	1.37																																		ABANDON Culv (12" x 50.9' CMP)	b	
	c						1																																							REMOVE HW	c	
	d						1																																							REMOVE HW	d	
	e													57.6																														4.63	2	24" APC	e	
	f																					13.9					1	2																		24" AP DD	f	
	g																																			1.20										24" HW	g	
	h																														6.2			18.2												RSP (LIGHT, METHOD B)	h	
Sht DQ-2 TOTALS				2	8	-	6	-	-	-	-	-	-	317.9	-	206.6	-	-	-	-	-	-	-	-	-	1		-	-	-	-	-	-	-		12.33		-	-	-	-	631	-		16	Sht DQ-2 TOTALS		
Sht DQ-3 TOTALS				-	6	-	6	-	-	-	1	3.40	-	267.6	-	56.4	133.6	-	-	-	-	-	-	-	-	-		-	-	2.4	45.0	-	-	113.3		14.03		-	-	-	-	-	-		12	Sht DQ-3 TOTALS		
Sht DQ-4 TOTALS				-	7	-	6	-	-	-	3	31.59	-	120.1	54.7	106.5	50.9	-	-	105.7	-	-	-	-	-	-		-	-	-	7.7	45.2	-	115.6		11.05		-	-	-	-	-	-		12	Sht DQ-4 TOTALS		
Sht DQ-5 TOTALS				-	8	-	1	3	-	-	-	-	-	160.0	54.5	71.2	55.6	-	-	-	170.0	-	-	2	1	-		-	-		141.0	-	-	131.2		3.09	5.0	-	-	31.2	-	-	-		12	Sht DQ-5 TOTALS		
Sht DQ-6 TOTALS				-	6	-	3	2	-	-	-	-	-	266.7	-	-	-	-	-	-	-	-	-	-	-	-		-	-	219.6	192.0	9.3	-	38.7		19.81		189.2	189.4	-	36.29	215	6,335		10	Sht DQ-6 TOTALS		
Sht DQ-7 TOTALS				1	4	1	4	1	-	-	3	14.64	-	269.5	-	-	-	-	-	92.1	-	32.0	-	1	-	-		4	-	-	59.7	20.6	-	167.6		7.20		-	-	-	-	-	-		12	Sht DQ-7 TOTALS		
Sht DQ-8 TOTALS				2	3	1	1	1	90	-	3	6.67	-	313.4	-	-	-	85.5	90.0	-	-	77.0	49.4	-	-	-		2	1	-	23.1	9.3	58.0	165.3		11.20		-	-	-	-	832	-		8	Sht DQ-8 TOTALS		
Sht DQ-9 TOTALS				1	5	-	3	-	-	3.7	1	8.32	-	334.6	-	-	-	-	-	-	-	12.0	-	1	-	-		2	-	-	41.9	22.2	-	38.4		84.21		180.8	180.8	-	-	239	-		14	Sht DQ-9 TOTALS		
Sht DQ-10 TOTALS				-	4	-	4	-	-	-	1	1.37	70.2	108.1	-	-	-	-	-	-	-	13.9	-	-	-	-		2	-	-	6.2	8.0	-	38.2		20.10		-	-	-	-	-	-		8	Sht DQ-10 TOTALS		
GRAND TOTALS				6	51	2	34	7	90	3.7	12	65.99	70.2	2157.9	109.2	440.7	240.1	85.5	90.0	197.8	170.0	134.9	49.4	4	1	1		10	1	222.0	516.6	114.6	58.0	808.3		183.02	5.0	370.0	370.2	31.2	36.29	1917	6,335		104	GRAND TOTALS		

(N) = NOT A SEPARATE PAY ITEM, FOR INFORMATION ONLY.

DRAINAGE QUANTITIES

DQ-10

STATE OF CALIFORNIA - DEPARTMENT OF TRANSPORTATION
Caltrans DIVISION OF ENGINEERING

FUNCTIONAL SUPERVISOR: ROBERT E. POLGAR
CALCULATED-DESIGNED BY: LARISA V. SASEVICH
CHECKED BY: MARTIN GARCIA
REVISED BY / DATE REVISED

LAST REVISION 06-22-13 | DATE PLOTTED => 07-AUG-2013 | TIME PLOTTED => 14:58

Dist	COUNTY	ROUTE	POST MILES TOTAL PROJECT	SHEET No.	TOTAL SHEETS
01	Men	128	Var	82	106

Larisa V. Sasevich 9-27-11
REGISTERED CIVIL ENGINEER DATE

6-24-13
PLANS APPROVAL DATE

REGISTERED PROFESSIONAL ENGINEER LARISA V. SASEVICH No. 71520 Exp. 12-31-13 CIVIL STATE OF CALIFORNIA

THE STATE OF CALIFORNIA OR ITS OFFICERS OR AGENTS SHALL NOT BE RESPONSIBLE FOR THE ACCURACY OR COMPLETENESS OF SCANNED COPIES OF THIS PLAN SHEET.

NOTES:

1. THIS PLAN ACCURATE FOR CONSTRUCTION AREA SIGN WORK ONLY.
2. C23B(CA) SHALL HAVE BLACK LETTERS ON ORANGE BACKGROUND.
3. EXACT SIGN LOCATIONS TO BE DETERMINED BY THE ENGINEER.

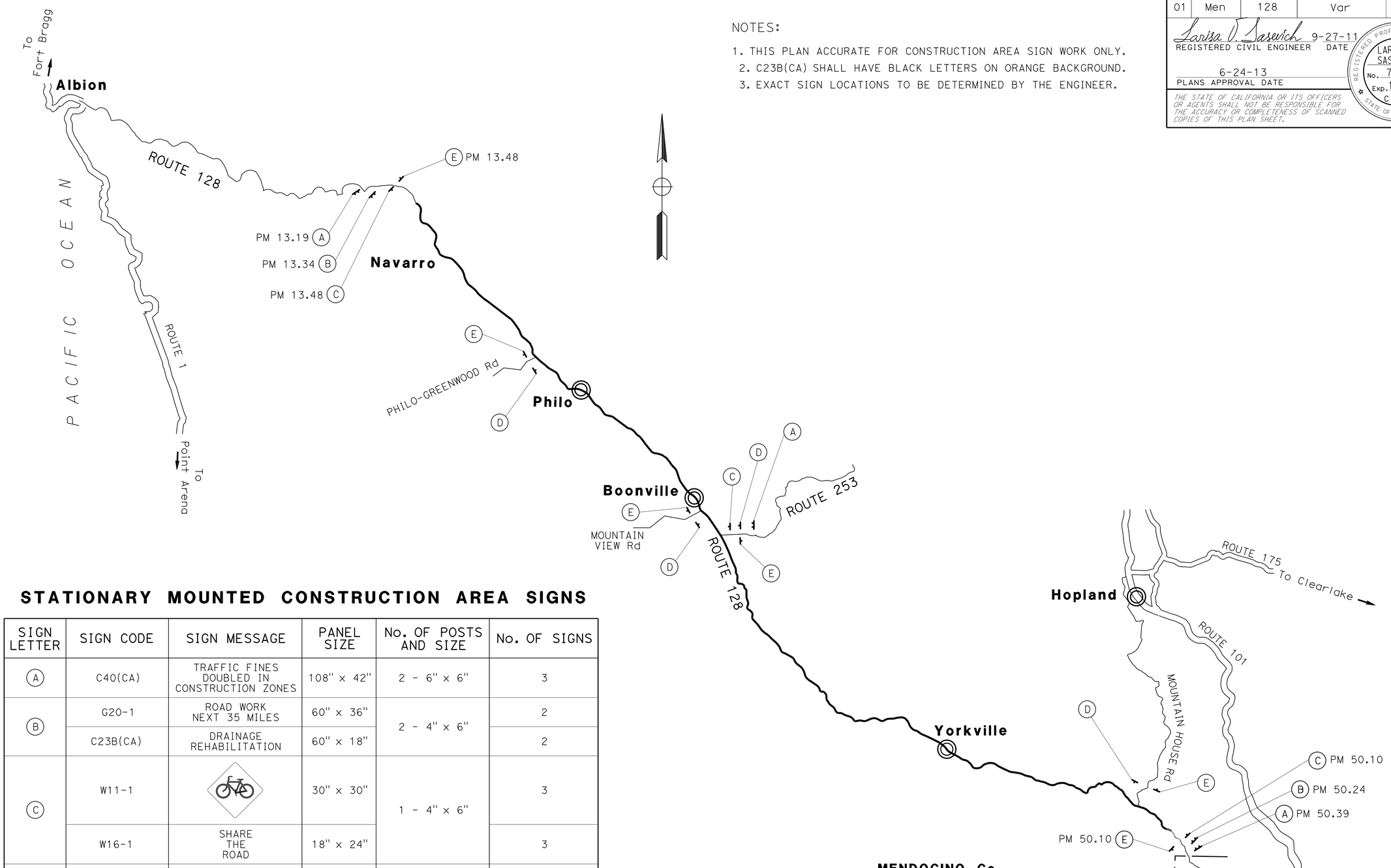

STATIONARY MOUNTED CONSTRUCTION AREA SIGNS

SIGN LETTER	SIGN CODE	SIGN MESSAGE	PANEL SIZE	No. OF POSTS AND SIZE	No. OF SIGNS
A	C40(CA)	TRAFFIC FINES DOUBLED IN CONSTRUCTION ZONES	108" x 42"	2 - 6" x 6"	3
B	G20-1	ROAD WORK NEXT 35 MILES	60" x 36"	2 - 4" x 6"	2
	C23B(CA)	DRAINAGE REHABILITATION	60" x 18"		2
C	W11-1		30" x 30"	1 - 4" x 6"	3
	W16-1	SHARE THE ROAD	18" x 24"		3
D	W20-1	ROAD WORK AHEAD	36" x 36"	1 - 4" x 6"	4
E	G20-2	END ROAD WORK	36" x 18"	1 - 4" x 4"	6

CONSTRUCTION AREA SIGNS

NO SCALE

CS-1

STATE OF CALIFORNIA - DEPARTMENT OF TRANSPORTATION
Caltrans® DIVISION OF ENGINEERING

FUNCTIONAL SUPERVISOR: ROBERT E. POLGAR
CALCULATED-DESIGNED BY: LARISA V. SASEVICH
CHECKED BY: MARTIN GARCIA
REVISED BY
DATE REVISED

LAST REVISION 03-30-11 | DATE PLOTTED => 07-AUG-2013 | TIME PLOTTED => 14:58

Dist	COUNTY	ROUTE	POST MILES TOTAL PROJECT	SHEET No.	TOTAL SHEETS
01	Men	128	Var	83	106

Larisa V. Sasevich 9-27-11
REGISTERED CIVIL ENGINEER DATE

6-24-13
PLANS APPROVAL DATE

REGISTERED PROFESSIONAL ENGINEER
LARISA V. SASEVICH
No. 71520
Exp. 12-31-13
CIVIL
STATE OF CALIFORNIA

THE STATE OF CALIFORNIA OR ITS OFFICERS OR AGENTS SHALL NOT BE RESPONSIBLE FOR THE ACCURACY OR COMPLETENESS OF SCANNED COPIES OF THIS PLAN SHEET.

PAINT TRAFFIC STRIPE (1-COAT)

LOCATION	DETAIL No.			
	6	19	22	27B
	LF	LF	LF	LF
DS 1-7			78.0	156.0
DS 9-11			55.7	111.4
DS 12-13		21.1		42.2
DS 14-18			121.3	242.6
DS 19-22		55.6		111.2
DS 24			12.8	25.6
DS 26-29			44.9	89.7
DS 30	10.8			21.5
DS 32			12.0	24.0
DS 33-35			34.0	67.9
DS 37-43			104.8	209.5
DS 46-47			79.4	158.7
DS 49			12.7	25.4
DS 50-56			67.3	134.5
SUBTOTAL	10.8	76.7	622.9	1,420.2
TOTAL	2,130.6			

PAVEMENT MARKER (RETROREFLECTIVE)

LOCATION	DETAIL No.		
	6	19	22
	EA	EA	EA
DS 1-7			8
DS 9-11			6
DS 12-13		2	
DS 14-18			12
DS 19-22		5	
DS 24			2
DS 26-29			4
DS 30	1		
DS 32			2
DS 33-35			2
DS 37-43			10
DS 46-47			8
DS 49			2
DS 50-56			6
SUBTOTAL	1	7	62
TOTAL	70		

PAVEMENT DELINEATION QUANTITIES

PDQ-1

STATE OF CALIFORNIA - DEPARTMENT OF TRANSPORTATION
Caltrans® DIVISION OF ENGINEERING

FUNCTIONAL SUPERVISOR: ROBERT E. POLGAR
CALCULATED-DESIGNED BY: LARISA V. SASEVICH
CHECKED BY: MARTIN GARCIA
REVISED BY
DATE REVISED

LAST REVISION 03-30-11
DATE PLOTTED => 07-AUG-2013
TIME PLOTTED => 14:59

Dist	COUNTY	ROUTE	POST MILES TOTAL PROJECT	SHEET No.	TOTAL SHEETS
01	Men	128	Var	84	106

Larisa V. Sasevich 9-27-11
REGISTERED CIVIL ENGINEER DATE

6-24-13
PLANS APPROVAL DATE

REGISTERED PROFESSIONAL ENGINEER LARISA V. SASEVICH No. 71520 Exp. 12-31-13 CIVIL STATE OF CALIFORNIA

THE STATE OF CALIFORNIA OR ITS OFFICERS OR AGENTS SHALL NOT BE RESPONSIBLE FOR THE ACCURACY OR COMPLETENESS OF SCANNED COPIES OF THIS PLAN SHEET.

ROADWAY QUANTITIES

DRAINAGE SYSTEM No.	PM	(N) ROADWAY EXCAVATION	IMPORTED ROCKY MATERIAL	CONCRETE Bkf (PIPE TRENCH)	(N) MINOR HMA	HMA (TYPE A)	PLACE HMA (Misc AREA)
		CY			TON		SQYD
1	14.30				10.05		
2	14.39				6.83		
3	14.61	1.35		5.95	5.50		
4	14.67		13.20		7.76	3.38	10.01
5	14.80				23.92		
6	14.98	1.41			8.24		
7	15.14		10.04		9.06		
8	15.14 DW	1.87	23.62				
9	15.62	4.96		2.38	9.25		
10	15.90	8.76	40.55		20.51		
11	16.63				23.91		
12	16.88				13.35		
13	16.91		15.30		9.94		
14	17.11		151.53		15.90		
15	17.22	1.64	12.02	3.50	10.59		
16	17.51				33.40		
17	OMITTED FROM CONTRACT						
18	18.28		13.55		24.94		
19	18.46				11.95		
20	18.88		40.70		13.12		
21	19.30	3.14		6.05	6.84		
22	19.36	10.80		11.36	20.66		
23	OMITTED FROM CONTRACT						
24	21.23	1.45		21.03	15.14		
25	21.80						
26	21.96				12.65		
27	22.83	5.23		7.15	6.36		
28	22.97			21.26	14.43		
29	23.75				11.81		
30	24.55	0.57	7.59	2.15	10.53		
SYS 1-30 SUBTOTAL		41.18	328.10	80.83	356.64	3.38	10.01

ROADWAY QUANTITIES

DRAINAGE SYSTEM No.	PM	(N) ROADWAY EXCAVATION	IMPORTED ROCKY MATERIAL	CONCRETE Bkf (PIPE TRENCH)	(N) MINOR HMA	HMA (TYPE A)	PLACE HMA (Misc AREA)
		CY			TON		SQYD
31	27.54						
32	30.06				10.59		
33	30.75				7.57		
34	30.82	48.19		4.40	12.38		
35	30.94				9.37		
36	30.97						
37	31.84	2.83		7.19	5.56		
38	31.86	0.21			13.63		
39	32.01				14.20		
40	33.23			7.73	5.46	3.01	8.91
41	33.70		57.26		10.77		
42	33.78				30.38		
43	36.01	0.75	5.35	2.19	11.19	3.08	9.13
44	36.63						
45	OMITTED FROM CONTRACT						
46	39.22				21.91		
47	39.28				33.72		
48	39.88						
49	40.24		17.67		12.24		
50	40.63				7.68		
51	41.38		22.18		9.39	4.40	13.05
52	45.21	7.31			6.14		
53	45.25	6.64			4.92		
54	OMITTED FROM CONTRACT						
55	45.91	3.77			13.40		
56	49.28	2.79	11.33		10.39		
SYS 1-30 SUBTOTAL		41.18	328.10	80.83	356.64	3.38	10.01
SYS 31-56 SUBTOTAL		72.49	113.79	21.51	250.89	10.49	31.09
SUBTOTAL FROM DRAINAGE QUANTITIES:							
SUBTOTAL FROM SUMMARY OF QUANTITIES:							
PLACE HMA DIKE (TYPE A) *						2.00	
PLACE HMA DIKE (TYPE F) *						0.49	
GRAND TOTALS		113.67	441.89	102.34	607.53	16.36	41.10

DITCH EXCAVATION

DRAINAGE SYSTEM No.	PM	DITCH EXCAVATION
		CY
10	15.90	4.00
18	18.28	40.00
24	21.23	10.00
25	21.80	83.33
28	22.97	4.00
31	27.54	23.56
36	30.97	113.67
TOTAL		278.56

TEMPORARY CRASH CUSHION MODULE

LOCATION	ARRAY	TEMPORARY CRASH CUSHION MODULE
		EA
PM 30.97	'TS14'	14

* - QUANTITY FROM PLACE HMA DIKE (TYPE A) TABLE (SEE SUMMARY OF QUANTITIES SHEET Q-2).

(N) = NOT A SEPARATE PAY ITEM, FOR INFORMATION ONLY.

SUMMARY OF QUANTITIES

Q-1

STATE OF CALIFORNIA - DEPARTMENT OF TRANSPORTATION
Caltrans® DIVISION OF ENGINEERING

FUNCTIONAL SUPERVISOR: ROBERT E. POLGAR
CALCULATED-DESIGNED BY: LARISA V. SASEVICH
CHECKED BY: STEVE D. PENDLEY
REVISED BY / DATE REVISED

LAST REVISION 06-22-13
DATE PLOTTED => 07-AUG-2013
TIME PLOTTED => 14:59

Dist	COUNTY	ROUTE	POST MILES TOTAL PROJECT	SHEET No.	TOTAL SHEETS
01	Men	128	Var	85	106

Larisa V. Sasevich 9-27-11
REGISTERED CIVIL ENGINEER DATE

6-24-13
PLANS APPROVAL DATE

REGISTERED PROFESSIONAL ENGINEER LARISA V. SASEVICH No. 71520 Exp. 12-31-13 CIVIL STATE OF CALIFORNIA

THE STATE OF CALIFORNIA OR ITS OFFICERS OR AGENTS SHALL NOT BE RESPONSIBLE FOR THE ACCURACY OR COMPLETENESS OF SCANNED COPIES OF THIS PLAN SHEET.

RECONSTRUCT FENCE (TYPE WM)

DRAINAGE SYSTEM No.	PM	LENGTH LF
8	15.14 DW	52.6
12	16.88	26.3
13	16.91	26.3
14	17.11	52.5
15	17.22	28.2
16	17.51	108.9
31	27.54	107.6
36	30.97	66.8
38	31.86	67.5
39	32.01	30.11
42	33.78	84.9
52	45.21	29.6
53	45.25	27.9
55	45.91	59.4
56	49.28	38.5
TOTAL		807.11

REMOVE FENCE

DRAINAGE SYSTEM No.	PM	LENGTH LF
18	18.28	112.0
21	19.30	37.3
22	19.36	145.3
TOTAL		294.6

TEMPORARY FENCE

DRAINAGE SYSTEM No.	PM	LENGTH LF
18	18.28	112.0
21	19.30	37.3
22	19.36	145.3
TOTAL		294.6

TEMPORARY CHAIN LINK GATE

DRAINAGE SYSTEM No.	PM	TEMPORARY CHAIN LINK GATE EA
25	21.80	1
TOTAL		1

CABLE RAILING

DRAINAGE SYSTEM No.	PM	LENGTH LF
5	14.80	12.0
8	15.14	11.8
10	15.90	12.0
14	17.11	56.7
16	17.51	12.0
19	18.46	30.0
28	22.97	16.8
31	27.54	59.0
42	33.78	17.0
44	36.63	80.0
TOTAL		307.3

MINOR CONCRETE

DRAINAGE SYSTEM No.	PM	Misc CONSTRUCTION CY	GUTTER CY
28	22.97	0.87	1.78
TOTAL		0.87	1.78

RECONSTRUCT MBGR (WOOD POST)

DRAINAGE SYSTEM No.	PM	R+/L+	LENGTH LF
36	30.97	L+	12.5
43	36.01	R+	25.0
TOTAL			37.5

HMA DIKE (TYPE A)

DRAINAGE SYSTEM No.	PM	LENGTH LF	HMA (TYPE A) TON
4	14.67	20	0.50
40	33.23	20	0.50
43	36.01	20	0.50
51	41.38	20	0.50
TOTAL		80	2.00*

* - QUANTITY INCLUDED IN THE Rdwy QUANTITIES TABLE (SEE SUMMARY OF QUANTITIES SHEET Q-1).

HMA DIKE (TYPE F)

DRAINAGE SYSTEM No.	PM	LENGTH LF	HMA (TYPE A) TON
29	23.75	17.2	0.22
30	24.55	8.5	0.11
47	39.28	13.0	0.16
TOTAL		38.7	0.49*

* - QUANTITY INCLUDED IN THE Rdwy QUANTITIES TABLE (SEE SUMMARY OF QUANTITIES SHEET Q-1).

16" CAST-IN-DRILLED-HOLE CONCRETE PILING

DRAINAGE SYSTEM No.	PM	LENGTH LF
42	33.78	30
TOTAL		30

SUMMARY OF QUANTITIES

Q-2

STATE OF CALIFORNIA - DEPARTMENT OF TRANSPORTATION
Caltrans® DIVISION OF ENGINEERING

FUNCTIONAL SUPERVISOR: ROBERT E. POLGAR

CALCULATED-DESIGNED BY: LARISA V. SASEVICH
CHECKED BY: STEVE D. PENDLEY

REVISED BY | DATE REVISED

LAST REVISION 06-22-13 | DATE PLOTTED => 07-AUG-2013 | TIME PLOTTED => 14:59

Dist	COUNTY	ROUTE	POST MILES TOTAL PROJECT	SHEET No.	TOTAL SHEETS
01	Men	128	Var	86	106

Larisa V. Sasevich 9-27-11
REGISTERED CIVIL ENGINEER DATE

6-24-13
PLANS APPROVAL DATE

REGISTERED PROFESSIONAL ENGINEER
LARISA V. SASEVICH
No. 71520
Exp. 12-31-13
CIVIL
STATE OF CALIFORNIA

THE STATE OF CALIFORNIA OR ITS OFFICERS OR AGENTS SHALL NOT BE RESPONSIBLE FOR THE ACCURACY OR COMPLETENESS OF SCANNED COPIES OF THIS PLAN SHEET.

TEMPORARY FENCE (TYPE ESA)

DRAINAGE SYSTEM No.	PM	TEMPORARY FENCE (TYPE ESA) LF
1	14.30	40
2	14.39	30
3	14.61	80
4	14.67	40
5	14.80	154
6	14.98	80
7	15.14	60
8	15.14DW	100
9	15.62	30
10	15.90	70
11	16.63	95
12	16.88	110
13	16.91	90
14	17.11	186
15	17.22	80
16	17.51	130
17	OMITTED FROM CONTRACT	
18	18.28	50
19	18.46	-
20	18.88	50
21	19.30	90
22	19.36	80
23	OMITTED FROM CONTRACT	
24	21.23	55
25	21.80	220
26	21.96	40
27	22.83	90
28	22.97	120
29	23.75	60
30	24.55	70
SYS 1-30 SUBTOTAL		2300

DRAINAGE SYSTEM No.	PM	TEMPORARY FENCE (TYPE ESA) LF
31	27.54	300
32	30.06	-
33	30.75	30
34	30.82	30
35	30.94	-
36	30.97	70
37	31.84	30
38	31.86	80
39	32.01	-
40	33.23	-
41	33.70	-
42	33.78	60
43	36.01	-
44	36.63	-
45	OMITTED FROM CONTRACT	
46	39.22	-
47	39.28	-
48	39.88	330
49	40.24	40
50	40.63	-
51	41.38	50
52	45.21	-
53	45.25	-
54	OMITTED FROM CONTRACT	
55	45.91	110
56	49.28	-
SYS 1-30 SUBTOTAL		2300
SYS 31-56 SUBTOTAL		1130
TOTAL		3430

SUMMARY OF QUANTITIES

Q-3

STATE OF CALIFORNIA - DEPARTMENT OF TRANSPORTATION
Caltrans DIVISION OF ENGINEERING

FUNCTIONAL SUPERVISOR: ROBERT E. POLGAR
CALCULATED-DESIGNED BY: LARISA V. SASEVICH
CHECKED BY: MARTIN GARCIA
REVISED BY
DATE REVISED

LAST REVISION 03-30-11 | DATE PLOTTED => 07-AUG-2013 | TIME PLOTTED => 14:59

Dist	COUNTY	ROUTE	POST MILES TOTAL PROJECT	SHEET No.	TOTAL SHEETS
01	Men	128	Var	87	106

Laura Lazzarotto
LICENSED LANDSCAPE ARCHITECT

6-24-13
PLANS APPROVAL DATE

LICENSED LANDSCAPE ARCHITECT
Laura Lazzarotto
Lic. No. 2496
8-31-13
Renewal Date
6-24-13
Date
STATE OF CALIFORNIA

THE STATE OF CALIFORNIA OR ITS OFFICERS OR AGENTS SHALL NOT BE RESPONSIBLE FOR THE ACCURACY OR COMPLETENESS OF SCANNED COPIES OF THIS PLAN SHEET.

FIBER ROLLS

SEQUENCE	ITEM	MATERIAL		REMARKS
		DESCRIPTION	TYPE	
Fiber Rolls must be installed before Erosion Control.	FIBER ROLLS	FIBER ROLL	TYPE B 8" TO 10" Dia	Type 1 Fiber Roll Installation

EROSION CONTROL TYPE 1

SEQUENCE	ITEM	MATERIAL		APPLICATION RATE
		DESCRIPTION	TYPE	
STEP 1	COMPOST BLANKET	COMPOST	MEDIUM	269 CY/ACRE
STEP 2	DRY SEED	SEED	MIX 1	144 LB/ACRE

EROSION CONTROL TYPE 2

SEQUENCE	ITEM	MATERIAL		APPLICATION RATE
		DESCRIPTION	TYPE	
STEP 1	HYDROSEED	SEED	MIX 1	144 LB/ACRE
		FIBER	WOOD	1100 LB/ACRE
STEP 2	STRAW	STRAW	WHEAT &/OR BARLEY	3 TON/ACRE
STEP 3	HYDROMULCH	FIBER	WOOD	1100 LB/ACRE
		TACKIFIER	PSYLLIUM	140 LB/ACRE

EROSION CONTROL TYPE 3

ITEM	MATERIAL	
	DESCRIPTION	TYPE
ROLLED EROSION CONTROL PRODUCT	EROSION CONTROL BLANKET	A

LEGEND

- X — DRAINAGE SYSTEM No.
- DRAINAGE UNIT
- ROCK SLOPE PROTECTION
- Temp ESA FENCE (TYPE TFESA)
- EROSION CONTROL (COMPOST BLANKET)
- EROSION CONTROL (HYDROSEED)
- ROLLED EROSION CONTROL PRODUCT (BLANKET)
- IMPORTED TOPSOIL

SEED MIX

SEED	BOTANICAL NAME (COMMON NAME)	PERCENT GERMINATION (MINIMUM)	POUNDS PURE LIVE SEED PER ACRE (SLOPE MEASUREMENT)
MIX 1	BROMUS CARINATUS [1] (CALIFORNIA BROME)	50	40
	FESTUCA RUBRA SUBSP. RUBRA [1] (CREEPING RED FESCUE)	55	20
	ELYMUS X TRITICUM (REGREEN)	75	80
	ESCHSCHOLZIA CALIFORNICA, 'MARITIMA' [1] (COASTAL CALIFORNIA POPPY)	40	4

[1] SEED PRODUCED IN CALIFORNIA ONLY.

EROSION CONTROL LEGEND
ECL-1

REVISED BY | DATE REVISED
LAURA LAZZAROTTO
CALCULATED-DESIGNED BY | CHECKED BY
SENIOR LANDSCAPE ARCHITECT
RON FLORY
STATE OF CALIFORNIA - DEPARTMENT OF TRANSPORTATION
Caltrans
03-DESIGN

LAST REVISION 00-00-00
DATE PLOTTED => 07-AUG-2013
TIME PLOTTED => 14:59

Dist	COUNTY	ROUTE	POST MILES TOTAL PROJECT	SHEET No.	TOTAL SHEETS
01	Men	128	Var	88	106

Laura Lazzarotto
LICENSED LANDSCAPE ARCHITECT

6-24-13
PLANS APPROVAL DATE

LICENSED LANDSCAPE ARCHITECT
Laura Lazzarotto
Signature
8-31-13
Renewal Date
6-24-13
Date
STATE OF CALIFORNIA

THE STATE OF CALIFORNIA OR ITS OFFICERS OR AGENTS SHALL NOT BE RESPONSIBLE FOR THE ACCURACY OR COMPLETENESS OF SCANNED COPIES OF THIS PLAN SHEET.

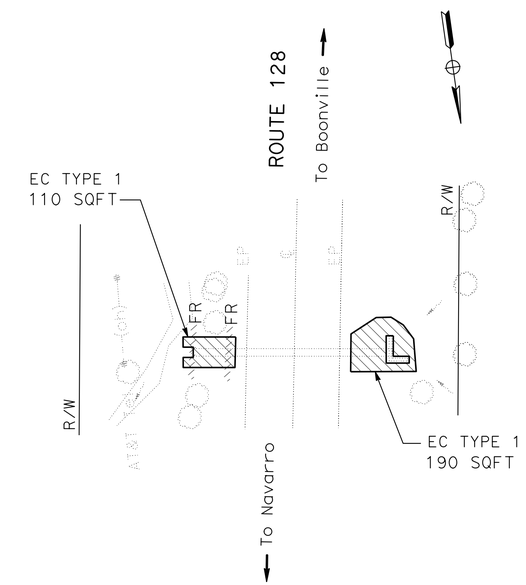

DRAINAGE SYSTEM 2
ROUTE 128
PM 14.39

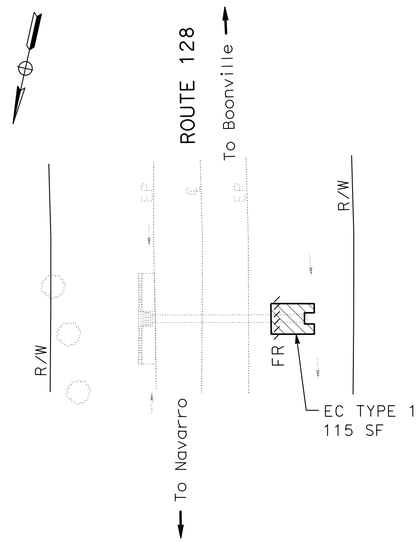

DRAINAGE SYSTEM 4
ROUTE 128
PM 14.67

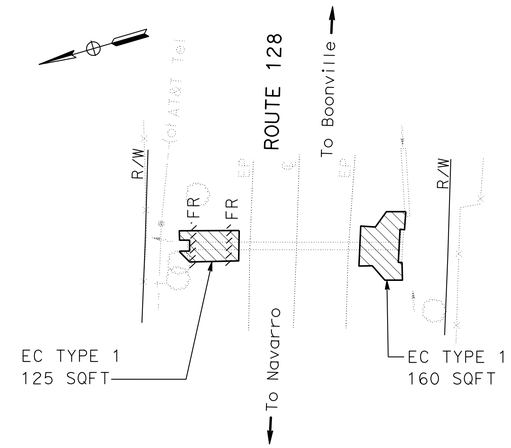

DRAINAGE SYSTEM 6
ROUTE 128
PM 14.98

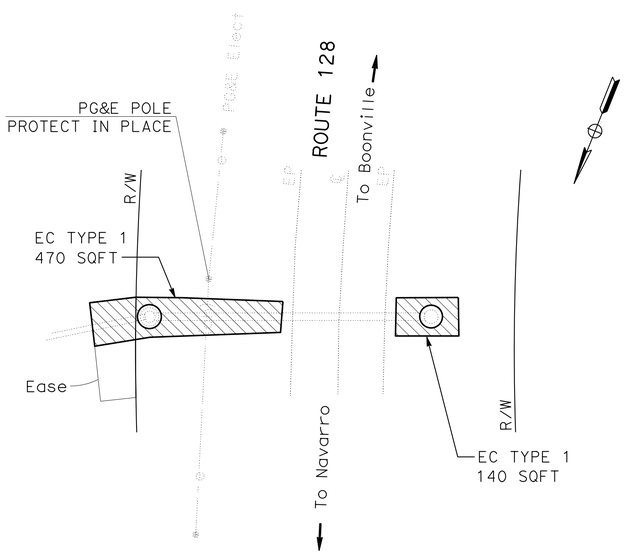

DRAINAGE SYSTEM 1
ROUTE 128
PM 14.30

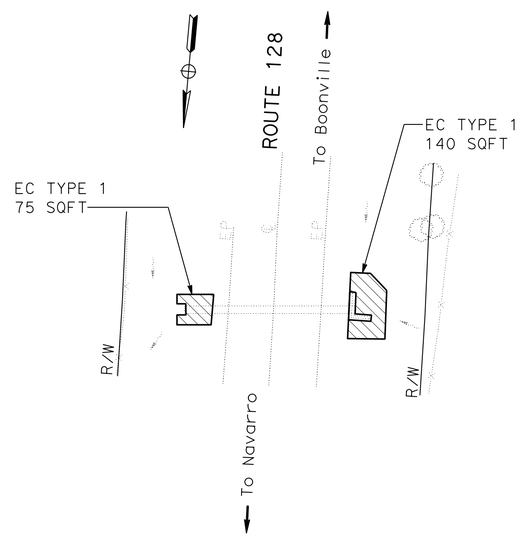

DRAINAGE SYSTEM 3
ROUTE 128
PM 14.61

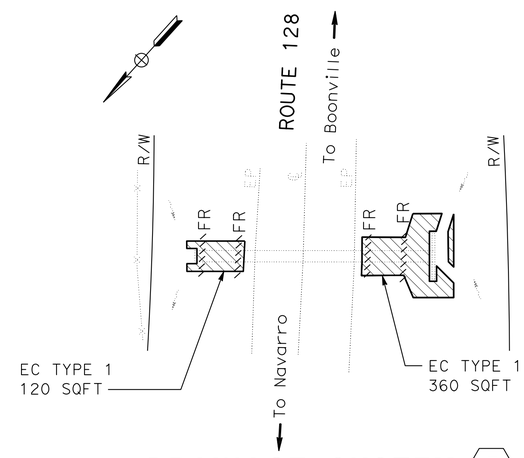

DRAINAGE SYSTEM 5
ROUTE 128
PM 14.80

EROSION CONTROL PLAN
SCALE: 1" = 20'

EC-1

STATE OF CALIFORNIA - DEPARTMENT OF TRANSPORTATION
Caltrans®
03-DESIGN
SENIOR LANDSCAPE ARCHITECT: RON FLORY
LAURA LAZZAROTTO
CALCULATED-DESIGNED BY
CHECKED BY
REVISED BY
DATE REVISED

LAST REVISION 00-00-00
DATE PLOTTED => 07-AUG-2013
TIME PLOTTED => 14:59

Dist	COUNTY	ROUTE	POST MILES TOTAL PROJECT	SHEET No.	TOTAL SHEETS
01	Men	128	Var	89	106

Laura Lazzarotto
LICENSED LANDSCAPE ARCHITECT

6-24-13
PLANS APPROVAL DATE

LICENSED LANDSCAPE ARCHITECT
Laura Lazzarotto
Signature
Laura Lazzarotto
8-31-13
Renewal Date
6-24-13
Date
STATE OF CALIFORNIA

THE STATE OF CALIFORNIA OR ITS OFFICERS OR AGENTS SHALL NOT BE RESPONSIBLE FOR THE ACCURACY OR COMPLETENESS OF SCANNED COPIES OF THIS PLAN SHEET.

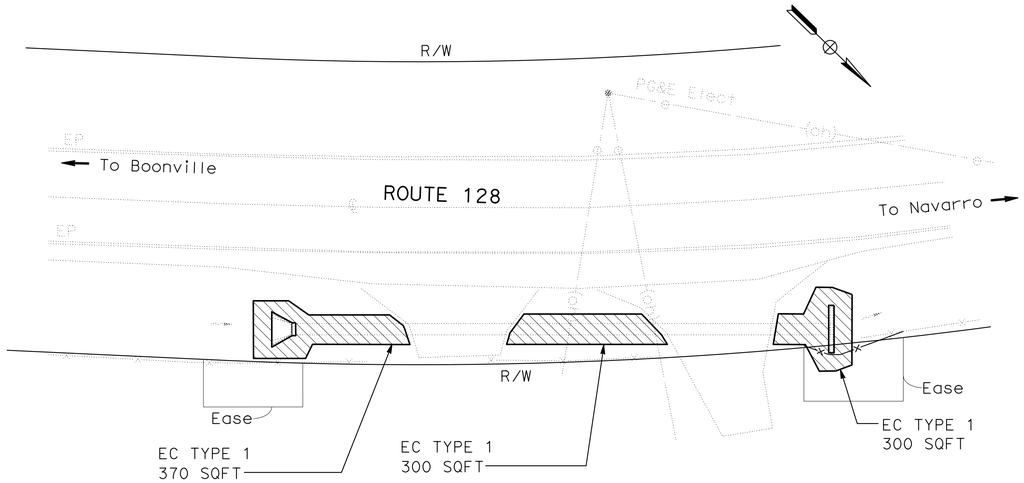

DRAINAGE SYSTEM 8
ROUTE 128
PM 15.14 (DRIVEWAYS)

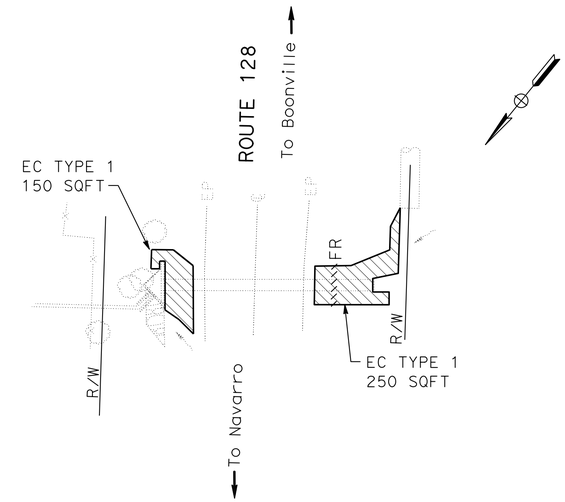

DRAINAGE SYSTEM 10
ROUTE 128
PM 15.90

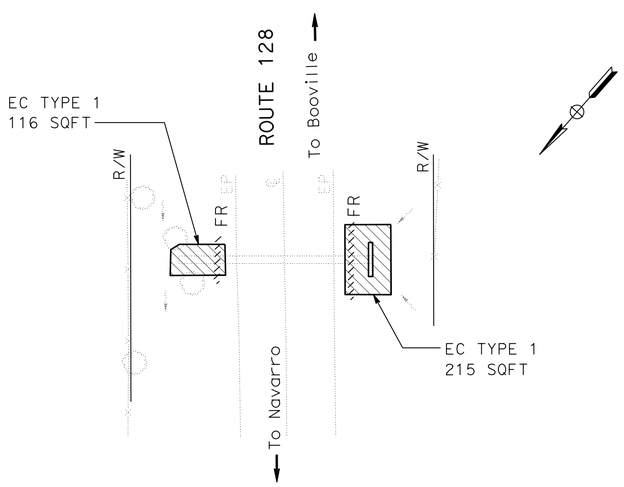

DRAINAGE SYSTEM 7
ROUTE 128
PM 15.14

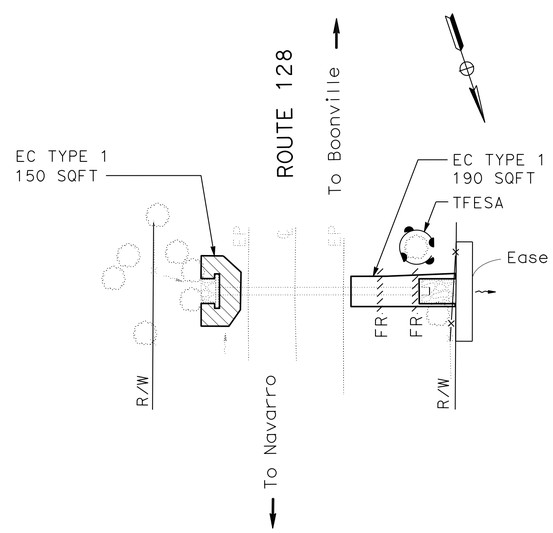

DRAINAGE SYSTEM 9
ROUTE 128
PM 15.62

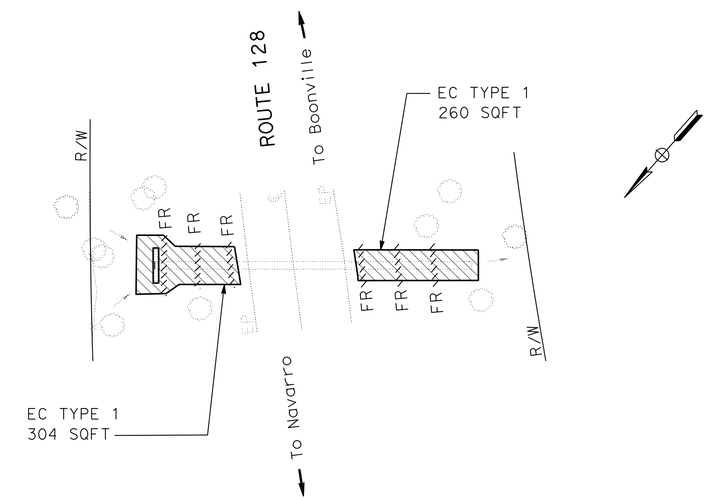

DRAINAGE SYSTEM 11
ROUTE 128
PM 16.63

EROSION CONTROL PLAN
SCALE: 1" = 20'

EC-2

STATE OF CALIFORNIA - DEPARTMENT OF TRANSPORTATION
Caltrans
03-DESIGN
SENIOR LANDSCAPE ARCHITECT: RON FLORY
CALCULATED-DESIGNED BY: LAURA LAZZAROTTO
CHECKED BY
REVISED BY
DATE REVISED

LAST REVISION 00-00-00
DATE PLOTTED => 07-AUG-2013
TIME PLOTTED => 14:59

Dist	COUNTY	ROUTE	POST MILES TOTAL PROJECT	SHEET No.	TOTAL SHEETS
01	Men	128	Var	90	106

Laura Lazzarotto
LICENSED LANDSCAPE ARCHITECT

6-24-13
PLANS APPROVAL DATE

LICENSED LANDSCAPE ARCHITECT
Laura Lazzarotto
Signature
Laura Lazzarotto
8-31-13
Renewal Date
6-24-13
Date
STATE OF CALIFORNIA

THE STATE OF CALIFORNIA OR ITS OFFICERS OR AGENTS SHALL NOT BE RESPONSIBLE FOR THE ACCURACY OR COMPLETENESS OF SCANNED COPIES OF THIS PLAN SHEET.

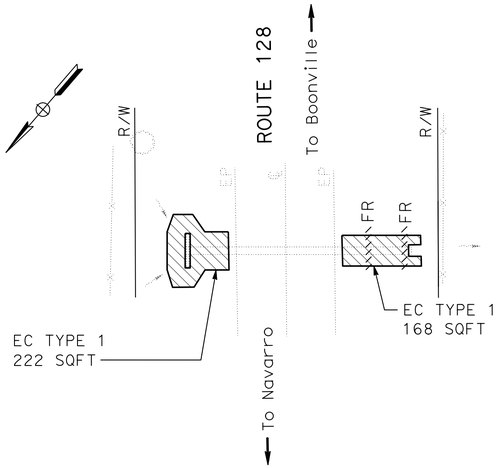

DRAINAGE SYSTEM 13
ROUTE 128
PM 16.91

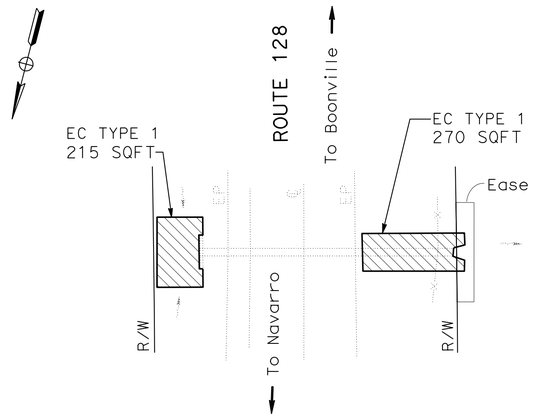

DRAINAGE SYSTEM 15
ROUTE 128
PM 17.22

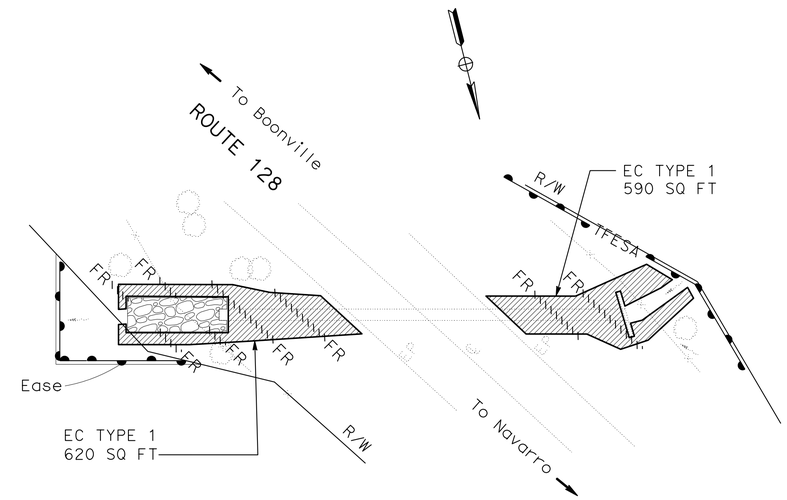

DRAINAGE SYSTEM 16
ROUTE 128
PM 17.51

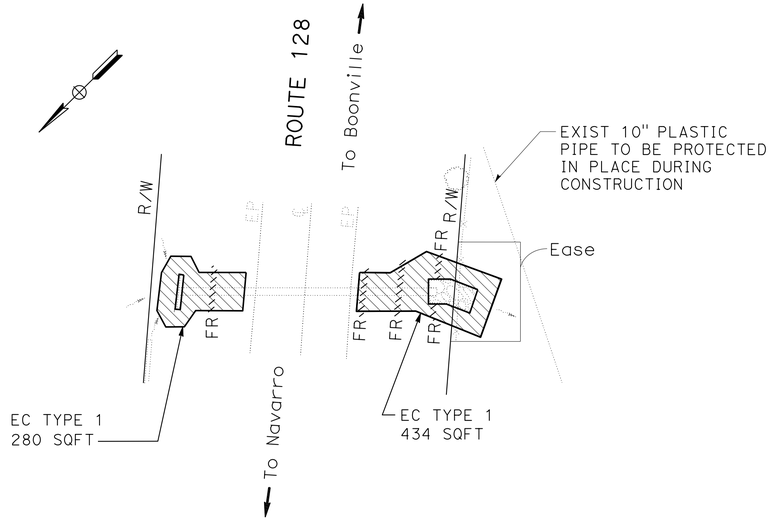

DRAINAGE SYSTEM 12
ROUTE 128
PM 16.88

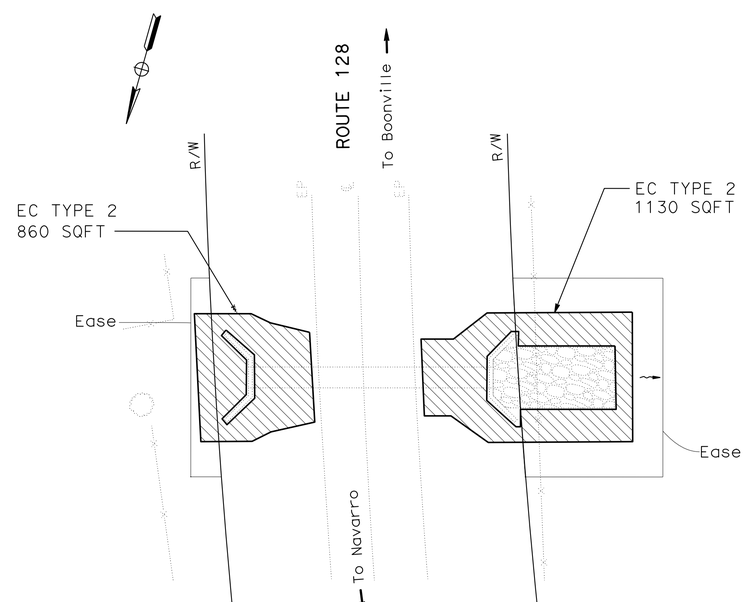

DRAINAGE SYSTEM 14
ROUTE 128
PM 17.11

EROSION CONTROL PLAN
SCALE: 1" = 20'

EC-3

STATE OF CALIFORNIA - DEPARTMENT OF TRANSPORTATION
Caltrans®
03-DESIGN
SENIOR LANDSCAPE ARCHITECT: RON FLORY
CALCULATED-DESIGNED BY: LAURA LAZZAROTTO
CHECKED BY
REVISED BY
DATE REVISED

LAST REVISION 00-00-00
DATE PLOTTED => 07-AUG-2013
TIME PLOTTED => 14:59

Dist	COUNTY	ROUTE	POST MILES TOTAL PROJECT	SHEET No.	TOTAL SHEETS
01	Men	128	Var	91	106

Laura Lazzarotto
LICENSED LANDSCAPE ARCHITECT

6-24-13
PLANS APPROVAL DATE

LICENSED LANDSCAPE ARCHITECT
Laura Lazzarotto
Signature
8-31-03
Renewal Date
6-24-13
Date
STATE OF CALIFORNIA

THE STATE OF CALIFORNIA OR ITS OFFICERS OR AGENTS SHALL NOT BE RESPONSIBLE FOR THE ACCURACY OR COMPLETENESS OF SCANNED COPIES OF THIS PLAN SHEET.

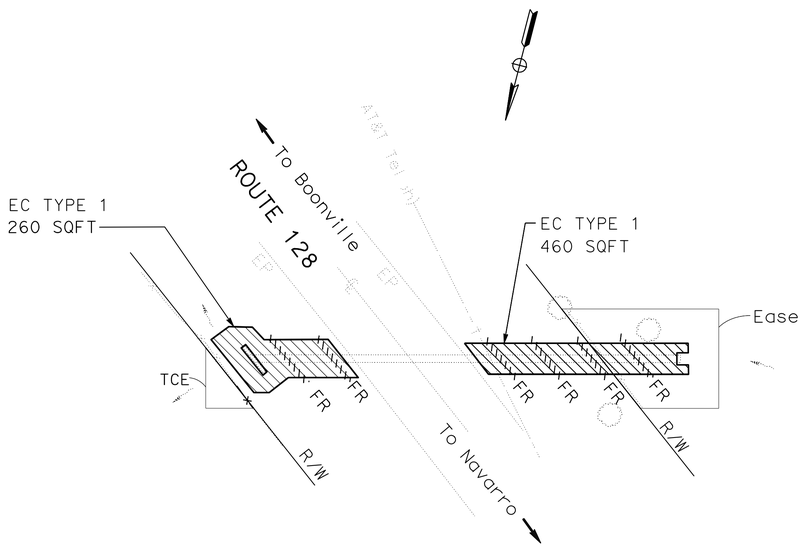

DRAINAGE SYSTEM 18
ROUTE 128
PM 18.28

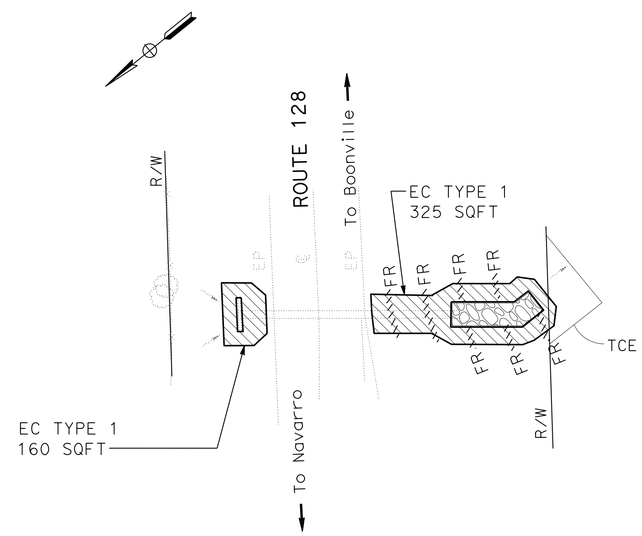

DRAINAGE SYSTEM 20
ROUTE 128
PM 18.88

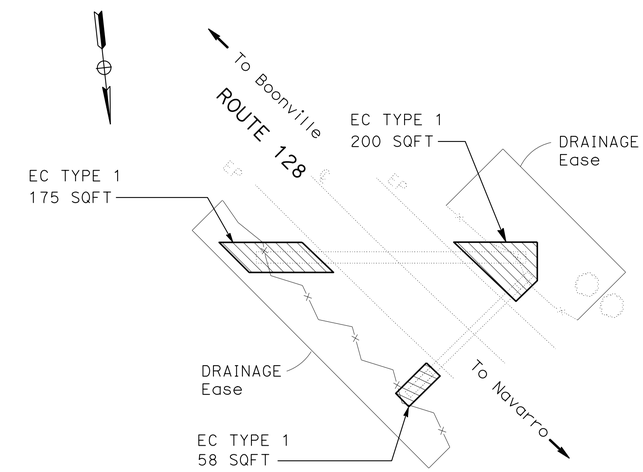

DRAINAGE SYSTEM 22
ROUTE 128
PM 19.36

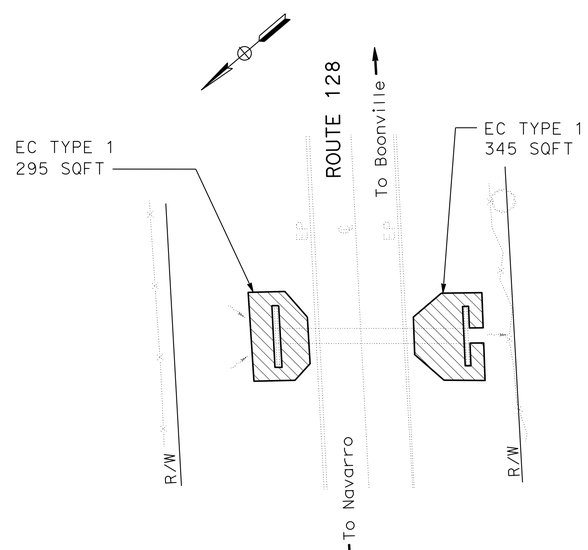

DRAINAGE SYSTEM 19
ROUTE 128
PM 18.46

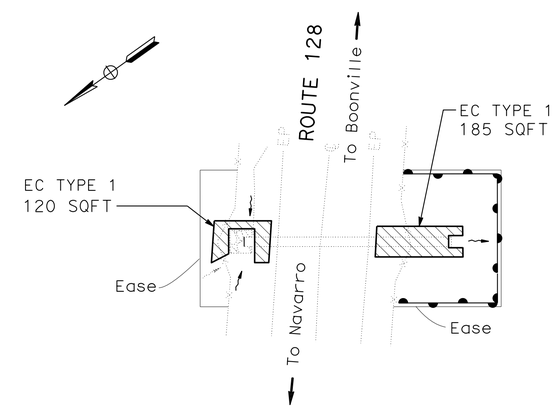

DRAINAGE SYSTEM 21
ROUTE 128
PM 19.30

EROSION CONTROL PLAN
SCALE: 1" = 20'

EC-4

REVISED BY	DATE REVISED
LAURA LAZZAROTTO	

CALCULATED-DESIGNED BY	CHECKED BY
SENIOR LANDSCAPE ARCHITECT	
RON FLORY	

STATE OF CALIFORNIA - DEPARTMENT OF TRANSPORTATION
Caltrans
03-DESIGN

LAST REVISION 00-00-00 | DATE PLOTTED => 07-AUG-2013 | TIME PLOTTED => 14:59

Dist	COUNTY	ROUTE	POST MILES TOTAL PROJECT	SHEET No.	TOTAL SHEETS
01	Men	128	Var	92	106

Laura Lazzarotto
LICENSED LANDSCAPE ARCHITECT

6-24-13
PLANS APPROVAL DATE

LICENSED LANDSCAPE ARCHITECT
Laura Lazzarotto
Signature
8-31-13
Renewal Date
6-24-13
Date
STATE OF CALIFORNIA

THE STATE OF CALIFORNIA OR ITS OFFICERS OR AGENTS SHALL NOT BE RESPONSIBLE FOR THE ACCURACY OR COMPLETENESS OF SCANNED COPIES OF THIS PLAN SHEET.

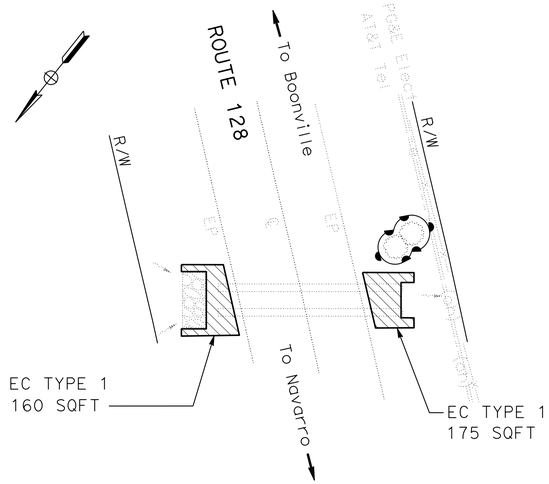

DRAINAGE SYSTEM 24
ROUTE 128
PM 21.23
SCALE: 1" = 20'

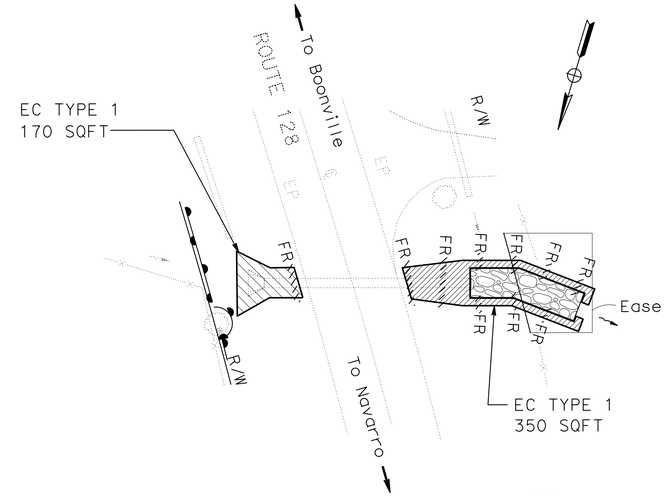

DRAINAGE SYSTEM 26
ROUTE 128
PM 21.96

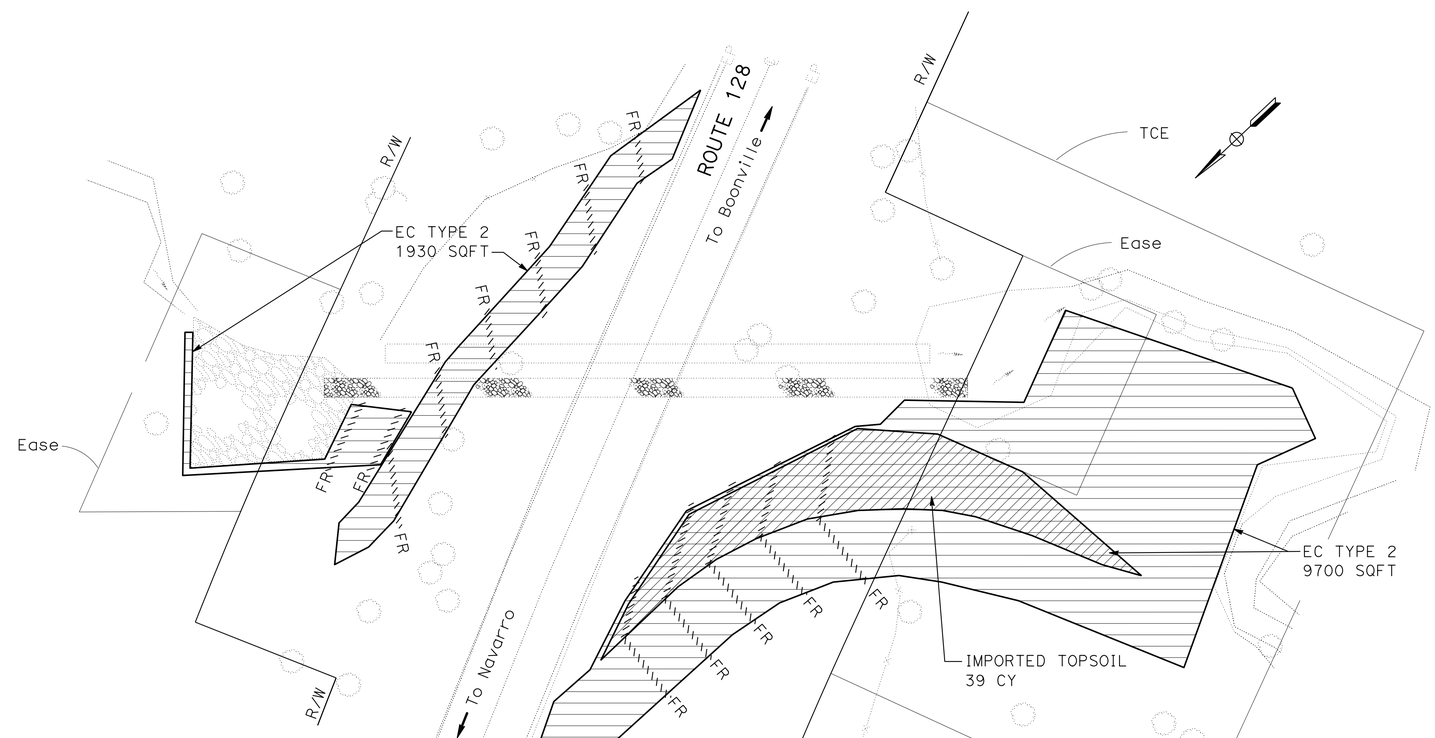

DRAINAGE SYSTEM 25
ROUTE 128
PM 21.80

EROSION CONTROL PLAN
SCALE: 1" = 20'

EC-5

STATE OF CALIFORNIA - DEPARTMENT OF TRANSPORTATION
Caltrans
03-DESIGN
SENIOR LANDSCAPE ARCHITECT: RON FLORY
CALCULATED-DESIGNED BY: LAURA LAZZAROTTO
CHECKED BY
REVISED BY
DATE REVISED

LAST REVISION 00-00-00
DATE PLOTTED => 07-AUG-2013
TIME PLOTTED => 14:59

Dist	COUNTY	ROUTE	POST MILES TOTAL PROJECT	SHEET No.	TOTAL SHEETS
01	Men	128	Var	93	106

Laura Lazzarotto
LICENSED LANDSCAPE ARCHITECT

6-24-13
PLANS APPROVAL DATE

LICENSED LANDSCAPE ARCHITECT
Laura Lazzarotto
Signature
8-31-13
Renewal Date
6-24-13
Date
STATE OF CALIFORNIA

THE STATE OF CALIFORNIA OR ITS OFFICERS OR AGENTS SHALL NOT BE RESPONSIBLE FOR THE ACCURACY OR COMPLETENESS OF SCANNED COPIES OF THIS PLAN SHEET.

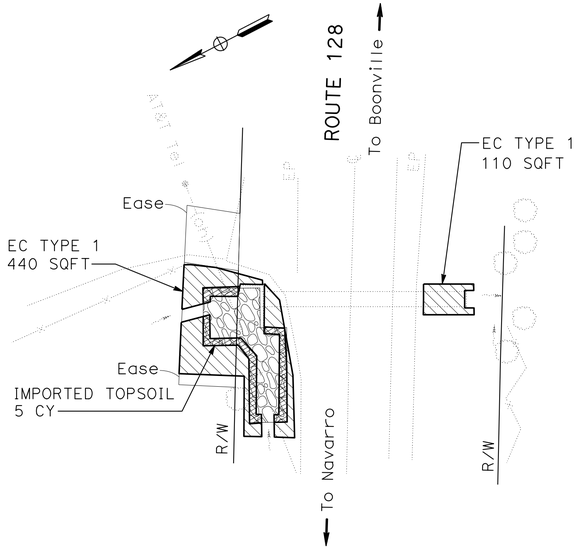

DRAINAGE SYSTEM 28
ROUTE 128
PM 22.97

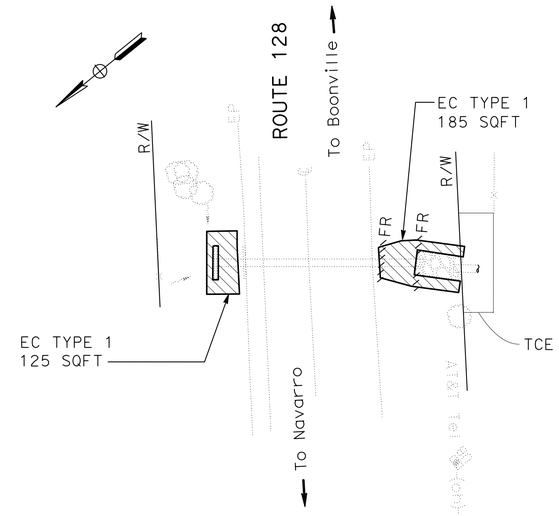

DRAINAGE SYSTEM 30
ROUTE 128
PM 24.55

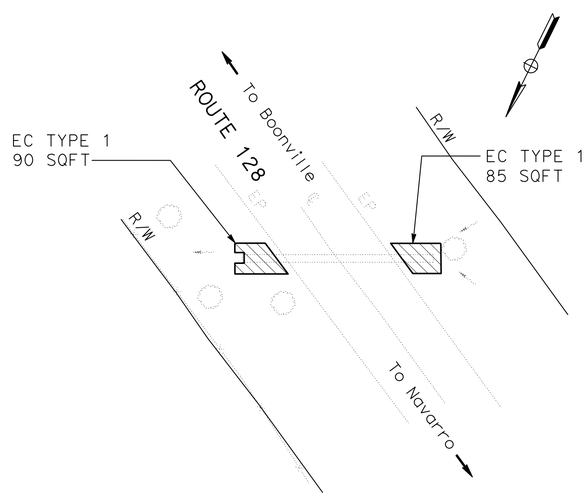

DRAINAGE SYSTEM 27
ROUTE 128
PM 22.83

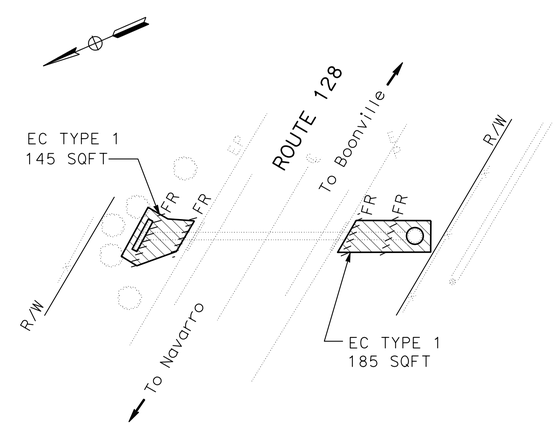

DRAINAGE SYSTEM 29
ROUTE 128
PM 23.75

EROSION CONTROL PLAN
SCALE: 1" = 20'

EC-6

STATE OF CALIFORNIA - DEPARTMENT OF TRANSPORTATION
Caltrans®
03-DESIGN

SENIOR LANDSCAPE ARCHITECT: RON FLORY
CALCULATED-DESIGNED BY: LAURA LAZZAROTTO
CHECKED BY
REVISED BY
DATE REVISED

LAST REVISION 00-00-00
DATE PLOTTED => 07-AUG-2013
TIME PLOTTED => 14:59

Dist	COUNTY	ROUTE	POST MILES TOTAL PROJECT	SHEET No.	TOTAL SHEETS
01	Men	128	Var	94	106

Laura Lazzarotto
LICENSED LANDSCAPE ARCHITECT

6-24-13
PLANS APPROVAL DATE

LICENSED LANDSCAPE ARCHITECT
Laura Lazzarotto
Signature
8-31-13
Renewal Date
6-24-13
Date
STATE OF CALIFORNIA

THE STATE OF CALIFORNIA OR ITS OFFICERS OR AGENTS SHALL NOT BE RESPONSIBLE FOR THE ACCURACY OR COMPLETENESS OF SCANNED COPIES OF THIS PLAN SHEET.

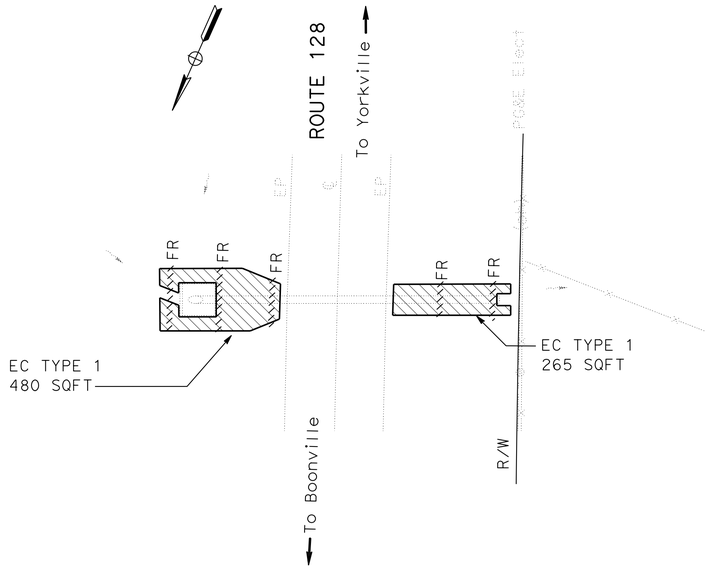

DRAINAGE SYSTEM 32
ROUTE 128
PM 30.06

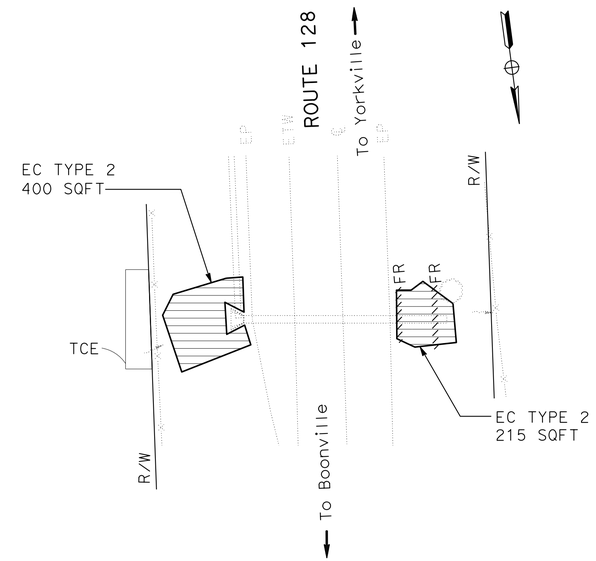

DRAINAGE SYSTEM 34
ROUTE 128
PM 30.82

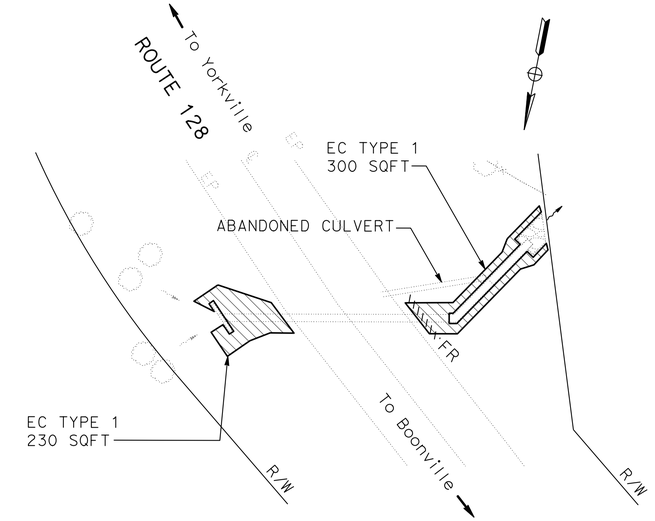

DRAINAGE SYSTEM 35
ROUTE 128
PM 30.94

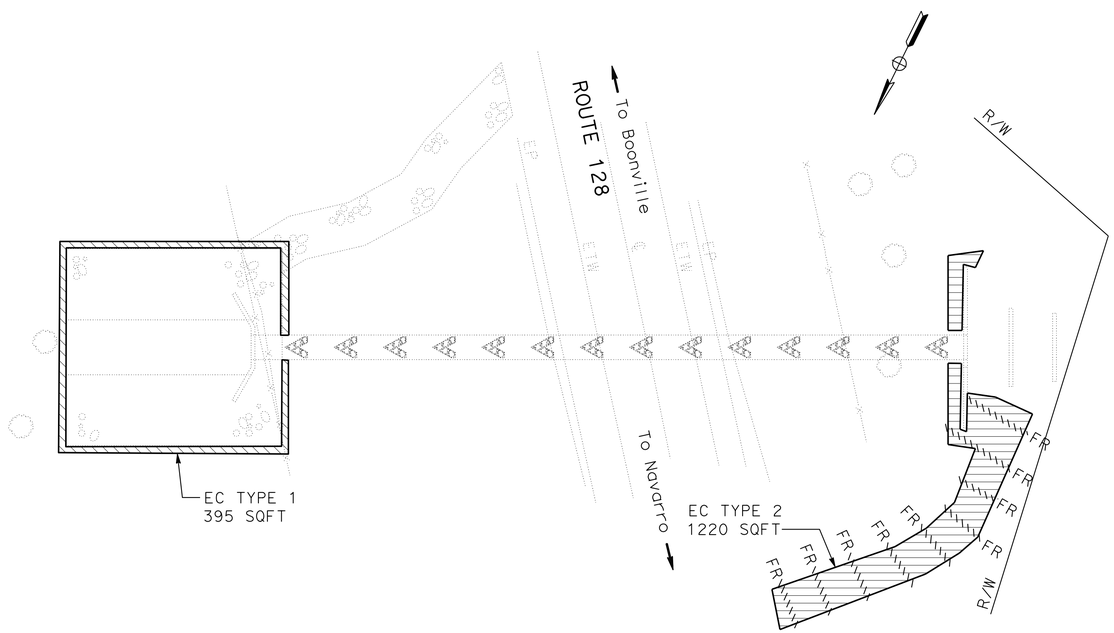

DRAINAGE SYSTEM 31
ROUTE 128
PM 27.54

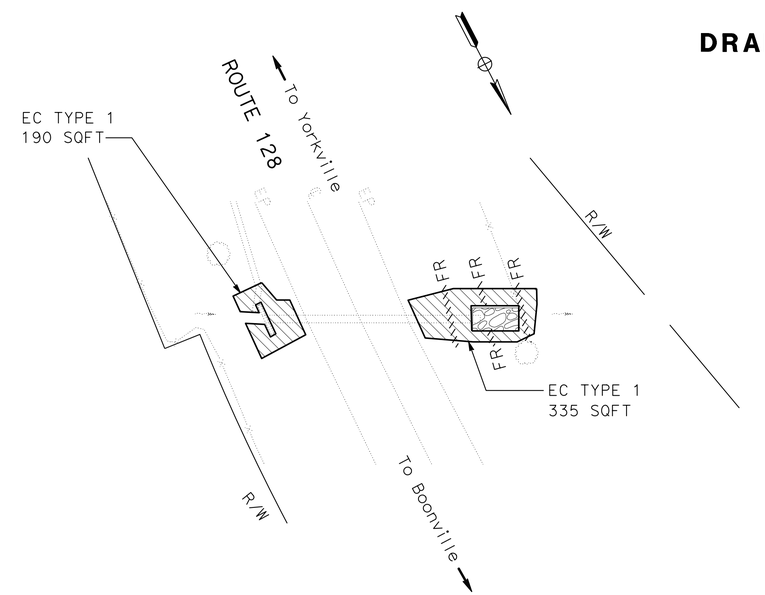

DRAINAGE SYSTEM 33
ROUTE 128
PM 30.75

EROSION CONTROL PLAN
SCALE: 1" = 20'

EC-7

STATE OF CALIFORNIA - DEPARTMENT OF TRANSPORTATION
Caltrans®
03-DESIGN
SENIOR LANDSCAPE ARCHITECT: RON FLORY
LAURA LAZZAROTTO
REVISED BY | DATE REVISED
CALCULATED-DESIGNED BY | CHECKED BY

LAST REVISION 00-00-00
DATE PLOTTED => 07-AUG-2013
TIME PLOTTED => 14:59

Dist	COUNTY	ROUTE	POST MILES TOTAL PROJECT	SHEET No.	TOTAL SHEETS
01	Men	128	Var	95	106

Laura Lazzarotto
LICENSED LANDSCAPE ARCHITECT

6-24-13
PLANS APPROVAL DATE

LICENSED LANDSCAPE ARCHITECT
Laura Lazzarotto
Signature
8-31-13
Renewal Date
6-24-13
Date
STATE OF CALIFORNIA

THE STATE OF CALIFORNIA OR ITS OFFICERS OR AGENTS SHALL NOT BE RESPONSIBLE FOR THE ACCURACY OR COMPLETENESS OF SCANNED COPIES OF THIS PLAN SHEET.

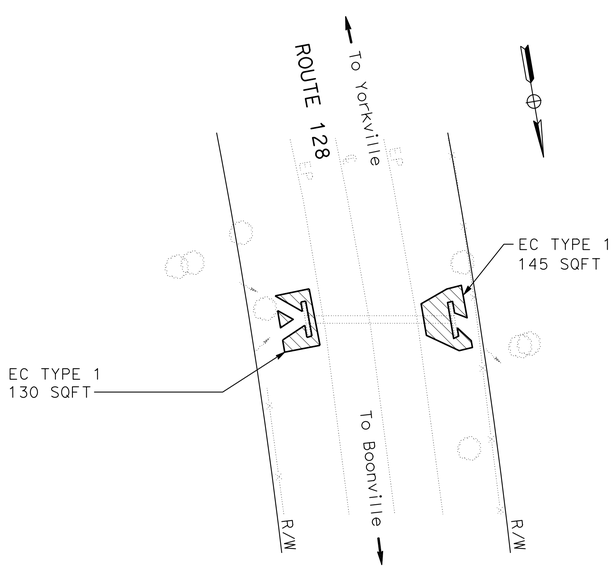

DRAINAGE SYSTEM 37
ROUTE 128
PM 31.84

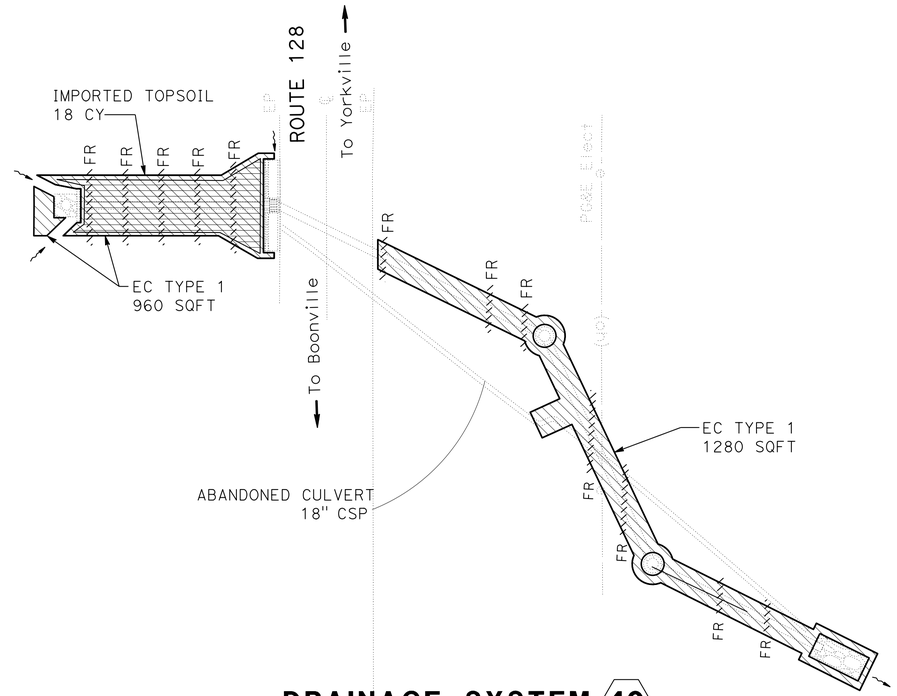

DRAINAGE SYSTEM 40
ROUTE 128
PM 33.23

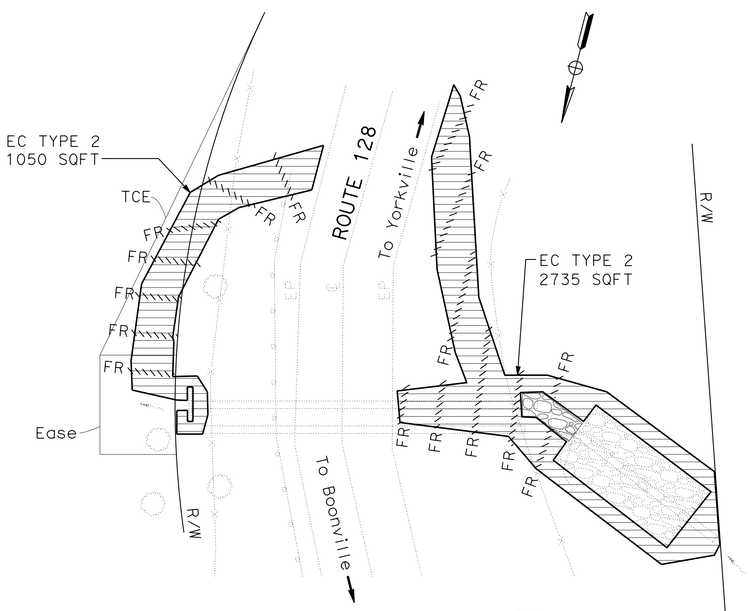

DRAINAGE SYSTEM 36
ROUTE 128
PM 30.97

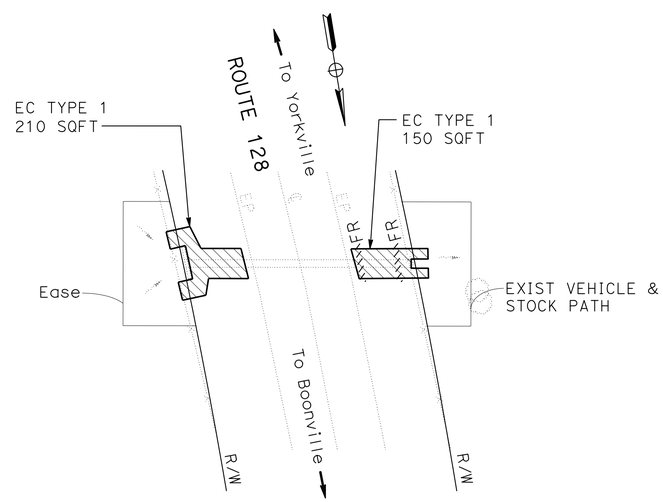

DRAINAGE SYSTEM 38
ROUTE 128
PM 31.86

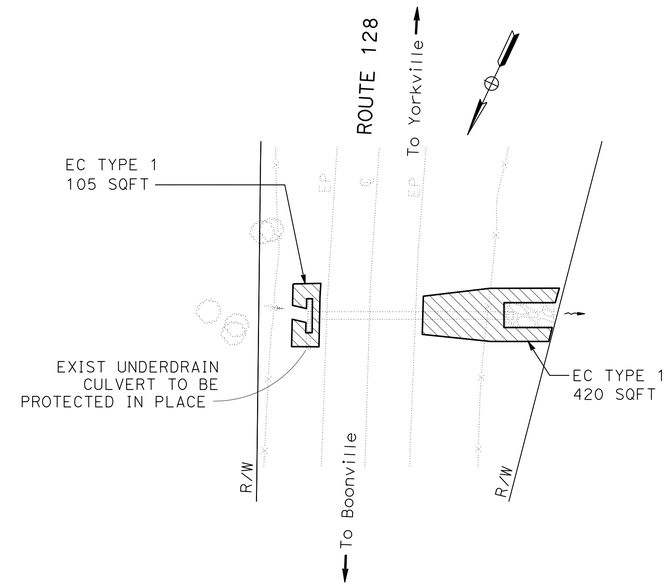

DRAINAGE SYSTEM 39
ROUTE 128
PM 32.01

EROSION CONTROL PLAN
SCALE: 1" = 20'

EC-8

REVISED BY	DATE REVISED

CALCULATED-DESIGNED BY: LAURA LAZZAROTTO
CHECKED BY
SENIOR LANDSCAPE ARCHITECT: RON FLORY

STATE OF CALIFORNIA - DEPARTMENT OF TRANSPORTATION
Caltrans®
03-DESIGN

LAST REVISION 00-00-00
DATE PLOTTED => 07-AUG-2013
TIME PLOTTED => 14:59

Dist	COUNTY	ROUTE	POST MILES TOTAL PROJECT	SHEET No.	TOTAL SHEETS
01	Men	128	Var	96	106

Laura Lazzarotto
LICENSED LANDSCAPE ARCHITECT

6-24-13
PLANS APPROVAL DATE

LICENSED LANDSCAPE ARCHITECT
Laura Lazzarotto
Lic. No. 4192
8-31-13
Renewal Date
6-24-13
Date
STATE OF CALIFORNIA

THE STATE OF CALIFORNIA OR ITS OFFICERS OR AGENTS SHALL NOT BE RESPONSIBLE FOR THE ACCURACY OR COMPLETENESS OF SCANNED COPIES OF THIS PLAN SHEET.

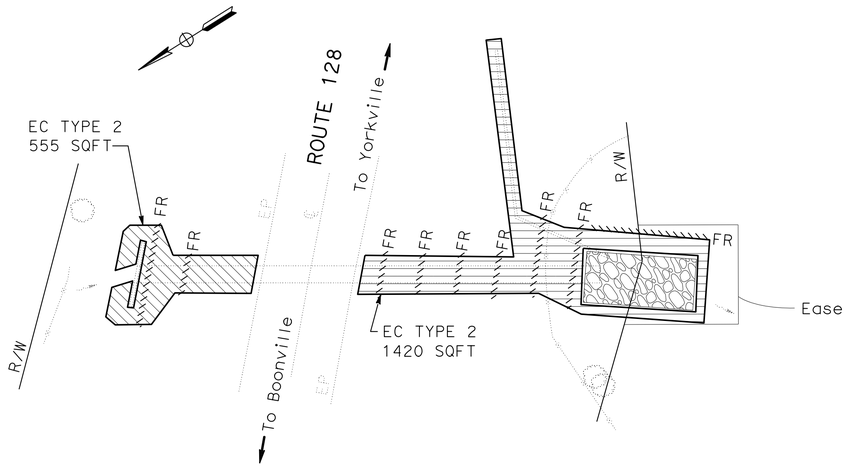

DRAINAGE SYSTEM 42
ROUTE 128
PM 33.78

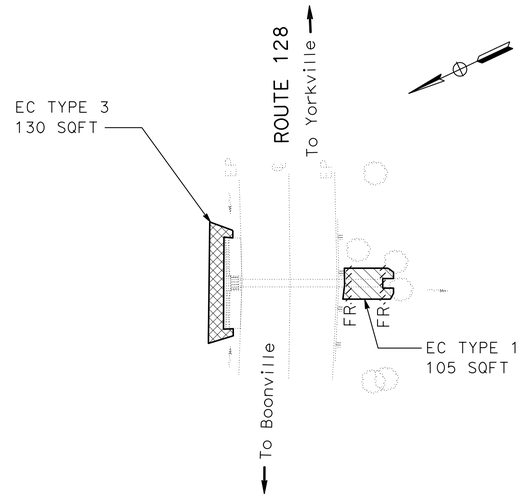

DRAINAGE SYSTEM 43
ROUTE 128
PM 36.01

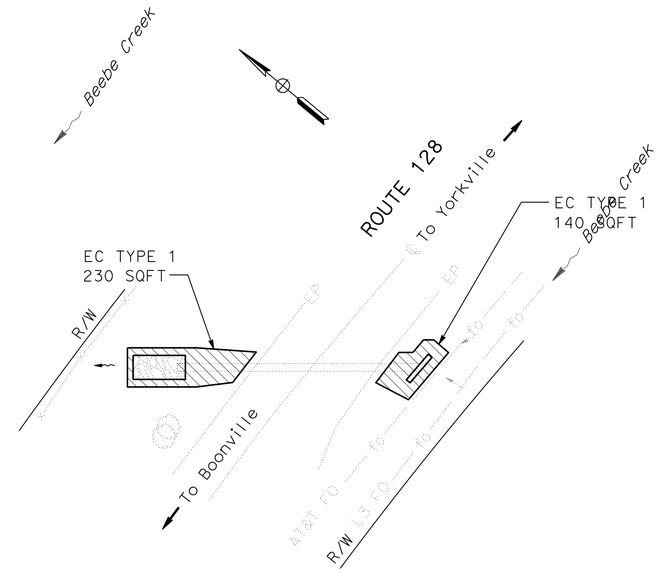

DRAINAGE SYSTEM 46
ROUTE 128
PM 39.22

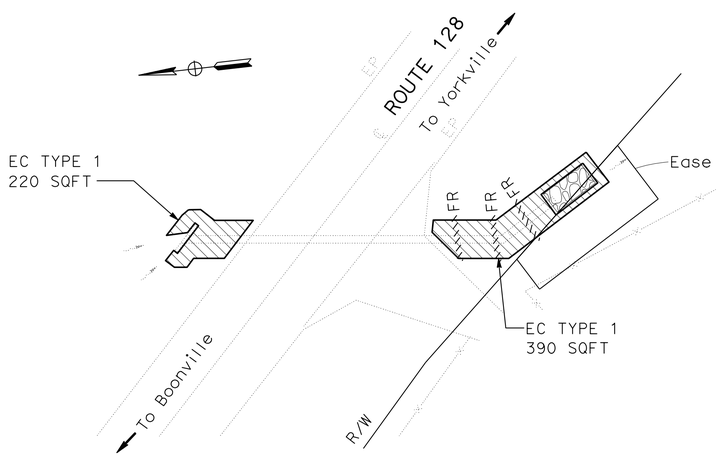

DRAINAGE SYSTEM 41
ROUTE 128
PM 33.70

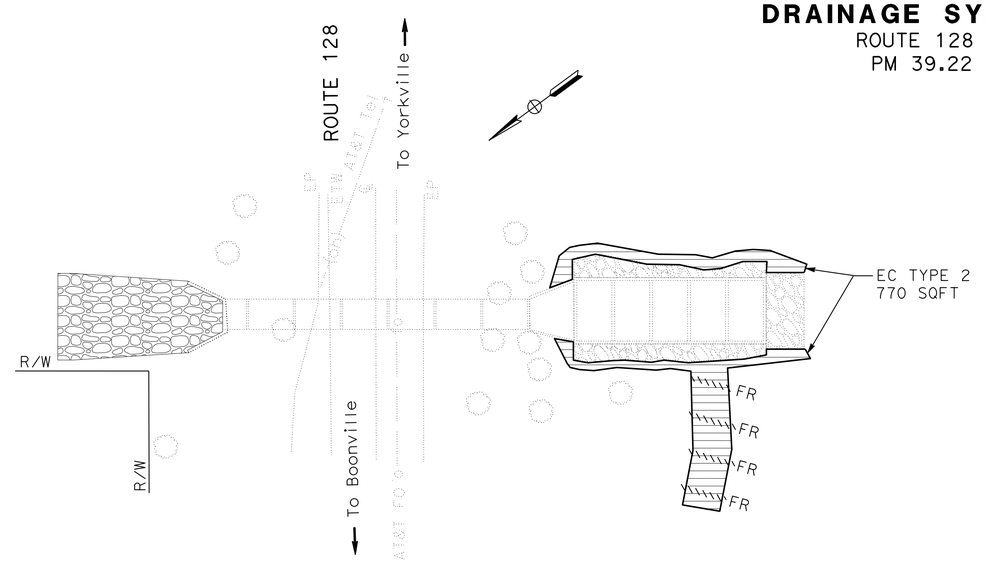

DRAINAGE SYSTEM 44
ROUTE 128
PM 36.63

EROSION CONTROL PLAN

SCALE: 1" = 20'

EC-9

STATE OF CALIFORNIA - DEPARTMENT OF TRANSPORTATION
Caltrans®
03-DESIGN

SENIOR LANDSCAPE ARCHITECT: RON FLORY
CALCULATED-DESIGNED BY: LAURA LAZZAROTTO
CHECKED BY
REVISED BY
DATE REVISED

LAST REVISION 00-00-00
DATE PLOTTED => 07-AUG-2013
TIME PLOTTED => 14:59

Dist	COUNTY	ROUTE	POST MILES TOTAL PROJECT	SHEET No.	TOTAL SHEETS
01	Men	128	Var	97	106

Laura Lazzarotto
LICENSED LANDSCAPE ARCHITECT

6-24-13
PLANS APPROVAL DATE

LICENSED LANDSCAPE ARCHITECT
Laura Lazzarotto
Signature
8-31-13
Renewal Date
6-24-13
Date
STATE OF CALIFORNIA

THE STATE OF CALIFORNIA OR ITS OFFICERS OR AGENTS SHALL NOT BE RESPONSIBLE FOR THE ACCURACY OR COMPLETENESS OF SCANNED COPIES OF THIS PLAN SHEET.

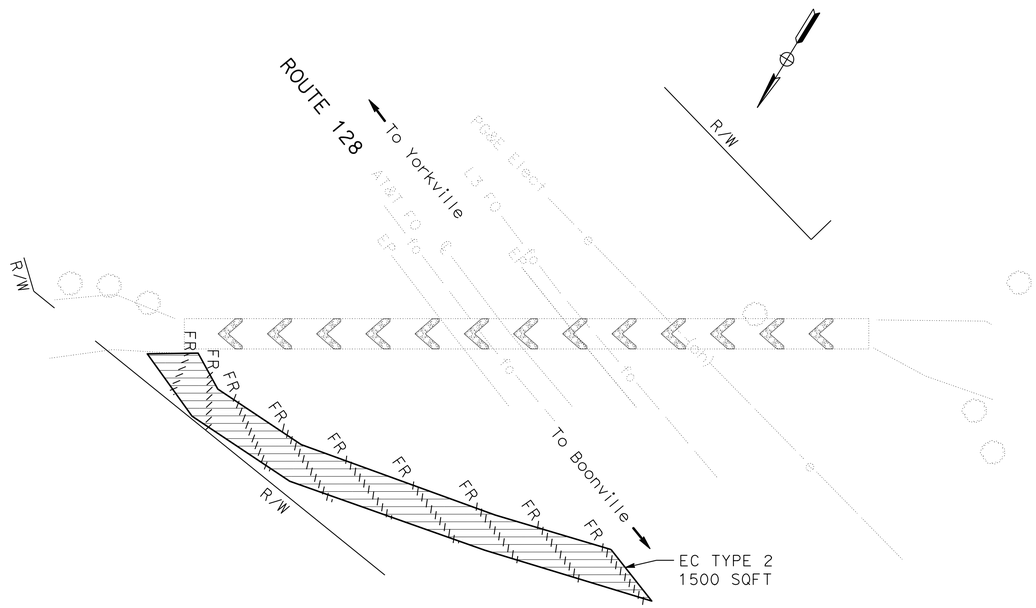

DRAINAGE SYSTEM 48
ROUTE 128
PM 39.88

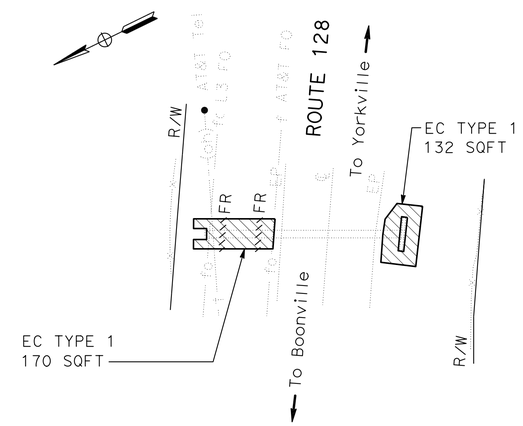

DRAINAGE SYSTEM 50
ROUTE 128
PM 40.63

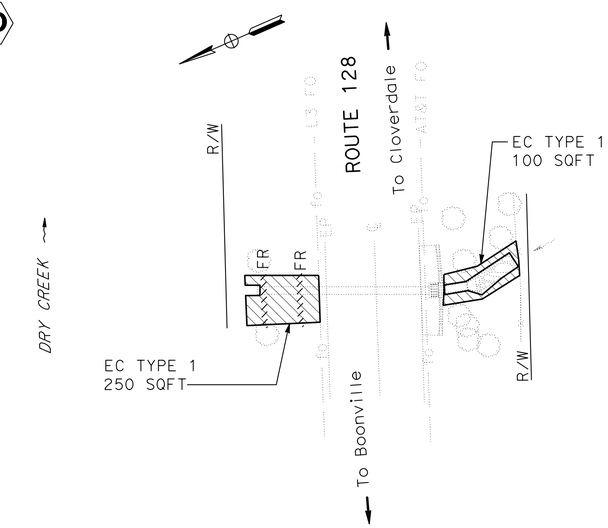

DRAINAGE SYSTEM 51
ROUTE 128
PM 41.38

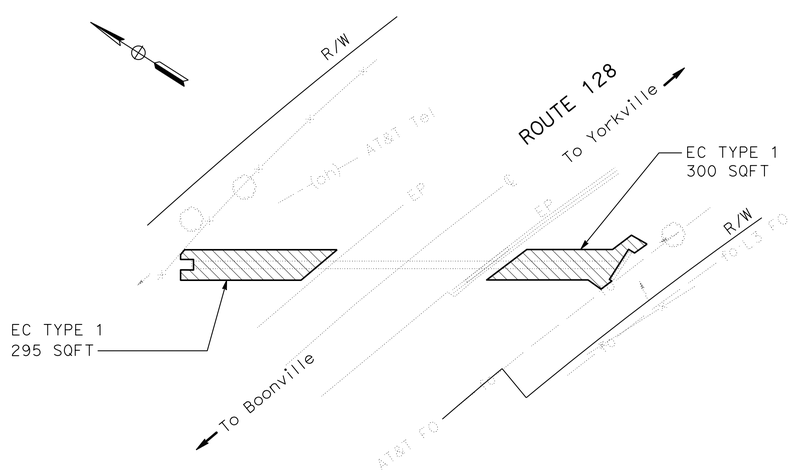

DRAINAGE SYSTEM 47
ROUTE 128
PM 39.28

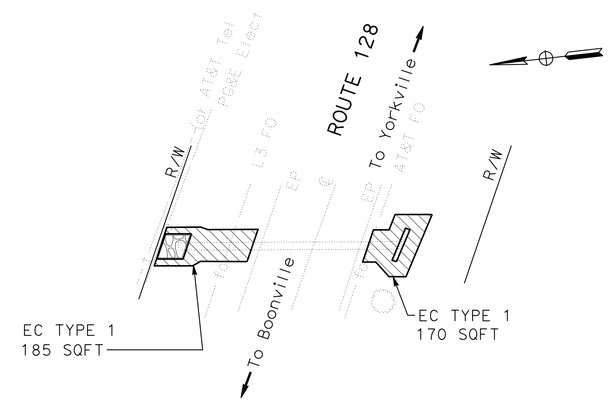

DRAINAGE SYSTEM 49
ROUTE 128
PM 40.24

EROSION CONTROL PLAN
SCALE: 1" = 20'

EC-10

STATE OF CALIFORNIA - DEPARTMENT OF TRANSPORTATION
Caltrans
03-DESIGN
SENIOR LANDSCAPE ARCHITECT: RON FLORY
LAURA LAZZAROTTO
CALCULATED-DESIGNED BY
CHECKED BY
REVISED BY
DATE REVISED

LAST REVISION 00-00-00
DATE PLOTTED => 07-AUG-2013
TIME PLOTTED => 14:59

Dist	COUNTY	ROUTE	POST MILES TOTAL PROJECT	SHEET No.	TOTAL SHEETS
01	Men	128	Var	98	106

Laura Lazzarotto
LICENSED LANDSCAPE ARCHITECT

6-24-13
PLANS APPROVAL DATE

LICENSED LANDSCAPE ARCHITECT
Laura Lazzarotto
Lic. No. 4242
8-31-13
Renewal Date
6-24-13
Date
STATE OF CALIFORNIA

THE STATE OF CALIFORNIA OR ITS OFFICERS OR AGENTS SHALL NOT BE RESPONSIBLE FOR THE ACCURACY OR COMPLETENESS OF SCANNED COPIES OF THIS PLAN SHEET.

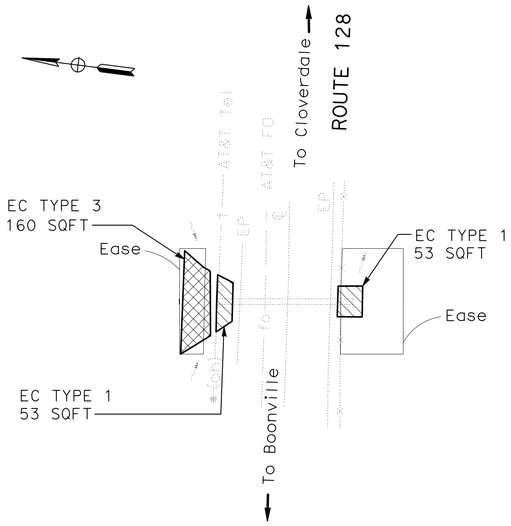

DRAINAGE SYSTEM 53
ROUTE 128
PM 45.25

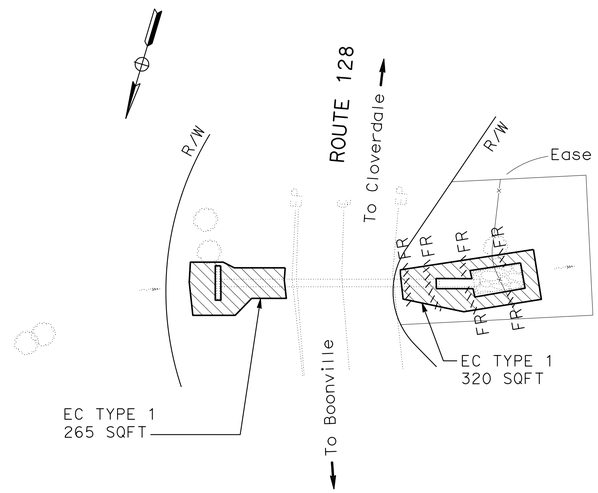

DRAINAGE SYSTEM 56
ROUTE 128
PM 49.28

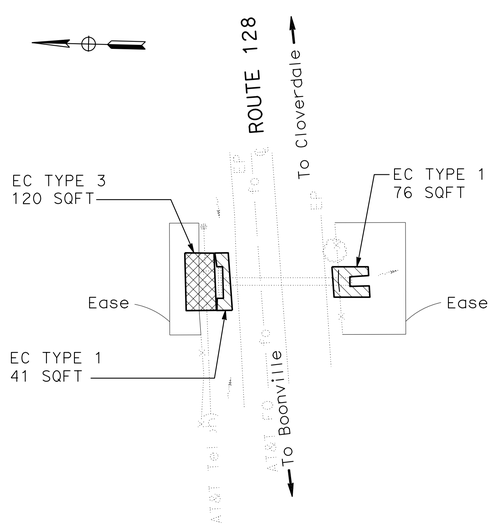

DRAINAGE SYSTEM 52
ROUTE 128
PM 45.21

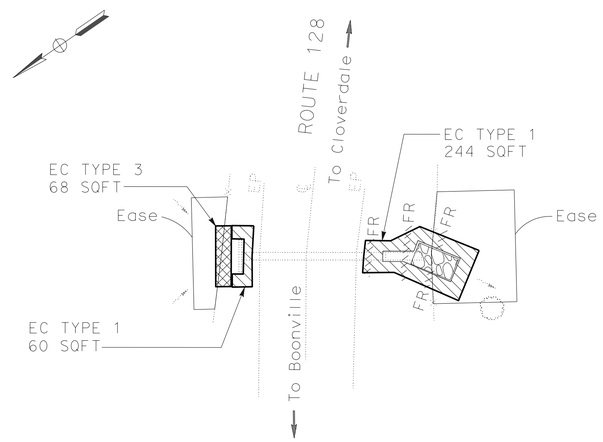

DRAINAGE SYSTEM 55
ROUTE 128
PM 45.91

EROSION CONTROL PLAN
SCALE: 1" = 20'

EC-11

STATE OF CALIFORNIA - DEPARTMENT OF TRANSPORTATION
Caltrans®
03-DESIGN

SENIOR LANDSCAPE ARCHITECT: RON FLORY
CALCULATED-DESIGNED BY: LAURA LAZZAROTTO
CHECKED BY
REVISED BY
DATE REVISED

LAST REVISION 00-00-00
DATE PLOTTED => 07-AUG-2013
TIME PLOTTED => 14:59

EROSION CONTROL QUANTITIES

DRAINAGE SYSTEM NO.	AREA	AREA	AREA	DESCRIPTION	COMPOST (SQFT)	EC DRY SEED (SQFT)	HYDROSEED (SQFT)	HYDROMULCH (SQFT)	ROLLED EROSION CONT. PRODUCT (BLANKET)	FIBER ROLLS	IMPORTED TOPSOIL	COMPOST	PURE LIVE SEED
	SQFT	SQFT LT	SQFT RT		SQFT	SQFT	SQFT	SQFT	SQFT	LF	CY	CY	LBS
	(N)	(N)	(N)									(N)	(N)
1	610	470	140	EC TYPE 1	610	610						3.8	2.0
2	300	110	190	EC TYPE 1	300	300				18		1.9	1.0
3	215	75	140	EC TYPE 1	215	215						1.3	0.7
4	115	–	115	EC TYPE 1	115	115				9		0.7	0.4
5	480	120	360	EC TYPE 1	480	480				40		3.0	1.6
6	285	125	160	EC TYPE 1	285	285				18		1.8	0.9
7	331	116	215	EC TYPE 1	331	331				9		2.0	1.1
8	970	–	–	EC TYPE 1	970	970						6.0	3.2
9	340	150	190	EC TYPE 1	340	340				18		2.1	1.1
10	400	150	250	EC TYPE 1	400	400				9		2.5	1.3
11	654	304	260	EC TYPE 1	564	564				67		3.5	1.9
12	714	280	434	EC TYPE 1	714	714				50		4.4	2.3
13	390	222	168	EC TYPE 1	390	390				18		2.4	1.3
14	1990	860	1130	EC TYPE 2			1990	1990					6.6
15	485	215	270	EC TYPE 1	485	485						3.0	1.6
16	1210	620	590	EC TYPE 1	1210	1210				114		7.5	4.0
17	OMITTED FROM CONTRACT												
18	720	260	460	EC TYPE 1	720	720				79		4.4	2.4
19	640	295	345	EC TYPE 1	640	640						4.0	2.1
20	485	160	325	EC TYPE 1	485	485				58		3.0	1.6
21	305	120	185	EC TYPE 1	305	305						1.9	1.0
22	433	233	200	EC TYPE 1	433	433						2.7	1.4
23	OMITTED FROM CONTRACT												
24	335	160	175	EC TYPE 1	335	335						2.1	1.1
25	11630	1930	9700	EC TYPE 2			11630	11630		362	39	–	38.4
26	520	170	350	EC TYPE 1	520	520				55		3.2	1.7
27	175	90	85	EC TYPE 1	175	175						1.1	0.6
28	550	440	110	EC TYPE 1	550	550					5	3.4	1.8
29	330	145	185	EC TYPE 1	330	330				47		2.0	1.1
30	310	125	185	EC TYPE 1	310	310				18		1.9	1.0
31	1615	395	–	EC TYPE 1	395	395						2.4	1.3
		–	1220	EC TYPE 2			1220	1220		128		–	4.0
32	745	480	265	EC TYPE 1	745	745				66		4.6	2.5
33	525	190	335	EC TYPE 1	525	525				40		3.2	1.7
34	615	400	215	EC TYPE 2			615	615				–	2.0
35	530	230	300	EC TYPE 1	530	530				14		3.3	1.8
36	3785	1050	2735	EC TYPE 2			3785	3785		260		–	12.5
37	275	130	145	EC TYPE 1	275	275						1.7	0.9
38	360	210	150	EC TYPE 1	360	360				18		2.2	1.2
39	525	105	420	EC TYPE 1	525	525						3.2	1.7
40	2240	960	1280	EC TYPE 1	2240	2240				176	18	13.8	7.4
41	610	220	390	EC TYPE 1	610	610				38		3.8	2.0
42	2000	580	1420	EC TYPE 2			2000	2000		166		–	6.6
43	235	130	–	EC TYPE 3					130			–	–
		–	105	EC TYPE 1	105	105				18		0.6	0.3
44	770	–	770	EC TYPE 2			770	770		50		–	2.5
45	OMITTED FROM CONTRACT												
46	370	230	140	EC TYPE 1	370	370						2.3	1.2
47	595	295	300	EC TYPE 1	595	595						3.7	2.0
48	1500	1500	–	EC TYPE 2			1500	1500		173		–	5.0
49	355	185	170	EC TYPE 1	355	355						2.2	1.2
50	302	170	132	EC TYPE 1	302	302				18		1.9	1.0

NOTE: (N) DENOTES NON PAY ITEM, FOR INFORMATION ONLY

Dist	COUNTY	ROUTE	POST MILES TOTAL PROJECT	SHEET No.	TOTAL SHEETS
01	Men	128	Var	99	106

LICENSED LANDSCAPE ARCHITECT

6-24-13
PLANS APPROVAL DATE

THE STATE OF CALIFORNIA OR ITS OFFICERS OR AGENTS SHALL NOT BE RESPONSIBLE FOR THE ACCURACY OR COMPLETENESS OF SCANNED COPIES OF THIS PLAN SHEET.

LICENSED LANDSCAPE ARCHITECT — LAURA LAZZAROTTO — STATE OF CALIFORNIA — Signature — 8-31-13 Renewal Date — 6-24-13 Date

LEGEND:

- X — DRAINAGE SYSTEM No.
- × — DRAINAGE UNIT
- ROCK SLOPE PROTECTION
- Temp FENCE (TYPE ESA)
- FR — FIBER ROLL
- EROSION CONTROL (COMPOST BLANKET)
- EROSION CONTROL (HYDROSEED)
- ROLLED EROSION CONTROL PRODUCT (BLANKET)
- IMPORTED TOPSOIL

REVISED BY | DATE REVISED
LAURA LAZZAROTTO
CALCULATED-DESIGNED BY | CHECKED BY
SENIOR LANDSCAPE ARCHITECT
RON FLORY

STATE OF CALIFORNIA - DEPARTMENT OF TRANSPORTATION
Caltrans
03-DESIGN

EROSION CONTROL QUANTITIES
ECQ-1

LAST REVISION 00-00-00 | DATE PLOTTED => 07-AUG-2013 | TIME PLOTTED => 14:59

EROSION CONTROL QUANTITIES

DRAINAGE SYSTEM NO.	AREA	AREA	AREA	DESCRIPTION	COMPOST (SQFT)	EC DRY SEED (SQFT)	HYDROSEED (SQFT)	HYDROMULCH (SQFT)	ROLLED EROSION CONT. PRODUCT (BLANKET)	FIBER ROLLS	IMPORTED TOPSOIL	COMPOST	PURE LIVE SEED
	SQFT	SQFT LT	SQFT RT		SQFT	SQFT	SQFT	SQFT	SQFT	LF	CY	CY	LBS
	(N)	(N)	(N)									(N)	(N)
51	350	250	100	EC TYPE 1	350	350				28		2.2	1.2
52	237	41	—	EC TYPE 1	41	41						0.3	0.1
		120	—	EC TYPE 3					120			—	—
		—	76	EC TYPE 1	76	76						0.5	0.3
53	266	53	—	EC TYPE 1	53	53						0.3	0.2
		160	—	EC TYPE 3					160			—	—
		—	53	EC TYPE 1	53	53						0.3	0.2
54	OMITTED FROM CONTRACT												
55	372	60	—	EC TYPE 1	60	60						0.4	0.2
		68	—	EC TYPE 3					68			—	—
		—	244	EC TYPE 1	244	244				32		1.5	0.8
56	585	265	320	EC TYPE 1	585	585				45		3.6	1.9
TOTAL	45,594				21,606	21,606	23,510	23,510	478	2,259	62	134	149

NOTE: (N) DENOTES NON PAY ITEM, FOR INFORMATION ONLY

Dist	COUNTY	ROUTE	POST MILES TOTAL PROJECT	SHEET No.	TOTAL SHEETS
01	Men	128	Var	100	106

Laura Lazzarotto
LICENSED LANDSCAPE ARCHITECT

6-24-13
PLANS APPROVAL DATE

LICENSED LANDSCAPE ARCHITECT
LAURA LAZZAROTTO
Laura Lazzarotto
Signature
8-31-13
Renewal Date
6-24-13
Date
STATE OF CALIFORNIA

THE STATE OF CALIFORNIA OR ITS OFFICERS OR AGENTS SHALL NOT BE RESPONSIBLE FOR THE ACCURACY OR COMPLETENESS OF SCANNED COPIES OF THIS PLAN SHEET.

REVISED BY | DATE REVISED

LAURA LAZZAROTTO

CALCULATED-DESIGNED BY | CHECKED BY

SENIOR LANDSCAPE ARCHITECT

RON FLORY

STATE OF CALIFORNIA - DEPARTMENT OF TRANSPORTATION

Caltrans®

03-DESIGN

EROSION CONTROL QUANTITIES
ECQ-2

LAST REVISION 00-00-00

DATE PLOTTED => 07-AUG-2013
TIME PLOTTED => 14:59

Dist	COUNTY	ROUTE	POST MILES TOTAL PROJECT	SHEET No.	TOTAL SHEETS
01	Men	128	Var	101	106

Raymond Don Tsztoo
REGISTERED CIVIL ENGINEER

October 19, 2012
PLANS APPROVAL DATE

REGISTERED PROFESSIONAL ENGINEER
Raymond Don Tsztoo
No. C37332
Exp. 6-30-14
CIVIL
STATE OF CALIFORNIA

THE STATE OF CALIFORNIA OR ITS OFFICERS OR AGENTS SHALL NOT BE RESPONSIBLE FOR THE ACCURACY OR COMPLETENESS OF SCANNED COPIES OF THIS PLAN SHEET.

TO ACCOMPANY PLANS DATED 6-24-13

2010 REVISED STANDARD PLAN RSP A86D

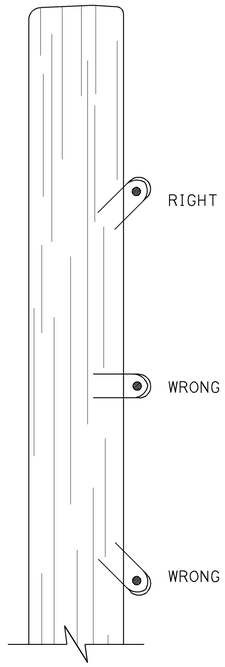

DRIVE STAPLES AT ANGLE

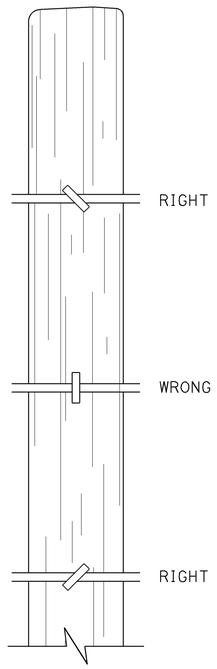

DO NOT DRIVE STAPLES PARALLEL TO SIDE OF POST

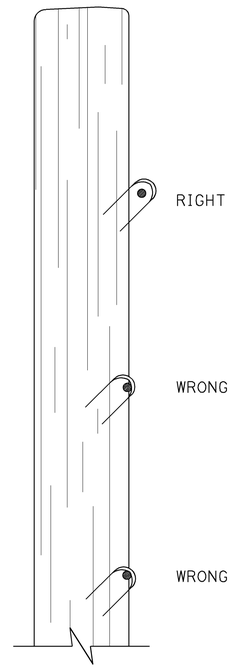

LEAVE WIRE LOOSE IN STAPLE

LINE POST STAPLING DETAILS

(Apply to rectangular/square and round posts)
Do not staple vertical wire in wire mesh.

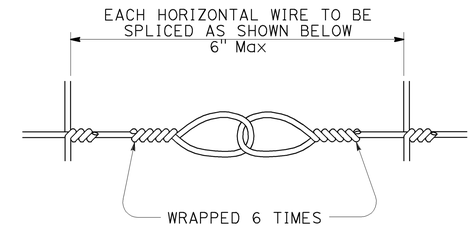

SPLICE DETAIL FOR BARBED WIRE/WIRE MESH FENCE

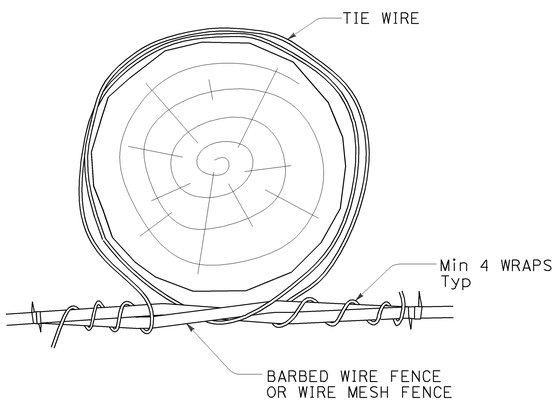

OPTION A

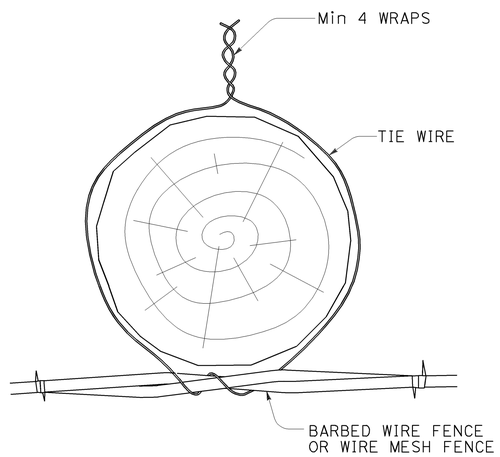

OPTION B

LINE POST WIRE TIE OPTION DETAILS

(Option details also apply to rectangular/square posts)

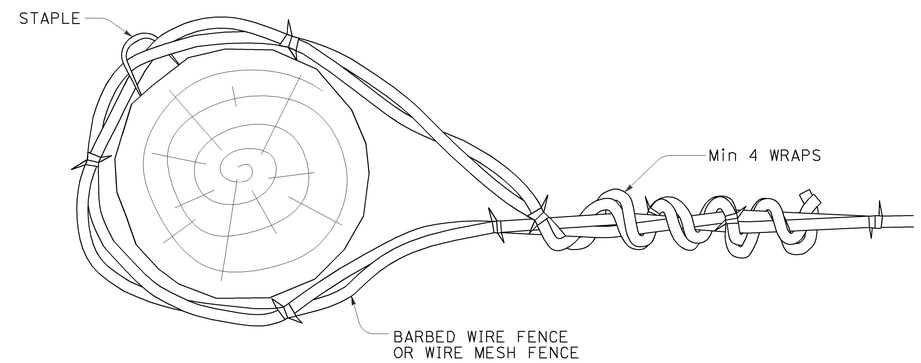

END, LATCH, PULL, AND CORNER POST DETAIL

(Also applies to rectangular/square posts)

STATE OF CALIFORNIA
DEPARTMENT OF TRANSPORTATION

BARBED WIRE AND WIRE MESH FENCE - MISCELLANEOUS DETAILS

NO SCALE

RSP A86D DATED OCTOBER 19, 2012 SUPPLEMENTS THE STANDARD PLANS BOOK DATED 2010.

REVISED STANDARD PLAN RSP A86D

10-9-12

Dist	COUNTY	ROUTE	POST MILES TOTAL PROJECT	SHEET No.	TOTAL SHEETS
01	Men	128	Var	102	106

Raymond Don Tsztoo
REGISTERED CIVIL ENGINEER

April 19, 2013
PLANS APPROVAL DATE

REGISTERED PROFESSIONAL ENGINEER Raymond Don Tsztoo No. C37332 Exp. 6-30-14 CIVIL STATE OF CALIFORNIA

THE STATE OF CALIFORNIA OR ITS OFFICERS OR AGENTS SHALL NOT BE RESPONSIBLE FOR THE ACCURACY OR COMPLETENESS OF SCANNED COPIES OF THIS PLAN SHEET.

TO ACCOMPANY PLANS DATED 6-24-13

2010 REVISED STANDARD PLAN RSP D77A

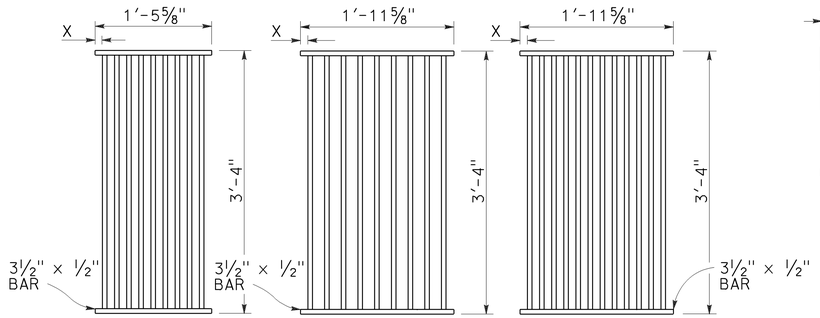

TYPE 18-9

1⅜" Clear spacing. Use within the roadbed on highways where bicycles and pedestrians are excluded.

TYPE 24-9

2" Clear spacing. Use in locations off the roadbed on all types of highways.

TYPE 24-12

1⅜" Clear spacing. Use within the roadbed on highways where bicycles and pedestrians are excluded.

RECTANGULAR GRATE DETAILS

(See table below)

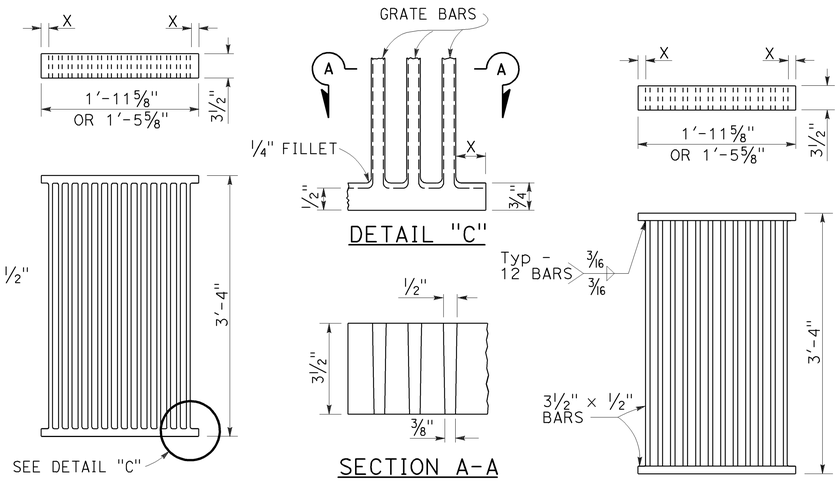

ALTERNATIVE CAST DUCTILE IRON GRATE OR CAST CARBON STEEL GRATE

ALTERNATIVE WELDED GRATE

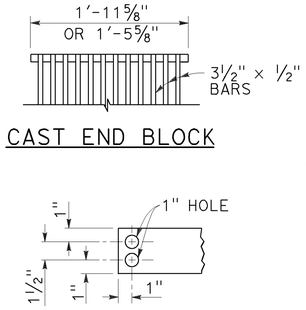

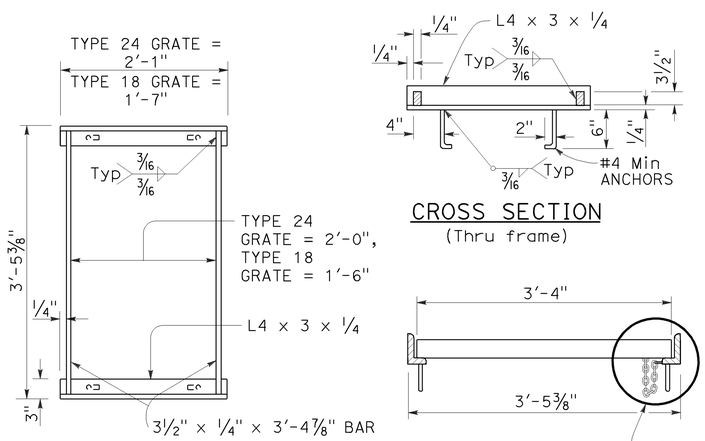

RECTANGULAR FRAME DETAILS

(For all rectangular grates)

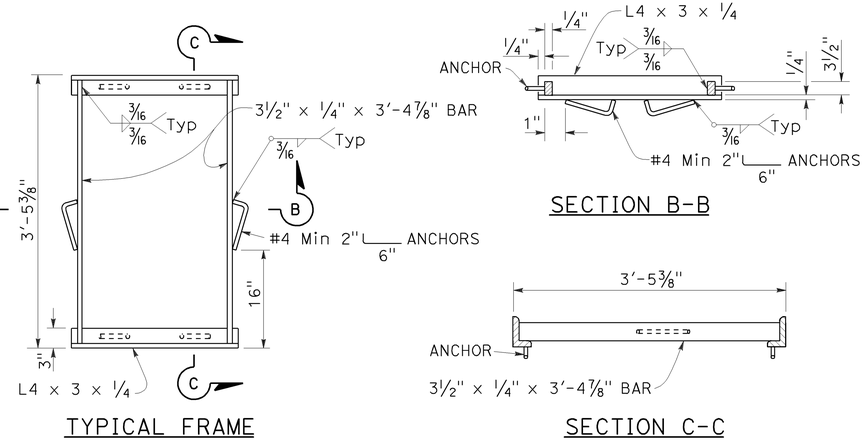

ALTERNATIVE ANCHOR FOR RECTANGULAR FRAME

(For details not shown, See Rectangular Frame Details)

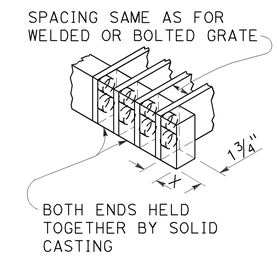

ALTERNATIVE CAST DUCTILE IRON OR CAST CARBON STEEL END BLOCK GRATE

NOTES:

1. Grate type numbers refer to approximate width of grate in inches and number of bars, respectively.
2. Contractor has the option of using cast ductile iron, cast carbon steel, welded, bolted, or cast end block grate.
3. Rounded top of bars optional on all grates.
4. Pipe inlets with a grate shall be placed so that bars parallel direction of principle surface flow.
5. Complete joint penetration butt welds may be substituted for the fillet welds on all anchors.
6. Standard square, hexagon, round or equivalent headed anchors may be substituted for the right angle hooks on the anchors shown on this plan.
7. Grate and frame weights are based on welded grates (weights of face angles, steps, protection bars, etc. are not included).
8. Connect chain to grate and frame only at locations shown on the plans. When chain is required, do not use cast ductile iron grates.

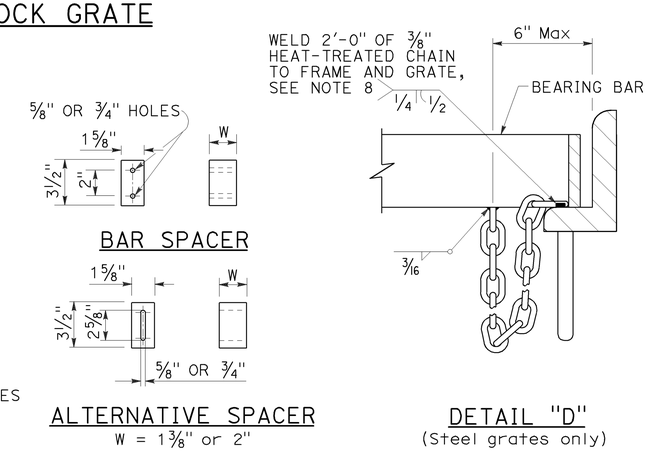

GRATE BAR SPACING TABLE

TYPE	No. OF BARS	CLEAR BAR SPACING	X
18-9	9	1⅜"	1 1/16"
24-9	9	2"	1 9/16"
24-12	12	1⅜"	1¼"

INLET TYPE	COVER TYPE	WEIGHT LB
OS	PLATE	174
OL-7	PLATE	170
OL-10	PLATE	170
OL-14	PLATE	170
OL-21	PLATE	170
OCP	PLATE	112
OCPI	PLATE	112
OCPI	REDWOOD	42
OMP	PLATE	177
OMPI	PLATE	177

INLET TYPE	GRATE TYPE	No. OF GRATES	WEIGHT LB
GDO	24-12	2	634
GOL-7	24-12	1	326
GOL-10	24-12	1	326
GO,G1,G2,G3,G4 (TYPE 24)	24-9	1	263
	24-12	1	326
G4 (TYPE 18),G5,G6	18-9	1	249
GT1	18-9	2	498
GT2	18-9	2	498
GT3	24-12	2	652
GT4	24-12	2	652
TRASH RACK			22
GRATE CHAIN			3

BASIS FOR Misc IRON & STEEL FINAL PAY WEIGHTS FOR DRAINAGE INLETS

(See Note 7)

STATE OF CALIFORNIA
DEPARTMENT OF TRANSPORTATION

GRATE DETAILS No. 1

NO SCALE

RSP D77A DATED APRIL 19, 2013 SUPERSEDES RSP D77A DATED JULY 20, 2012 AND STANDARD PLAN D77A DATED MAY 20, 2011 - PAGE 164 OF THE STANDARD PLANS BOOK DATED 2010.

REVISED STANDARD PLAN RSP D77A

4-4-13

Dist	COUNTY	ROUTE	POST MILES TOTAL PROJECT	SHEET No.	TOTAL SHEETS
01	Men	128	Var	103	106

Raymond Don Tsztoo
REGISTERED CIVIL ENGINEER

April 19, 2013
PLANS APPROVAL DATE

REGISTERED PROFESSIONAL ENGINEER Raymond Don Tsztoo No. C37332 Exp. 6-30-14 CIVIL STATE OF CALIFORNIA

THE STATE OF CALIFORNIA OR ITS OFFICERS OR AGENTS SHALL NOT BE RESPONSIBLE FOR THE ACCURACY OR COMPLETENESS OF SCANNED COPIES OF THIS PLAN SHEET.

TO ACCOMPANY PLANS DATED 6-24-13

2010 REVISED STANDARD PLAN RSP D77B

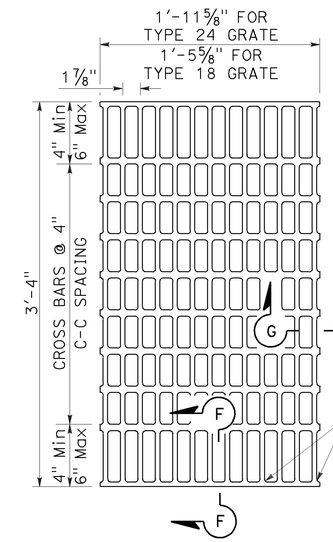

NOTES:

Bearing bars to be 3½" × ¼" bars on 1⅞" centers.

⅜"± ø Cross bars may be fillet welded, resistance welded or electroforged to bearing bars.

Weight of Type 24 grate = 141 LBS.

Weight of Type 18 grate = 107 LBS. (Type 24 grate shown).

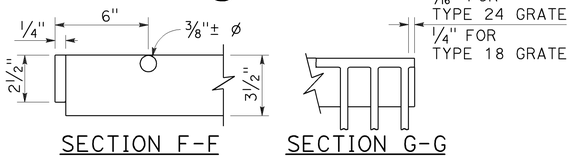

SECTION F-F SECTION G-G

TYPE 18-10 AND 24-13 GRATE

(Welded Steel)

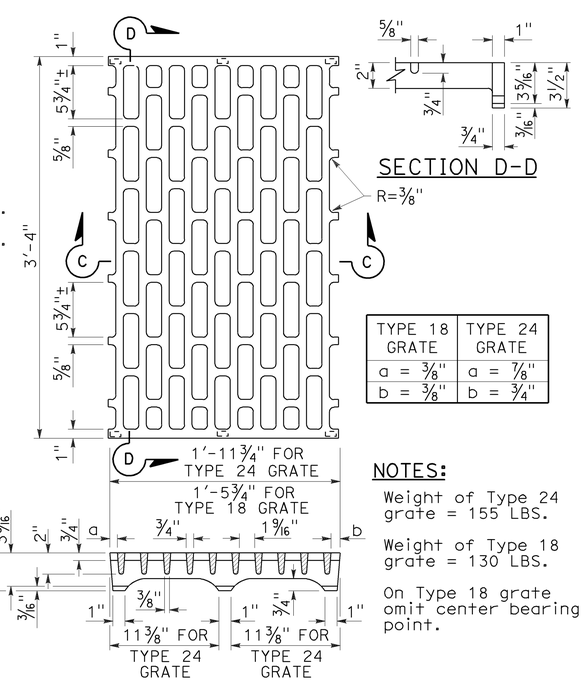

SECTION D-D

TYPE 18 GRATE	TYPE 24 GRATE
a = ⅜"	a = ⅞"
b = ⅜"	b = ¾"

NOTES:

Weight of Type 24 grate = 155 LBS.

Weight of Type 18 grate = 130 LBS.

On Type 18 grate omit center bearing point.

SECTION C-C

TYPE 18-8C AND 24-10C GRATE

(Cast ductile iron)

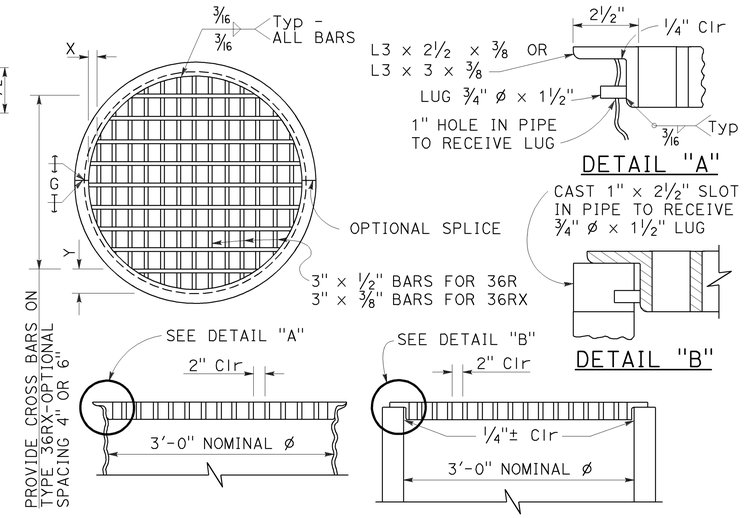

TYPE 36R AND 36RX GRATE DETAILS

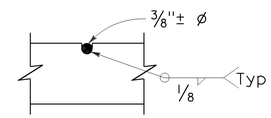

⅜"± ø Cross bars may be fillet welded, resistance welded or electroforged to bearing bars.

CROSS BAR DETAIL TYPE 36RX GRATE (WELDED STEEL)

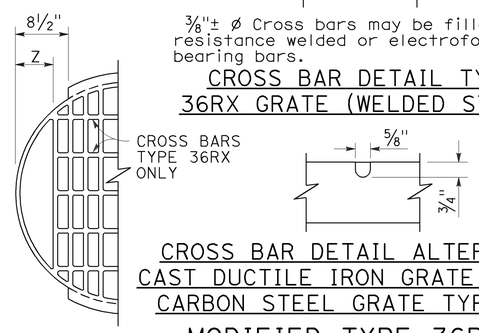

CROSS BAR DETAIL ALTERNATIVE CAST DUCTILE IRON GRATE OR CAST CARBON STEEL GRATE TYPE 36RX

MODIFIED TYPE 36R AND 36RX GRATE FOR ODI INLET

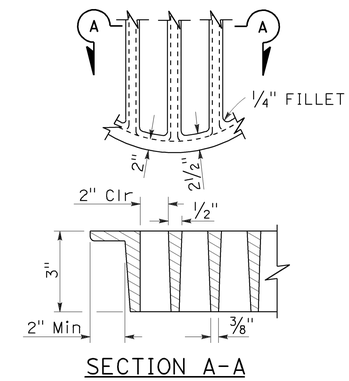

SECTION A-A

ALTERNATIVE CAST DUCTILE IRON GRATE OR CAST CARBON STEEL GRATE TYPE 36R AND 36RX

BASIS FOR Misc IRON AND STEEL FINAL PAY WEIGHTS FOR DRAINAGE INLETS

INLET TYPE	GRATE TYPE	No. OF GRATES	WEIGHT LB
GDO (SEE NOTE 4)	24-10C	2	391
	24-10S	2	456
	24-12X	2	473
	24-13	2	374
GO,GOL,G1,G2, G3,G4 (TYPE 24)	24-10C	1	202
	24-10S	1	229
	24-12X	1	239
	24-13	1	188
G4 (TYPE 18) G5,G6	18-8S	1	187
	18-9X	1	187
	18-10	1	149
GT1,GT2	18-8S	2	374
	18-9X	2	374
	18-10	2	298
GT3,GT4	24-10C	2	404
	24-10S	2	458
	24-12X	2	478
	24-13	2	376
ODI	36RX (Mod)	1	196
GMP,GCP,GCPI	36RX	1	215
ODI	36R (Mod)	1	220
GMP,GCP,GCPI	36R	1	236
TRASH RACK			22
GRATE CHAIN			3

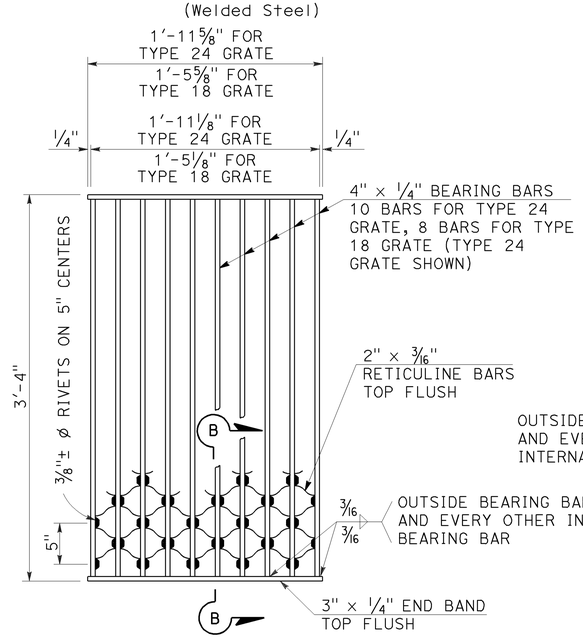

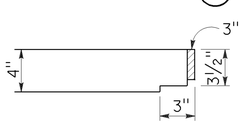

NOTES:

Weight of Type 24 grate = 182 LBS.
Weight of Type 18 grate = 145 LBS.

SECTION B-B

TYPE 18-8S AND 24-10S GRATE

(Welded Steel) Reticuline type

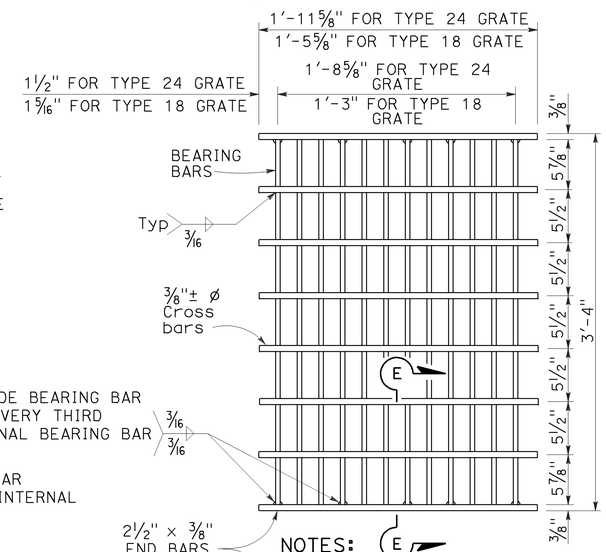

SECTION E-E

NOTES:

Bearing bars to be 3½" × ⅜" bars on 1⅞" centers.

12 Bars for Type 24 grate - 9 bars for Type 18 grates. (Type 24 grate shown).

Weight of Type 24 grate = 192 LBS.

Weight of Type 18 grate = 145 LBS.

⅜"± ø Cross bars may be fillet welded, resistance welded or electroforged to bearing bars.

TYPE 18-9X AND 24-12X GRATE

(Welded Steel)

NOTES:

1. When alternative grates are allowed - Final pay based on alternative with the lesser weight.
2. Use frame shown on Standard Plan D74A, D74B or RSP D77A as appropriate.
3. When Type 24-10S, 24-12X or 24-13 grates are used with GDO Inlets, a ¼" × 3½" × 3'-4⅞" steel bar shall be welded across the center of inlet frame to separate the individual grates.
4. See Revised Standard Plan RSP D77A for connecting chain to welded grate and frame. When chain is required, do not use cast ductile iron grate.

GRATE BAR SPACING TABLE

TYPE	No. OF BARS	CLEAR BAR SPACING	X	Y 4" SPACING	Y 6" SPACING	Z
36R	13	2"	2⅛"	-	-	-
36RX (STEEL)	15	2"	9/16"	3¾"	5¾"	-
36RX (CAST)	13	2"	2⅛"	3¾"	5¾"	-
36R Mod	12	2"	2⅛"	-	-	5"
36RX Mod (STEEL)	13	2"	9/16"	3¾"	5¾"	5 11/16"
36RX Mod (CAST)	12	2"	2⅛"	3¾"	5¾"	5"

STATE OF CALIFORNIA
DEPARTMENT OF TRANSPORTATION

GRATE DETAILS No. 2

NO SCALE

RSP D77B DATED APRIL 19, 2013 SUPERSEDES RSP D77B DATED JULY 20, 2012 AND STANDARD PLAN D77B DATED MAY 20, 2011 - PAGE 165 OF THE STANDARD PLANS BOOK DATED 2010.

REVISED STANDARD PLAN RSP D77B

4-4-13

Dist	COUNTY	ROUTE	POST MILES TOTAL PROJECT	SHEET No.	TOTAL SHEETS
01	Men	128	Var	104	106

REGISTERED CIVIL ENGINEER

April 19, 2013
PLANS APPROVAL DATE

REGISTERED PROFESSIONAL ENGINEER
Gurinderpal Bhullar
No. C48815
Exp. 9-30-14
CIVIL
STATE OF CALIFORNIA

THE STATE OF CALIFORNIA OR ITS OFFICERS OR AGENTS SHALL NOT BE RESPONSIBLE FOR THE ACCURACY OR COMPLETENESS OF SCANNED COPIES OF THIS PLAN SHEET.

TO ACCOMPANY PLANS DATED 6-24-13

2010 REVISED STANDARD PLAN RSP T9

TABLE 1

TAPER LENGTH CRITERIA AND CHANNELIZING DEVICE SPACING

SPEED (S)	MINIMUM TAPER LENGTH * FOR WIDTH OF OFFSET 12 FEET (W)				MAXIMUM CHANNELIZING DEVICE SPACING		
					X	Y	Z **
	TANGENT 2L	MERGING L	SHIFTING L/2	SHOULDER L/3	TAPER	TANGENT	CONFLICT
mph	ft	ft	ft	ft	ft	ft	ft
20	160	80	40	27	20	40	10
25	250	125	63	42	25	50	12
30	360	180	90	60	30	60	15
35	490	245	123	82	35	70	17
40	640	320	160	107	40	80	20
45	1080	540	270	180	45	90	22
50	1200	600	300	200	50	100	25
55	1320	660	330	220	55	110	27
60	1440	720	360	240	60	120	30
65	1560	780	390	260	65	130	32
70	1680	840	420	280	70	140	35

* - For other offsets, use the following merging taper length formula for L:
For speed of 40 mph or less, $L = WS^2/60$
For speed of 45 mph or more, $L = WS$

Where: L = Taper length in feet
W = Width of offset in feet
S = Posted speed limit, off-peak 85th-percentile speed prior to work starting, or the anticipated operating speed in mph

** - Use for taper and tangent sections where there are no pavement markings or where there is a conflict between existing pavement markings and channelizers (CA).

TABLE 2

LONGITUDINAL BUFFER SPACE AND FLAGGER STATION SPACING

SPEED *	Min D **	DOWNGRADE Min D ***		
		-3%	-6%	-9%
mph	ft	ft	ft	ft
20	115	116	120	126
25	155	158	165	173
30	200	205	215	227
35	250	257	271	287
40	305	315	333	354
45	360	378	400	427
50	425	446	474	507
55	495	520	553	593
60	570	598	638	686
65	645	682	728	785
70	730	771	825	891

* - Speed is posted speed limit, off-peak 85th-percentile speed prior to work starting, or the anticipated operating speed in mph

** - Longitudinal buffer space or flagger station spacing

*** - Use on sustained downgrade steeper than -3 percent and longer than 1 mile.

TABLE 3

ADVANCE WARNING SIGN SPACING

ROAD TYPE	DISTANCE BETWEEN SIGNS *		
	A	B	C
	ft	ft	ft
URBAN - 25 mph OR LESS	100	100	100
URBAN - MORE THAN 25 mph TO 40 mph	250	250	250
URBAN - MORE THAN 40 mph	350	350	350
RURAL	500	500	500
EXPRESSWAY / FREEWAY	1000	1500	2640

* - The distances are approximate, are intended for guidance purposes only, and should be applied with engineering judgment. These distances should be adjusted by the Engineer for field conditions, if necessary, by increasing or decreasing the recommmended distances.

STATE OF CALIFORNIA
DEPARTMENT OF TRANSPORTATION

TRAFFIC CONTROL SYSTEM FOR LANE CLOSURE ON FREEWAYS AND EXPRESSWAYS

NO SCALE

RSP T9 DATED APRIL 19, 2013 SUPPLEMENTS THE STANDARD PLANS BOOK DATED 2010.

REVISED STANDARD PLAN RSP T9

1-23-13

Dist	COUNTY	ROUTE	POST MILES TOTAL PROJECT	SHEET No.	TOTAL SHEETS
01	Men	128	Var	105	106

REGISTERED CIVIL ENGINEER

April 19, 2013
PLANS APPROVAL DATE

REGISTERED PROFESSIONAL ENGINEER Gurinderpal Bhullar No. C48815 Exp. 9-30-14 CIVIL STATE OF CALIFORNIA

THE STATE OF CALIFORNIA OR ITS OFFICERS OR AGENTS SHALL NOT BE RESPONSIBLE FOR THE ACCURACY OR COMPLETENESS OF SCANNED COPIES OF THIS PLAN SHEET.

TO ACCOMPANY PLANS DATED 6-24-13

NOTES:

See Revised Standard Plan RSP T9 for tables.

Use cone spacing X for taper segment, Y for tangent segment or Z for conflict situations, as approriate, per Table 1, unless X, Y, or Z cone spacing is shown on this sheet.

Unless otherwise specified in the special provisions, all temporary warning signs shall have black legend on fluorescent orange background.

California codes are designated by (CA). Otherwise, Federal (MUTCD) codes are shown.

TYPICAL LANE CLOSURE WITH REVERSIBLE CONTROL

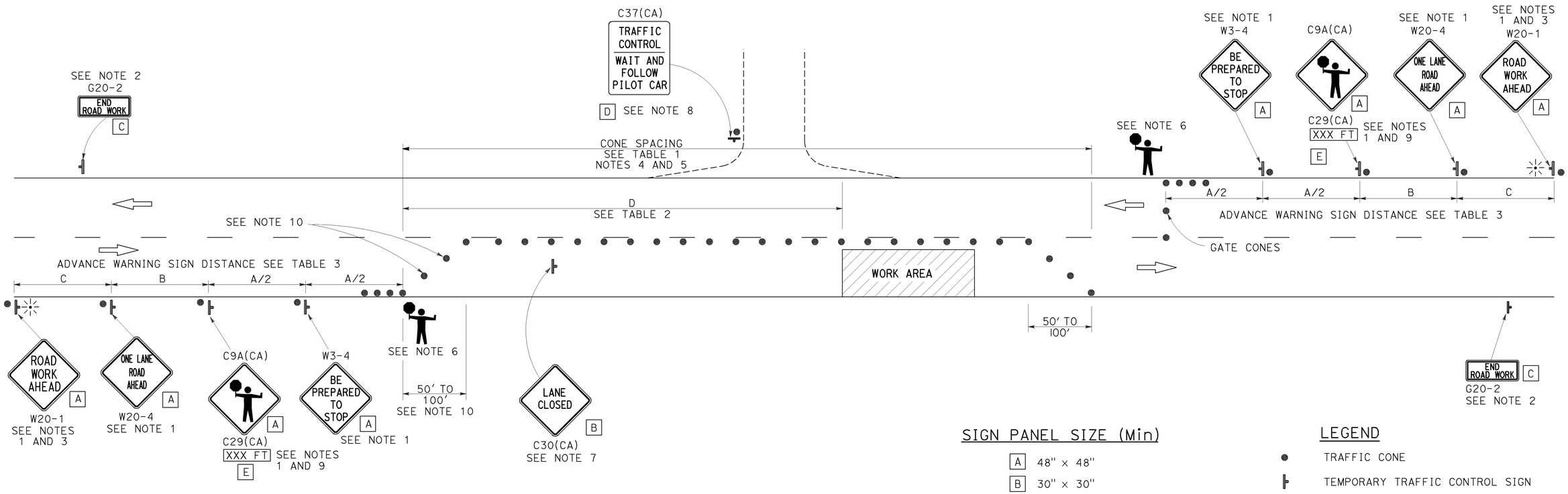

SIGN PANEL SIZE (Min)

A	48" × 48"
B	30" × 30"
C	36" × 18"
D	36" × 42"
E	20" × 7"

LEGEND

- TRAFFIC CONE
- TEMPORARY TRAFFIC CONTROL SIGN
- PORTABLE FLASHING BEACON
- FLAGGER

NOTES:

1. Each advance warning sign in each direction of travel shall be equipped with at least two flags for daytime closure. Each flag shall be at least 16" x 16" in size and shall be orange or fluorescent red-orange in color. Flashing beacons shall be placed at the locations indicated for lane closure during hours of darkness.
2. A G20-2 "END ROAD WORK" sign, as appropriate, shall be placed at the end of the lane control unless the end of work area is obvious, or ends within a larger project's limits.
3. If the W20-1 sign would follow within 2000' of a stationary W20-1 or G20-1 "ROAD WORK NEXT _____ MILES", use a W20-4 sign for the first advance warning sign.
4. All cones used for lane closures during the hours of darkness shall be fitted with retroreflective bands (or sleeves) as specified in the specifications.
5. Portable delineators, placed at one-half the spacing indicated for traffic cones, may be used instead of cones for daytime closures only.
6. Additional advance flaggers may be required. Flagger should stand in a conspicuous place, be visible to approaching traffic as well as approaching vehicles after the first vehicle has stopped. During the hours of darkness, the flagging-station and flagger shall be illuminated and clearly visible to approaching traffic. The illumination footprint of the lighting on the ground shall be at least 20' in diameter. Place a minimum of four cones at 50' intervals in advance of flagger station as shown.
7. Place C30(CA) "LANE CLOSED" sign at 500' to 1000' intervals throughout extended work areas. They are optional if the work area is visible from the flagger station.
8. When a pilot car is used, place a C37(CA) "TRAFFIC CONTROL-WAIT AND FOLLOW PILOT CAR" sign with black legend on white background at all intersections, driveways and alleys without a flagger within traffic control area. Signs shall be clean and visible at all times. Where traffic can not be effectively self-regulated, at least one flagger shall be used at each intersection within traffic control area.
9. An optional C29(CA) sign may be placed below the C9A(CA) sign.
10. Either traffic cones or barricades shall be placed on the taper. Barricades shall be Type I, II, or III.

STATE OF CALIFORNIA
DEPARTMENT OF TRANSPORTATION

TRAFFIC CONTROL SYSTEM FOR LANE CLOSURE ON TWO LANE CONVENTIONAL HIGHWAYS

NO SCALE

RSP T13 DATED APRIL 19, 2013 SUPERSEDES STANDARD PLAN T13 DATED MAY 20, 2011 - PAGE 241 OF THE STANDARD PLANS BOOK DATED 2010.

REVISED STANDARD PLAN RSP T13

2010 REVISED STANDARD PLAN RSP T13

4-2-13

Dist	COUNTY	ROUTE	POST MILES TOTAL PROJECT	SHEET No.	TOTAL SHEETS
01	Men	128	Var	106	106

REGISTERED CIVIL ENGINEER

October 21, 2011
PLANS APPROVAL DATE

REGISTERED PROFESSIONAL ENGINEER Tillat Satter No. C42892 Exp. 3-31-12 CIVIL STATE OF CALIFORNIA

THE STATE OF CALIFORNIA OR ITS OFFICERS OR AGENTS SHALL NOT BE RESPONSIBLE FOR THE ACCURACY OR COMPLETENESS OF SCANNED COPIES OF THIS PLAN SHEET.

TO ACCOMPANY PLANS DATED 6-24-13

2010 REVISED STANDARD PLAN RSP B11-47

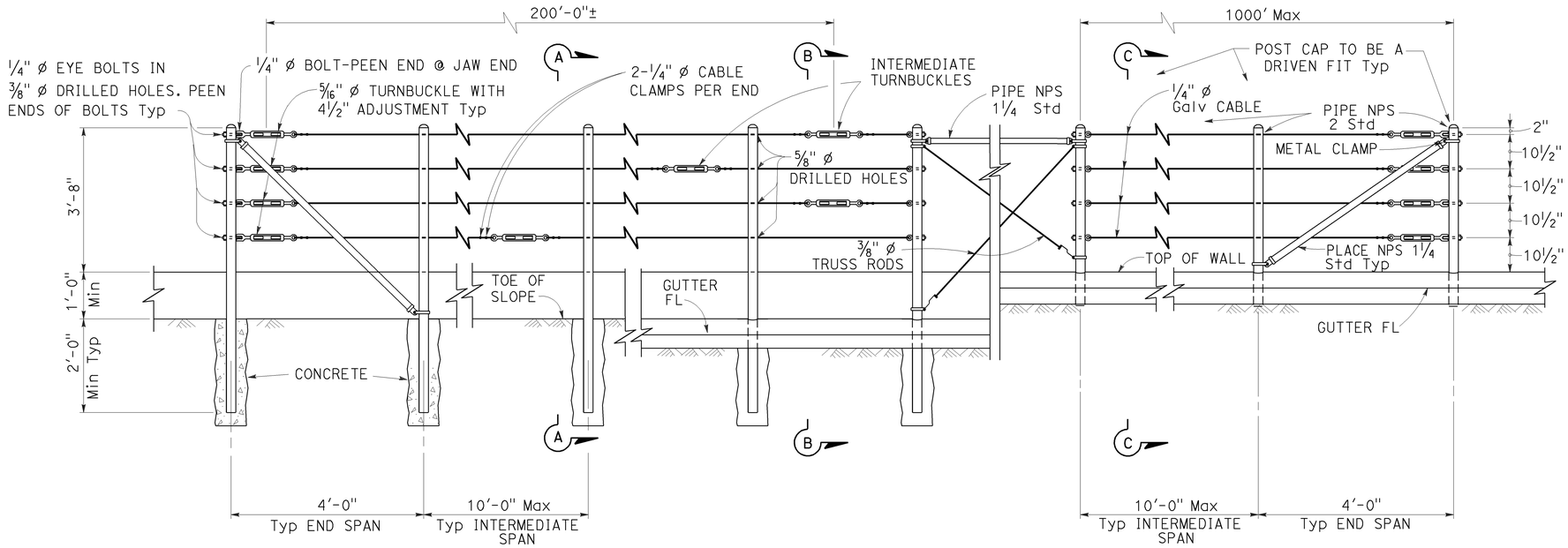

EXISTING WALL (WITHOUT GUTTER)
Existing

RETAINING WALL (WITH GUTTER)
Existing

RETAINING WALL (WITH GUTTER)
New construction

ELEVATION

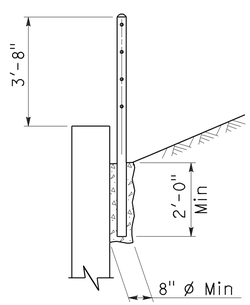

SECTION A-A
Existing

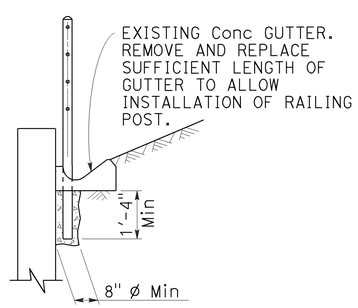

SECTION B-B
Existing

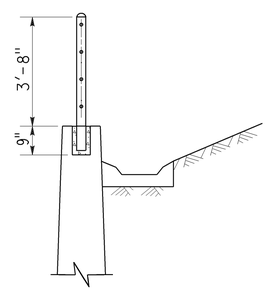

SECTION C-C
New construction

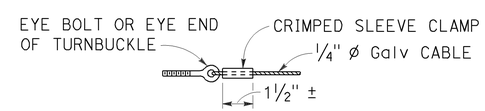

ALTERNATIVE CABLE CONNECTION

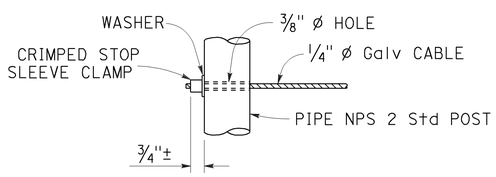

ALTERNATIVE DEAD END ANCHORAGE

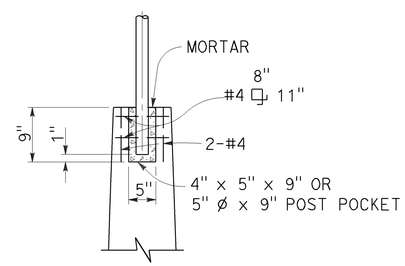

POST POCKET

NOTES:

1. Maximum distance between turnbuckles shall be 200'-0"±.
2. Intermediate turnbuckles to be placed in adjacent spans.
3. Cable shall not be spliced between intermediate turnbuckles and end posts.
4. Posts to be vertical.
5. Alignment of holes in posts may vary to conform to slope of top of retaining wall.
6. The Contractor shall verify all dependent dimensions in the field before ordering or fabricating any material.
7. Line posts shall be braced horizontally and trussed diagonally in both directions at intervals not to exceed 1000'.
8. Post pockets to be centered in top of wall.
9. Typical end spans, braced in both directions, shall be constructed at changes in line where the angle of deflection is 15° or more.
10. Provide thimbles at all cable loops.

STATE OF CALIFORNIA
DEPARTMENT OF TRANSPORTATION

CABLE RAILING

NO SCALE

RSP B11-47 DATED OCTOBER 21, 2011 SUPERSEDES STANDARD PLAN B11-47 DATED MAY 20, 2011 - PAGE 293 OF THE STANDARD PLANS BOOK DATED 2010.

REVISED STANDARD PLAN RSP B11-47