Dist	COUNTY	ROUTE	POST MILES TOTAL PROJECT	SHEET No.	TOTAL SHEETS
01	Men	1	43.7/69.7	1	19

STATE OF CALIFORNIA

DEPARTMENT OF TRANSPORTATION

ACST-P001(611)E

PROJECT PLANS FOR CONSTRUCTION ON

STATE HIGHWAY

IN MENDOCINO COUNTY
AT VARIOUS LOCATIONS
FROM ALBION RIVER BRIDGE
TO TEN MILE RIVER BRIDGE

TO BE SUPPLEMENTED BY STANDARD PLANS DATED 2010

INDEX OF PLANS

SHEET No.	DESCRIPTION
1	TITLE AND LOCATION MAP
2	TYPICAL CROSS SECTIONS
3	LAYOUT
4	CONSTRUCTION DETAILS
5-6	CONSTRUCTION AREA SIGNS
7	TRAFFIC HANDLING PLAN
8	PAVEMENT DELINEATION PLAN
9	PAVEMENT DELINEATION QUANTITIES
10	SUMMARY OF QUANTITIES
11-12	REVISED STANDARD PLANS

STRUCTURE PLANS

13-15	GENERAL PLANS
16-19	DETAIL SHEETS

THE STANDARD PLANS LIST APPLICABLE TO THIS CONTRACT IS INCLUDED IN THE NOTICE TO BIDDERS AND SPECIAL PROVISIONS BOOK.

LOCATIONS OF CONSTRUCTION

No.	COUNTY	ROUTE	POST MILE	BRIDGE #	BRIDGE NAME
1	Men	1	43.7	10-0136	ALBION RIVER BRIDGE
2	Men	1	52.6	10-0151	RUSSIAN GULCH BRIDGE
3	Men	1	69.7	10-0274	TEN MILE RIVER BRIDGE

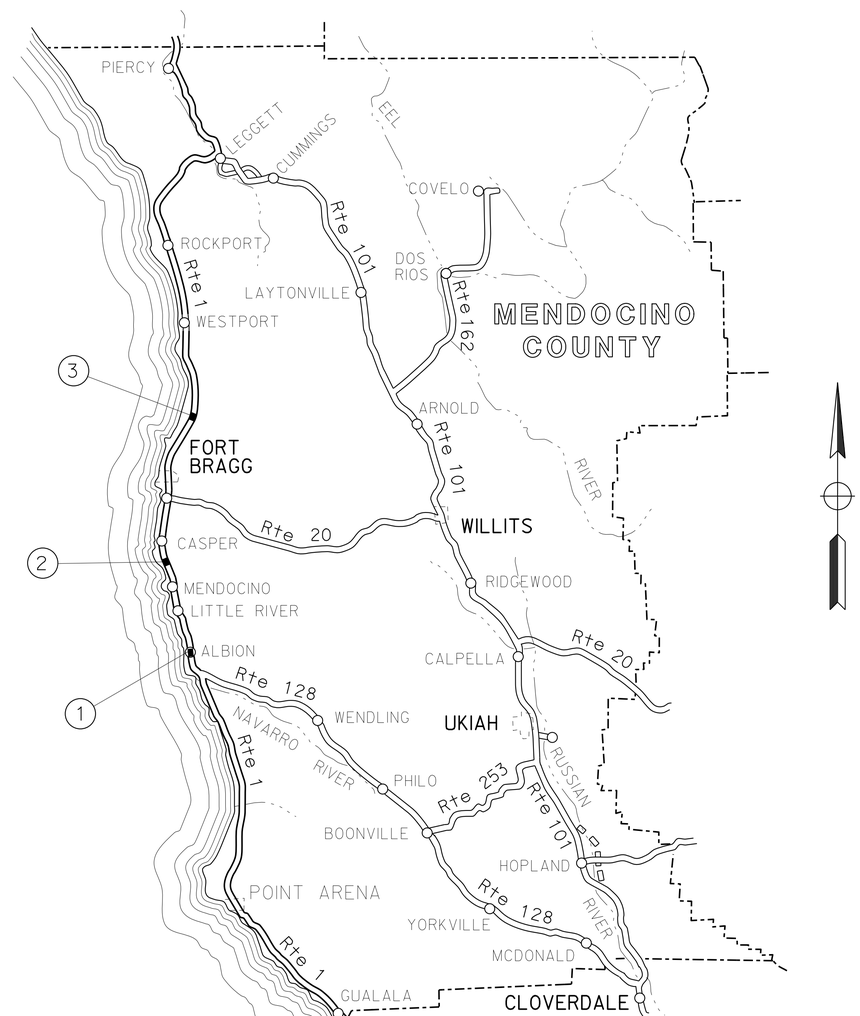

NO SCALE

THE CONTRACTOR SHALL POSSESS THE CLASS (OR CLASSES) OF LICENSE AS SPECIFIED IN THE "NOTICE TO BIDDERS."

PROJECT MANAGER FRANK DEMLING

DESIGN MANAGER L.R. ASHLEY

PROJECT ENGINEER REGISTERED CIVIL ENGINEER — DATE 5/6/2016

May 09, 2016
PLANS APPROVAL DATE

REGISTERED PROFESSIONAL ENGINEER — Thomas Jon Phillips — No. 64633 — Exp. 6/30/17 — CIVIL — STATE OF CALIFORNIA

THE STATE OF CALIFORNIA OR ITS OFFICERS OR AGENTS SHALL NOT BE RESPONSIBLE FOR THE ACCURACY OR COMPLETENESS OF SCANNED COPIES OF THIS PLAN SHEET.

CONTRACT No.	01-0E2004
PROJECT ID	0114000015

LAST REVISION 05-07-16

DATE PLOTTED => 10-JUN-2016
TIME PLOTTED => 09:27

Dist	COUNTY	ROUTE	POST MILES TOTAL PROJECT	SHEET No.	TOTAL SHEETS
01	Men	1	43.7/69.7	2	19

REGISTERED CIVIL ENGINEER DATE 5/6/2016

May 09, 2016
PLANS APPROVAL DATE

REGISTERED PROFESSIONAL ENGINEER Thomas Jon Phillips No. 64633 Exp. 6/30/17 CIVIL STATE OF CALIFORNIA

THE STATE OF CALIFORNIA OR ITS OFFICERS OR AGENTS SHALL NOT BE RESPONSIBLE FOR THE ACCURACY OR COMPLETENESS OF SCANNED COPIES OF THIS PLAN SHEET.

PAVEMENT CLIMATE REGION

NORTH COAST

NOTE:

DIMENSIONS OF THE PAVEMENT STRUCTURES (STRUCTURAL SECTIONS) ARE SUBJECT TO TOLERANCES SPECIFIED IN THE STANDARD SPECIFICATIONS.

LEGEND:

BWC-G = BONDED WEARING COURSE-GAP GRADED

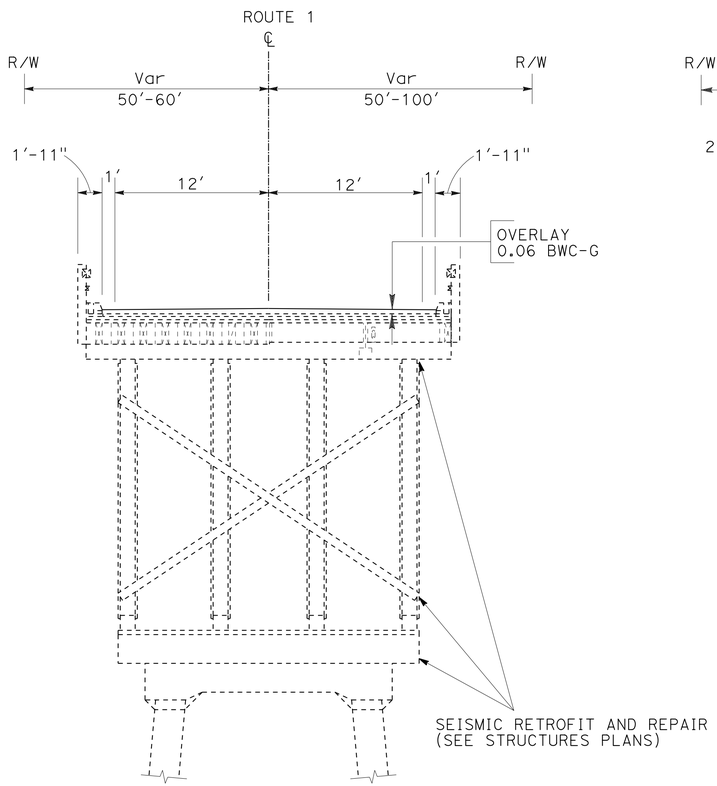

STA "D2" 162+61 TO STA "D2" 172+30

LOCATION 1 (PM 43.7)
ALBION RIVER BRIDGE (#10-0136)

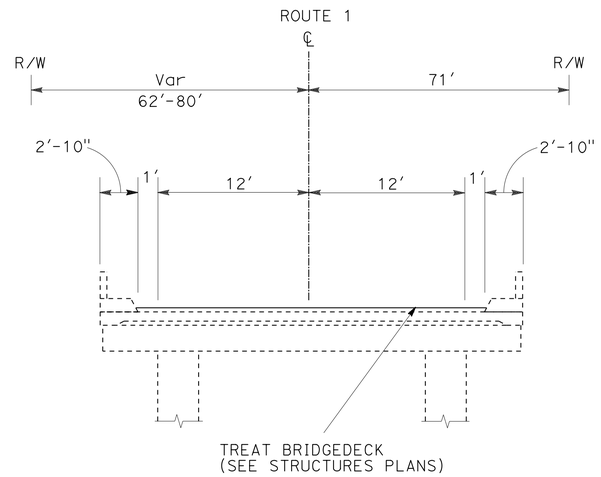

LOCATION 2 (PM 52.6)
RUSSIAN GULCH BRIDGE (#10-0151)

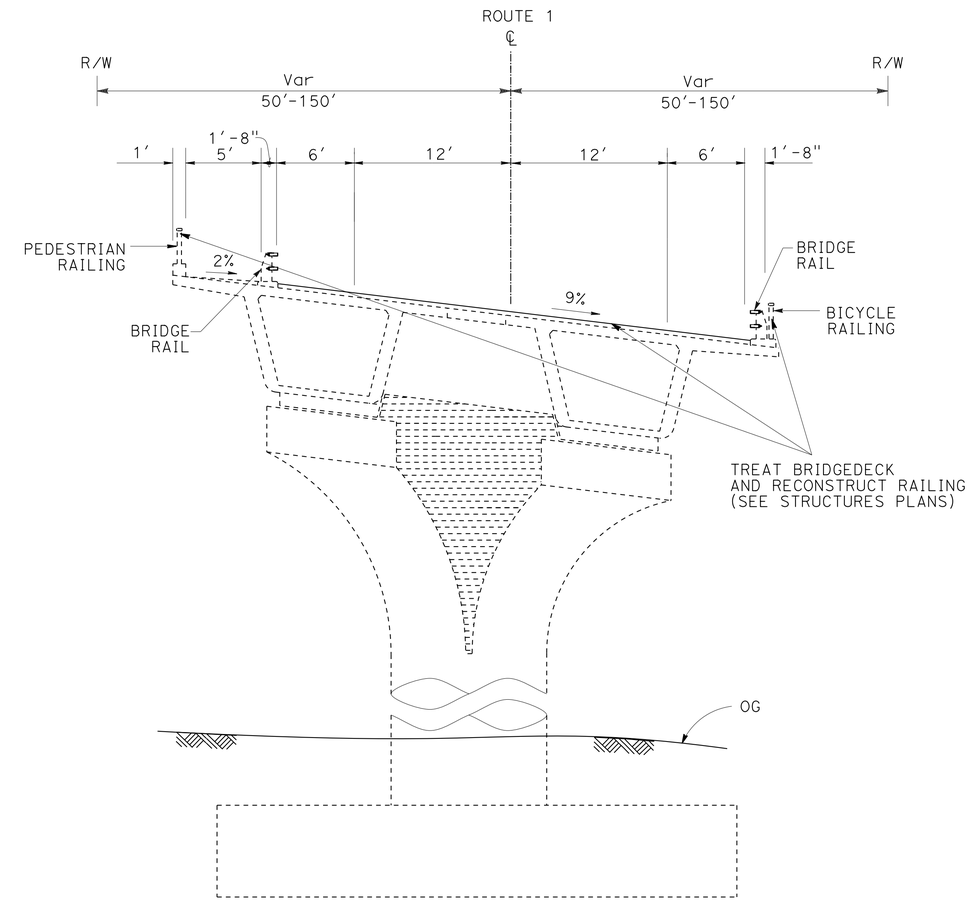

LOCATION 3 (PM 69.7)
TEN MILE RIVER BRIDGE (#10-0274)

TYPICAL CROSS SECTIONS
X-1

NO SCALE

STATE OF CALIFORNIA - DEPARTMENT OF TRANSPORTATION
Caltrans® DESIGN

FUNCTIONAL SUPERVISOR: L.R. ASHLEY
CALCULATED-DESIGNED BY: BIJAN SAMRAD
CHECKED BY: TODD LARK
REVISED BY
DATE REVISED

P:\PROJ\01\0E200\drafting\01-0e200\10e200ca001.dgn

LAST REVISION 05-07-16 | DATE PLOTTED => 10-JUN-2016 | TIME PLOTTED => 09:28

BORDER LAST REVISED 7/2/2010 | USERNAME => s132662 | DGN FILE => 10e200ca001.dgn | RELATIVE BORDER SCALE IS IN INCHES 0 1 2 3 | UNIT 0313 | PROJECT NUMBER & PHASE 01140000151

Dist	COUNTY	ROUTE	POST MILES TOTAL PROJECT	SHEET No.	TOTAL SHEETS
01	Men	1	43.7/69.7	3	19

REGISTERED CIVIL ENGINEER 5/6/2016 DATE

May 09, 2016
PLANS APPROVAL DATE

REGISTERED PROFESSIONAL ENGINEER
Thomas Jon Phillips
No. 64633
Exp. 6/30/17
CIVIL
STATE OF CALIFORNIA

THE STATE OF CALIFORNIA OR ITS OFFICERS OR AGENTS SHALL NOT BE RESPONSIBLE FOR THE ACCURACY OR COMPLETENESS OF SCANNED COPIES OF THIS PLAN SHEET.

NOTE:
FOR ACCURATE RIGHT OF WAY DATA, CONTACT RIGHT OF WAY ENGINEERING AT THE DISTRICT OFFICE.

LEGEND:
TGBB — TEMPORARY GRAVEL BAG BERM

ABBREVIATIONS:
MHHW — MEAN HIGHER HIGH WATER

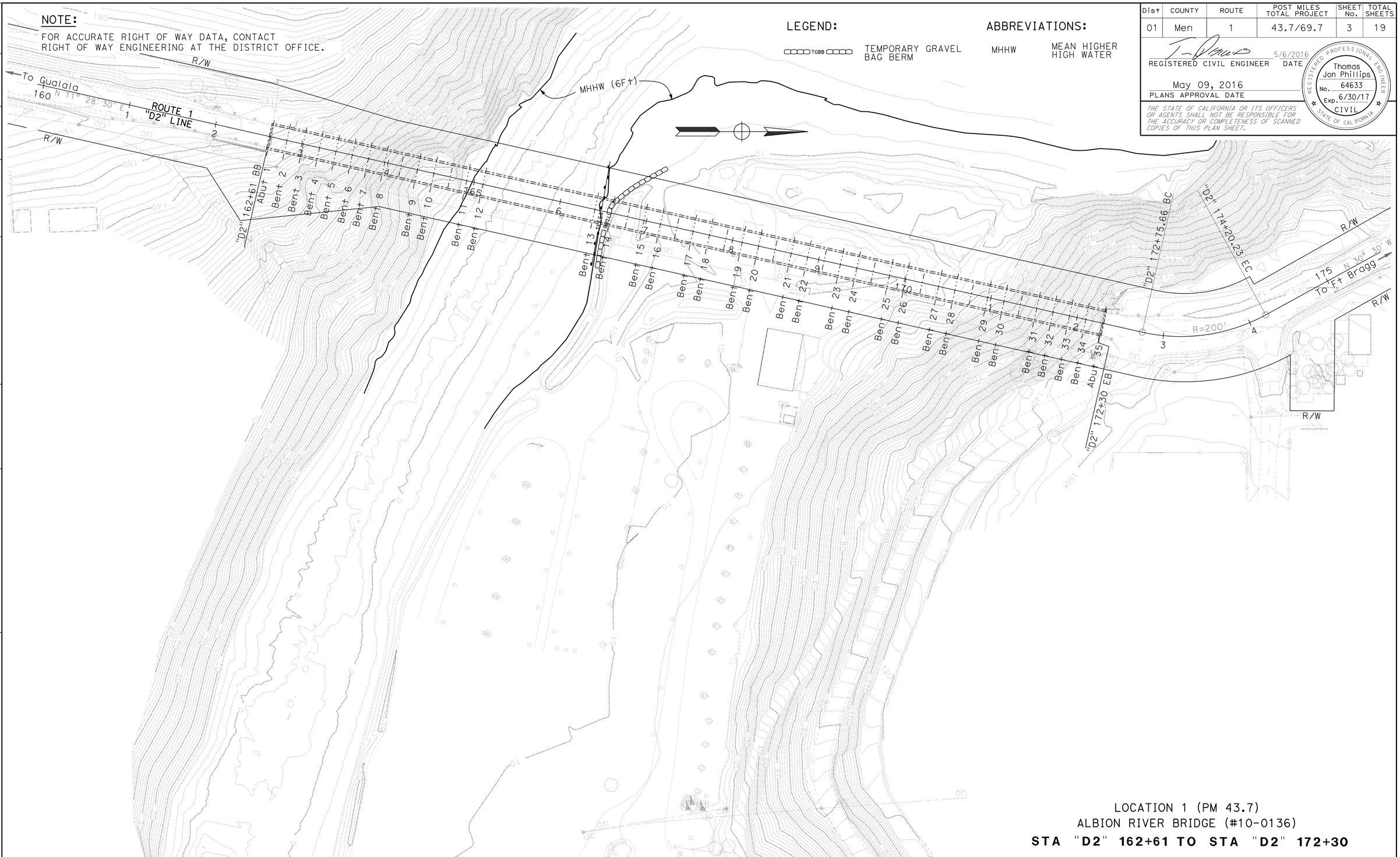

LOCATION 1 (PM 43.7)
ALBION RIVER BRIDGE (#10-0136)
STA "D2" 162+61 TO STA "D2" 172+30

SCALE: 1"=50'

LAYOUT L-1

LAST REVISION 05-07-16 | DATE PLOTTED => 15-JUN-2016 | TIME PLOTTED => 12:32

REVISED BY | DATE REVISED
BIJAN SAMRAD | TODD LARK
CALCULATED-DESIGNED BY | CHECKED BY
FUNCTIONAL SUPERVISOR: L.R. ASHLEY

STATE OF CALIFORNIA - DEPARTMENT OF TRANSPORTATION
Caltrans
DESIGN

P:\PROJ\01\0E200\drafting\01-0e200\10e200ea001.dgn

Dist	COUNTY	ROUTE	POST MILES TOTAL PROJECT	SHEET No.	TOTAL SHEETS
01	Men	1	43.7/69.7	4	19

REGISTERED CIVIL ENGINEER 5/6/2016 DATE

May 09, 2016
PLANS APPROVAL DATE

REGISTERED PROFESSIONAL ENGINEER Thomas Jon Phillips No. 64633 Exp. 6/30/17 CIVIL STATE OF CALIFORNIA

THE STATE OF CALIFORNIA OR ITS OFFICERS OR AGENTS SHALL NOT BE RESPONSIBLE FOR THE ACCURACY OR COMPLETENESS OF SCANNED COPIES OF THIS PLAN SHEET.

NOTE:

1. AREAS AND DIMENSIONS OF REPLACE AC SURFACING WILL BE DETERMINED BY THE ENGINEER.

ABBREVIATIONS:

BWC-G BONDED WEARING COURSE-GAP GRADED

LEGEND:

- EXISTING STRUCTURE
- LIMITS OF COLD PLANE AC PAVEMENT
- LIMITS OF OVERLAY (0.06' BWC-G)
- REPLACE AC SURFACING

REPLACE AC SURFACING
STA "D2" 162+61 to STA "D2" 172+30
(NO SCALE)

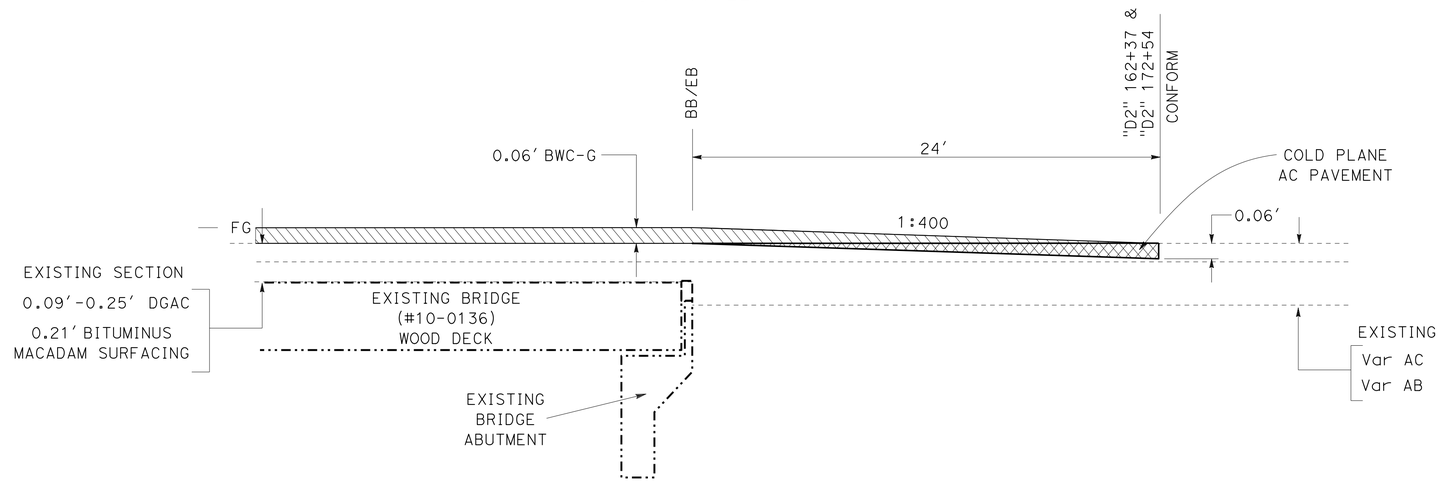

COLD PLANE AC PAVEMENT
BRIDGE PAVING CONFORM AT BB & EB
(NO SCALE)

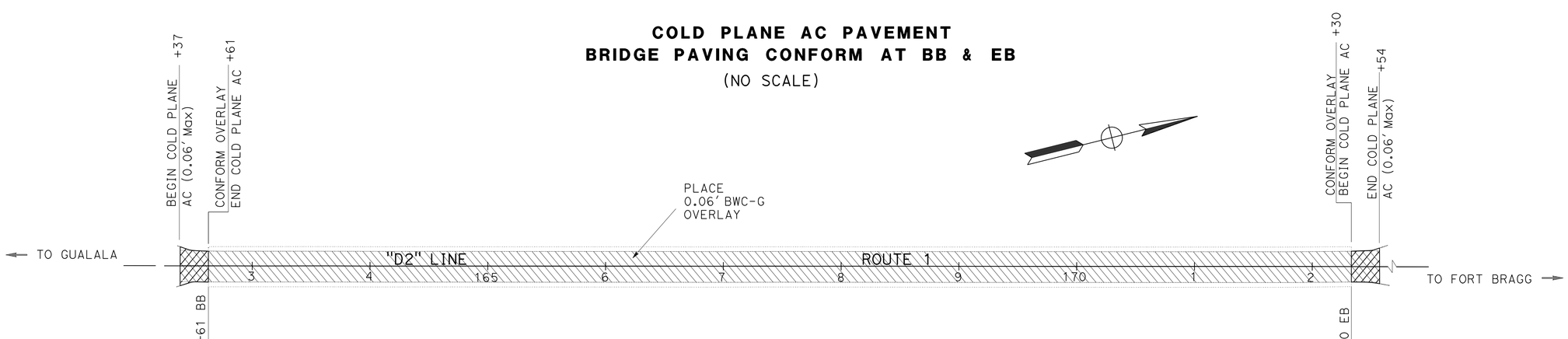

LOCATION 1
ALBION RIVER BRIDGE (#10-0136)
ROUTE 1, PM 43.7

CONSTRUCTION DETAILS
C-1

SCALE: 1"=50'

STATE OF CALIFORNIA - DEPARTMENT OF TRANSPORTATION
DESIGN

FUNCTIONAL SUPERVISOR: L.R. ASHLEY
CALCULATED-DESIGNED BY: BIJAN SAMRAD
CHECKED BY: TODD LARK
REVISED BY
DATE REVISED

P:\PROJ\01\0E200\drafting\01-0e200\10e200ga001.dgn

LAST REVISION 05-07-16
DATE PLOTTED => 10-JUN-2016
TIME PLOTTED => 09:28

Dist	COUNTY	ROUTE	POST MILES TOTAL PROJECT	SHEET No.	TOTAL SHEETS
01	Men	1	43.7/69.7	5	19

REGISTERED CIVIL ENGINEER 5/6/2016 DATE

May 09, 2016
PLANS APPROVAL DATE

REGISTERED PROFESSIONAL ENGINEER Thomas Jon Phillips No. 64633 Exp. 6/30/17 CIVIL STATE OF CALIFORNIA

THE STATE OF CALIFORNIA OR ITS OFFICERS OR AGENTS SHALL NOT BE RESPONSIBLE FOR THE ACCURACY OR COMPLETENESS OF SCANNED COPIES OF THIS PLAN SHEET.

NOTES:
1. EXACT SIGN LOCATION TO BE DETERMINED BY THE ENGINEER.
2. EXISTING UTILITY FACILITIES ARE NOT INCLUDED ON THESE PLANS.

STATIONARY MOUNTED CONSTRUCTION AREA SIGNS

SIGN No.	SIGN CODE		PANEL SIZE	SIGN MESSAGE	NUMBER OF POSTS AND SIZE	NUMBER OF SIGNS
	FEDERAL	CALIFORNIA				
A		C40(CA)	108" x 42"	TRAFFIC FINES DOUBLED IN CONSTRUCTION ZONES	2 - 6" x 6"	6
B	W20-1		36" x 36"	ROAD WORK AHEAD	1 - 4" x 6"	7
C	W11-1		36" x 36"	BICYCLE SYMBOL	1 - 4" x 6"	6
	W16-1		24" x 30"	SHARE THE ROAD		
D	G20-2		36" x 18"	END ROAD WORK	1 - 4" x 4"	6

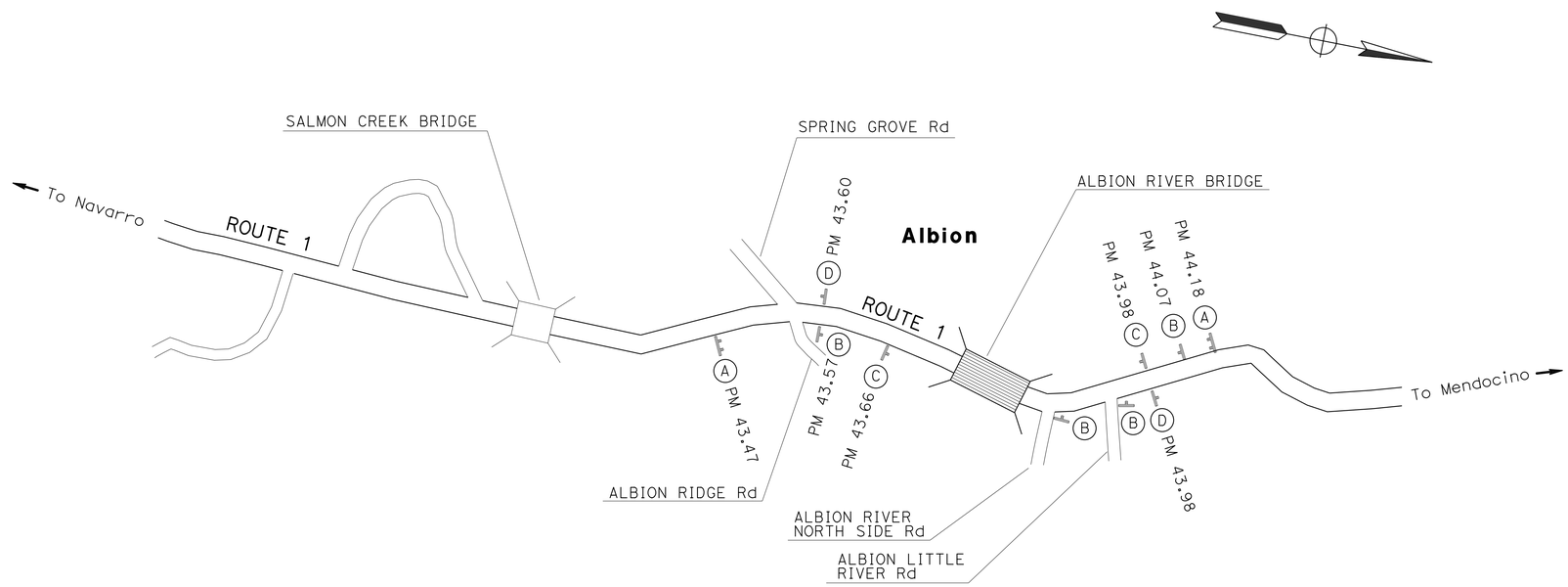

LOCATION 1

APPROVED FOR CONSTRUCTION AREA SIGN WORK ONLY

NO SCALE

CONSTRUCTION AREA SIGNS
CS-1

STATE OF CALIFORNIA - DEPARTMENT OF TRANSPORTATION
Caltrans
DESIGN

FUNCTIONAL SUPERVISOR: L.R. ASHLEY
CALCULATED-DESIGNED BY: BIJAN SAMRAD
CHECKED BY: TODD LARK
REVISED BY
DATE REVISED

P:\PROJ\01\0E200\drafting\01-0e200\10e2001a001.dgn

LAST REVISION 05-07-16
DATE PLOTTED => 10-JUN-2016
TIME PLOTTED => 09:28

BORDER LAST REVISED 7/2/2010
USERNAME => s132662
DGN FILE => 10e2001a001.dgn
RELATIVE BORDER SCALE IS IN INCHES 0 1 2 3
UNIT 0313
PROJECT NUMBER & PHASE 01140000151

Dist	COUNTY	ROUTE	POST MILES TOTAL PROJECT	SHEET No.	TOTAL SHEETS
01	Men	1	43.7/69.7	6	19

REGISTERED CIVIL ENGINEER 5/6/2016 DATE

May 09, 2016
PLANS APPROVAL DATE

REGISTERED PROFESSIONAL ENGINEER
Thomas Jon Phillips
No. 64633
Exp. 6/30/17
CIVIL
STATE OF CALIFORNIA

THE STATE OF CALIFORNIA OR ITS OFFICERS OR AGENTS SHALL NOT BE RESPONSIBLE FOR THE ACCURACY OR COMPLETENESS OF SCANNED COPIES OF THIS PLAN SHEET.

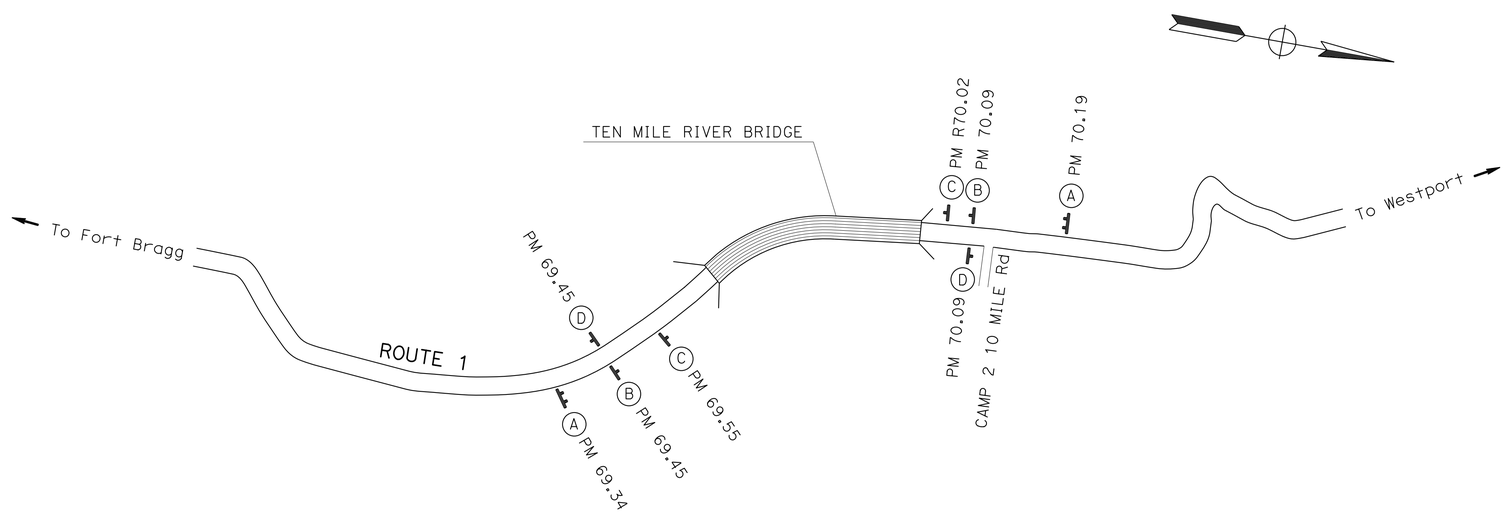

LOCATION 3

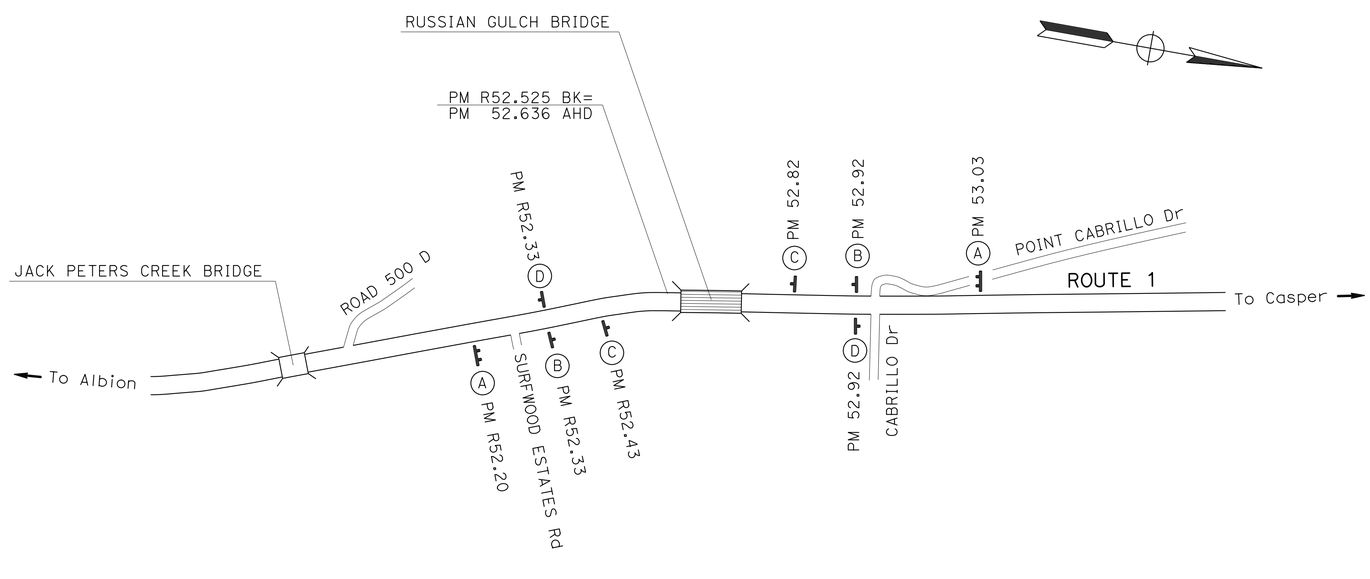

LOCATION 2

APPROVED FOR CONSTRUCTION AREA SIGN WORK ONLY

NO SCALE

CONSTRUCTION AREA SIGNS
CS-2

REVISED BY | DATE REVISED
BIJAN SAMRAD | TODD LARK
CALCULATED-DESIGNED BY | CHECKED BY
FUNCTIONAL SUPERVISOR
L.R. ASHLEY

STATE OF CALIFORNIA - DEPARTMENT OF TRANSPORTATION
Caltrans
DESIGN

P:\PROJ\01\0E200\drafting\01-0e200\10e2001a002.dgn

LAST REVISION 05-07-16 | DATE PLOTTED => 10-JUN-2016 | TIME PLOTTED => 09:28

Dist	COUNTY	ROUTE	POST MILES TOTAL PROJECT	SHEET No.	TOTAL SHEETS
01	Men	1	43.7/69.7	7	19

REGISTERED CIVIL ENGINEER — DATE 5-18-16

May 09, 2016
PLANS APPROVAL DATE

REGISTERED PROFESSIONAL ENGINEER SCOTT LEZCHUK No. C79030 Exp. 3-31-18 CIVIL STATE OF CALIFORNIA

THE STATE OF CALIFORNIA OR ITS OFFICERS OR AGENTS SHALL NOT BE RESPONSIBLE FOR THE ACCURACY OR COMPLETENESS OF SCANNED COPIES OF THIS PLAN SHEET.

NOTES:

This sheet replaces 2010 Standard Plan T13 for District 1 Projects.

See Revised Standard Plan T9 for tables.

Use cone spacing X for taper segment, Y for tangent segment or Z for conflict situations, as appropriate, per Table 1, unless X, Y, or Z cone spacing is shown on this sheet.

All temporary warning signs shall have black legend on fluorescent orange background.

California codes are designated by (CA). Otherwise, Federal (MUTCD) codes are shown.

TYPICAL LANE CLOSURE WITH REVERSIBLE CONTROL

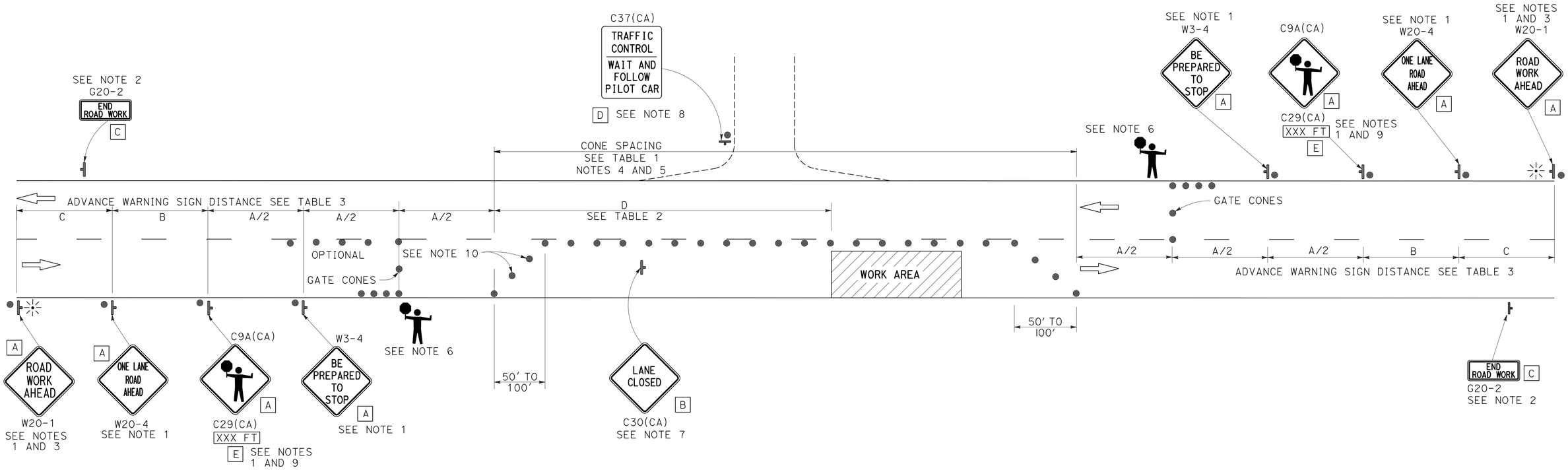

NOTES:

1. Each advance warning sign in each direction of travel shall be equipped with at least two flags for daytime closure. Each flag shall be at least 16" x 16" in size and shall be orange or fluorescent red-orange in color. Flashing beacons shall be placed at the locations indicated for lane closure during hours of darkness.
2. A G20-2 "END ROAD WORK" sign, as appropriate, shall be placed at the end of the lane control unless the end of work area is obvious, or ends within a larger project's limits.
3. If the W20-1 sign would follow within 2000' of a stationary W20-1 or G20-1 "ROAD WORK NEXT _____ MILES", use a W20-4 sign for the first advance warning sign.
4. All cones used for lane closures during the hours of darkness shall be fitted with retroreflective bands (or sleeves) as specified in the specifications.
5. Portable delineators, placed at one-half the spacing indicated for traffic cones, may be used instead of cones for daytime closures only.
6. Additional advance flaggers may be required. Flagger should stand in a conspicuous place, be visible to approaching traffic as well as approaching vehicles after the first vehicle has stopped. During the hours of darkness, the flagging-station and flagger shall be illuminated and clearly visible to approaching traffic. The illumination footprint of the lighting on the ground shall be at least 20' in diameter. Place a minimum of four cones at 50' intervals in advance of flagger station as shown.
7. Place C30(CA) "LANE CLOSED" sign at 500' to 1000' intervals throughout extended work areas. They are optional if the work area is visible from the flagger station.
8. When a pilot car is used, place a C37(CA) "TRAFFIC CONTROL-WAIT AND FOLLOW PILOT CAR" sign with black legend on white background at all intersections, driveways and alleys without a flagger within traffic control area. Signs shall be clean and visible at all times. Where traffic can not be effectively self-regulated, at least one flagger shall be used at each intersection within traffic control area.
9. An optional C29(CA) sign may be placed below the C9A(CA) sign.
10. Either traffic cones or barricades shall be placed on the taper. Barricades shall be Type I, II, or III.

SIGN PANEL SIZE (Min)

A	48" x 48"
B	30" x 30"
C	36" x 18"
D	36" x 42"
E	20" x 7"

LEGEND

- TRAFFIC CONE
- TEMPORARY TRAFFIC CONTROL SIGN
- PORTABLE FLASHING BEACON
- FLAGGER

APPROVED FOR TRAFFIC HANDLING WORK ONLY

STATE OF CALIFORNIA
DEPARTMENT OF TRANSPORTATION

TRAFFIC CONTROL SYSTEM FOR LANE CLOSURE ON TWO LANE CONVENTIONAL HIGHWAYS

NO SCALE

TH-1

REVISED BY | DATE REVISED
SCOTT LEZCHUK | PAUL HAILEY
CALCULATED-DESIGNED BY | CHECKED BY
FUNCTIONAL SUPERVISOR: KEVIN CHURCH

STATE OF CALIFORNIA - DEPARTMENT OF TRANSPORTATION
Caltrans® TRAFFIC OPERATIONS

P:\PROJ\01\0E200\drafting\01-0e200\10e200md001.dgn

LAST REVISION 05-07-16 | DATE PLOTTED => 10-JUN-2016 | TIME PLOTTED => 09:28

Dist	COUNTY	ROUTE	POST MILES TOTAL PROJECT	SHEET No.	TOTAL SHEETS
01	Men	1	43.7/69.7	8	19

REGISTERED CIVIL ENGINEER 5/6/2016 DATE

May 09, 2016
PLANS APPROVAL DATE

REGISTERED PROFESSIONAL ENGINEER
Thomas Jon Phillips
No. 64633
Exp. 6/30/17
CIVIL
STATE OF CALIFORNIA

THE STATE OF CALIFORNIA OR ITS OFFICERS OR AGENTS SHALL NOT BE RESPONSIBLE FOR THE ACCURACY OR COMPLETENESS OF SCANNED COPIES OF THIS PLAN SHEET.

NOTE:

EXISTING UTILITY FACILITIES HAVE NOT BEEN PLOTTED ON THESE PLANS.

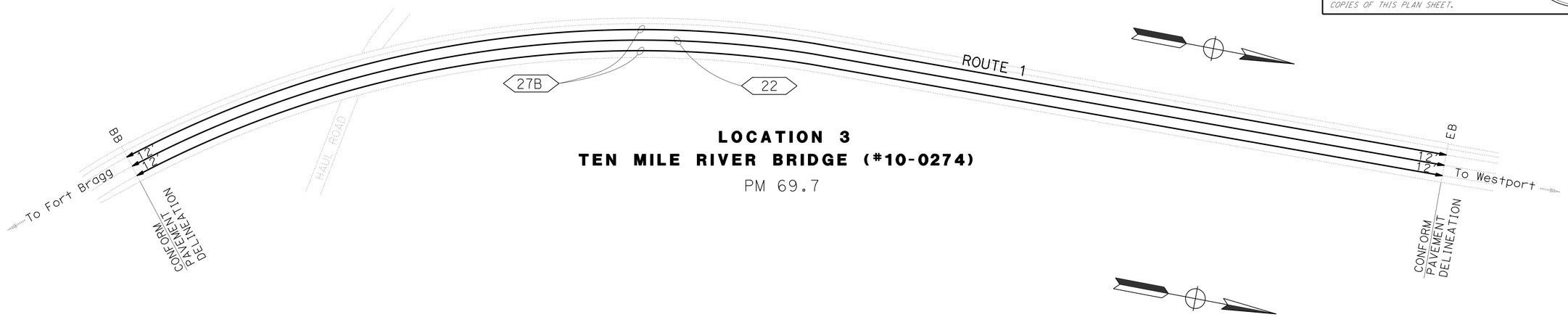

LOCATION 3
TEN MILE RIVER BRIDGE (#10-0274)
PM 69.7

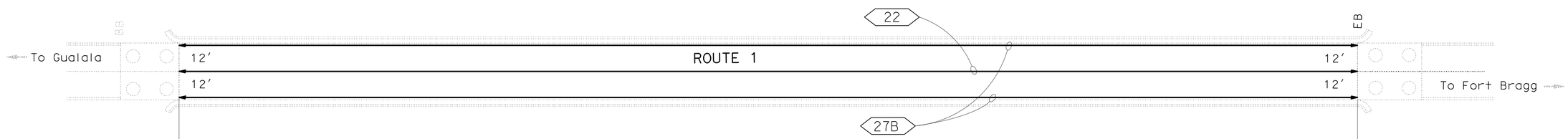

LOCATION 2
RUSSIAN GULCH BRIDGE (#10-0151)
PM 52.6

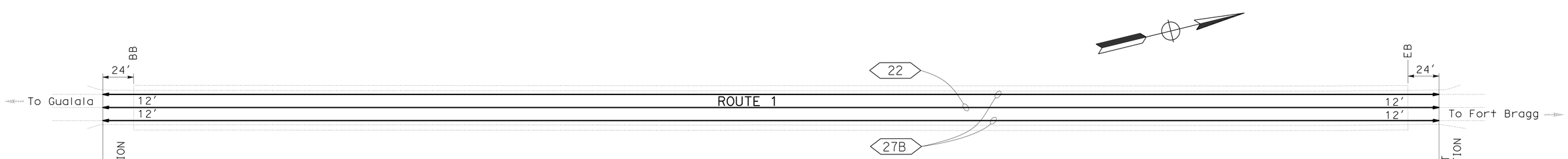

LOCATION 1
ALBION RIVER BRIDGE (#10-0136)
PM 43.7

APPROVED FOR PAVEMENT DELINEATION WORK ONLY

PAVEMENT DELINEATION PLAN
NO SCALE
PD-1

REVISED BY	DATE REVISED
BIJAN SAMRAD	TODD LARK

CALCULATED-DESIGNED BY
CHECKED BY

FUNCTIONAL SUPERVISOR: L.R. ASHLEY

STATE OF CALIFORNIA - DEPARTMENT OF TRANSPORTATION
Caltrans
DESIGN

P:\PROJ\01\0E200\drafting\01-0e200\10e200na001.dgn

LAST REVISION 05-07-16
DATE PLOTTED => 10-JUN-2016
TIME PLOTTED => 09:28

Dist	COUNTY	ROUTE	POST MILES TOTAL PROJECT	SHEET No.	TOTAL SHEETS
01	Men	1	43.7/69.7	9	19

REGISTERED CIVIL ENGINEER 5/6/2016 DATE

May 09, 2016
PLANS APPROVAL DATE

REGISTERED PROFESSIONAL ENGINEER Thomas Jon Phillips No. 64633 Exp. 6/30/17 CIVIL STATE OF CALIFORNIA

THE STATE OF CALIFORNIA OR ITS OFFICERS OR AGENTS SHALL NOT BE RESPONSIBLE FOR THE ACCURACY OR COMPLETENESS OF SCANNED COPIES OF THIS PLAN SHEET.

REMOVE TRAFFIC STRIPE AND PAVEMENT MARKER QUANTITIES

LOCATION	LOCATION (PM)		DETAIL		REMOVE YELLOW THERMOPLASTIC TRAFFIC STRIPE (HAZARDOUS WASTE)	REMOVE THERMOPLASTIC TRAFFIC STRIPE		REMOVE PAVEMENT MARKER	REMARKS
			(N) LENGTH	NUMBER		YELLOW	WHITE		
	FROM	TO	LF		LF	LF	LF	EA	
1	43.73	43.92	969	22	1938			81	ALBION RIVER BRIDGE
				27B			1938		
2	52.69	52.74	527	22		1054		44	RUSSIAN GULCH BRIDGE
				27B			1054		
3	69.69	69.97	1480	22		2960		123	TEN MILE RIVER BRIDGE
				27B			2960		
				SUBTOTAL	1938	4014	5952	248	
				TOTAL	1938	9966		248	

(N) NOT A SEPARATE PAY ITEM, FOR INFORMATION ONLY

PAVEMENT DELINEATION QUANTITIES

LOCATION	LOCATION (PM)		4" THERMOPLASTIC TRAFFIC STRIPE				PAVEMENT MARKER (RETROREFLECTIVE)	REMARKS
			DETAIL		SOLID YELLOW (22)	SOLID WHITE (27B)		
			(N) LENGTH	NUMBER			TYPE D	
	FROM	TO	LF		LF	LF	EA	
1	43.73	43.92	969	22/27B	1938	1938	81	ALBION RIVER BRIDGE
2	52.69	52.74	527	22/27B	1054	1054	44	RUSSIAN GULCH BRIDGE
3	69.69	69.97	1480	22/27B	2960	2960	123	TEN MILE RIVER BRIDGE
				SUB TOTAL	5952	5952	248	
				TOTAL	11904		248	

(N) NOT A SEPARATE PAY ITEM, FOR INFORMATION ONLY

PAVEMENT DELINEATION QUANTITIES
PDQ-1

REVISED BY | DATE REVISED
BIJAN SAMRAD | TODD LARK
CALCULATED-DESIGNED BY | CHECKED BY
FUNCTIONAL SUPERVISOR: L.R. ASHLEY

STATE OF CALIFORNIA - DEPARTMENT OF TRANSPORTATION
Caltrans
DESIGN

P:\PROJ\01\0E200\drafting\01-0e200\10e200nc001.dgn

LAST REVISION 05-07-16 | DATE PLOTTED => 15-JUN-2016 | TIME PLOTTED => 08:16

Dist	COUNTY	ROUTE	POST MILES TOTAL PROJECT	SHEET No.	TOTAL SHEETS
01	Men	1	43.7/69.7	10	19

REGISTERED CIVIL ENGINEER 5/6/2016 DATE

May 09, 2016
PLANS APPROVAL DATE

REGISTERED PROFESSIONAL ENGINEER Thomas Jon Phillips No. 64633 Exp. 6/30/17 CIVIL STATE OF CALIFORNIA

THE STATE OF CALIFORNIA OR ITS OFFICERS OR AGENTS SHALL NOT BE RESPONSIBLE FOR THE ACCURACY OR COMPLETENESS OF SCANNED COPIES OF THIS PLAN SHEET.

PAVEMENT STRUCTURE QUANTITIES

LOCATION	STATION		(N) WIDTH	(N) LENGTH	BONDED WEARING COURSE (GAP GRADED)	ASPHALTIC EMULSION (BONDED WEARING COURSE)	COLD PLANE ASPHALT CONCRETE PAVEMENT	TACK COAT	REPLACE ASPHALT CONCRETE SURFACING	REMARKS
	FROM	TO	LF	LF	TON	TON	SQYD	TON	CY	
1	162+37	162+61	26	24			69.3			ALBION RIVER BRIDGE
	172+30	172+54	26	24			69.3			
	162+37	172+54	26	1017	114	1.88				
	162+61	172+30	VAR	VAR				0.2	35	
TOTALS					114	1.88	138.6	0.2	35	

(N) - NOT A SEPARATE PAY ITEM, FOR INFORMATION ONLY

TEMPORARY WATER POLLUTION CONTROL PROGRAM

LOC	STATION	TEMPORARY GRAVEL BAG BERM	TEMPORARY FENCE (TYPE ESA)	REMARKS
		LF	LF	
1	166+50	100	100	UNDER BRIDGE
	TOTAL	100	100	

SUMMARY OF QUANTITIES
Q-1

CALCULATED-DESIGNED BY BIJAN SAMRAD
CHECKED BY TODD LARK
REVISED BY
DATE REVISED
FUNCTIONAL SUPERVISOR L.R. ASHLEY

STATE OF CALIFORNIA - DEPARTMENT OF TRANSPORTATION
Caltrans
DESIGN

P:\PROJ\01\0E200\drafting\01-0e200\10e200pa001.dgn

LAST REVISION 05-07-16
DATE PLOTTED => 10-JUN-2016
TIME PLOTTED => 09:28

M

Maint	MAINTENANCE
Max	MAXIMUM
MB	METAL BEAM
MBB	METAL BEAM BARRIER
MBGR	METAL BEAM GUARD RAILING
Med	MEDIAN
MGS	MIDWEST GUARDRAIL SYSTEM
MH	MANHOLE
Min	MINIMUM
Misc	MISCELLANEOUS
Misc I & S	MISCELLANEOUS IRON AND STEEL
Mkr	MARKER
Mod	MODIFIED,
	MODIFY
Mon	MONUMENT
MP	METAL PLATE
MPGR	METAL PLATE GUARD RAILING
MR	MOVEMENT RATING
MSE	MECHANICALLY STABILIZED EMBANKMENT
Mt	MOUNTAIN, MOUNT
Mtl	MATERIAL
MVP	MAINTENANCE VEHICLE PULLOUT

N

N	NORTH
NB	NORTHBOUND
No.	NUMBER (MUST HAVE PERIOD)
Nos.	NUMBERS (MUST HAVE PERIOD)
NPS	NOMINAL PIPE SIZE
NS	NEAR SIDE
NSP	NEW STANDARD PLAN
NTS	NOT TO SCALE

O

Oblr	OBLITERATE
OC	OVERCROSSING
OD	OUTSIDE DIAMETER
OF	OUTSIDE FACE
OG	ORIGINAL GROUND
OGAC	OPEN GRADED ASPHALT CONCRETE
OGFC	OPEN GRADED FRICTION COURSE
OH	OVERHEAD
OHWM	ORDINARY HIGH WATER MARK
O-O	OUT TO OUT
Opp	OPPOSITE
OSD	OVERSIDE DRAIN

P

p	PAGE
PAP	PERFORATED ALUMINUM PIPE
PB	PULL BOX
PC	POINT OF CURVATURE,
	PRECAST
PCC	POINT OF COMPOUND CURVE,
	PORTLAND CEMENT CONCRETE
PCMS	PORTABLE CHANGEABLE MESSAGE SIGN
PCP	PERFORATED CONCRETE PIPE,
	PRESTRESSED CONCRETE PIPE
PCVC	POINT OF COMPOUND VERTICAL CURVE
PEC	PERMIT TO ENTER AND CONSTRUCT
Ped	PEDESTRIAN
Ped OC	PEDESTRIAN OVERCROSSING
Ped UC	PEDESTRIAN UNDERCROSSING
Perm Mtl	PERMEABLE MATERIAL

P continued

PG	PROFILE GRADE
PI	POINT OF INTERSECTION
PJP	PARTIAL JOINT PENETRATION
Pkwy	PARKWAY
₱,PL	PLATE
P/L	PROPERTY LINE
PM	POST MILE,
	TIME FROM NOON TO MIDNIGHT
PN	PAVING NOTCH
POC	POINT OF HORIZONTAL CURVE
POT	POINT OF TANGENT
POVC	POINT OF VERTICAL CURVE
PP	PIPE PILE,
	PLASTIC PIPE,
	POWER POLE
PPL	PREFORMED PERMEABLE LINER
PPP	PERFORATED PLASTIC PIPE
PRC	POINT OF REVERSE CURVE
PRF	PAVEMENT REINFORCING FABRIC
PRVC	POINT OF REVERSE VERTICAL CURVE
PS&E	PLANS, SPECIFICATIONS AND ESTIMATES
PS, P/S	PRESTRESSED
PSP	PERFORATED STEEL PIPE
PT	POINT OF TANGENCY
PVC	POLYVINYL CHLORIDE
Pvmt	PAVEMENT

Q

Qty	QUANTITY

R

R	RADIUS
R & D	REMOVE AND DISPOSE
R & S	REMOVE AND SALVAGE
R/C	RATE OF CHANGE
RCA	REINFORCED CONCRETE ARCH
RCB	REINFORCED CONCRETE BOX
RCP	REINFORCED CONCRETE PIPE
RCPA	REINFORCED CONCRETE PIPE ARCH
Rd	ROAD
Reinf	REINFORCED,
	REINFORCEMENT,
	REINFORCING
Rel	RELOCATE
Repl	REPLACEMENT
Ret	RETAINING
Rev	REVISED, REVISION
Rdwy	ROADWAY
RHMA	RUBBERIZED HOT MIX ASPHALT
Riv	RIVER
RM	ROAD-MIXED
RP	RADIUS POINT,
	REFERENCE POINT
RR	RAILROAD
RSP	ROCK SLOPE PROTECTION,
	REVISED STANDARD PLAN
Rt	RIGHT
Rte	ROUTE
RW	REDWOOD,
	RETAINING WALL
R/W	RIGHT OF WAY
Rwy	RAILWAY

S

S	SOUTH,
	SUPPLEMENT
SAE	STRUCTURE APPROACH EMBANKMENT
Salv	SALVAGE
SAPP	STRUCTURAL ALUMINUM PLATE PIPE
SB	SOUTHBOUND
SC	SAND CUSHION
SCSP	SLOTTED CORRUGATED STEEL PIPE
SD	STORM DRAIN
Sec	SECOND,
	SECTION
Sep	SEPARATION
SG	SUBGRADE
Shld	SHOULDER
Sht	SHEET
Sim	SIMILAR
₤	STATION LINE
SM	SELECTED MATERIAL
Spec	SPECIAL,
	SPECIFICATIONS
SPP	SLOTTED PLASTIC PIPE
SS	SLOPE STAKE
SSBM	STRAP AND SADDLE BRACKET METHOD
SSD	STRUCTURAL SECTION DRAIN
SSPA	STRUCTURAL STEEL PLATE ARCH
SSPP	STRUCTURAL STEEL PLATE PIPE
SSPPA	STRUCTURAL STEEL PLATE PIPE ARCH
SSRP	STEEL SPIRAL RIB PIPE
St	STREET
Sta	STATION
STBB	SINGLE THRIE BEAM BARRIER
Std	STANDARD
Str	STRUCTURE
Surf	SURFACING
SW	SIDEWALK,
	SOUND WALL
Swr	SEWER
Sym	SYMMETRICAL
S4S	SURFACE 4 SIDES

T

T	SEMI-TANGENT
Tan	TANGENT
TBB	THRIE BEAM BARRIER
Tbr	TIMBER
TC	TOP OF CURB
TCB	TRAFFIC CONTROL BOX
TCE	TEMPORARY CONSTRUCTION EASEMENT
Tel	TELEPHONE
Temp	TEMPORARY
TG	TOP OF GRADE
Tot	TOTAL
TP	TELEPHONE POLE
TPB	TREATED PERMEABLE BASE
TPM	TREATED PERMEABLE MATERIAL
Trans	TRANSITION

T continued

TS	TRANSVERSE,
	TRAFFIC SIGNAL,
	TUBULAR STEEL
Typ	TYPICAL

U

UC	UNDERCROSSING
UD	UNDERDRAIN
UG	UNDERGROUND
UON	UNLESS OTHERWISE NOTED
UP	UNDERPASS

V

V	VALVE,
	DESIGN SPEED
Var	VARIABLE,
	VARIES
VC	VERTICAL CURVE
VCP	VITRIFIED CLAY PIPE
Vert	VERTICAL
Via	VIADUCT
Vol	VOLUME

W

W	WEST,
	WIDTH
WB	WESTBOUND
WH	WEEP HOLE
WM	WIRE MESH
WS	WATER SURFACE
WSP	WELDED STEEL PIPE
Wt	WEIGHT
WV	WATER VALVE
WW	WINGWALL
WWLOL	WINGWALL LAYOUT LINE

X

X Sec	CROSS SECTION
Xing	CROSSING

Y

Yr	YEAR
Yrs	YEARS

Dist	COUNTY	ROUTE	POST MILES TOTAL PROJECT	SHEET No.	TOTAL SHEETS
01	Men	1	43.7/69.7	11	19

Grace M. Tsushima
REGISTERED CIVIL ENGINEER

July 19, 2013
PLANS APPROVAL DATE

REGISTERED PROFESSIONAL ENGINEER Grace M. Tsushima No. C49814 Exp. 9-30-14 CIVIL STATE OF CALIFORNIA

THE STATE OF CALIFORNIA OR ITS OFFICERS OR AGENTS SHALL NOT BE RESPONSIBLE FOR THE ACCURACY OR COMPLETENESS OF SCANNED COPIES OF THIS PLAN SHEET.

TO ACCOMPANY PLANS DATED May 09, 2016

UNIT OF MEASUREMENT SYMBOLS:

Some of the symbols used in the project plan quantity tables and in the Bid Item List are:

TABLE A

SYMBOL USED	DEFINITIONS
ACRE	ACRE
CF	CUBIC FOOT
CY	CUBIC YARD
EA	EACH
GAL	GALLON
LB	POUND
LF	LINEAR FOOT
SQFT	SQUARE FOOT
SQYD	SQUARE YARD
STA	100 FEET
TAB	TABLET
TON	2,000 POUNDS

Some of the symbols used in the plans other than in the project plan quantity tables are:

TABLE B

SYMBOL USED	DEFINITIONS
ksi	KIPS PER SQUARE INCH
ksf	KIPS PER SQUARE FOOT
psi	POUNDS PER SQUARE INCH
psf	POUNDS PER SQUARE FOOT
lb/ft^3, pcf	POUNDS PER CUBIC FOOT
tsf	TONS PER SQUARE FOOT
mph, MPH *	MILES PER HOUR
ø	NOMINAL DIAMETER
oz	OUNCE
lb	POUND
kip	1,000 POUNDS
cal	CALORIE
ft	FOOT OR FEET
gal	GALLON

* For use on a sign panel only

STATE OF CALIFORNIA
DEPARTMENT OF TRANSPORTATION

ABBREVIATIONS (SHEET 2 OF 2)

NO SCALE

RSP A10B DATED JULY 19, 2013 SUPERSEDES STANDARD PLAN A10B DATED MAY 20, 2011 - PAGE 2 OF THE STANDARD PLANS BOOK DATED 2010.

REVISED STANDARD PLAN RSP A10B

2010 REVISED STANDARD PLAN RSP A10B

P:\PROJ\01\0E200\drafting\01-0e200\10e200va001.dgn

6-7-13

Dist	COUNTY	ROUTE	POST MILES TOTAL PROJECT	SHEET No.	TOTAL SHEETS
01	Men	1	43.7/69.7	12	19

REGISTERED CIVIL ENGINEER

April 19, 2013
PLANS APPROVAL DATE

REGISTERED PROFESSIONAL ENGINEER Gurinderpal Bhullar No. C48815 Exp. 9-30-14 CIVIL STATE OF CALIFORNIA

THE STATE OF CALIFORNIA OR ITS OFFICERS OR AGENTS SHALL NOT BE RESPONSIBLE FOR THE ACCURACY OR COMPLETENESS OF SCANNED COPIES OF THIS PLAN SHEET.

TO ACCOMPANY PLANS DATED May 09, 2016

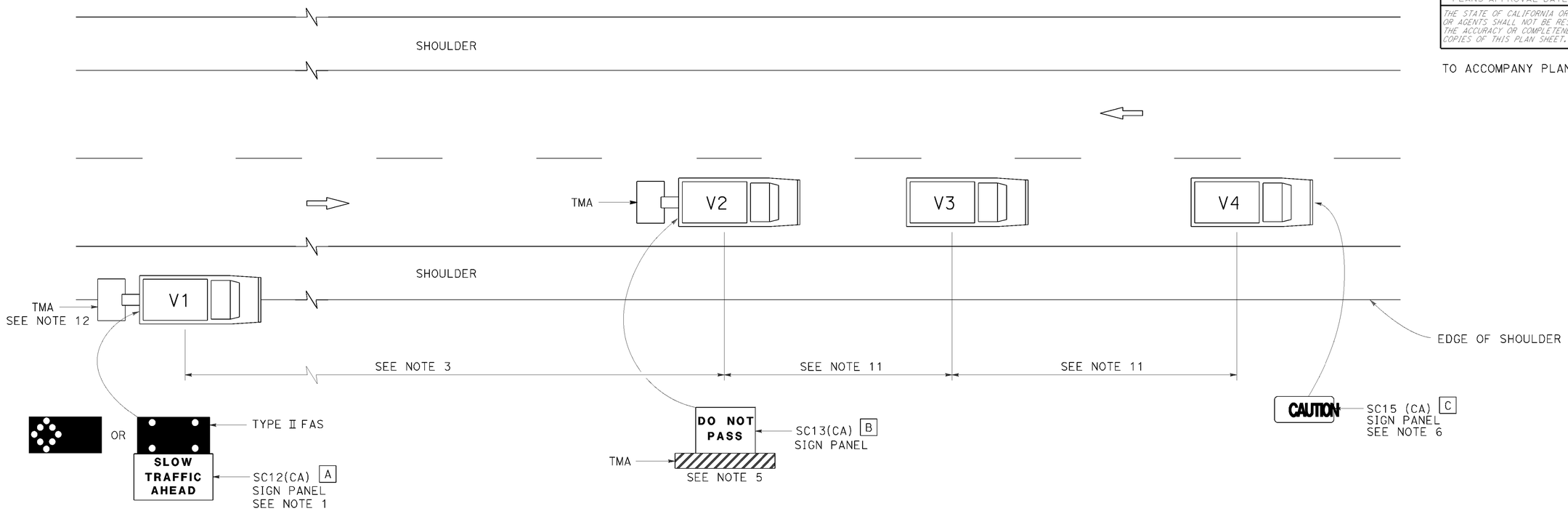

LEGEND

V1	SIGN VEHICLE
V2	SHADOW VEHICLE
V3	WORK/APPLICATION VEHICLE
V4	SIGN VEHICLE
TMA	TRUCK-MOUNTED ATTENUATOR
	FLASHING ARROW SIGN (FAS) IN FLASHING CAUTION MODE
	FLASHING ARROW SIGN (FAS) IN ALTERNATING DIAMOND CAUTION

SIGN PANEL SIZE (Min)

A	72" x 42"
B	54" x 42"
C	54" x 24"

NOTES:

1. Either a changeable message sign or a SC12(CA) "SLOW TRAFFIC AHEAD" sign shall be mounted on the rear of sign vehicle V1. The changeable message sign shall be sequenced to show the "CAUTION" message first, follow by the "SLOW TRAFFIC AHEAD" message. A Type II flashing arrow sign may be used with the SC12(CA) sign panel.
2. Sign vehicle V1 should be positioned where highly visible when shoulders are not available.
3. If traffic queues develop, sign vehicle V1 should be positioned upstream from the end of queue.
4. Vehicle-mounted sign panels shall have Type III or above retroreflective sheeting, black on white, or black on fluorescent orange, with 6" minimum series D letters per Caltrans sign specifications.
5. Shadow vehicle shall be equipped with a truck-mounted attenuator. The sign panel shown shall be mounted on the rear of shadow vehicle V2. The message "LANE CLOSED" may be used in place of the "DO NOT PASS" message.
6. The sign panel shown shall be mounted on the front of sign vehicle V4, facing opposing traffic.
7. All vehicles shall be equipped with flashing or rotating amber lights.
8. Sign vehicle V4 will not be required when the work and vehicles V2 and V3 are 2' or more from the centerline of the highway during the work or application operations.
9. All vehicles used for lane closures shall be equipped with two-way radios and the vehicle operators shall maintain communication during the work or application operation.
10. This plan shall not be used where workers would be on foot in the work area. Use a stationary type lane closure (Revised Standard Plan T13) for this condition.
11. Minimize spacing between vehicles V2 and V3 and vehicles V3 and V4 to deter road users from driving in between them.
12. If sign vehicle V1 encroaches into the traffic lane due to insufficient shoulder width, sign vehicle V1 shall be equipped with a truck-mounted attenuator. Sign vehicle V1 shall stay as close to the edge of shoulder as practicable.

STATE OF CALIFORNIA
DEPARTMENT OF TRANSPORTATION

TRAFFIC CONTROL SYSTEM FOR MOVING LANE CLOSURE ON TWO LANE HIGHWAYS

NO SCALE

RSP T17 DATED APRIL 19, 2013 SUPERSEDES STANDARD PLAN T17
DATED MAY 20, 2011 - PAGE 245 OF THE STANDARD PLANS BOOK DATED 2010.

REVISED STANDARD PLAN RSP T17

2010 REVISED STANDARD PLAN RSP T17

P:\PROJ\01\0E200\drafting\01-0e200\10e200vd002.dgn

12-18-12

DIST	COUNTY	ROUTE	POST MILES TOTAL PROJECT	SHEET No.	TOTAL SHEETS
01	Men	1	43.7/69.7	13	19

REGISTERED CIVIL ENGINEER 4-20-16 DATE

May 09, 2016
PLANS APPROVAL DATE

REGISTERED PROFESSIONAL ENGINEER TIMOTHY J. POWELL No. C 61037 Exp. 12-31-16 CIVIL STATE OF CALIFORNIA

The State of California or its officers or agents shall not be responsible for the accuracy or completeness of electronic copies of this plan sheet.

ALBION RIVER BRIDGE BR NO 10-0136

QUANTITIES

EPOXY RESIN INJECTION	137	LF
REPAIR SPALLED SURFACE AREA	60	SQFT
CORE CONCRETE (1¼")	63	LF
BRIDGE REMOVAL (PORTION)	LUMP	SUM
STRUCTURAL CONCRETE, BRIDGE	23	CY
DRILL AND BOND DOWEL	204	LF
BAR REINFORCING STEEL (BRIDGE)	3,830	LB
TIMBER HARDWARE	285	LB
MISCELLANEOUS METAL (BRIDGE)	88	LB

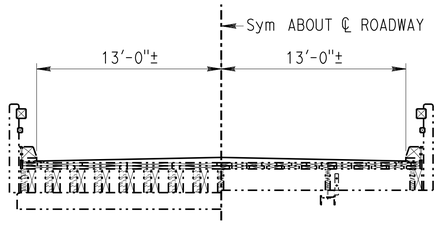

TIMBER SPANS STEEL TRUSS

ALBION RIVER - TYPICAL SECTION

3/16" = 1'

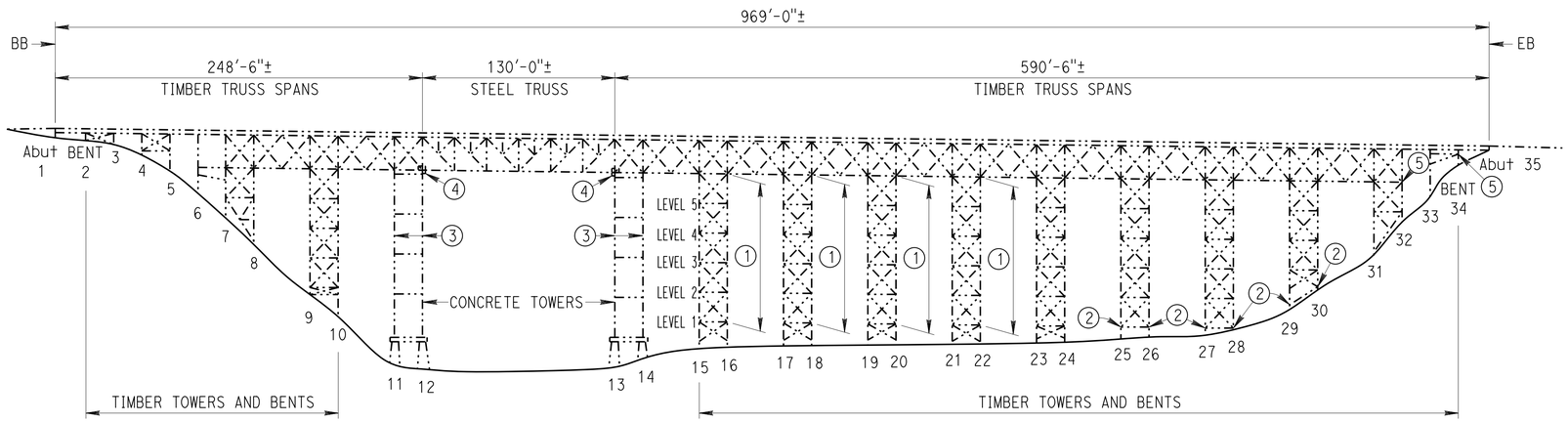

ALBION RIVER - ELEVATION

1" = 50'

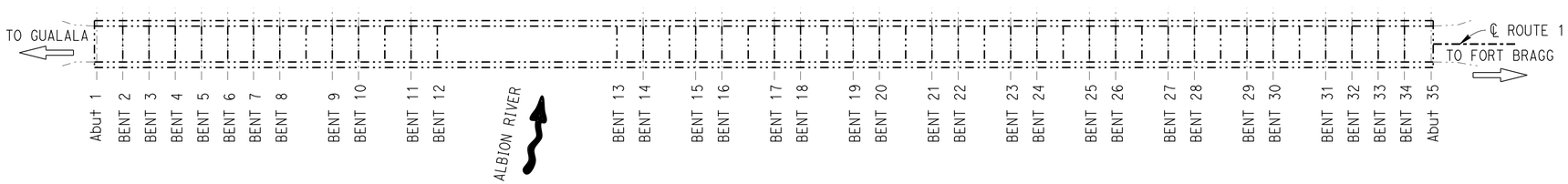

ALBION RIVER - PLAN

Br No. 10-0136, ROUTE 1, PM 43.74
1" = 50'

NOTES: (APPLY TO ALL SHEETS)

····-·····- Indicates existing.

NOTES: (APPLY TO THIS SHEET ONLY)

(1) Indicates limits of bridge removal, portion and place ¾" Ø bolt and/or threaded rod connectors at timber Bents 15 through 22 at locations determined by the Engineer. For details see ALBION RIVER DETAILS No. 1" sheet.

(2) Repair checks, splits and rot in the bottom transverse horizontal timber tower members located on top of foundation pedestals with epoxy paste and epoxy resin injection at locations determined by the Engineer at Bents 25, 26, 27, 28, 29 and 30.

(3) Indicates repair spalled surface area at locations determined by the Engineer at the concrete towers at Bents 11, 12, 13 and 14. See "ALBION RIVER DETAILS No. 2" sheet.

(4) Widen steel truss bearing seat on concrete towers at Bents 12 and 13. See "ALBION RIVER DETAILS No. 3" sheet.

(5) Repair checks, splits and rot in the top transverse horizontal timber tower members east of the catwalk with epoxy paste and epoxy resin injection at locations determined by the Engineer at Bents 32 and 34.

INDEX TO PLANS

SHEET No.	TITLE
1	GENERAL PLAN No. 1
2	GENERAL PLAN No. 2
3	GENERAL PLAN No. 3
4	ALBION RIVER DETAILS No. 1
5	ALBION RIVER DETAILS No. 2
6	ALBION RIVER DETAILS No. 3
7	TEN MILE RIVER RAILING DETAILS

STANDARD PLANS DATED 2010

SHEET No.	TITLE
A10A	ABBREVIATIONS (SHEET 1 OF 2)
RSP A10B	ABBREVIATIONS (SHEET 2 OF 2)
A10C	LINES AND SYMBOLS (SHEET 1 OF 3)

NOTE:
THE CONTRACTOR MUST VERIFY ALL CONTROLLING FIELD DIMENSIONS BEFORE ORDERING OR FABRICATING ANY MATERIAL.

Michael J. Lee 4-20-16
DESIGN ENGINEER

	BY	CHECKED			
DESIGN	TIM POWELL	KHANH TRUONG	LOAD FACTOR DESIGN	LIVE LOADING: HS20-44 AND ALTERNATIVE AND PERMIT DESIGN LOAD	
DETAILS	GF BIDWELL	KHANH TRUONG	LAYOUT	GF BIDWELL	KHANH TRUONG
QUANTITIES	TIM POWELL	KHANH TRUONG	SPECIFICATIONS	JENNIFER RAMIREZ	PLANS AND SPECS COMPARED JENNIFER RAMIREZ

STATE OF CALIFORNIA
DEPARTMENT OF TRANSPORTATION

DIVISION OF MAINTENANCE
STRUCTURE MAINTENANCE DESIGN

BRIDGE No. VARIOUS
POST MILE VARIES

ROUTE 1 BRIDGES (REPAIR TIMBER, CONCRETE, STEEL RAILING & TREAT DECK)

GENERAL PLAN No. 1

STRUCTURES MAINTENANCE GENERAL PLAN SHEET (ENGLISH) (REV. 09-01-10)

ORIGINAL SCALE IN INCHES FOR REDUCED PLANS 0 1 2 3

UNIT: 3488
PROJECT NUMBER & PHASE: 0114000015 1
CONTRACT No.: 01-0E2001

DISREGARD PRINTS BEARING EARLIER REVISION DATES
REVISION DATES 5-6-15 1-15-16 3-9-16 4-20-16
SHEET 1 OF 7

FILE => 01-0e2001_01gp01.dgn

USERNAME => s133662 DATE PLOTTED => 10-JUN-2016 TIME PLOTTED => 09:29

DIST	COUNTY	ROUTE	POST MILES TOTAL PROJECT	SHEET No.	TOTAL SHEETS
01	Men	1	43.7/69.7	14	19

REGISTERED CIVIL ENGINEER 4-20-16 DATE

May 09, 2016
PLANS APPROVAL DATE

REGISTERED PROFESSIONAL ENGINEER TIMOTHY J. POWELL No. C 61037 Exp. 12-31-16 CIVIL STATE OF CALIFORNIA

The State of California or its officers or agents shall not be responsible for the accuracy or completeness of electronic copies of this plan sheet.

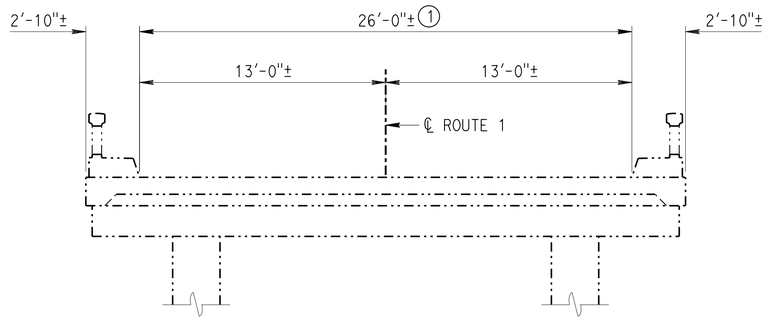

RUSSIAN GULCH
TYPICAL SECTION AT SPAN 29

1/4" = 1'

NOTES: (APPLY TO THIS SHEET ONLY)

1 Indicates limits of prepare concrete bridge deck surface and treat bridge deck with high molecular weight methacrylate.

RUSSIAN GULCH BRIDGE BR NO 10-0151

QUANTITIES

PREPARE CONCRETE BRIDGE DECK SURFACE	520	SQFT
TREAT BRIDGE DECK	520	SQFT
FURNISH BRIDGE DECK TREATMENT MATERIAL	6	GAL

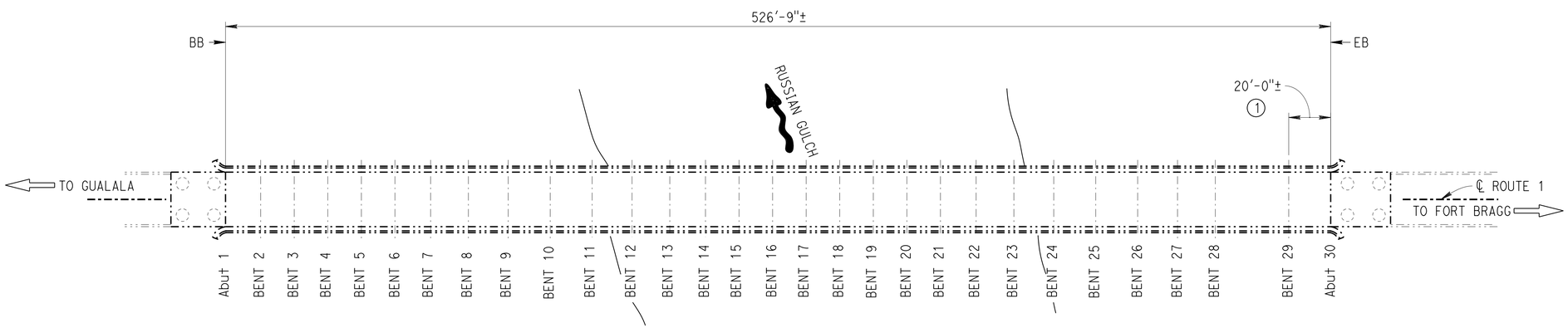

RUSSIAN GULCH - PLAN

Br No. 10-0151, ROUTE 1, PM 52.64
1" = 30'

NOTE:
THE CONTRACTOR MUST VERIFY ALL CONTROLLING FIELD DIMENSIONS BEFORE ORDERING OR FABRICATING ANY MATERIAL.

Michael J. Lee 4-20-16
DESIGN ENGINEER

	BY	CHECKED			
DESIGN	TIM POWELL	KHANH TRUONG	LOAD FACTOR DESIGN	LIVE LOADING: HS20-44 AND ALTERNATIVE AND PERMIT DESIGN LOAD	
DETAILS	GF BIDWELL	KHANH TRUONG	LAYOUT	GF BIDWELL	KHANH TRUONG
QUANTITIES	TIM POWELL	KHANH TRUONG	SPECIFICATIONS	JENNIFER RAMIREZ	PLANS AND SPECS COMPARED JENNIFER RAMIREZ

STATE OF CALIFORNIA
DEPARTMENT OF TRANSPORTATION

DIVISION OF MAINTENANCE
STRUCTURE MAINTENANCE DESIGN

BRIDGE No. VARIOUS
POST MILE VARIES

ROUTE 1 BRIDGES (REPAIR TIMBER, CONCRETE, STEEL RAILING & TREAT DECK)

GENERAL PLAN No. 2

STRUCTURES MAINTENANCE GENERAL PLAN SHEET (ENGLISH) (REV. 09-01-10)

ORIGINAL SCALE IN INCHES FOR REDUCED PLANS 0 1 2 3

UNIT: 3488
PROJECT NUMBER & PHASE: 0114000015 1
CONTRACT No.: 01-0E2001

DISREGARD PRINTS BEARING EARLIER REVISION DATES
REVISION DATES: 5-6-15 1-15-16 3-9-16 4-20-16

SHEET 2 OF 7

FILE => 01-0e2001_02gp02.dgn

USERNAME => s132662 DATE PLOTTED => 10-JUN-2016 TIME PLOTTED => 09:29

DIST	COUNTY	ROUTE	POST MILES TOTAL PROJECT	SHEET No.	TOTAL SHEETS
01	Men	1	43.7/69.7	15	19

REGISTERED CIVIL ENGINEER — DATE 4-20-16

May 09, 2016
PLANS APPROVAL DATE

REGISTERED PROFESSIONAL ENGINEER TIMOTHY J. POWELL No. C 61037 Exp. 12-31-16 CIVIL STATE OF CALIFORNIA

The State of California or its officers or agents shall not be responsible for the accuracy or completeness of electronic copies of this plan sheet.

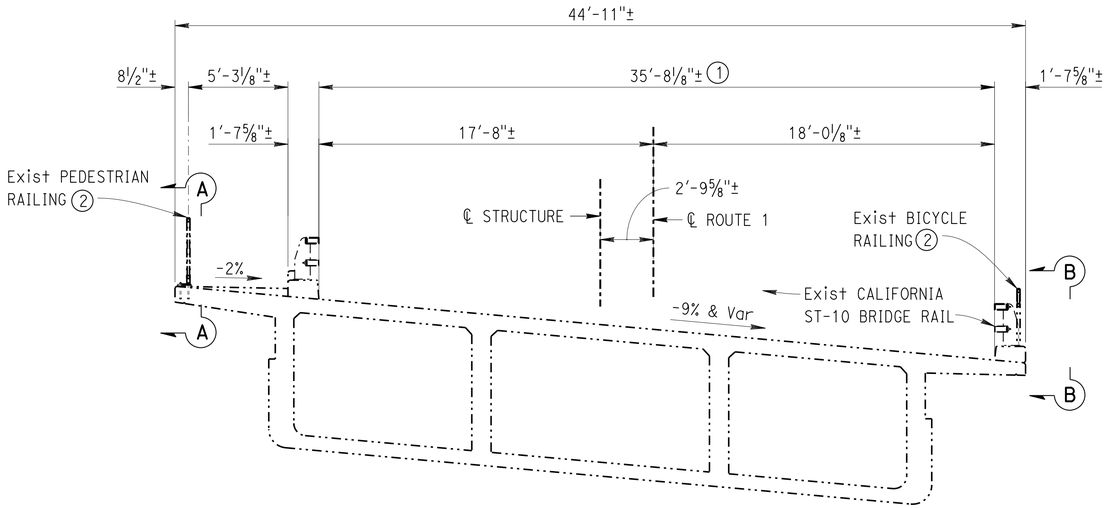

TEN MILE RIVER - TYPICAL SECTION

¼" = 1'

TEN MILE RIVER BRIDGE — BR NO 10-0274

QUANTITIES

PREPARE CONCRETE BRIDGE DECK SURFACE	52,800	SQFT
TREAT BRIDGE DECK	52,800	SQFT
FURNISH BRIDGE DECK TREATMENT MATERIAL	587	GAL
RECONSTRUCT METAL RAILING (BRIDGE)	6	LF

NOTES: (APPLY TO THIS SHEET ONLY)

1. Indicates limits of prepare concrete bridge deck surface and treat bridge deck with high molecular weight methacrylate.
2. Reconstruct pedestrian and bicycle railing slip joints at abutments and hinge. See "PARTIAL ELEVATION A-A" and "PARTIAL ELEVATION B-B" on "TEN MILE RIVER RAILING DETAILS" sheet.

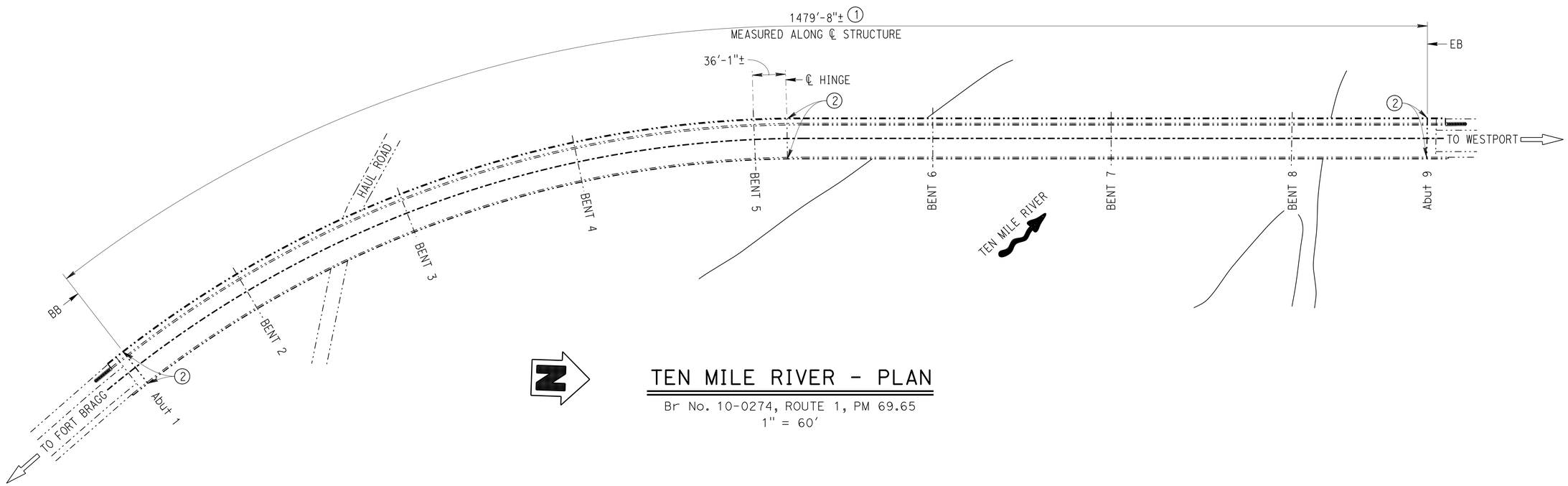

TEN MILE RIVER - PLAN

Br No. 10-0274, ROUTE 1, PM 69.65
1" = 60'

NOTE:
THE CONTRACTOR MUST VERIFY ALL CONTROLLING FIELD DIMENSIONS BEFORE ORDERING OR FABRICATING ANY MATERIAL.

Michael J. Lee 4-20-16
DESIGN ENGINEER

	BY	CHECKED			
DESIGN	TIM POWELL	KHANH TRUONG	LOAD FACTOR DESIGN	LIVE LOADING: HS20-44 AND ALTERNATIVE AND PERMIT DESIGN LOAD	
DETAILS	GF BIDWELL	KHANH TRUONG	LAYOUT	GF BIDWELL	KHANH TRUONG
QUANTITIES	TIM POWELL	KHANH TRUONG	SPECIFICATIONS	JENNIFER RAMIREZ	JENNIFER RAMIREZ (PLANS AND SPECS COMPARED)

STATE OF CALIFORNIA
DEPARTMENT OF TRANSPORTATION

DIVISION OF MAINTENANCE
STRUCTURE MAINTENANCE DESIGN

BRIDGE No. VARIOUS
POST MILE VARIES

ROUTE 1 BRIDGES (REPAIR TIMBER, CONCRETE, STEEL RAILING & TREAT DECK)

GENERAL PLAN No. 3

STRUCTURES MAINTENANCE GENERAL PLAN SHEET (ENGLISH) (REV. 09-01-10)

ORIGINAL SCALE IN INCHES FOR REDUCED PLANS 0 1 2 3

UNIT: 3488
PROJECT NUMBER & PHASE: 0114000015 1
CONTRACT No.: 01-0E2001

DISREGARD PRINTS BEARING EARLIER REVISION DATES
REVISION DATES: 5-6-15 1-15-16 3-9-16 4-20-16

SHEET 3 OF 7

FILE => 01-0e2001_03gp03.dgn

USERNAME => s132682 DATE PLOTTED => 10-JUN-2016 TIME PLOTTED => 09:29

DIST	COUNTY	ROUTE	POST MILES TOTAL PROJECT	SHEET No.	TOTAL SHEETS
01	Men	1	43.7/69.7	16	19

T J Powell 4-20-16
REGISTERED CIVIL ENGINEER DATE

May 09, 2016
PLANS APPROVAL DATE

REGISTERED PROFESSIONAL ENGINEER TIMOTHY J. POWELL No. C 61037 Exp. 12-31-16 CIVIL STATE OF CALIFORNIA

The State of California or its officers or agents shall not be responsible for the accuracy or completeness of electronic copies of this plan sheet.

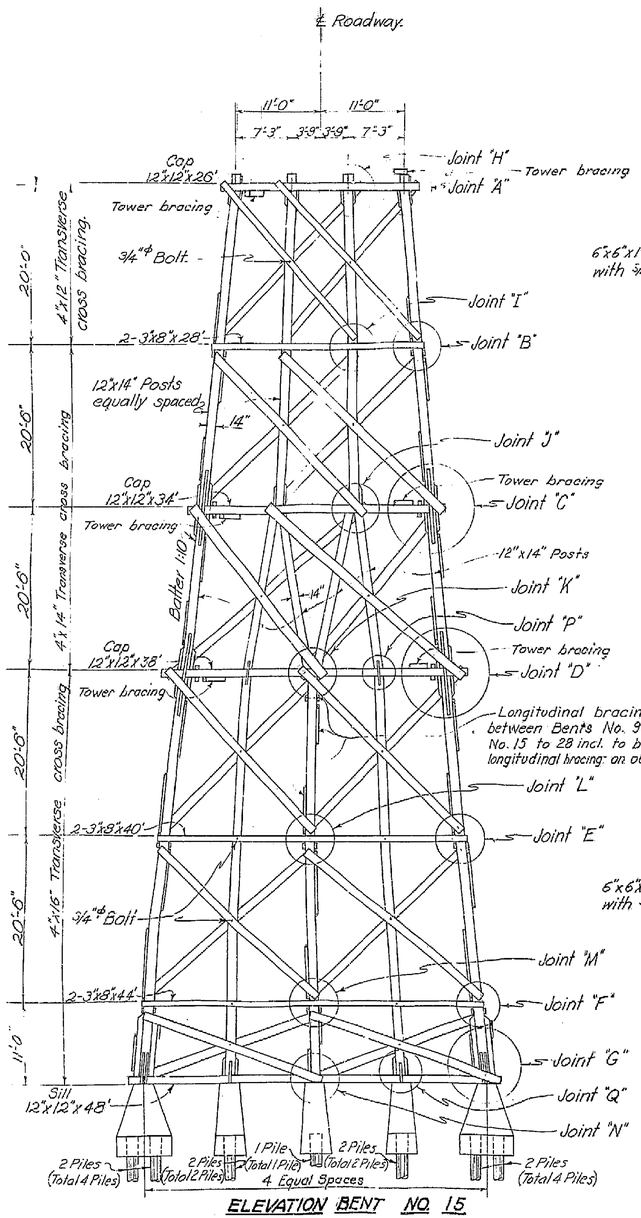

ELEVATION BENT NO. 15
Other bents similar.

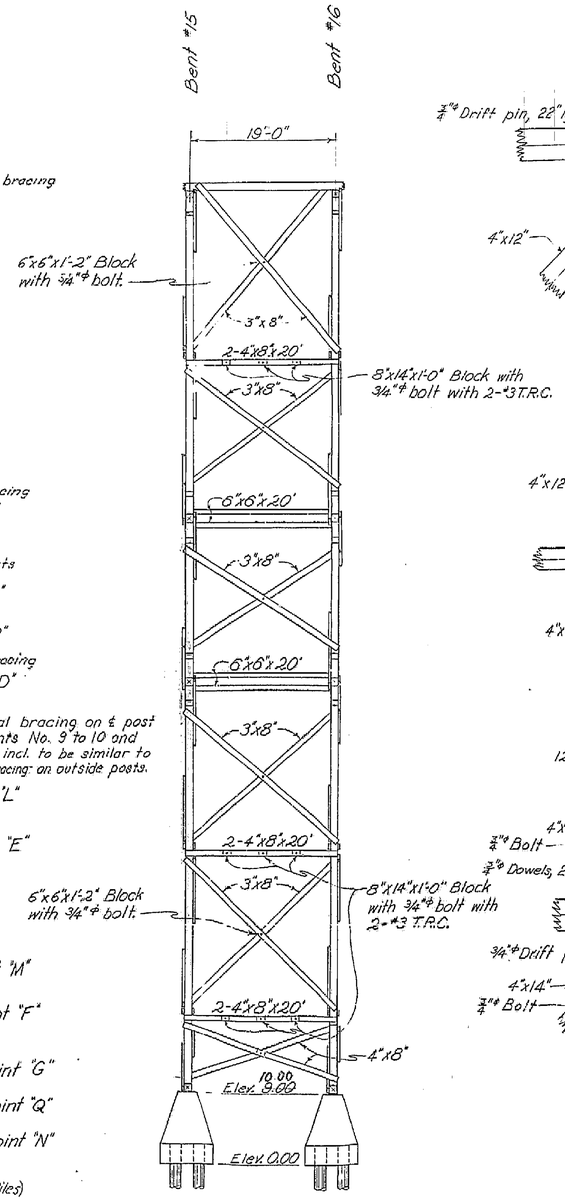

LONGITUDINAL BRACING ELEVATION

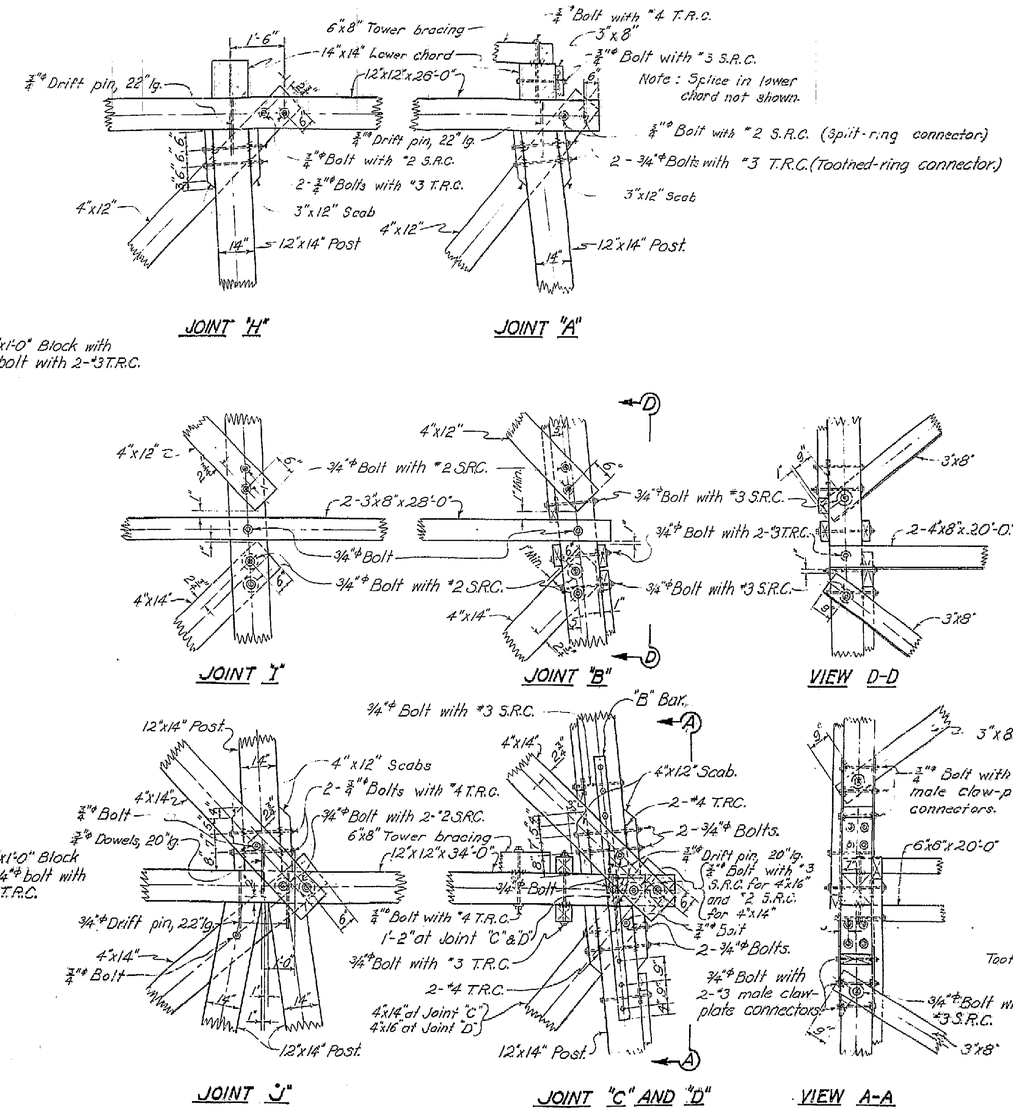

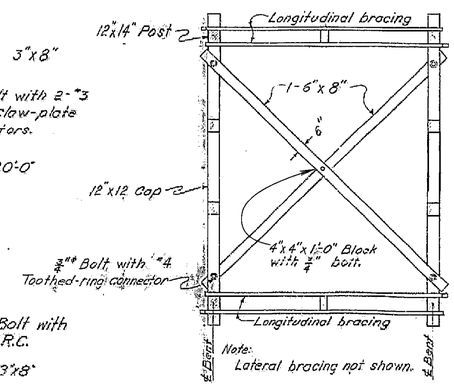

PLAN TOWER BRACING
No Scale.

EXISTING TIMBER TOWER DETAILS

DETAILS SHOWN FOR ILLUSTRATIVE PURPOSES ONLY
NO SCALE

LOCATION (TIMBER BENT/ TOWER/TRUSS SECTION)		SUBSTRUCTURE MEMBERS NUMBER OF NUTS AND/OR 3/4" BOLTS/3/4" THREADED RODS TO BE REPLACED
TOWER 15-16	BENT 15	20
	X-BRACES B15-B16	6
	BENT 16	60
TOWER 17-18	BENT 17	42
	X-BRACES B17-B18	4
	BENT 18	36
TOWER 19-20	BENT 19	110
	X-BRACES B19-B20	8
	BENT 20	110
TOWER 21-22	BENT 21	90
	X-BRACES B21-B22	10
	BENT 22	74

CONNECTOR REPLACEMENT TABLE

NOTE:
THE CONTRACTOR MUST VERIFY ALL CONTROLLING FIELD DIMENSIONS BEFORE ORDERING OR FABRICATING ANY MATERIAL.

	BY	CHECKED
DESIGN	TIM POWELL	KHANH TRUONG
DETAILS	GF BIDWELL	KHANH TRUONG
QUANTITIES	TIM POWELL	KHANH TRUONG

STATE OF CALIFORNIA
DEPARTMENT OF TRANSPORTATION

DIVISION OF MAINTENANCE
STRUCTURE MAINTENANCE DESIGN

BRIDGE No. VARIOUS
POST MILE VARIES

ROUTE 1 BRIDGES (REPAIR TIMBER, CONCRETE, STEEL RAILING & TREAT DECK)

ALBION RIVER DETAILS No. 1

STRUCTURES MAINTENANCE GENERAL PLAN SHEET (ENGLISH) (REV. 09-01-10)

ORIGINAL SCALE IN INCHES FOR REDUCED PLANS 0 1 2 3

UNIT: 3488
PROJECT NUMBER & PHASE: 0114000015 1
CONTRACT No.: 01-0E2001

DISREGARD PRINTS BEARING EARLIER REVISION DATES

REVISION DATES: 5-6-15 | 1-15-16 | 3-9-16 | 4-20-16

SHEET 4 OF 7

P:\PROJ\01\0E200\drafting\01-0e200\01-0e2001_04albiondets1.dgn
USERNAME => s121511 DATE PLOTTED => 21-APR-2016 TIME PLOTTED => 14:46
FILE => 01-0e2001_04albiondets1.dgn

DIST	COUNTY	ROUTE	POST MILES TOTAL PROJECT	SHEET No.	TOTAL SHEETS
01	Men	1	43.7/69.7	17	19

T J Powell 4-20-16
REGISTERED CIVIL ENGINEER DATE

May 09, 2016
PLANS APPROVAL DATE

REGISTERED PROFESSIONAL ENGINEER TIMOTHY J. POWELL No. C 61037 Exp. 12-31-16 CIVIL STATE OF CALIFORNIA

The State of California or its officers or agents shall not be responsible for the accuracy or completeness of electronic copies of this plan sheet.

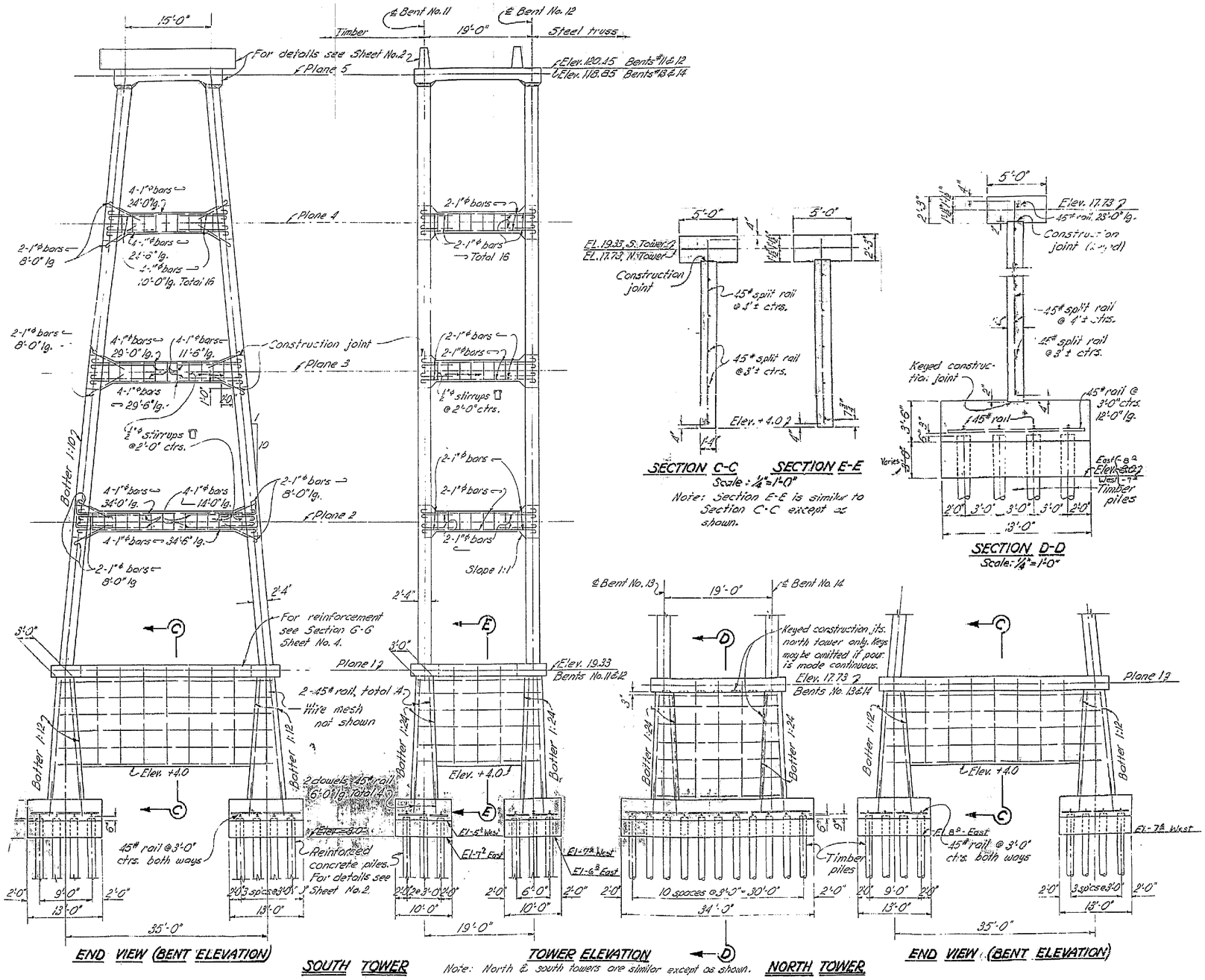

EXISTING CONCRETE TOWER DETAILS

DETAILS SHOWN FOR ILLUSTRATIVE PURPOSES ONLY
NO SCALE

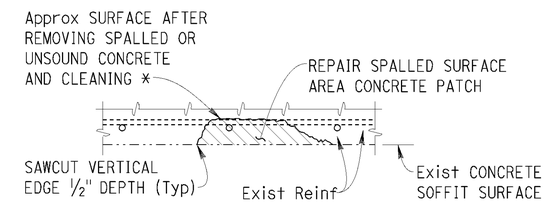

HORIZONTAL SURFACES

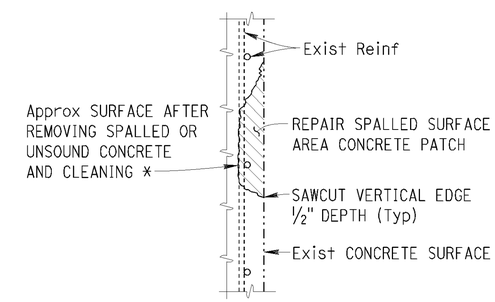

VERTICAL SURFACES

* Remove concrete up to but not beyond reinforcing steel.

SPALL REPAIR DETAIL

LOCATIONS TO BE DETERMINED BY THE ENGINEER.
RETAIN ALL REINFORCEMENT ENCOUNTERED
DURING DECK CONCRETE REMOVAL.
NO SCALE

NOTE:
THE CONTRACTOR MUST VERIFY ALL
CONTROLLING FIELD DIMENSIONS BEFORE
ORDERING OR FABRICATING ANY MATERIAL.

	BY	CHECKED
DESIGN	TIM POWELL	KHANH TRUONG
DETAILS	GF BIDWELL	KHANH TRUONG
QUANTITIES	TIM POWELL	KHANH TRUONG

STATE OF CALIFORNIA
DEPARTMENT OF TRANSPORTATION

DIVISION OF MAINTENANCE
STRUCTURE MAINTENANCE DESIGN

BRIDGE No. VARIOUS
POST MILE VARIES

ROUTE 1 BRIDGES (REPAIR TIMBER, CONCRETE, STEEL RAILING & TREAT DECK)

ALBION RIVER DETAILS No. 2

STRUCTURES MAINTENANCE GENERAL PLAN SHEET (ENGLISH) (REV. 09-01-10)

ORIGINAL SCALE IN INCHES FOR REDUCED PLANS 0 1 2 3

UNIT: 3488
PROJECT NUMBER & PHASE: 0114000015 1
CONTRACT No.: 01-0E2001

DISREGARD PRINTS BEARING EARLIER REVISION DATES → 5-6-15 1-15-16 3-3-16 4-20-16

SHEET 5 OF 7

P:\PROJ\01\0E200\drafting\01-0e200\01-0e2001_05albiondets2.dgn
USERNAME => s121511 DATE PLOTTED => 21-APR-2016 TIME PLOTTED => 14:48
FILE => 01-0e2001_05albiondets2.dgn

DIST	COUNTY	ROUTE	POST MILES TOTAL PROJECT	SHEET No.	TOTAL SHEETS
01	Men	1	43.7/69.7	18	19

REGISTERED CIVIL ENGINEER 4-21-16 DATE

May 09, 2016
PLANS APPROVAL DATE

REGISTERED PROFESSIONAL ENGINEER Kevin Harper No. 42221 Exp. 3/31/18 CIVIL STATE OF CALIFORNIA

The State of California or its officers or agents shall not be responsible for the accuracy or completeness of scanned copies of this plan sheet.

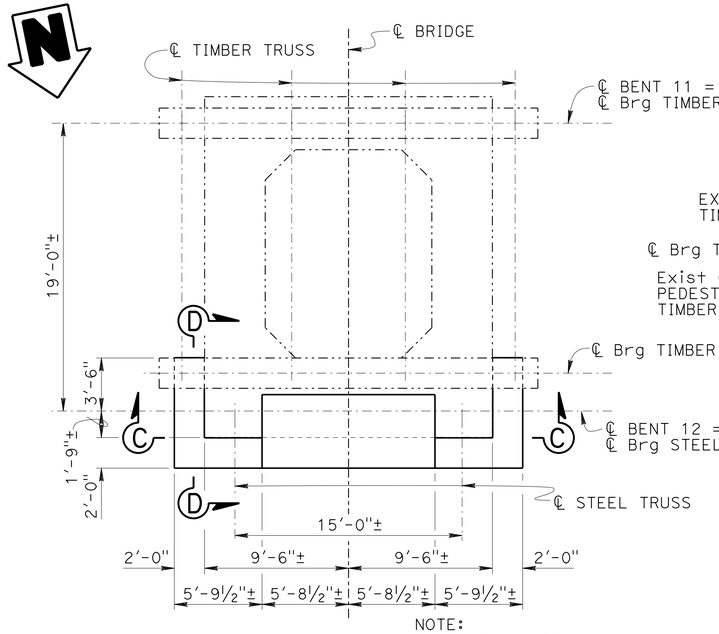

NOTE:
Bent 11 and 12 tower shown,
Bent 13 and 14 tower similar.

EXISTING CONCRETE TOWER PLAN

1" = 5'

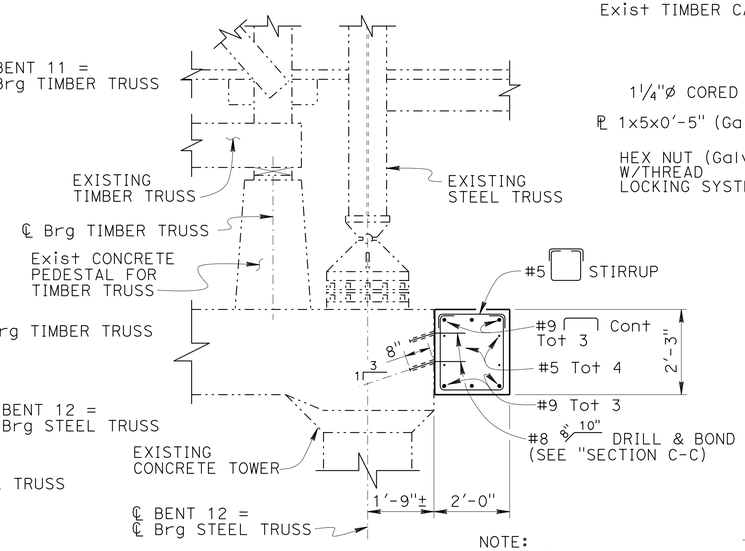

NOTE:
Bent 12 shown,
Bent 13 similar.

SECTION A-A

½" = 1'-0"

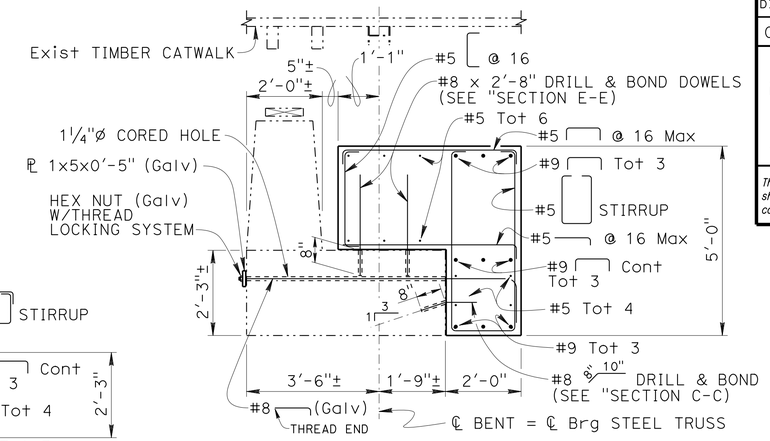

SECTION B-B

½" = 1'-0"

DESIGN NOTES

REINFORCED CONCRETE: f'_c = 3,600 psi
f_y = 60,000 psi

STRUCTURAL STEEL: f_y = 36,000 psi

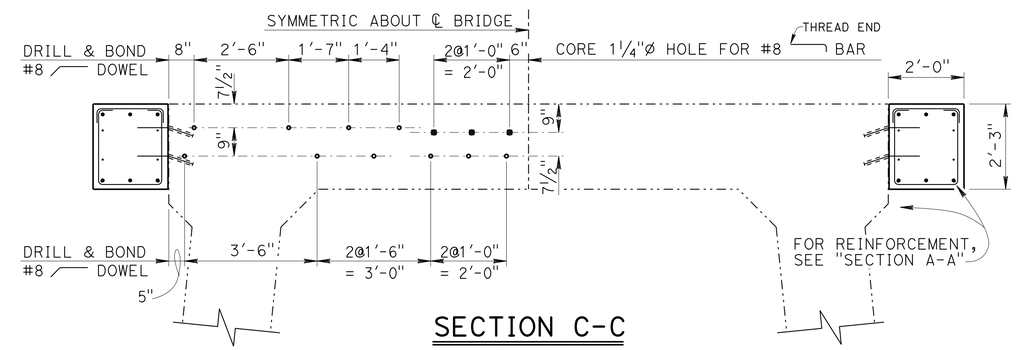

SECTION C-C

½" = 1'-0"

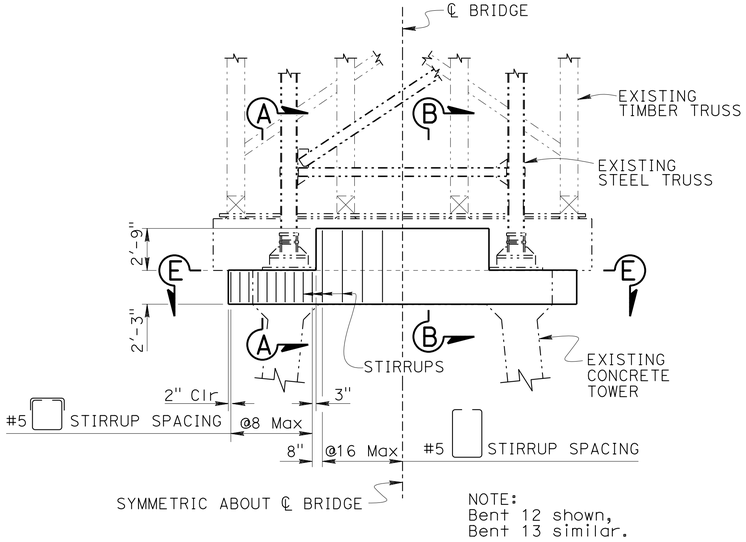

NOTE:
Bent 12 shown,
Bent 13 similar.

EXISTING CONCRETE TOWER ELEVATION

1" = 5'

NOTE:
THE CONTRACTOR SHALL VERIFY ALL CONTROLLING FIELD DIMENSIONS BEFORE ORDERING OR FABRICATING ANY MATERIAL.

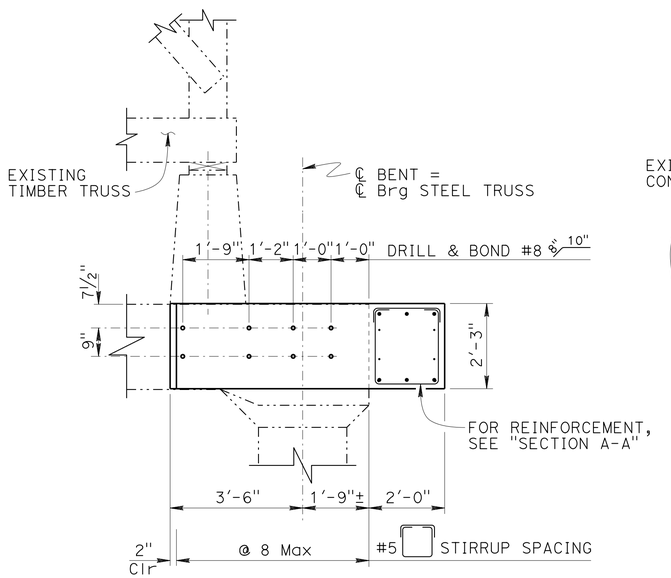

SECTION D-D

½" = 1'-0"

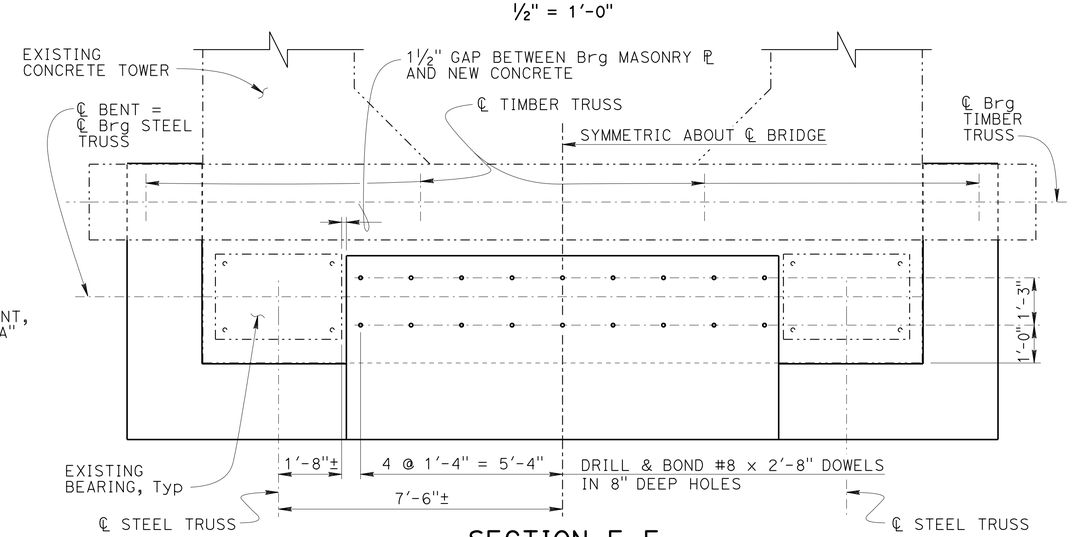

SECTION E-E

½" = 1'-0"

	BY	CHECKED
DESIGN	K. Harper	E. Watson
DETAILS	G. Dickerson	E. Watson
QUANTITIES	Bob Huddleston	Jinrong Zhou

STATE OF CALIFORNIA
DEPARTMENT OF TRANSPORTATION

DIVISION OF ENGINEERING SERVICES
STRUCTURE DESIGN
DESIGN BRANCH 1

BRIDGE NO. 10-0136
POST MILE 43.74

ROUTE 1 BRIDGES (REPAIR TIMBER & CONNECTORS, STEEL RAILING & TREAT DECK)

ALBION RIVER DETAILS No. 3

STRUCTURES DESIGN DETAIL SHEET (ENGLISH) (REV. 09-01-10)

ORIGINAL SCALE IN INCHES FOR REDUCED PLANS 0 1 2 3

UNIT: 3576
PROJECT NUMBER & PHASE: 0114000015 1
CONTRACT NO.: 01-0E2001

DISREGARD PRINTS BEARING EARLIER REVISION DATES

REVISION DATES 12-02-15 01-07-16

SHEET 6 OF 7

FILE => 01-0e2001_06albiondets3.dgn

USERNAME => s132662 DATE PLOTTED => 10-JUN-2016 09:30

DIST	COUNTY	ROUTE	POST MILES TOTAL PROJECT	SHEET No.	TOTAL SHEETS
01	Men	1	43.7/69.7	19	19

REGISTERED CIVIL ENGINEER 4-20-16 DATE

May 09, 2016
PLANS APPROVAL DATE

REGISTERED PROFESSIONAL ENGINEER TIMOTHY J. POWELL No. C 61037 Exp. 12-31-16 CIVIL STATE OF CALIFORNIA

The State of California or its officers or agents shall not be responsible for the accuracy or completeness of electronic copies of this plan sheet.

NOTES: (APPLY TO THIS SHEET ONLY)

All new steel is to be galvanized.

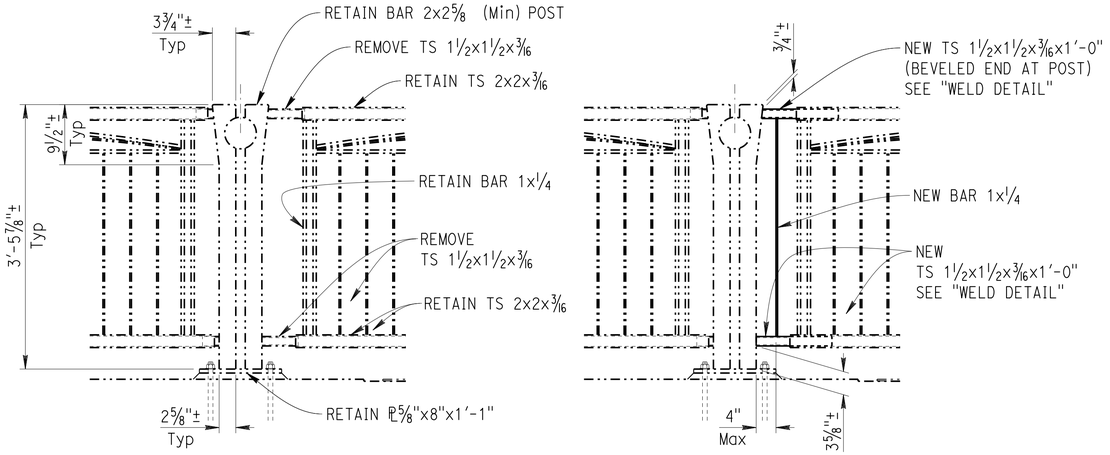

EXISTING RECONSTRUCTION

DETAIL A

Br No. 10-0274
1" = 1'

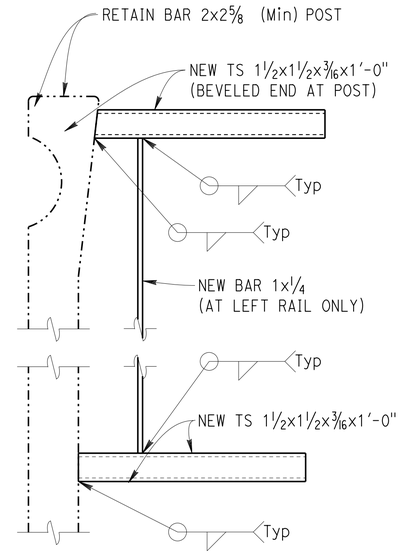

WELD DETAIL

LEFT RAIL SHOWN, RIGHT RAIL SIMILAR
Br No. 10-0274
3" = 1'

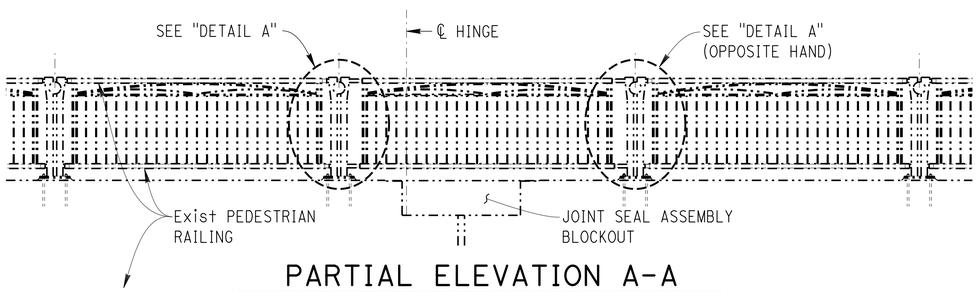

PARTIAL ELEVATION A-A

RAILING AT HINGE SHOWN; SIMILAR AT ABUTMENTS
Br No. 10-0274
⅜" = 1'

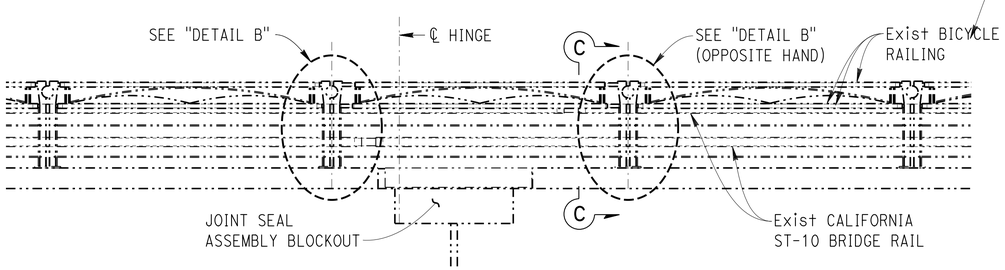

PARTIAL ELEVATION B-B

RAILING AT HINGE SHOWN; SIMILAR AT ABUTMENTS
Br No. 10-0274
⅜" = 1'

NOTE:
THE CONTRACTOR MUST VERIFY ALL CONTROLLING FIELD DIMENSIONS BEFORE ORDERING OR FABRICATING ANY MATERIAL.

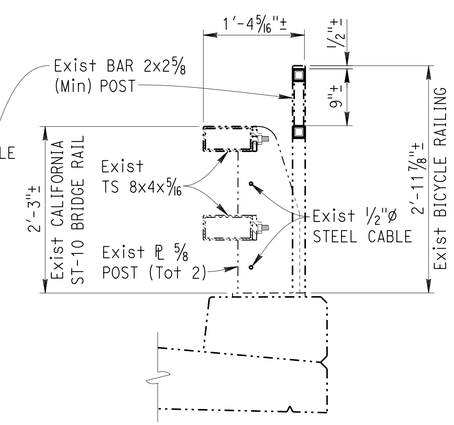

SECTION C-C

Br No. 10-0274
1" = 1'

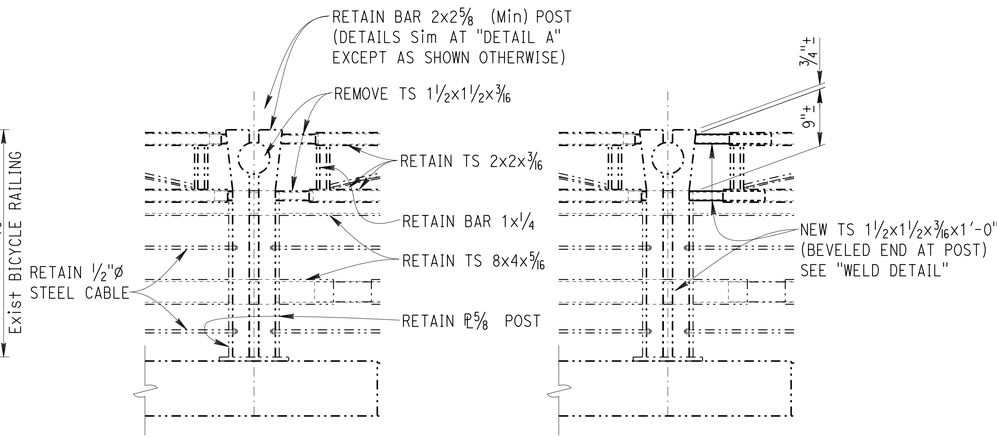

EXISTING RECONSTRUCTION

DETAIL B

Br No. 10-0274
1" = 1'

DESIGN	BY TIM POWELL	CHECKED KHANH TRUONG	STATE OF CALIFORNIA DEPARTMENT OF TRANSPORTATION	DIVISION OF MAINTENANCE STRUCTURE MAINTENANCE DESIGN	BRIDGE No. VARIOUS
DETAILS	BY GF BIDWELL	CHECKED KHANH TRUONG			POST MILE VARIES
QUANTITIES	BY TIM POWELL	CHECKED KHANH TRUONG			

ROUTE 1 BRIDGES (REPAIR TIMBER, CONCRETE, STEEL RAILING & TREAT DECK)

TEN MILE RIVER RAILING DETAILS

STRUCTURES MAINTENANCE GENERAL PLAN SHEET (ENGLISH) (REV. 09-01-10)

ORIGINAL SCALE IN INCHES FOR REDUCED PLANS 0 1 2 3

UNIT: 3488
PROJECT NUMBER & PHASE: 0114000015 1
CONTRACT No.: 01-0E2001

DISREGARD PRINTS BEARING EARLIER REVISION DATES

REVISION DATES: 5-6-15 1-15-16 3-9-16 4-20-16

SHEET 7 OF 7

FILE => 01-0e2001_07tenmiledets.dgn

USERNAME => s132662 DATE PLOTTED => 10-JUN-2016 TIME PLOTTED => 09:30