Dist	COUNTY	ROUTE	POST MILES TOTAL PROJECT	SHEET No.	TOTAL SHEETS
01	DN	101	R4.4/9.4	1	47

STATE OF CALIFORNIA

DEPARTMENT OF TRANSPORTATION

ACNHP-Q101(257)E

PROJECT PLANS FOR CONSTRUCTION ON

STATE HIGHWAY

IN DEL NORTE COUNTY NEAR KLAMATH FROM 0.4 MILES NORTH OF KLAMATH RIVER BRIDGE TO HIGH PRAIRIE CREEK BRIDGE

TO BE SUPPLEMENTED BY STANDARD PLANS DATED 2010

INDEX OF PLANS

SHEET No	DESCRIPTION
1	TITLE SHEET
2	TYPICAL CROSS SECTION
3-20	CONSTRUCTION DETAILS
21	CONSTRUCTION AREA SIGNS
22	TRAFFIC HANDLING DETAILS
23	TRAFFIC HANDLING QUANTITIES
24-29	PAVEMENT DELINEATION QUANTITIES
30	SIGN QUANTITIES
31-32	SUMMARY OF QUANTITIES
33-42	NEW OR REVISED STANDARD PLANS
43-47	STRUCTURE PLANS CONCRETE BARRIER TRANSITIONS

THE STANDARD PLANS LIST APPLICABLE TO THIS CONTRACT IS INCLUDED IN THE NOTICE TO BIDDERS AND SPECIAL PROVISIONS BOOK.

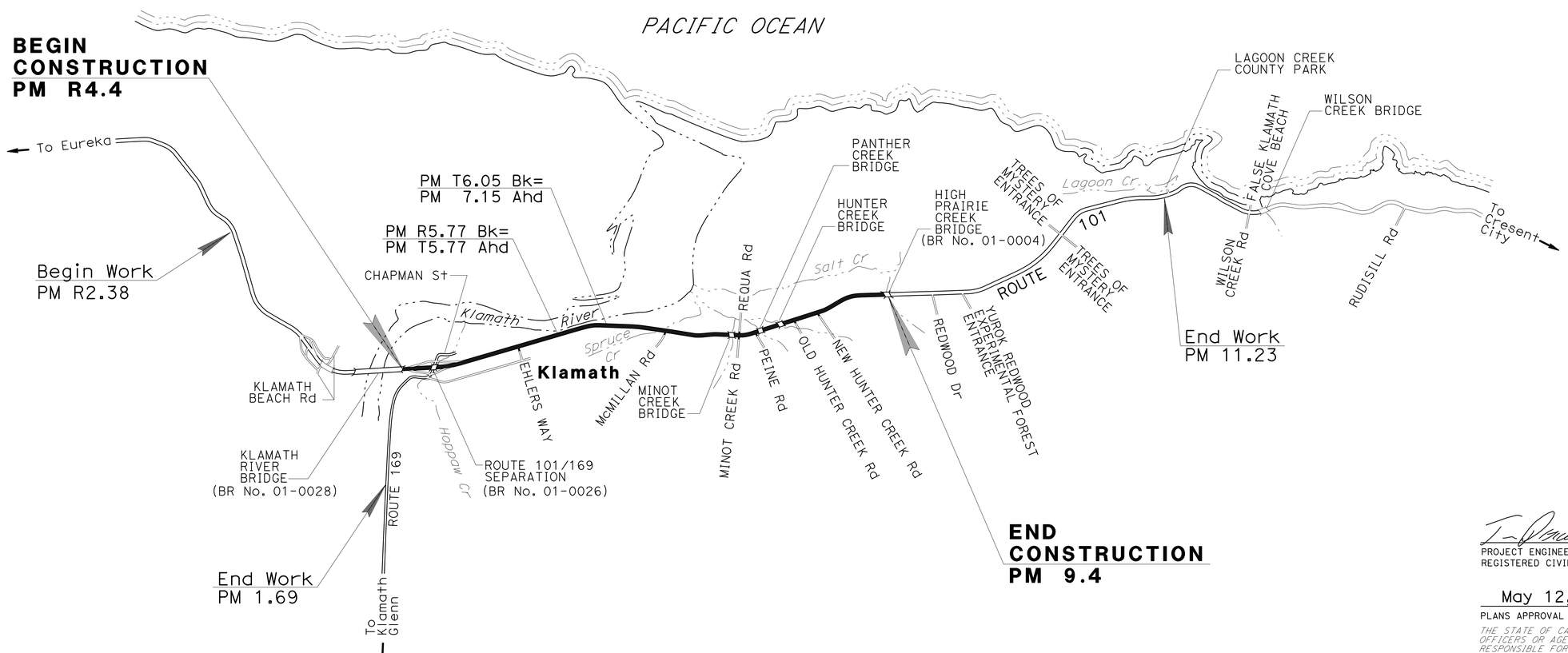

NO SCALE

THE CONTRACTOR SHALL POSSESS THE CLASS (OR CLASSES) OF LICENSE AS SPECIFIED IN THE "NOTICE TO BIDDERS."

PROJECT MANAGER K. CHURCH

DESIGN ENGINEER L. R. ASHLEY

PROJECT ENGINEER REGISTERED CIVIL ENGINEER — DATE 5/12/2014

Thomas Jon Phillips No. 64633 Exp. 6/30/15 CIVIL — REGISTERED PROFESSIONAL ENGINEER — STATE OF CALIFORNIA

May 12, 2014
PLANS APPROVAL DATE

THE STATE OF CALIFORNIA OR ITS OFFICERS OR AGENTS SHALL NOT BE RESPONSIBLE FOR THE ACCURACY OR COMPLETENESS OF SCANNED COPIES OF THIS PLAN SHEET.

CONTRACT No.	01-0B0804
PROJECT ID	0100020445

LAST REVISION 05-12-14 DATE PLOTTED => 02-JUL-2014 TIME PLOTTED => 09:59

Dist	COUNTY	ROUTE	POST MILES TOTAL PROJECT	SHEET No.	TOTAL SHEETS
01	DN	101	R4.4/9.4	2	47

REGISTERED CIVIL ENGINEER 5-12-14 DATE

May 12, 2014
PLANS APPROVAL DATE

REGISTERED PROFESSIONAL ENGINEER Thomas Jon Phillips No. 64633 Exp. 6/30/15 CIVIL STATE OF CALIFORNIA

THE STATE OF CALIFORNIA OR ITS OFFICERS OR AGENTS SHALL NOT BE RESPONSIBLE FOR THE ACCURACY OR COMPLETENESS OF SCANNED COPIES OF THIS PLAN SHEET.

NOTES:

1. DIMENSIONS OF THE PAVEMENT STRUCTURES (STRUCTURAL SECTIONS) ARE SUBJECT TO TOLERANCES SPECIFIED IN THE STANDARD SPECIFICATIONS.
2. SUPERELEVATION AS SHOWN OR AS DIRECTED BY THE ENGINEER.
3. FOR ACCURATE RIGHT OF WAY DATA, CONTACT RIGHT OF WAY ENGINEERING AT THE DISTRICT OFFICE.

PAVEMENT CLIMATE REGION
NORTH COAST

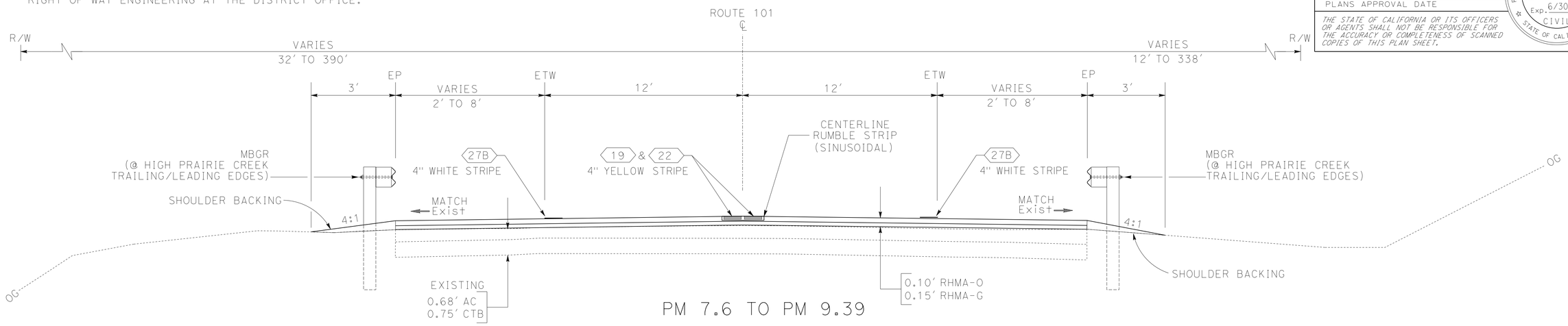

PM 7.6 TO PM 9.39

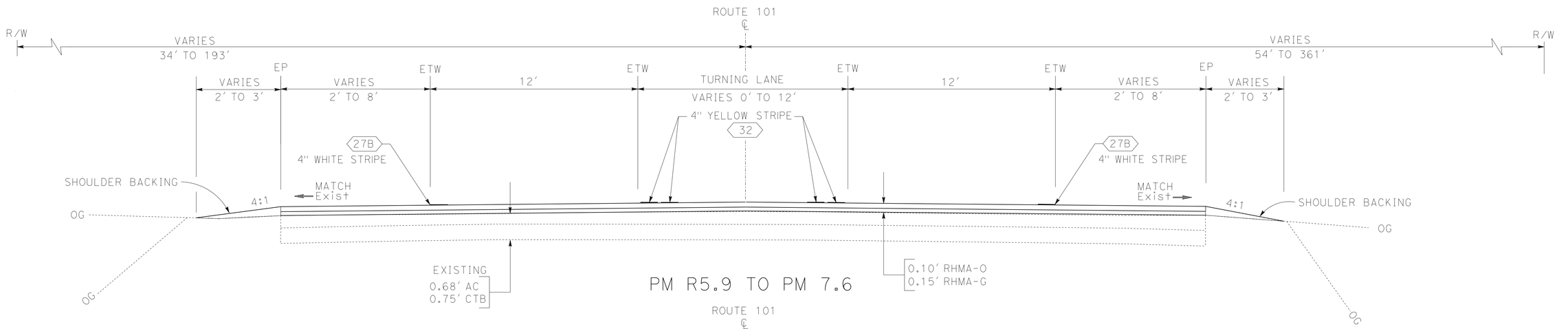

PM R5.9 TO PM 7.6

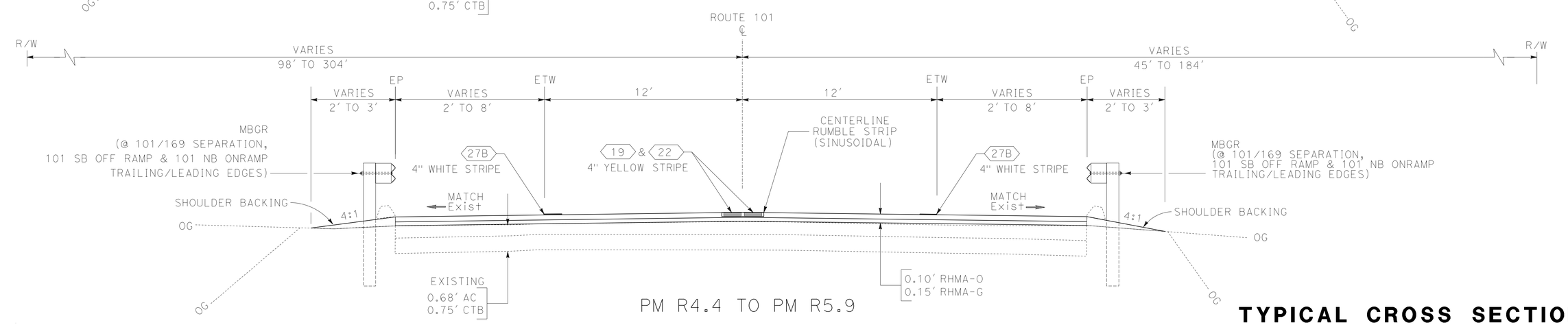

PM R4.4 TO PM R5.9

TYPICAL CROSS SECTIONS X-1

NO SCALE

REVISED BY | DATE REVISED
BIJAN SAMRAD | TOM PHILLIPS
CALCULATED-DESIGNED BY | CHECKED BY
FUNCTIONAL SUPERVISOR | L.R. ASHLEY

STATE OF CALIFORNIA - DEPARTMENT OF TRANSPORTATION
Caltrans®
DESIGN

P:\PROJ\01\0B080\drafting\01_00020445\01000204450a001.dgn

LAST REVISION 05-12-14 | DATE PLOTTED => 02-JUN-2014 | TIME PLOTTED => 10:35

Dist	COUNTY	ROUTE	POST MILES TOTAL PROJECT	SHEET No.	TOTAL SHEETS
01	DN	101	R4.4/9.4	3	47

REGISTERED CIVIL ENGINEER 5-12-14 DATE

May 12, 2014
PLANS APPROVAL DATE

REGISTERED PROFESSIONAL ENGINEER Thomas Jon Phillips No. 64633 Exp. 6/30/15 CIVIL STATE OF CALIFORNIA

THE STATE OF CALIFORNIA OR ITS OFFICERS OR AGENTS SHALL NOT BE RESPONSIBLE FOR THE ACCURACY OR COMPLETENESS OF SCANNED COPIES OF THIS PLAN SHEET.

NOTE:

1. EXISTING UTILITIES HAVE NOT BEEN PLOTTED ON THESE PLANS.

LEGEND:

RHMA-O = RUBBERIZED HOT MIX ASPHALT USING WARM MIXED ASPHALT TECHNOLOGY (OPEN GRADED)

RHMA-G = RUBBERIZED HOT MIX ASPHALT USING WARM MIXED ASPHALT TECHNOLOGY (GAP GRADED)

LIMITS OF COLD PLANE AC PAVEMENT PRIOR TO RHMA-G & RHMA-O OVERLAY

LIMITS OF SURFACING

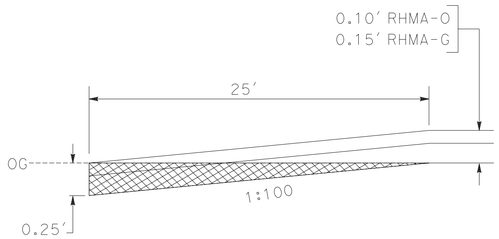

COLD PLANE AC PAVEMENT AT PUBLIC ROAD CONNECTIONS

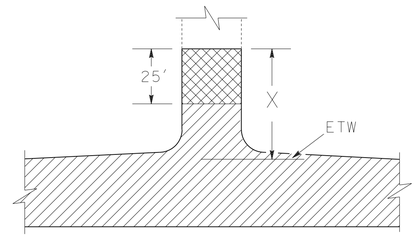

PUBLIC ROAD CONNECTION

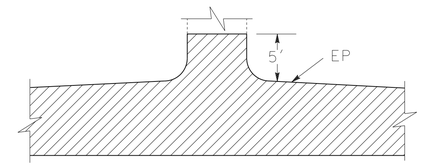

PRIVATE ROAD CONNECTION

PM	LOCATION	X FT
R5.32 Rt	EHLERS WAY Rd	40
7.60 Lt	McMILLAN Rd	50
8.17 Lt	MINOT CREEK Rd	70
8.17 Rt	MINOT CREEK Rd	80
8.30 Rt	PEINE STREET	40
8.62 Rt	OLD HUNTER CREEK Rd	70
8.90 Rt	NEW HUNTER CREEK Rd	50
9.25 Rt	HIGH PRAIRIE TRAILER PARK	80

LIMITS OF SURFACING FOR PUBLIC ROAD CONNECTIONS

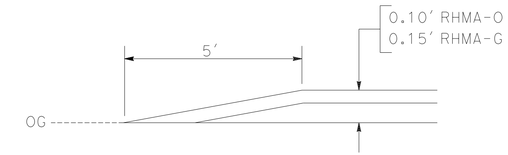

HMA CONFORM AT PRIVATE ROAD CONNECTIONS

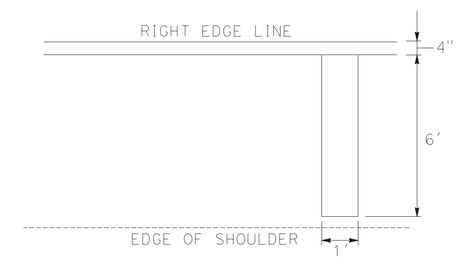

(AEM)
AERIAL ENFORCEMENT MARKINGS
PM R4.5 & 5.0

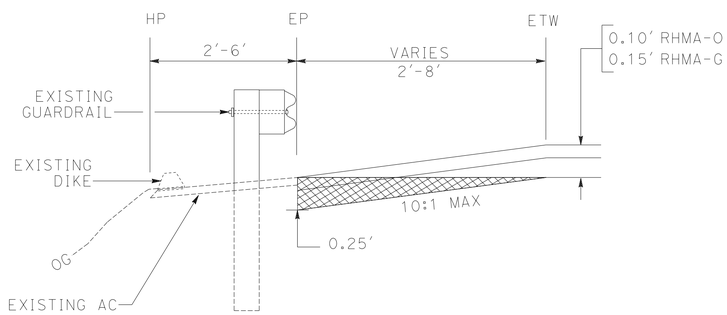

COLD PLANE AC PAVEMENT (SHOULDER)
PM R4.43 to PM R4.47 (NB, OFFRAMP, Rt)
PM R4.43 to PM R4.47 (SB, ONRAMP, Rt)

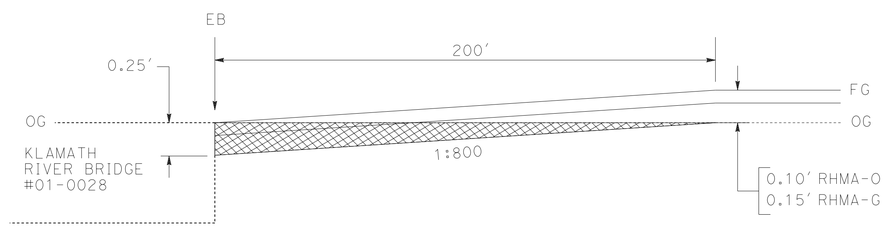

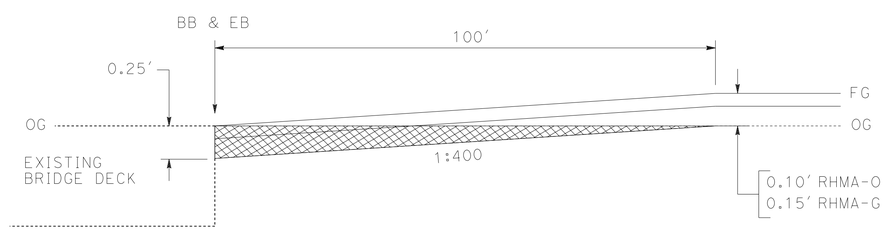

COLD PLANE AC PAVEMENT AT CONFORM, BB & EB

POST MILE	TAPER LENGTH (FT) BRIDGE LOCATIONS									
	KLAMATH RIVER	101/169 SEPARATION		MINOT CREEK		PANTHER CREEK		HUNTER CREEK		HIGH PRAIRIE CREEK
	EB	BB	EB	BB	EB	BB	EB	BB	EB	BB
R4.42	200									
R4.64		100								
R4.67			100							
8.14				100						
8.15					100					
8.34						100				
8.37							100			
8.51								100		
8.53									100	
9.39										100

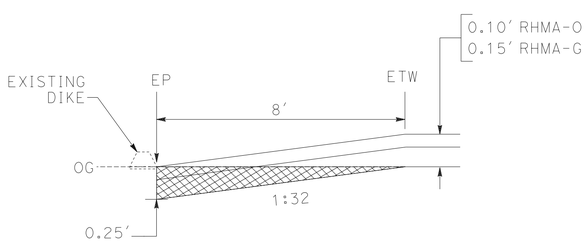

COLD PLANE AC PAVEMENT (SHOULDER)
PM R4.55 Lt to PM R4.64 (SB, MAINLINE, Rt)

NO SCALE

CONSTRUCTION DETAILS
C-1

REVISED BY | DATE REVISED
BIJAN SAMRAD | TOM PHILLIPS
CALCULATED-DESIGNED BY | CHECKED BY
FUNCTIONAL SUPERVISOR: L.R. ASHLEY

STATE OF CALIFORNIA - DEPARTMENT OF TRANSPORTATION
Caltrans
DESIGN

P:\PROJ\01\0B080\drafting\01_00020445\010002044 5ga001.dgn

LAST REVISION 05-12-14 | DATE PLOTTED => 02-JUN-2014 | TIME PLOTTED => 09:17

Dist	COUNTY	ROUTE	POST MILES TOTAL PROJECT	SHEET No.	TOTAL SHEETS
01	DN	101	R4.4/9.4	4	47

REGISTERED CIVIL ENGINEER 5-12-14 DATE

May 12, 2014
PLANS APPROVAL DATE

REGISTERED PROFESSIONAL ENGINEER Thomas Jon Phillips No. 64633 Exp. 6/30/15 CIVIL STATE OF CALIFORNIA

THE STATE OF CALIFORNIA OR ITS OFFICERS OR AGENTS SHALL NOT BE RESPONSIBLE FOR THE ACCURACY OR COMPLETENESS OF SCANNED COPIES OF THIS PLAN SHEET.

NOTE:

1. EXISTING UTILITIES HAVE NOT BEEN PLOTTED ON THESE PLANS.

LEGEND:

⇨ DIRECTION OF TRAVEL

CENTERLINE RUMBLE STRIP (SINUSOIDAL)

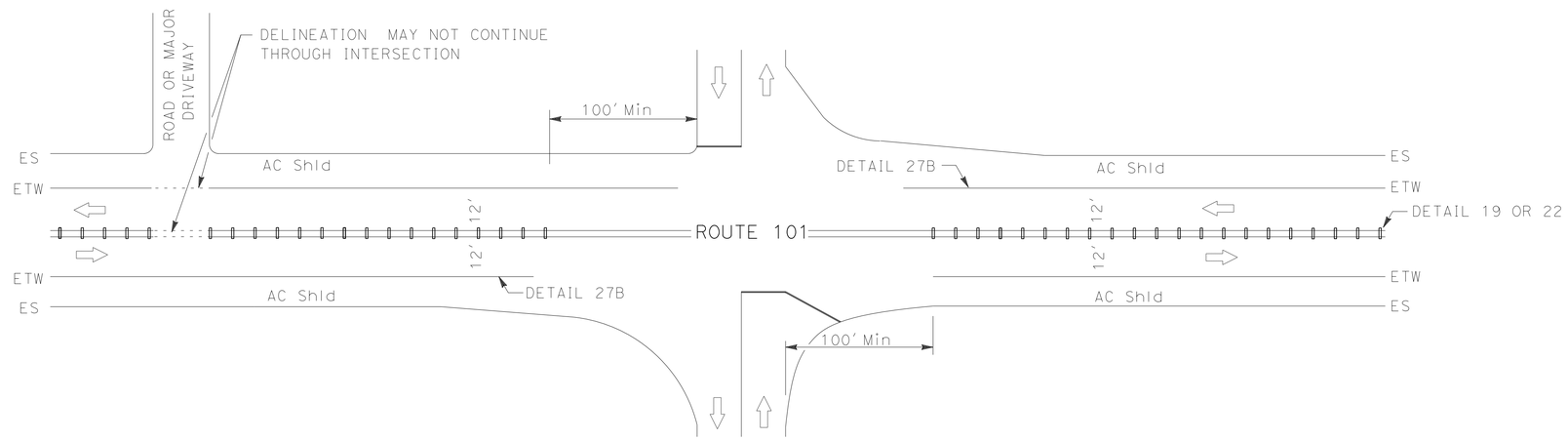

CENTERLINE RUMBLE STRIP (SINUSOIDAL) AT INTERSECTING ROADS AND DRIVEWAYS

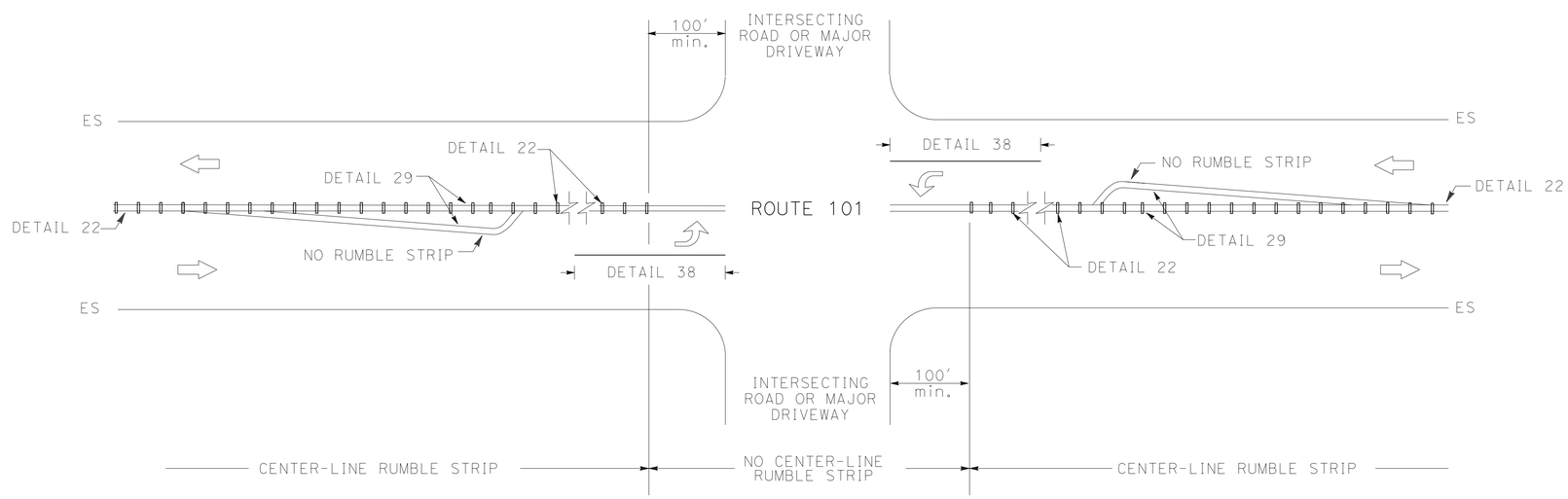

CENTERLINE RUMBLE STRIP (SINUSOIDAL) AT LEFT TURN POCKET

CONSTRUCTION DETAILS
C-2

NO SCALE

REVISED BY	DATE REVISED
BIJAN SAMRAD	TOM PHILLIPS

CALCULATED-DESIGNED BY | CHECKED BY

FUNCTIONAL SUPERVISOR: L.R. ASHLEY

STATE OF CALIFORNIA - DEPARTMENT OF TRANSPORTATION

Caltrans® DESIGN

P:\PROJ\01\0B080\drafting\01_00020445\0100020445ga002.dgn

LAST REVISION 05-12-14 | DATE PLOTTED => 02-JUN-2014 TIME PLOTTED => 09:17

Dist	COUNTY	ROUTE	POST MILES TOTAL PROJECT	SHEET No.	TOTAL SHEETS
01	DN	101	R4.4/9.4	5	47

REGISTERED CIVIL ENGINEER 5-12-14 DATE

May 12, 2014
PLANS APPROVAL DATE

REGISTERED PROFESSIONAL ENGINEER Thomas Jon Phillips No. 64633 Exp. 6/30/15 CIVIL STATE OF CALIFORNIA

THE STATE OF CALIFORNIA OR ITS OFFICERS OR AGENTS SHALL NOT BE RESPONSIBLE FOR THE ACCURACY OR COMPLETENESS OF SCANNED COPIES OF THIS PLAN SHEET.

NOTES:

1. FOR REMOVAL AND CONSTRUCTION LIMIT QUANTITIES SEE SHEET Q1.
2. FOR TRANSITION ANCHOR BLOCKS SEE STRUCTURES PLAN SHEETS 1-5.
3. EXISTING UTILITIES HAVE NOT BEEN PLOTTED ON THESE PLANS.

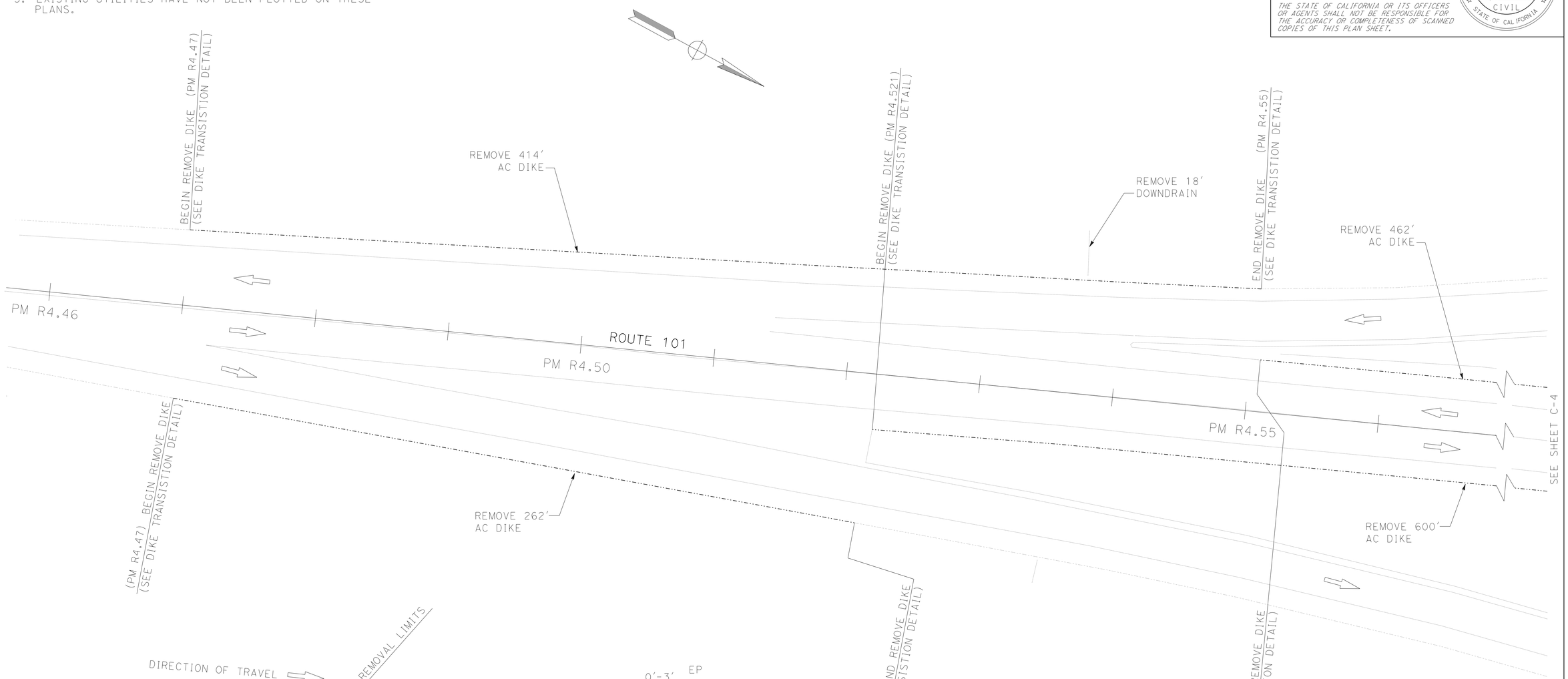

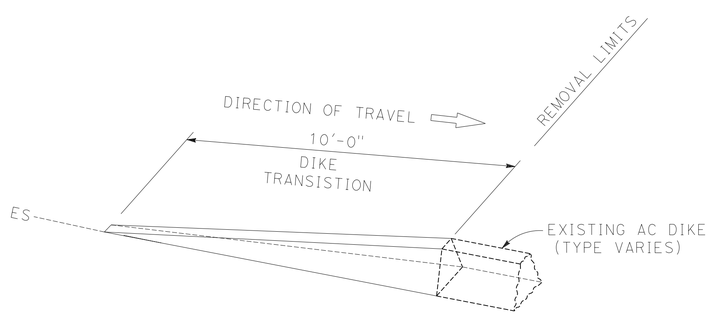

HMA DIKE TRANSISTION DETAIL

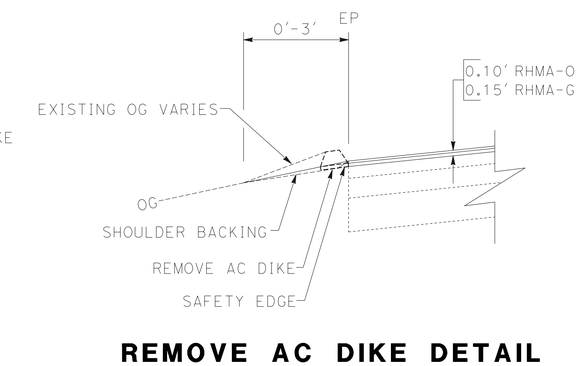

REMOVE AC DIKE DETAIL

(SEE SHEET Q-1 FOR QUANTITIES AND LIMITS OF AC DIKE REMOVAL)

NO SCALE

CONSTRUCTION DETAILS
C-3

REVISED BY	DATE REVISED
BIJAN SAMRAD	TOM PHILLIPS
CALCULATED-DESIGNED BY	CHECKED BY
FUNCTIONAL SUPERVISOR	L.R. ASHLEY

STATE OF CALIFORNIA - DEPARTMENT OF TRANSPORTATION
Caltrans® DESIGN

P:\PROJ\01\0B080\drafting\01_00020445\0100020445ga003.dgn

LAST REVISION 05-12-14
DATE PLOTTED => 02-JUN-2014
TIME PLOTTED => 10:35

Dist	COUNTY	ROUTE	POST MILES TOTAL PROJECT	SHEET No.	TOTAL SHEETS
01	DN	101	R4.4/9.4	6	47

REGISTERED CIVIL ENGINEER 5-12-14 DATE

May 12, 2014
PLANS APPROVAL DATE

REGISTERED PROFESSIONAL ENGINEER Thomas Jon Phillips No. 64633 Exp. 6/30/15 CIVIL STATE OF CALIFORNIA

THE STATE OF CALIFORNIA OR ITS OFFICERS OR AGENTS SHALL NOT BE RESPONSIBLE FOR THE ACCURACY OR COMPLETENESS OF SCANNED COPIES OF THIS PLAN SHEET.

NOTES:

1. FOR REMOVAL AND CONSTRUCTION LIMIT QUANTITIES SEE SHEET Q1.
2. FOR TRANSITION ANCHOR BLOCKS SEE STRUCTURES PLAN SHEETS 1-5.
3. EXISTING UTILITIES HAVE NOT BEEN PLOTTED ON THESE PLANS.

LEGEND:

REMOVE BASE AND SURFACING

ROLLED EROSION CONTROL PRODUCT (BLANKET)

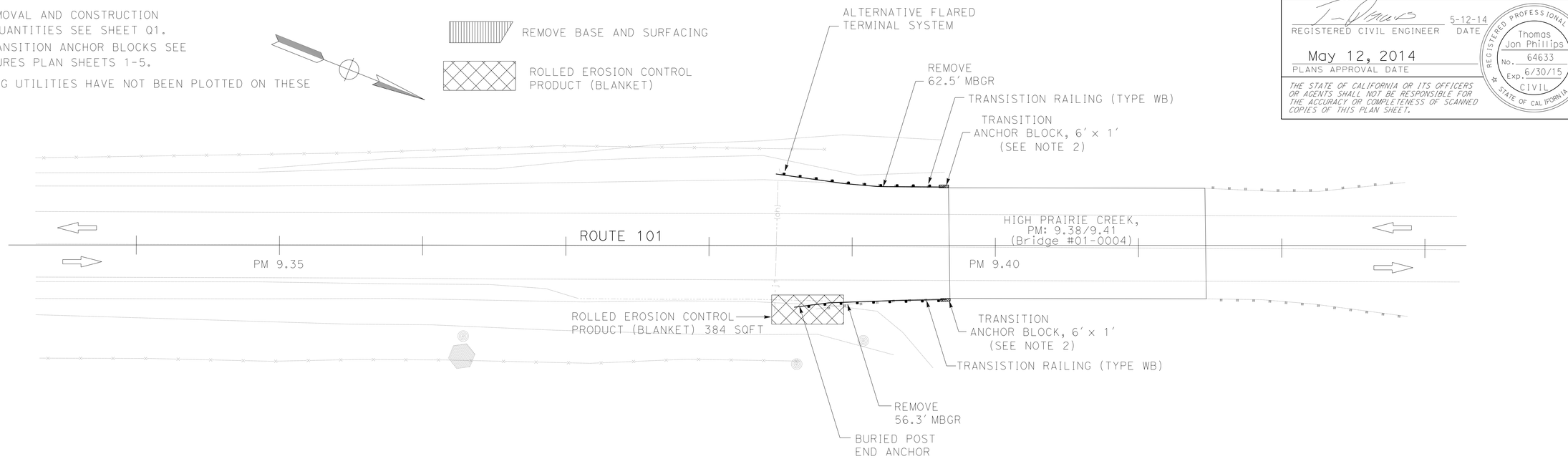

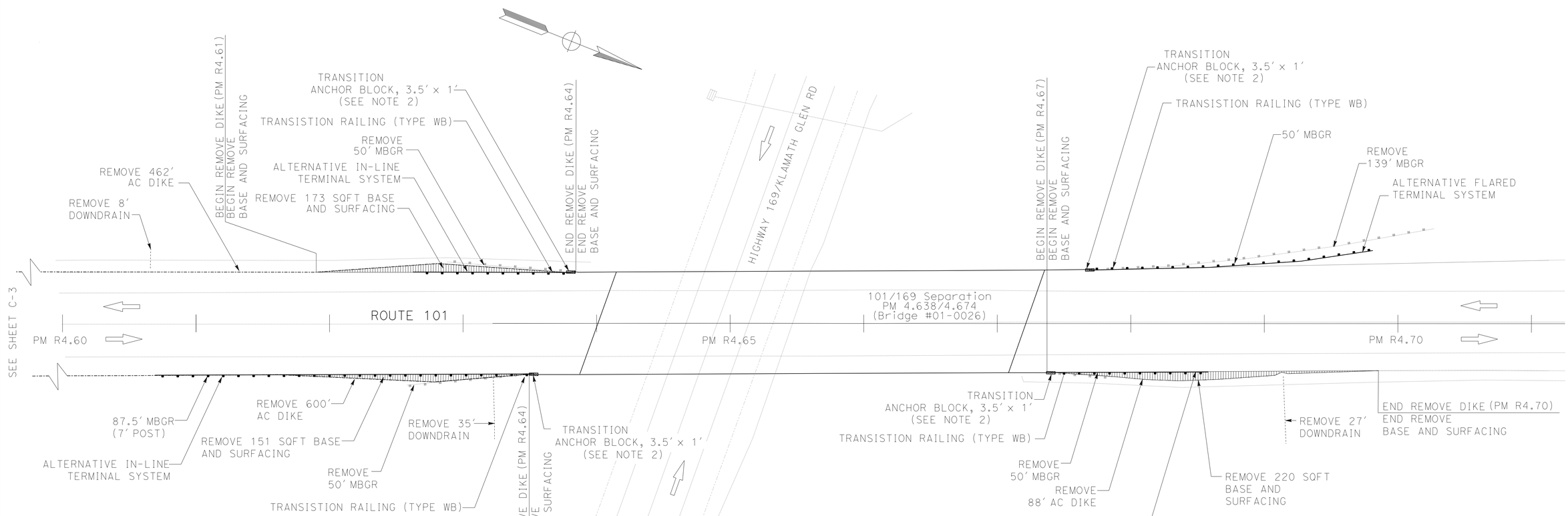

CONSTRUCTION DETAILS C-4

NO SCALE

REVISED BY	DATE REVISED
BIJAN SAMRAD	TOM PHILLIPS
CALCULATED-DESIGNED BY	CHECKED BY
FUNCTIONAL SUPERVISOR	L.R. ASHLEY

STATE OF CALIFORNIA - DEPARTMENT OF TRANSPORTATION

Caltrans® DESIGN

P:\PROJ\01\0B080\drafting\01_00020445\0100020445ga004.dgn

LAST REVISION 05-12-14 | DATE PLOTTED => 02-JUN-2014 | TIME PLOTTED => 09:17

Dist	COUNTY	ROUTE	POST MILES TOTAL PROJECT	SHEET No.	TOTAL SHEETS
01	DN	101	R4.4/9.4	7	47

REGISTERED CIVIL ENGINEER 5-12-14 DATE

May 12, 2014
PLANS APPROVAL DATE

REGISTERED PROFESSIONAL ENGINEER Thomas Jon Phillips No. 64633 Exp. 6/30/15 CIVIL STATE OF CALIFORNIA

THE STATE OF CALIFORNIA OR ITS OFFICERS OR AGENTS SHALL NOT BE RESPONSIBLE FOR THE ACCURACY OR COMPLETENESS OF SCANNED COPIES OF THIS PLAN SHEET.

NOTES:

1. FOR REMOVAL AND CONSTRUCTION LIMIT QUANTITIES SEE SHEET Q1.
2. FOR TRANSITION ANCHOR BLOCKS SEE STRUCTURES PLAN SHEETS 1-5.
3. EXISTING UTILITIES HAVE NOT BEEN PLOTTED ON THESE PLANS.

LEGEND:

REMOVE BASE AND SURFACING

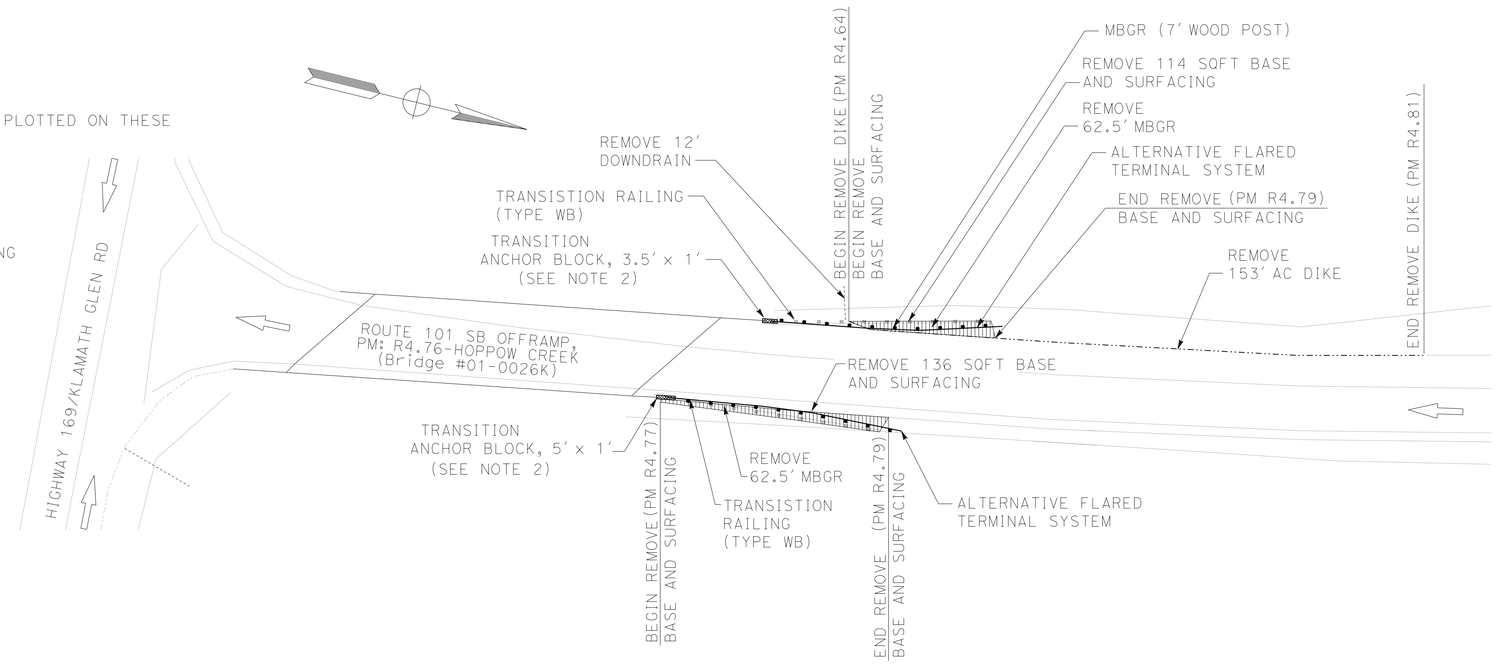

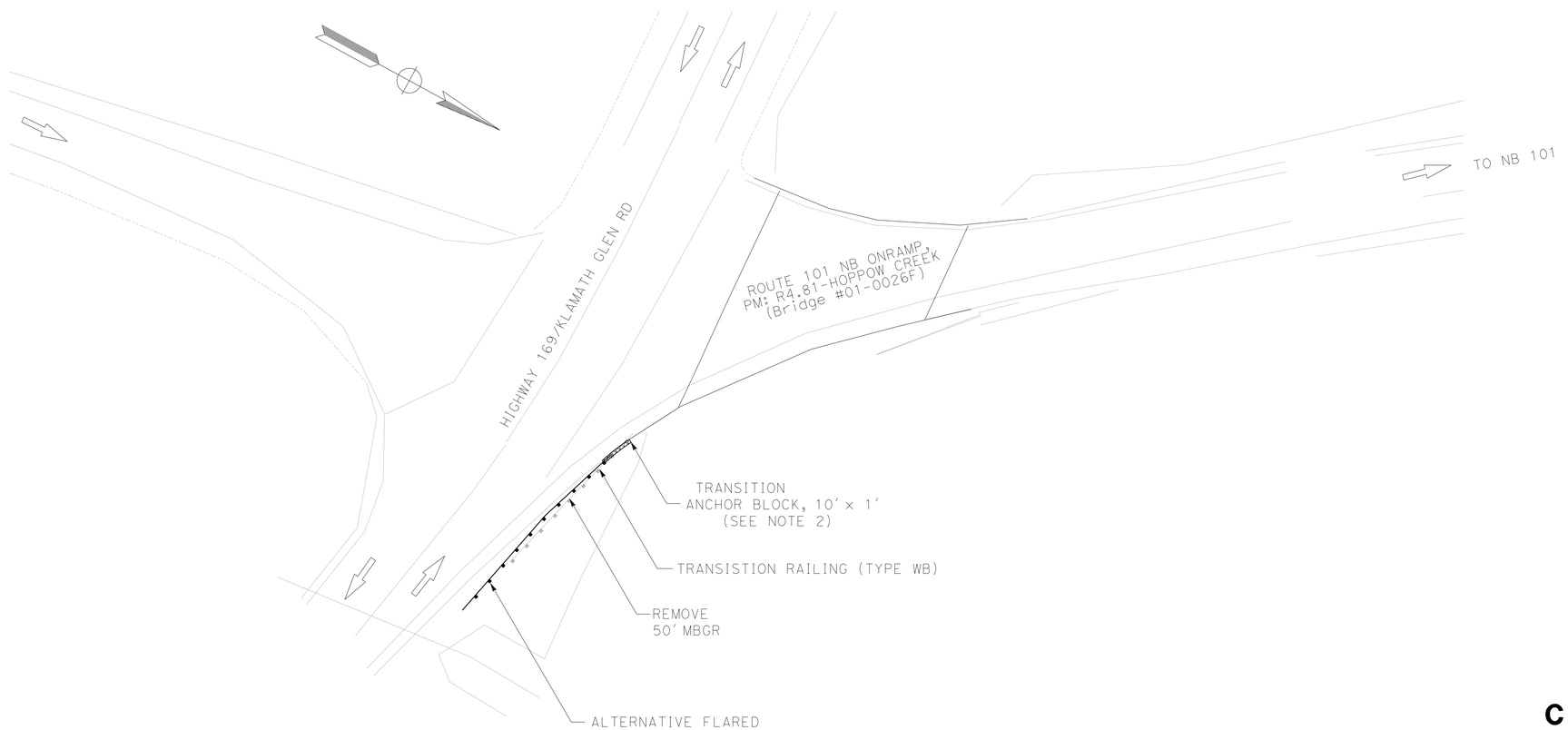

CONSTRUCTION DETAILS C-5

NO SCALE

REVISED BY | DATE REVISED
BIJAN SAMRAD | TOM PHILLIPS
CALCULATED-DESIGNED BY | CHECKED BY
FUNCTIONAL SUPERVISOR: L.R. ASHLEY

STATE OF CALIFORNIA - DEPARTMENT OF TRANSPORTATION
Caltrans® DESIGN

P:\PROJ\01\0B080\draffing\01_00020445\0100020445ga005.dgn

LAST REVISION 05-12-14 | DATE PLOTTED => 02-JUN-2014 | TIME PLOTTED => 09:17

BORDER LAST REVISED 7/2/2010 | USERNAME => s132662 | DGN FILE => 0100020445ga005.dgn | RELATIVE BORDER SCALE IS IN INCHES 0 1 2 3 | UNIT 0313 | PROJECT NUMBER & PHASE 01000204451

Dist	COUNTY	ROUTE	POST MILES TOTAL PROJECT	SHEET No.	TOTAL SHEETS
01	DN	101	R4.4/9.4	8	47

REGISTERED CIVIL ENGINEER 5-12-14 DATE

May 12, 2014
PLANS APPROVAL DATE

REGISTERED PROFESSIONAL ENGINEER Thomas Jon Phillips No. 64633 Exp. 6/30/15 CIVIL STATE OF CALIFORNIA

THE STATE OF CALIFORNIA OR ITS OFFICERS OR AGENTS SHALL NOT BE RESPONSIBLE FOR THE ACCURACY OR COMPLETENESS OF SCANNED COPIES OF THIS PLAN SHEET.

NOTE:

1. FOR DETAILS NOT SHOWN SEE STANDARD PLAN A20A

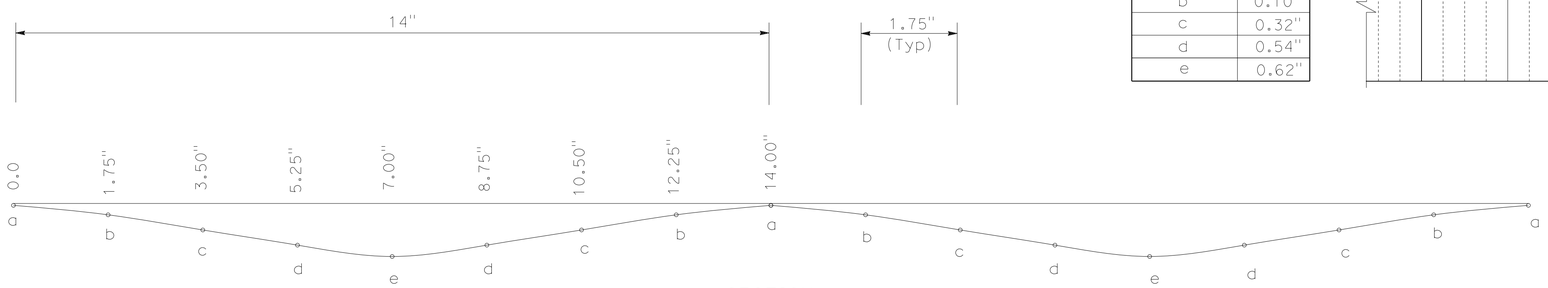

SECTION

LOCATION	DEPTH
a	0.00"
b	0.10"
c	0.32"
d	0.54"
e	0.62"

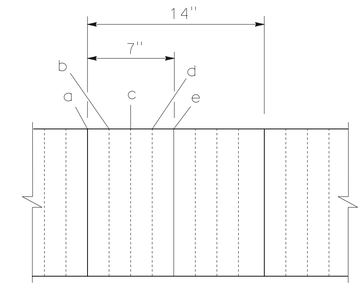

CENTERLINE RUMBLE STRIP (SINUSOIDAL)

FOR LIMITS SEE SHEET PDQ-6

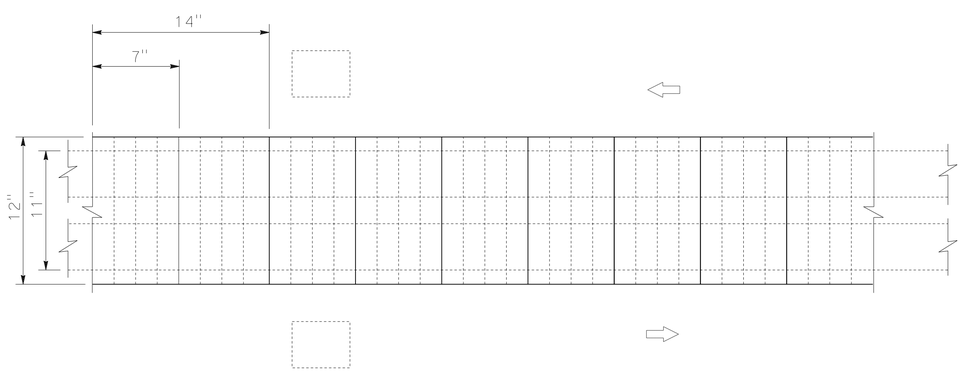

PLAN VIEW
WITH DETAIL 22
CENTERLINE RUMBLE STRIP (SINUSOIDAL)

FOR LIMITS SEE SHEET PDQ-6

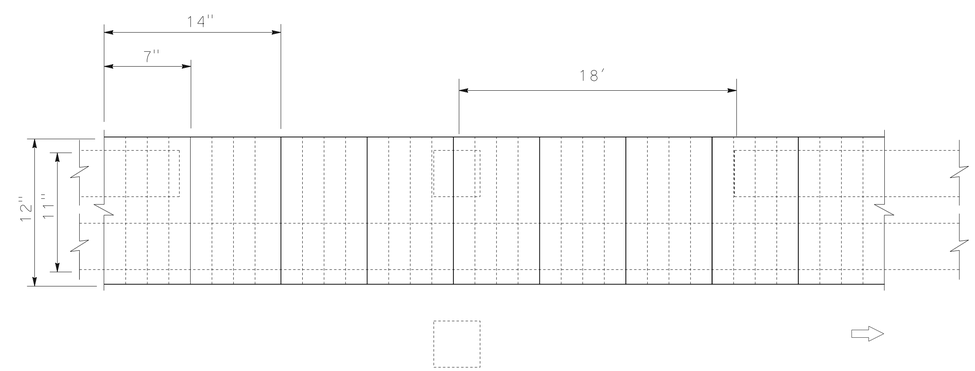

PLAN VIEW
WITH DETAIL 19
CENTERLINE RUMBLE STRIP (SINUSOIDAL)

FOR LIMITS SEE SHEET PDQ-6

CONSTRUCTION DETAILS
C-6

NO SCALE

REVISED BY | DATE REVISED
BIJAN SAMRAD | TOM PHILLIPS
CALCULATED-DESIGNED BY | CHECKED BY
FUNCTIONAL SUPERVISOR
L.R. ASHLEY

STATE OF CALIFORNIA - DEPARTMENT OF TRANSPORTATION
Caltrans
DESIGN

P:\PROJ\01\0B080\drafting\01_00020445\01000204450a006.dgn

LAST REVISION 05-12-14 | DATE PLOTTED => 02-JUN-2014 | TIME PLOTTED => 09:17

Dist	COUNTY	ROUTE	POST MILES TOTAL PROJECT	SHEET No.	TOTAL SHEETS
01	DN	101	R4.4/9.4	9	47

REGISTERED CIVIL ENGINEER 5-12-14 DATE

May 12, 2014
PLANS APPROVAL DATE

REGISTERED PROFESSIONAL ENGINEER Thomas Jon Phillips No. 64633 Exp. 6/30/15 CIVIL STATE OF CALIFORNIA

THE STATE OF CALIFORNIA OR ITS OFFICERS OR AGENTS SHALL NOT BE RESPONSIBLE FOR THE ACCURACY OR COMPLETENESS OF SCANNED COPIES OF THIS PLAN SHEET.

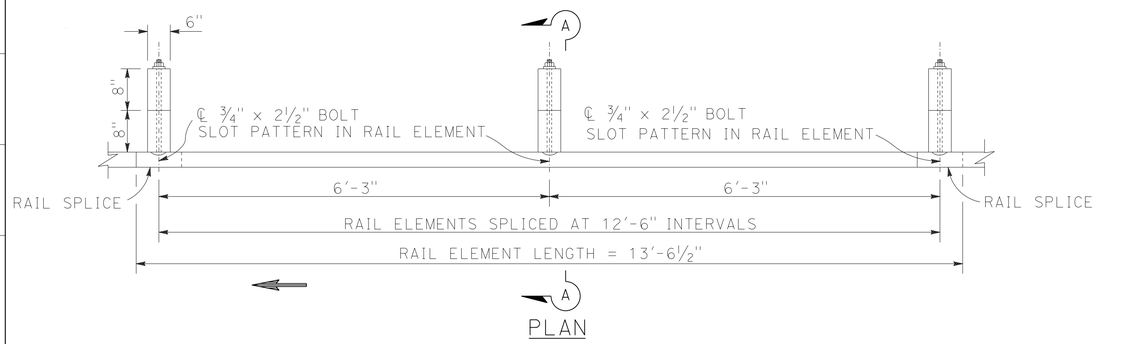

PLAN

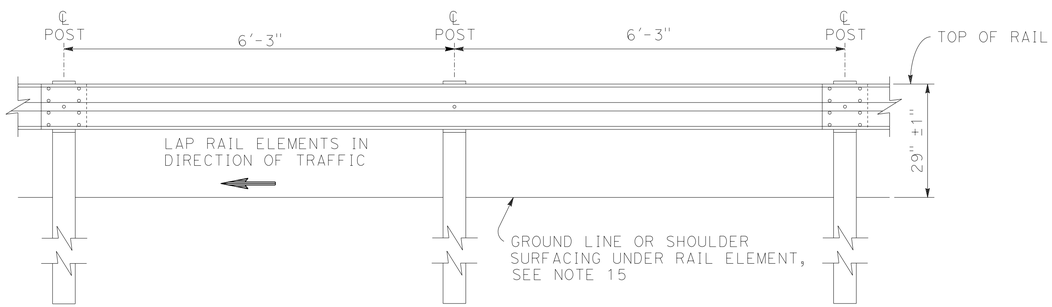

ELEVATION

METAL BEAM GUARD RAILING WITH WOOD POST AND BLOCKS

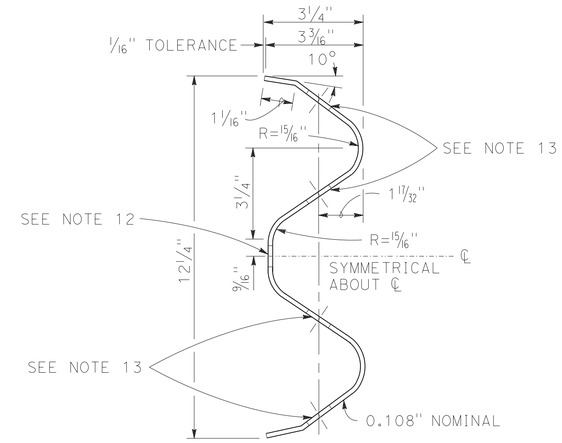

SECTION THRU
RAIL ELEMENT

NOTES:

1. For details of standard hardware used to construct guard railing, see sheet C-8.
2. For details of wood posts and wood blocks used to construct guard railing, see sheet C-9.
3. For additional installation details, see sheet C-10.
4. Guard railing post spacing to be 6'-3" center to center, except as otherwise noted.
5. For guard railing typical layouts, see sheets C-12, C-13 & C-14.
6. To connect railing to terminal system end treatment, transition the top of railing height at a ratio of 120:1 to terminal system end treatment height plus one 12'-6" standard railing section at the transitioned height for a horizontal connection to the end treatment.
7. For details of guard railing transition to bridge railing, see sheet C-19.
8. For additional details of guard railing connection to bridge railings, see sheets C-16 & C-17.
9. For guard railing connection details to abutments and walls, see sheet C-18.
10. Direction of adjacent traffic indicated by →.
11. For typical guard railing delineation and dike positioning details, see sheet C-11.
12. Slotted hole for bolted connection of rail element to block and post. See "Section Thru Rail Element".
13. Slotted holes for splice bolts to overlap ends of rail element. See "Section Thru Rail Element".
14. Additional hole in uppermost portion of line post is for potential future adjustments of railing height. See sheet C-9.
15. Install posts in soil.

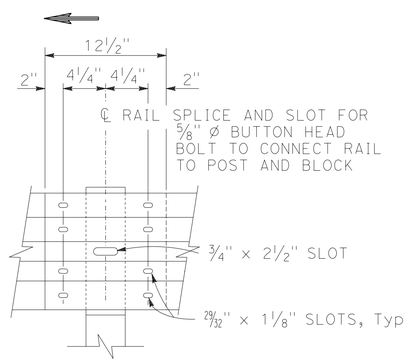

ELEVATION

RAIL ELEMENT SPLICE DETAIL

a) Connect the over lapped end of the rail elements with ⅝" Ø x 1⅜" button head oval shoulder splice bolts inserted into the 29/32" x 1⅛" slots and bolted together with ⅝" Ø recessed hex nuts. Recess of hex nut points toward rail element. A total of 8 bolts and nuts are to be used at each rail splice connection.

b) The ends of the rail elements are to be overlapped in the direction of traffic (see details).

c) Where end cap is to be attached to the end of a rail element, a total of 4 of the above described splice bolts and nuts are to be used.

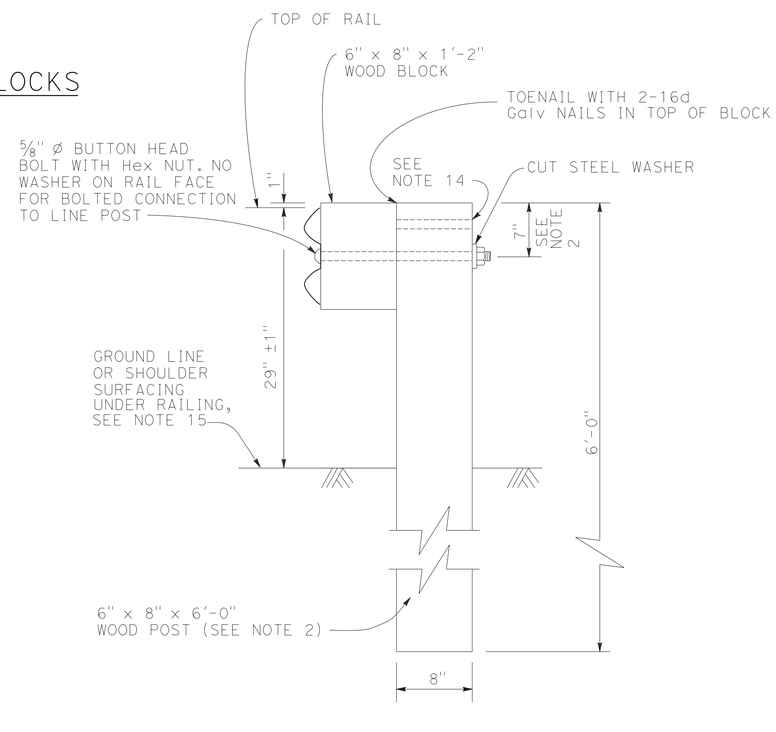

SECTION A-A

TYPICAL WOOD LINE
POST INSTALLATION

See Note 3

METAL BEAM GUARD RAILING STANDARD RAILING SECTION (WOOD POST WITH WOOD BLOCK)

CONSTRUCTION DETAILS C-7

NO SCALE

REVISED BY | DATE REVISED
BIJAN SAMRAD | TOM PHILLIPS
CALCULATED-DESIGNED BY | CHECKED BY
FUNCTIONAL SUPERVISOR | L.R. ASHLEY

STATE OF CALIFORNIA - DEPARTMENT OF TRANSPORTATION
Caltrans DESIGN

P:\PROJ\01\0B080\drafting\01_00020445\01000204445ga007.dgn

LAST REVISION 05-12-14 | DATE PLOTTED => 02-JUN-2014 | TIME PLOTTED => 09:17

BORDER LAST REVISED 7/2/2010 | USERNAME => s132662 | DGN FILE => 01000204445ga007.dgn | RELATIVE BORDER SCALE IS IN INCHES 0 1 2 3 | UNIT 0313 | PROJECT NUMBER & PHASE 01000204451

Dist	COUNTY	ROUTE	POST MILES TOTAL PROJECT	SHEET No.	TOTAL SHEETS
01	DN	101	R4.4/9.4	10	47

REGISTERED CIVIL ENGINEER 5-12-14 DATE

May 12, 2014
PLANS APPROVAL DATE

REGISTERED PROFESSIONAL ENGINEER Thomas Jon Phillips No. 64633 Exp. 6/30/15 CIVIL STATE OF CALIFORNIA

THE STATE OF CALIFORNIA OR ITS OFFICERS OR AGENTS SHALL NOT BE RESPONSIBLE FOR THE ACCURACY OR COMPLETENESS OF SCANNED COPIES OF THIS PLAN SHEET.

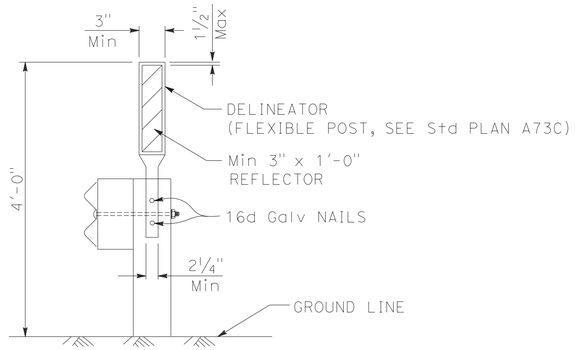

GUARD RAILING DELINEATION

See Note 1

NOTE:

1. Guard railing delineation to be used where shown on the Project Plans.

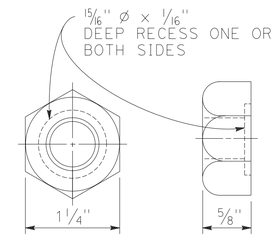

5/8" Ø RECESS NUT

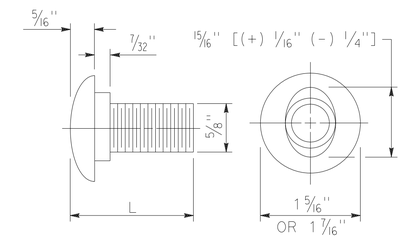

5/8" Ø BUTTON HEAD BOLT

L	THREAD LENGTH
1 3/8"	FULL THREAD LENGTH
2"	FULL THREAD LENGTH
10"	4" Min THREAD LENGTH
18"	4" Min THREAD LENGTH
20"	4" Min THREAD LENGTH
22"	4" Min THREAD LENGTH
** 2 3/4"	2" Min THREAD LENGTH
** 19"	4" Min THREAD LENGTH

** For nested rail applications.

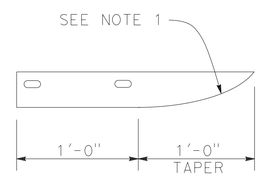

PLAN

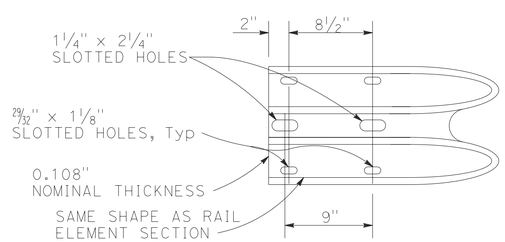

ELEVATION

END CAP

(TYPE A)

NOTE:

1. Slotted holes for splice bolts to overlap ends of rail element.

METAL BEAM GUARD RAILING STANDARD HARDWARE

CONSTRUCTION DETAILS

C-8

NO SCALE

STATE OF CALIFORNIA - DEPARTMENT OF TRANSPORTATION
Caltrans® DESIGN

FUNCTIONAL SUPERVISOR: L.R. ASHLEY
CALCULATED-DESIGNED BY: BIJAN SAMRAD
CHECKED BY: TOM PHILLIPS
REVISED BY
DATE REVISED

P:\PROJ\01\08080\drafting\01_00020445\0100020445ga008.dgn

LAST REVISION 05-12-14
DATE PLOTTED => 02-JUN-2014
TIME PLOTTED => 09:17

Dist	COUNTY	ROUTE	POST MILES TOTAL PROJECT	SHEET No.	TOTAL SHEETS
01	DN	101	R4.4/9.4	11	47

REGISTERED CIVIL ENGINEER 5-12-14 DATE

May 12, 2014
PLANS APPROVAL DATE

REGISTERED PROFESSIONAL ENGINEER Thomas Jon Phillips No. 64633 Exp. 6/30/15 CIVIL STATE OF CALIFORNIA

THE STATE OF CALIFORNIA OR ITS OFFICERS OR AGENTS SHALL NOT BE RESPONSIBLE FOR THE ACCURACY OR COMPLETENESS OF SCANNED COPIES OF THIS PLAN SHEET.

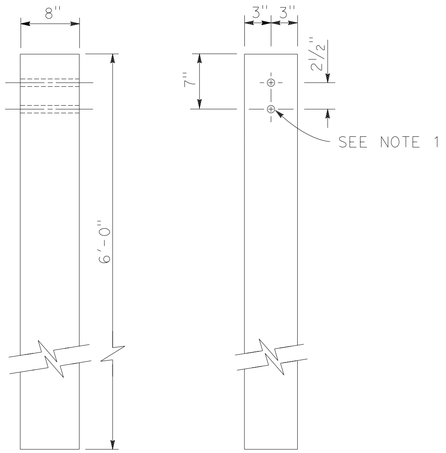

SIDE FRONT

6" x 8" WOOD POST

See Note 3

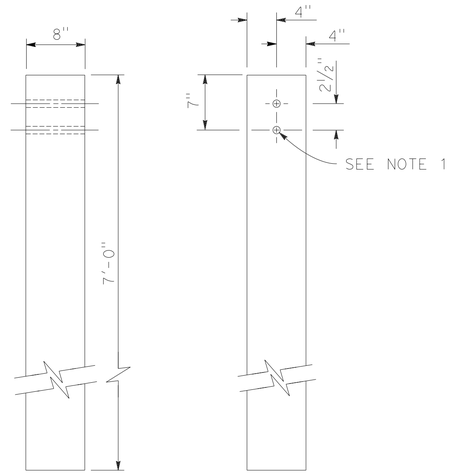

SIDE FRONT

8" x 8" WOOD POST

See Note 4

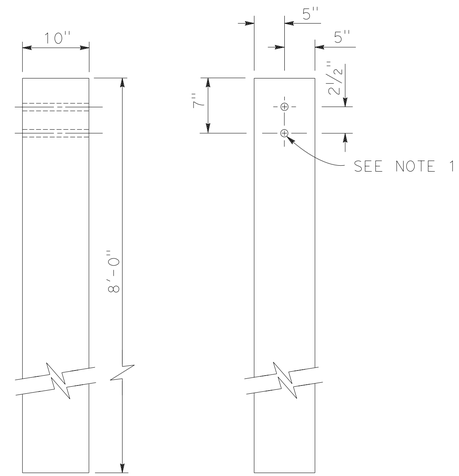

SIDE FRONT

10" x 10" WOOD POST

See Note 5

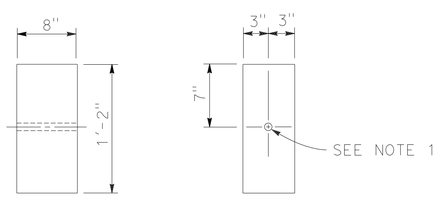

SIDE FRONT

6" x 8" WOOD BLOCK

See Note 3

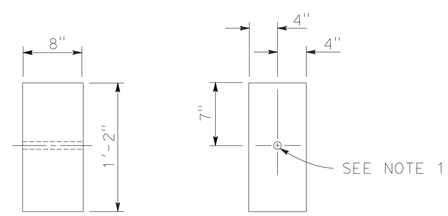

SIDE FRONT

8" x 8" WOOD BLOCK

NOTES:

1. All holes in wood posts and blocks shall be ¾" Dia ± 1/16".
2. Dimensions shown for wood post are nominal.
3. This post and block combination used for standard line post sections of guard railing.
4. This post and 8" x 8" block combination used for line post sections of guard railing on narrow roadways.
5. This post and 8" x 8" block combination is typically used where strengthened line post sections of guard railings are warranted to shield fixed objects.

METAL BEAM GUARD RAILING WOOD POST AND WOOD BLOCK DETAILS CONSTRUCTION DETAILS

C-9

NO SCALE

REVISED BY	DATE REVISED
BIJAN SAMRAD	TOM PHILLIPS
CALCULATED-DESIGNED BY	CHECKED BY
FUNCTIONAL SUPERVISOR	L.R. ASHLEY

STATE OF CALIFORNIA - DEPARTMENT OF TRANSPORTATION

Caltrans® DESIGN

P:\PROJ\01\0B080\drafting\01_00020445\0100020445ga009.dgn

LAST REVISION 05-12-14 | DATE PLOTTED => 02-JUN-2014 | TIME PLOTTED => 09:17

Dist	COUNTY	ROUTE	POST MILES TOTAL PROJECT	SHEET No.	TOTAL SHEETS
01	DN	101	R4.4/9.4	12	47

REGISTERED CIVIL ENGINEER 5-12-14 DATE

May 12, 2014
PLANS APPROVAL DATE

REGISTERED PROFESSIONAL ENGINEER Thomas Jon Phillips No. 64633 Exp. 6/30/15 CIVIL STATE OF CALIFORNIA

THE STATE OF CALIFORNIA OR ITS OFFICERS OR AGENTS SHALL NOT BE RESPONSIBLE FOR THE ACCURACY OR COMPLETENESS OF SCANNED COPIES OF THIS PLAN SHEET.

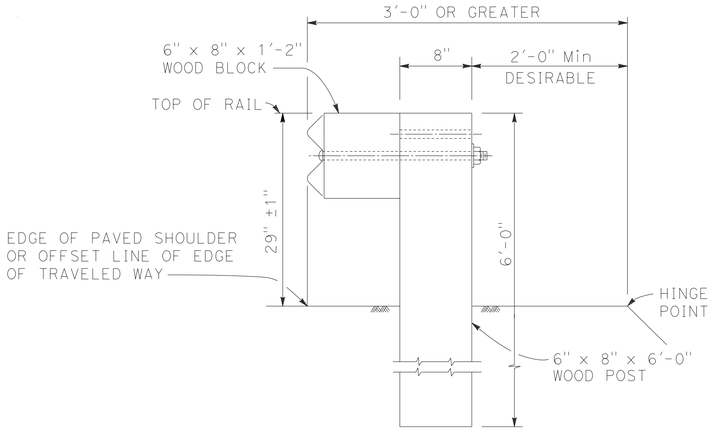

DETAIL A

TYPICAL ROADWAY INSTALLATION

See Note 1

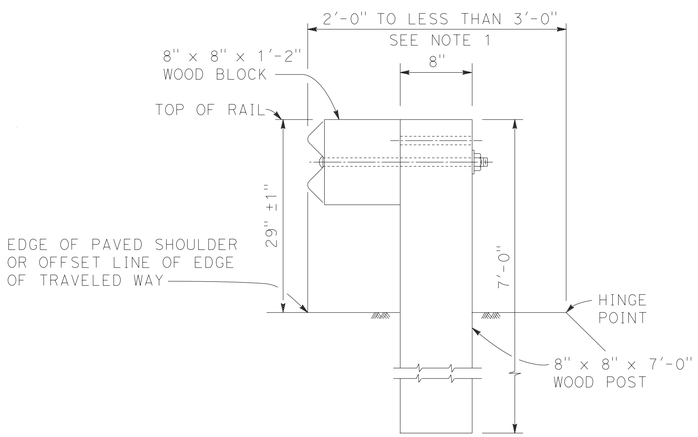

DETAIL B

NARROW ROADWAY INSTALLATION

See Note 1

POST EMBEDMENT

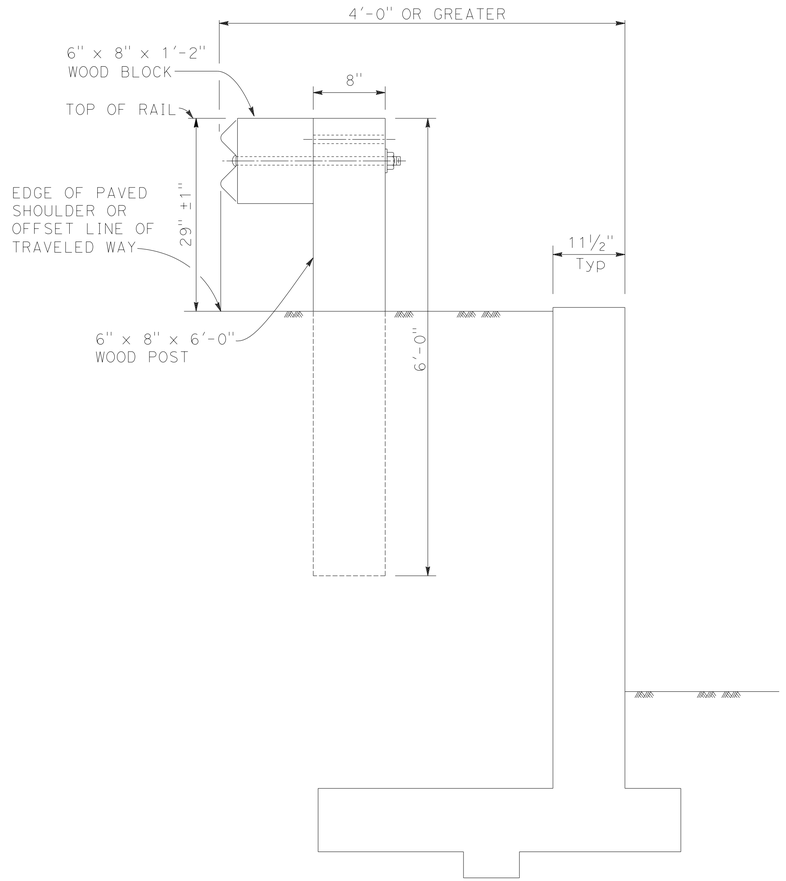

DETAIL C

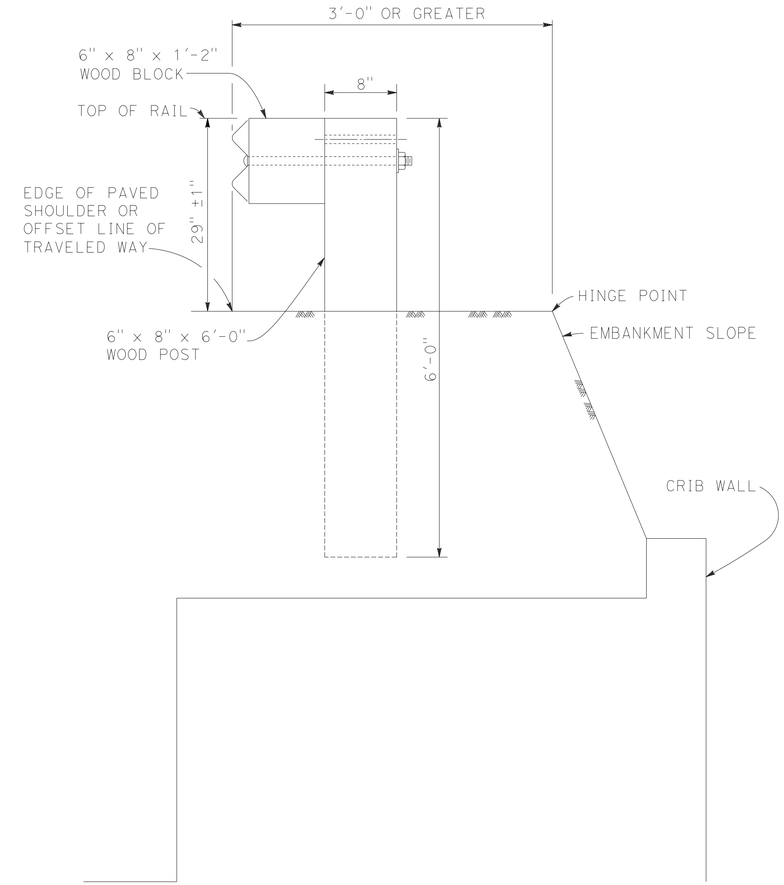

DETAIL D

INSTALLATION AT EARTH RETAINING WALLS

NOTE:

1. Where the distance between the face of the rail and the hinge point is less than 2'-0", see the Project Plans for special details.

METAL BEAM GUARD RAILING TYPICAL LINE POST EMBEDMENT AND HINGE POINT OFFSET DETAILS CONSTRUCTION DETAILS

C-10

NO SCALE

REVISED BY | DATE REVISED
BIJAN SAMRAD | TOM PHILLIPS
CALCULATED-DESIGNED BY | CHECKED BY
FUNCTIONAL SUPERVISOR | L.R. ASHLEY

STATE OF CALIFORNIA - DEPARTMENT OF TRANSPORTATION
Caltrans® DESIGN

P:\PROJ\01\QB080\drafting\01_00020445\0100020445ga010.dgn

LAST REVISION 05-12-14 | DATE PLOTTED => 02-JUN-2014 | TIME PLOTTED => 09:17

Dist	COUNTY	ROUTE	POST MILES TOTAL PROJECT	SHEET No.	TOTAL SHEETS
01	DN	101	R4.4/9.4	13	47

REGISTERED CIVIL ENGINEER 5-12-14 DATE

May 12, 2014
PLANS APPROVAL DATE

REGISTERED PROFESSIONAL ENGINEER Thomas Jon Phillips No. 64633 Exp. 6/30/15 CIVIL STATE OF CALIFORNIA

THE STATE OF CALIFORNIA OR ITS OFFICERS OR AGENTS SHALL NOT BE RESPONSIBLE FOR THE ACCURACY OR COMPLETENESS OF SCANNED COPIES OF THIS PLAN SHEET.

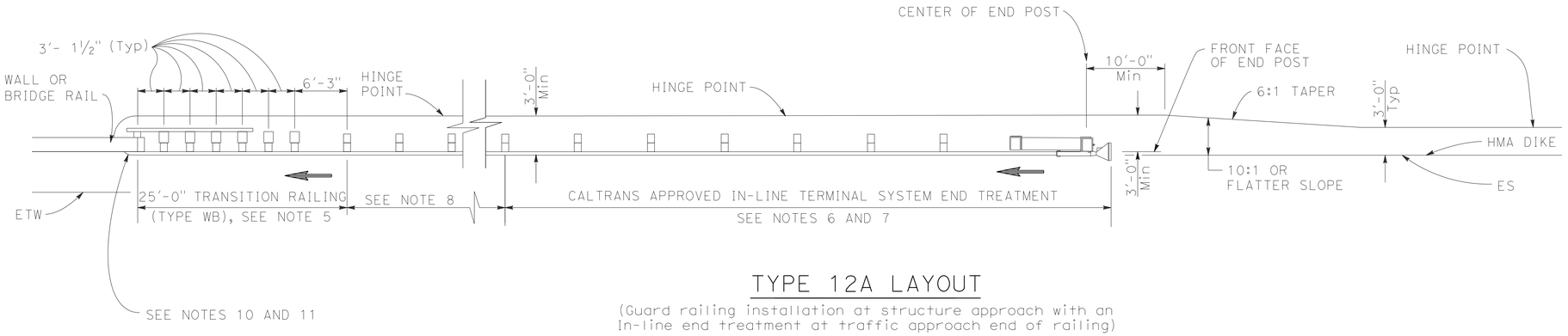

TYPE 12A LAYOUT

(Guard railing installation at structure approach with an In-line end treatment at traffic approach end of railing)
See Note 9

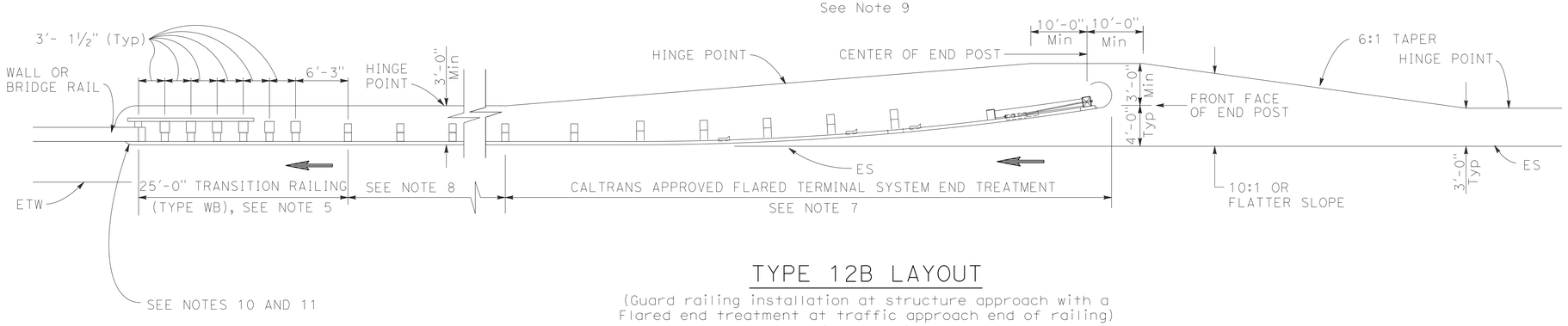

TYPE 12B LAYOUT

(Guard railing installation at structure approach with a Flared end treatment at traffic approach end of railing)
See Note 9

NOTES:

1. Line post, blocks and hardware to be used are shown on sheets C-7, C-8 & C-9.
2. Guard rail post spacing to be 6'-3" center to center, except as otherwise noted.
3. Except as noted, line posts are 6" x 8" x 6'-0" wood with 6" x 8" x 1'-2" wood blocks.
4. Direction of adjacent traffic indicated by ⟶.
5. For Transition Railing (Type WB) details for Types 12A and 12B Layouts, see sheet C-18.
6. In-line Terminal System End Treatments are used where site conditions will not accommodate a flared end treatment.
7. The type of terminal system end treatment to be used will be shown on the Project Plans.
8. Dependent on site conditions (embankment height, side slopes, or other fixed objects), it may be advisable to construct additional guard railing (a length equal to multiples of 12'-6" with 6'-3" post spacing) between the transition railing and end treatment.
9. Type 12A or Type 12B Layouts are typically used:
   a. To the right of approaching traffic, at the end of a structure, on two-lane conventional highway where the roadbed width across the structure is less than 40 feet.
   b. To the left of approaching traffic, at the end of a structure, on two-lane conventional highway where the roadbed width across the structure is less than 40 feet.
   c. To the right of approaching traffic at the end of each structure on multilane freeways or expressways with separate adjacent or parallel bridges.
   d. To the right of approaching traffic at the end of the structure on multilane freeways or expressways with decked median on the bridge.
10. For additional details of typical connections to bridge rail, see sheets C-16 & C-17.
11. For additional details of a typical connection to walls or abutments, see sheet C-17.

METAL BEAM GUARD RAILING TYPICAL LAYOUTS FOR STRUCTURE APPROACH

CONSTRUCTION DETAILS C-11

NO SCALE

REVISED BY | DATE REVISED
BIJAN SAMRAD | TOM PHILLIPS
CALCULATED-DESIGNED BY | CHECKED BY
FUNCTIONAL SUPERVISOR: L.R. ASHLEY

STATE OF CALIFORNIA - DEPARTMENT OF TRANSPORTATION
Caltrans® DESIGN

P:\PROJ\01\QB080\drafting\01_00020445\0100020445ga011.dgn

LAST REVISION 05-12-14 | DATE PLOTTED => 02-JUN-2014 | TIME PLOTTED => 09:17

BORDER LAST REVISED 7/2/2010 | USERNAME => s132662 | DGN FILE => 0100020445ga011.dgn | RELATIVE BORDER SCALE IS IN INCHES 0 1 2 3 | UNIT 0313 | PROJECT NUMBER & PHASE 01000204451

Dist	COUNTY	ROUTE	POST MILES TOTAL PROJECT	SHEET No.	TOTAL SHEETS
01	DN	101	R4.4/9.4	14	47

REGISTERED CIVIL ENGINEER 5-12-14 DATE

May 12, 2014
PLANS APPROVAL DATE

REGISTERED PROFESSIONAL ENGINEER Thomas Jon Phillips No. 64633 Exp. 6/30/15 CIVIL STATE OF CALIFORNIA

THE STATE OF CALIFORNIA OR ITS OFFICERS OR AGENTS SHALL NOT BE RESPONSIBLE FOR THE ACCURACY OR COMPLETENESS OF SCANNED COPIES OF THIS PLAN SHEET.

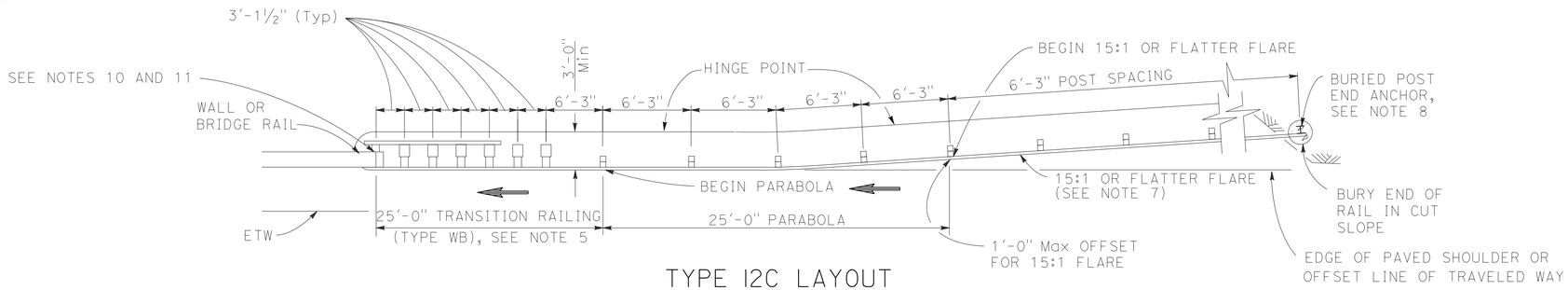

TYPE 12C LAYOUT

(Guard railing installation at structure approach with a Buried end anchor treatment at traffic approach end of railing)
See Note 9

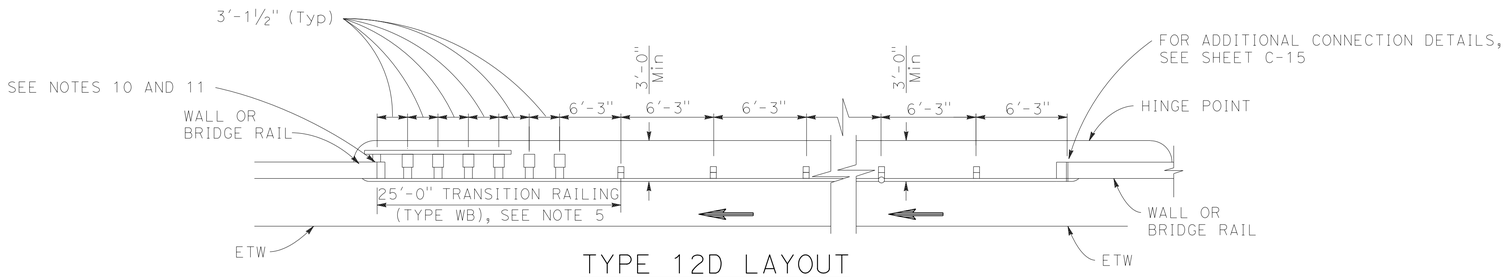

TYPE 12D LAYOUT

(Continuous guard railing installation between structures)
See Notes 6 and 9

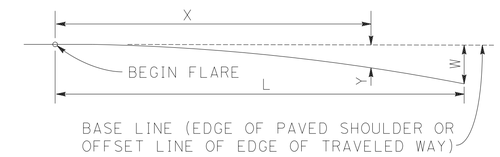

$$Y = \frac{WX^2}{L^2}$$

Y = OFFSET FROM BASE LINE
W = MAXIMUM OFFSET
X = DISTANCE ALONG BASE LINE
L = LENGTH OF FLARE

PARABOLIC FLARE OFFSETS

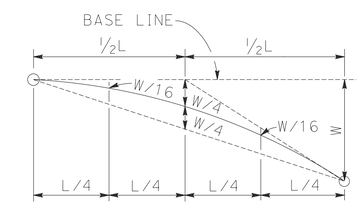

TYPICAL PARABOLIC LAYOUT

NOTES:

1. Line post, blocks and hardware to be used are shown on sheets C-7, C-8 & C-9.
2. Guard rail post spacing to be 6'-3" center to center, except as otherwise noted.
3. Except as noted, line posts are 6" x 8" x 6'-0" m wood with 6" x 8" x 1'-2" wood blocks.
4. Direction of adjacent traffic indicated by ⟹.
5. For Transition Railing (Type WB) details for Types 12C and 12D Layouts, see sheet C-18.
6. Type 12D layout is typically used where continous guard railing is recommended between structures.
7. The 15:1 or flatter flare for Type 12C Layout is based on the edge of the paved shoulder or offset line of edge of the traveled way. The length of guard railing with the 15:1 or flatter flare is based on site conditions and should be a length equal to multiples of 12'-6".
8. For details of the buried post end anchor used with Type 12C Layout, see sheet C-14.
9. Type 12C Layout is typically used:
   a. To the right of approaching traffic, at the end of the structure, on two-lane conventional highway where the roadbed width across the structure is less than 40 feet.
   b. To the left of approaching traffic, at each of a structure, on two-lane conventional highway where the roadbed width across the structure is less than 40 feet.
   c. To the right of approaching traffic at the end of each structure on multilane freeways or expressways with separate adjacent or parallel bridges.
   d. To the right of approaching traffic at the end of the structure on multilane freeways or expressways with decked median on the bridge.
10. For additional details of typical connections to bridge rail, see sheets C-15 & C-16.
11. For additional details of a typical connection to walls or abutments, see sheet C-17.

METAL BEAM GUARD RAILING TYPICAL LAYOUTS FOR STRUCTURE APPROACH AND BETWEEN STRUCTURES

CONSTRUCTION DETAILS

C-12

NO SCALE

REVISED BY | DATE REVISED
BIJAN SAMRAD | TOM PHILLIPS
CALCULATED-DESIGNED BY | CHECKED BY
FUNCTIONAL SUPERVISOR | L.R. ASHLEY

STATE OF CALIFORNIA - DEPARTMENT OF TRANSPORTATION
Caltrans® DESIGN

P:\PROJ\01\0B080\drafting\01_0002044 5\0100020445ga012.dgn

LAST REVISION 05-12-14 | DATE PLOTTED => 02-JUN-2014 | TIME PLOTTED => 09:17

Dist	COUNTY	ROUTE	POST MILES TOTAL PROJECT	SHEET No.	TOTAL SHEETS
01	DN	101	R4.4/9.4	15	47

REGISTERED CIVIL ENGINEER 5-12-14 DATE

May 12, 2014
PLANS APPROVAL DATE

REGISTERED PROFESSIONAL ENGINEER Thomas Jon Phillips No. 64633 Exp. 6/30/15 CIVIL STATE OF CALIFORNIA

THE STATE OF CALIFORNIA OR ITS OFFICERS OR AGENTS SHALL NOT BE RESPONSIBLE FOR THE ACCURACY OR COMPLETENESS OF SCANNED COPIES OF THIS PLAN SHEET.

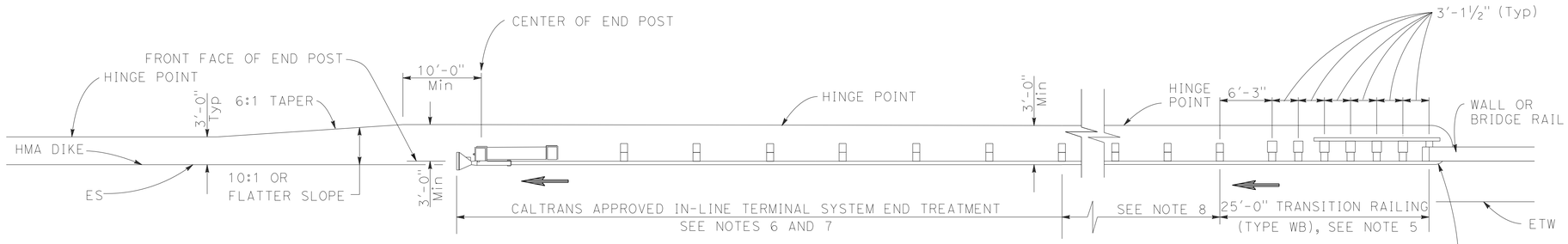

TYPE 12AA LAYOUT

(Guard railing installation at structure departure with
An in-line end treatment at trailing end of railing)
See Note 9

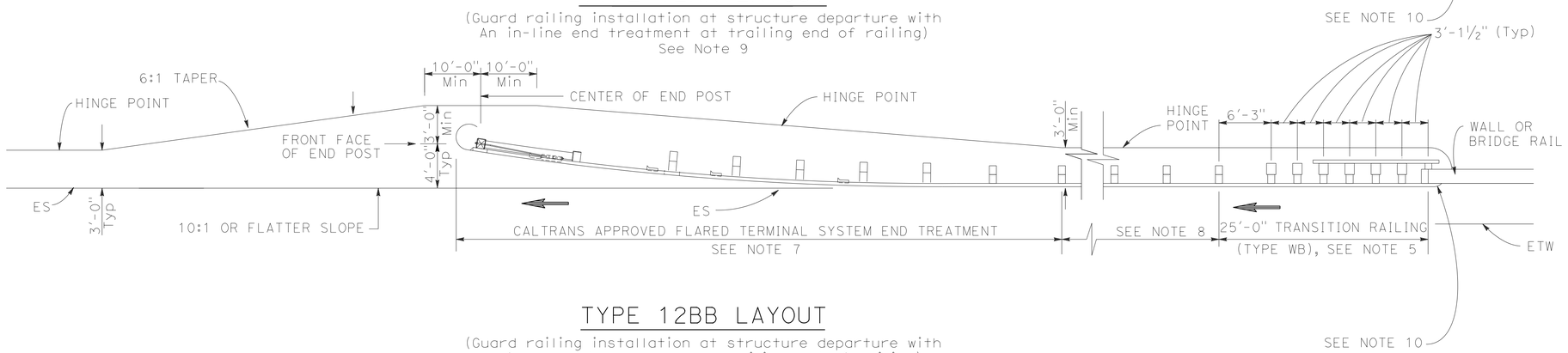

TYPE 12BB LAYOUT

(Guard railing installation at structure departure with
A flared end treatment at trailing end of railing)
See Note 9

NOTES:

1. Line post, blocks and hardware to be used are shown on sheets C-7, C-8 & C-9.
2. Guard rail post spacing to be 6'-3" center to center, except as otherwise noted.
3. Except as noted, line posts are 6" x 8" x 6'-0" wood with 6" x 8" x 1'-2" wood blocks.
4. Direction of adjacent traffic indicated by ➡.
5. For Transition Railing (Type WB) details for Types 12AA and 12BB Layouts, see sheet C-18.
6. In-line Terminal System Treatments are used where site conditions will not accommodate a flared end treatment.
7. The type of terminal system to be used will be shown on the Project Plans.
8. Dependent on site conditions (embankment height, side slopes, other fixed objects), it may be advisable to construct additional guard railing (a length equal to multiples of 12'-6" with 6'-3" post spacing) between the transition railing and end treatments.
9. Type 12AA or Type 12BB Layouts are typically used to the right of traffic departing a structure on two-way conventional highways where the roadbed width across the structure is less than 40 feet.
10. For additional details of typical connections to bridge rail, see Connection Detail CC on sheet C-16.

METAL BEAM GUARD RAILING TYPICAL LAYOUTS FOR STRUCTURE DEPARTURE

CONSTRUCTION DETAILS C-13

NO SCALE

REVISED BY | DATE REVISED
BIJAN SAMRAD | TOM PHILLIPS
CALCULATED-DESIGNED BY | CHECKED BY
FUNCTIONAL SUPERVISOR: L.R. ASHLEY

STATE OF CALIFORNIA - DEPARTMENT OF TRANSPORTATION
Caltrans® DESIGN

P:\PROJ\01\0B080\drafting\01_00020445\0100020445ga013.dgn

LAST REVISION 05-12-14 | DATE PLOTTED => 02-JUN-2014 TIME PLOTTED => 09:17

Dist	COUNTY	ROUTE	POST MILES TOTAL PROJECT	SHEET No.	TOTAL SHEETS
01	DN	101	R4.4/9.4	16	47

REGISTERED CIVIL ENGINEER 5-12-14 DATE

May 12, 2014
PLANS APPROVAL DATE

REGISTERED PROFESSIONAL ENGINEER Thomas Jon Phillips No. 64633 Exp. 6/30/15 CIVIL STATE OF CALIFORNIA

THE STATE OF CALIFORNIA OR ITS OFFICERS OR AGENTS SHALL NOT BE RESPONSIBLE FOR THE ACCURACY OR COMPLETENESS OF SCANNED COPIES OF THIS PLAN SHEET.

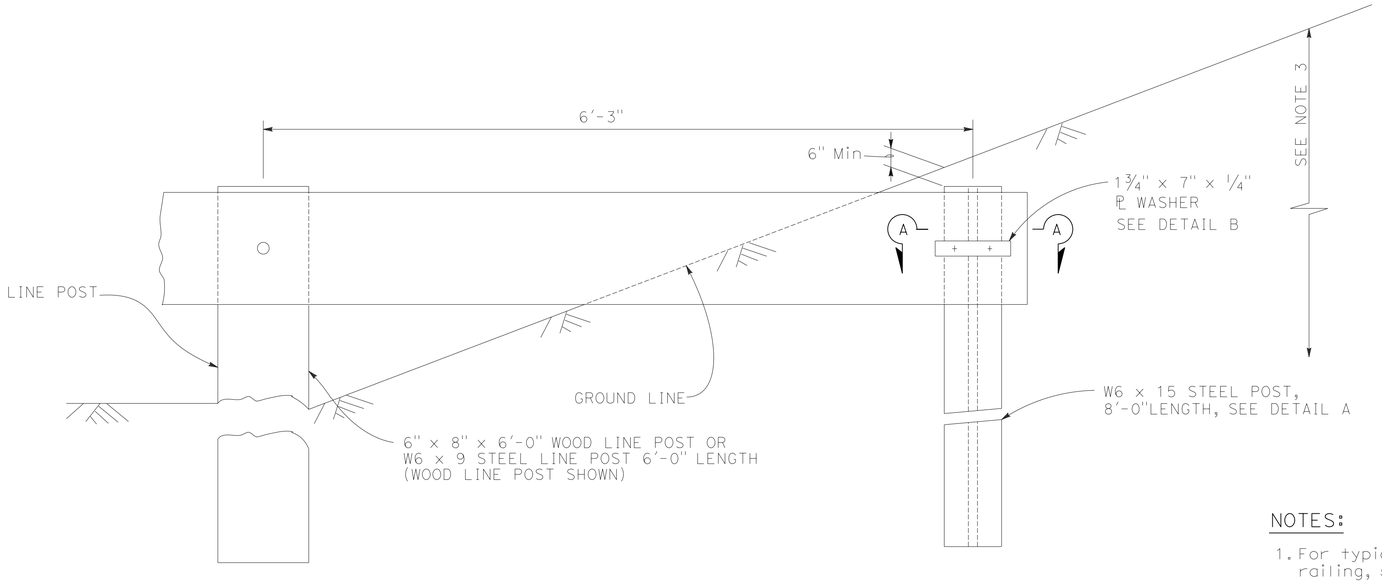

BURIED POST END ANCHOR

See Note 3

NOTES:

1. For typical use of this type of end anchor with guard railing, see sheets C-11, C-12 & C-13.
2. Holes excavation in the slope to construct the buried post end anchor shall be backfilled with selected earth, placed in layers approximately 1'-0" thick. Each layer shall be moistened and thoroughly compacted.
3. The buried post end anchor shall only be constructed at those locations where the slope perpendicular to the roadway is non-traversable.

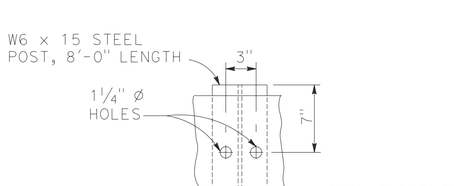

DETAIL A

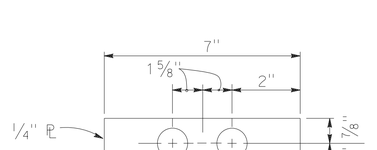

DETAIL B

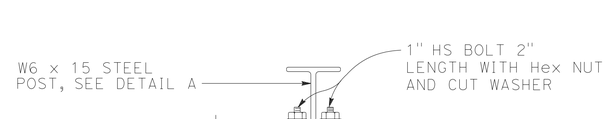

SECTION A-A

METAL BEAM GUARD RAILING BURIED POST END ANCHOR CONSTRUCTION DETAILS C-14

NO SCALE

REVISED BY | DATE REVISED
BIJAN SAMRAD | TOM PHILLIPS
CALCULATED-DESIGNED BY | CHECKED BY
FUNCTIONAL SUPERVISOR | L.R. ASHLEY

STATE OF CALIFORNIA - DEPARTMENT OF TRANSPORTATION
Caltrans DESIGN

P:\PROJ\01\0B080\drafting\01_00020445\0100020445ga014.dgn

LAST REVISION 05-12-14 | DATE PLOTTED => 02-JUN-2014 TIME PLOTTED => 09:17

BORDER LAST REVISED 7/2/2010 | USERNAME => s132662 DGN FILE => 0100020445ga014.dgn | RELATIVE BORDER SCALE IS IN INCHES 0 1 2 3 | UNIT 0313 | PROJECT NUMBER & PHASE 01000204451

Dist	COUNTY	ROUTE	POST MILES TOTAL PROJECT	SHEET No.	TOTAL SHEETS
01	DN	101	R4.4/9.4	17	47

REGISTERED CIVIL ENGINEER 5-12-14 DATE

May 12, 2014
PLANS APPROVAL DATE

REGISTERED PROFESSIONAL ENGINEER Thomas Jon Phillips No. 64633 Exp. 6/30/15 CIVIL STATE OF CALIFORNIA

THE STATE OF CALIFORNIA OR ITS OFFICERS OR AGENTS SHALL NOT BE RESPONSIBLE FOR THE ACCURACY OR COMPLETENESS OF SCANNED COPIES OF THIS PLAN SHEET.

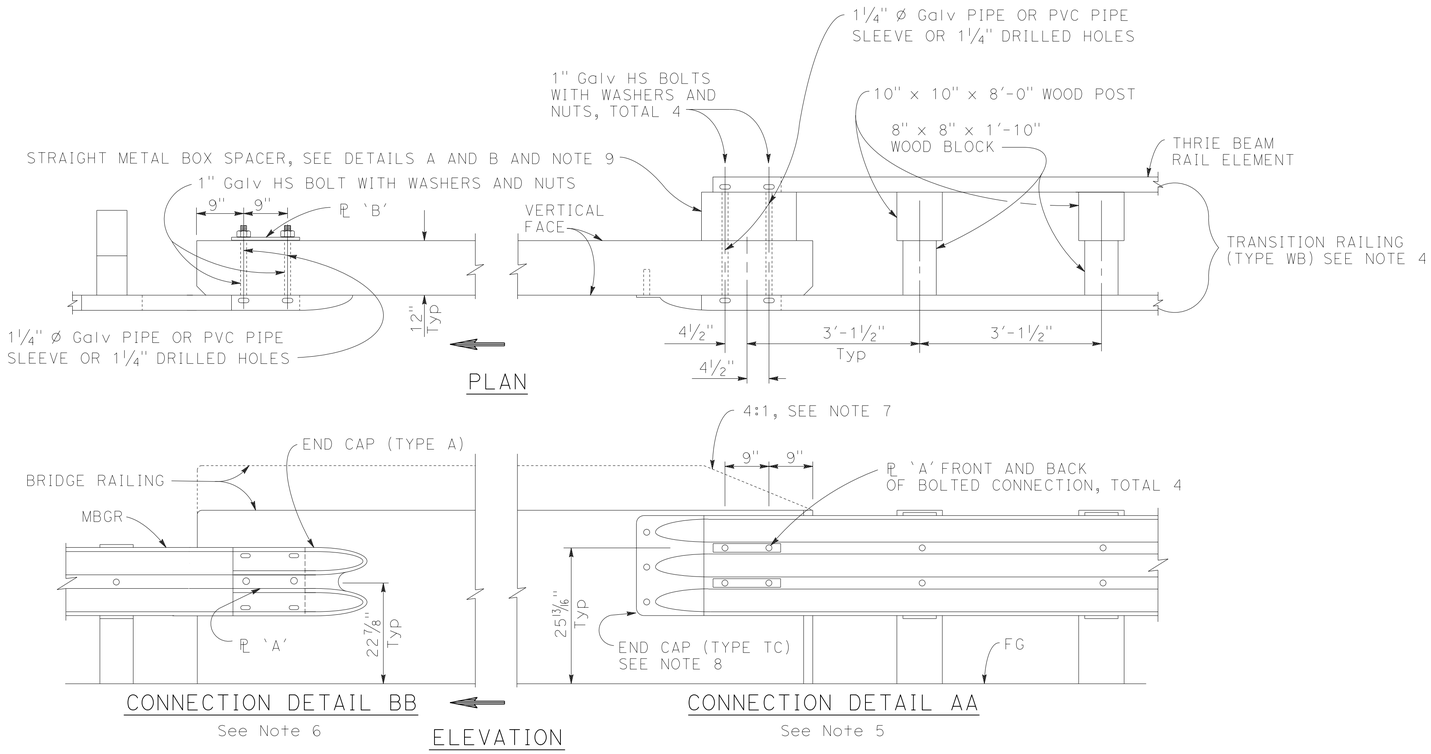

GUARD RAILING CONNECTION TO BRIDGE RAILING WITHOUT SIDEWALK

NOTES:

1. See sheet C-16 for additional connection details to bridges without sidewalks.
2. Additional details of posts, blocks and hardware are shown on sheets C-8 & C-10.
3. Direction of adjacent traffic indicated by ⟹.
4. For additional details of Transition Railing (Type WB), see sheet C-18. Transition Railing (Type WB) transitions the 12 gauge w-beam standard railing section of guard railing to a heavier gage nested thrie beam railing section which is connected to the concrete bridge railing.
5. For typical use of Connection Detail AA, see Layout Types 12A and 12B on sheet C-11, and layout Types 12C and 12D on sheet C-12.
6. For typical use of Connection Detail BB, see Layout Type 12D (structure departure railing connection) on sheet C-12.
7. Where the height of the bridge railing exceeds the height of the thrie beam railing by more than 1" at Connection Detail AA, taper the top of the end of the bridge railing at 4:1 to match the top elevation of the thrie beam rail.
8. For details of End Cap (Type TC), see sheet C-18.
9. See sheet C-18 for additional details regarding depth dimension for straight metal box spacer.

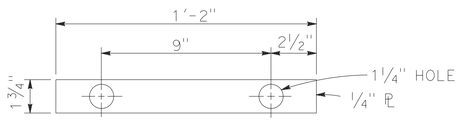

PLATE 'A'

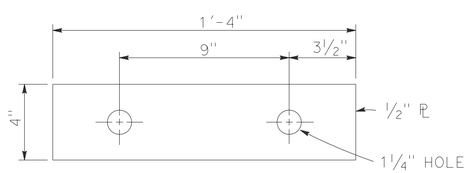

PLATE 'B'
(For backside of connection BB)

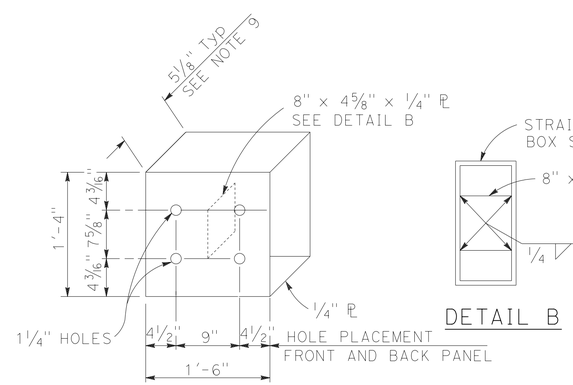

DETAIL A

STRAIGHT METAL BOX SPACER

METAL BEAM GUARD RAILING CONNECTIONS TO BRIDGE RAILINGS WITHOUT SIDEWALKS DETAILS No. 1

CONSTRUCTION DETAILS C-15

NO SCALE

REVISED BY | DATE REVISED
BIJAN SAMRAD | TOM PHILLIPS
CALCULATED-DESIGNED BY | CHECKED BY
FUNCTIONAL SUPERVISOR | L.R. ASHLEY

STATE OF CALIFORNIA - DEPARTMENT OF TRANSPORTATION
Caltrans® DESIGN

P:\PROJ\01\OB080\drafting\01_00020445\01000204445ga015.dgn

LAST REVISION 05-12-14 | DATE PLOTTED => 02-JUN-2014 | TIME PLOTTED => 09:17

Dist	COUNTY	ROUTE	POST MILES TOTAL PROJECT	SHEET No.	TOTAL SHEETS
01	DN	101	R4.4/9.4	18	47

REGISTERED CIVIL ENGINEER 5-12-14 DATE

May 12, 2014
PLANS APPROVAL DATE

REGISTERED PROFESSIONAL ENGINEER Thomas Jon Phillips No. 64633 Exp. 6/30/15 CIVIL STATE OF CALIFORNIA

THE STATE OF CALIFORNIA OR ITS OFFICERS OR AGENTS SHALL NOT BE RESPONSIBLE FOR THE ACCURACY OR COMPLETENESS OF SCANNED COPIES OF THIS PLAN SHEET.

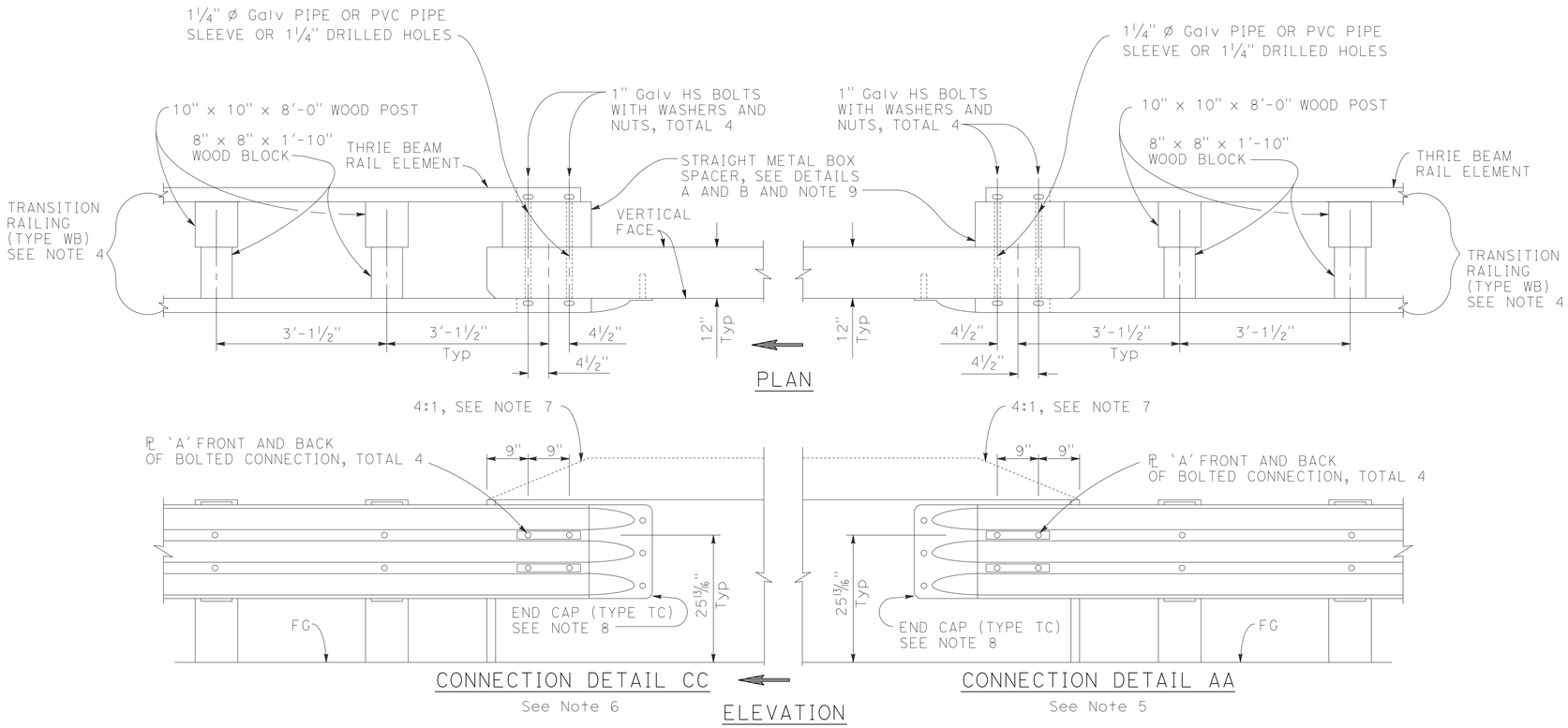

GUARD RAILING CONNECTION TO BRIDGE RAILING WITHOUT SIDEWALK

NOTES:

1. See sheet C-15 for additional connection details to bridges without sidewalks.
2. Additional details of posts, blocks and hardware are shown on sheets C-8 & C-9.
3. Direction of adjacent traffic indicated by ⟶.
4. For additional details of Transition Railing (Type WB), see sheet C-18. Transition Railing (Type WB) transitions the 12 gauge w-beam standard railing section of guard railing to a heavier gage nested thrie beam railing section which is connected to the concrete bridge railing.
5. For typical use of Connection Detail AA, see Layout Types 12A and 12B on sheet C-11, Layout Types 12C and 12D on sheet C-12.
6. For typical use of Connection Detail CC, see Layout Types 12AA and 12BB on sheet C-13.
7. Where the height of the bridge railing exceeds the height of the thrie beam railing by more than 1" at Connection Detail AA and connection Detail CC, taper the top of the end of the bridge railing at 4:1 to match the top elevation of the thrie beam railing.
8. For details of End Cap (Type TC), see sheet C-18.
9. See sheet C-18 for additional details regarding depth dimension for straight metal box spacer.

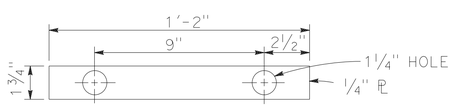

PLATE 'A'

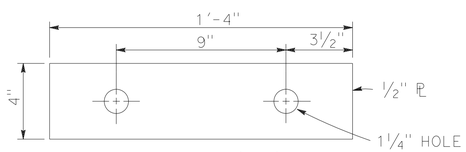

PLATE 'B'
(For backside of connection BB)

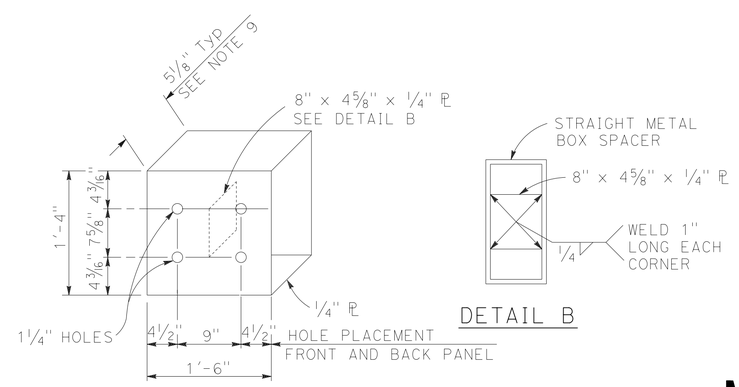

DETAIL A

DETAIL B

STRAIGHT METAL BOX SPACER

METAL BEAM GUARD RAILING CONNECTIONS TO BRIDGE RAILINGS WITHOUT SIDEWALKS DETAILS No. 2

CONSTRUCTION DETAILS C-16

NO SCALE

REVISED BY	DATE REVISED

BIJAN SAMRAD — TOM PHILLIPS — CALCULATED-DESIGNED BY — CHECKED BY

FUNCTIONAL SUPERVISOR: L.R. ASHLEY

STATE OF CALIFORNIA - DEPARTMENT OF TRANSPORTATION — DESIGN — Caltrans

P:\PROJ\01\0B080\drafting\01_00020445\0100020445ga016.dgn

LAST REVISION 05-12-14 — DATE PLOTTED => 02-JUN-2014 — TIME PLOTTED => 09:17

Dist	COUNTY	ROUTE	POST MILES TOTAL PROJECT	SHEET No.	TOTAL SHEETS
01	DN	101	R4.4/9.4	19	47

REGISTERED CIVIL ENGINEER 5-12-14 DATE

May 12, 2014
PLANS APPROVAL DATE

REGISTERED PROFESSIONAL ENGINEER Thomas Jon Phillips No. 64633 Exp. 6/30/15 CIVIL STATE OF CALIFORNIA

THE STATE OF CALIFORNIA OR ITS OFFICERS OR AGENTS SHALL NOT BE RESPONSIBLE FOR THE ACCURACY OR COMPLETENESS OF SCANNED COPIES OF THIS PLAN SHEET.

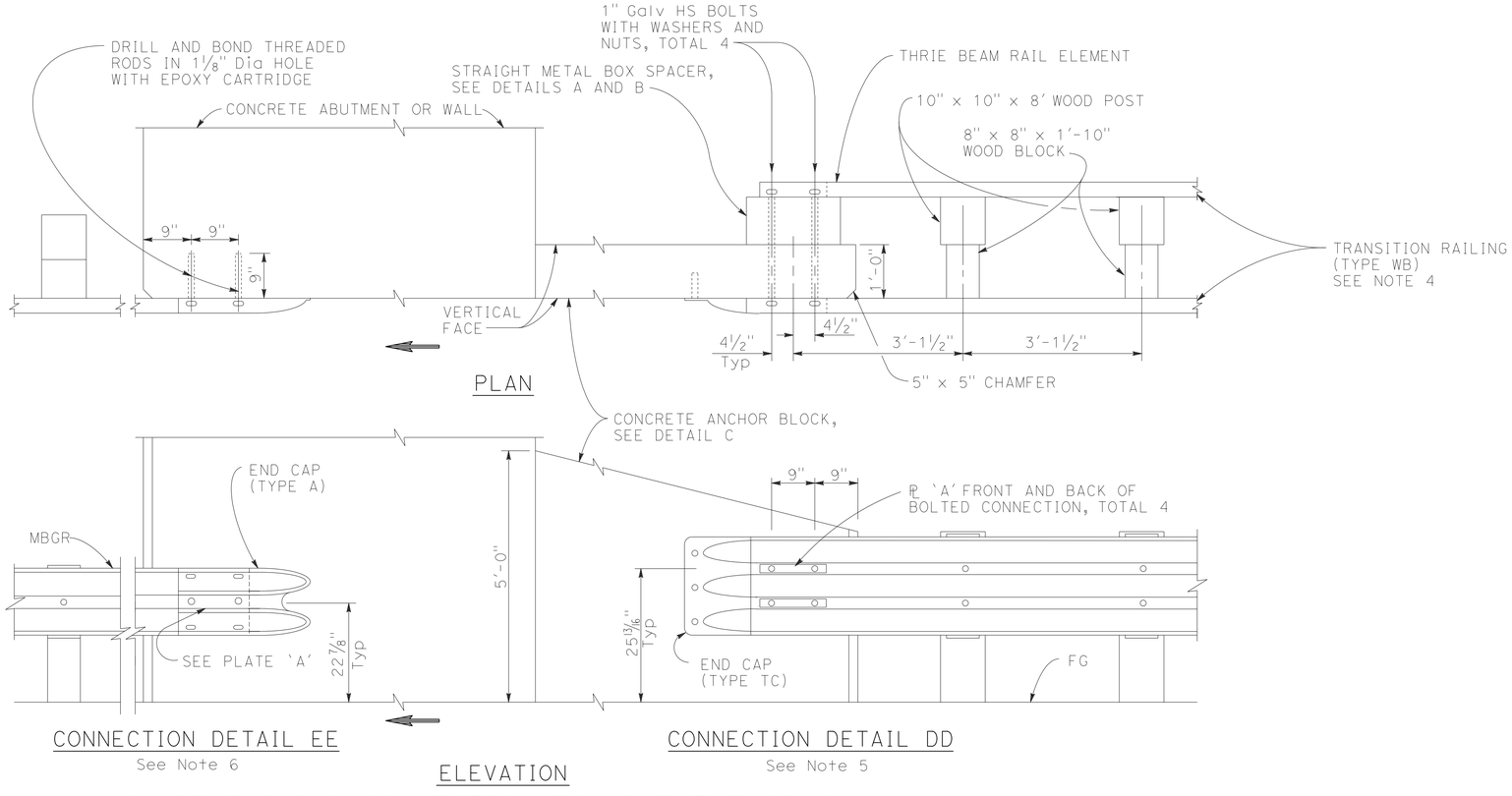

GUARD RAILING CONNECTION TO ABUTMENT OR WALL

NOTES:

1. These connection details apply to abutments and walls.
2. Additional details of posts, blocks and hardware are shown on sheets C-8 & C-9.
3. Direction of adjacent traffic indicated by ⟶.
4. For additional details of Transition Railing (Type WB), see sheet C-18 Transition Railing (Type WB) transitions the 12 gauge w-beam standard railing section of guard railing to a heavier gage nested thrie beam railing section which is connected to the concrete anchor block.
5. For typical use of Connection Details DD, See Layout Types 12A and 12B on sheet C-11 and Layout Types 12C and 12D on sheet C-12.
6. For typical use of Connection Detail EE, see Layout Type 12D on sheet C-12.

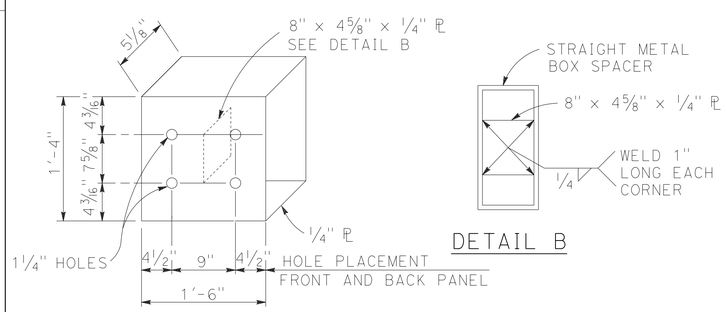

DETAIL A

STRAIGHT METAL BOX SPACER

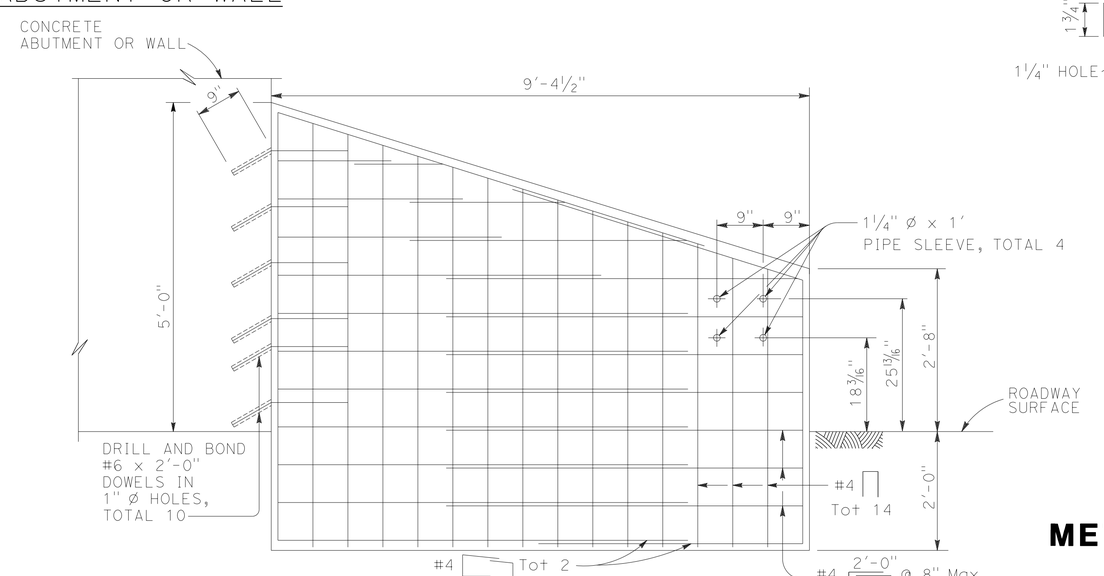

ELEVATION

ANCHOR BLOCK FOR TRANSITION RAILING CONNECTION

DETAIL C

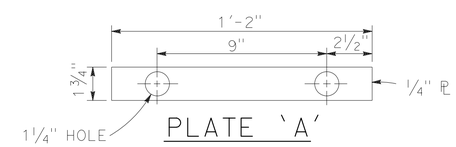

PLATE 'A'

NO SCALE

METAL BEAM GUARD RAILING CONNECTIONS TO ABUTMENTS AND WALLS

CONSTRUCTION DETAILS

C-17

REVISED BY | DATE REVISED
BIJAN SAMRAD | TOM PHILLIPS
CALCULATED-DESIGNED BY | CHECKED BY
FUNCTIONAL SUPERVISOR | L.R. ASHLEY

STATE OF CALIFORNIA - DEPARTMENT OF TRANSPORTATION
Caltrans® DESIGN

P:\PROJ\01\0B080\drafting\01_00020445\010002044 5ga017.dgn

LAST REVISION 05-12-14 | DATE PLOTTED => 02-JUN-2014 | TIME PLOTTED => 09:17

Dist	COUNTY	ROUTE	POST MILES TOTAL PROJECT	SHEET No.	TOTAL SHEETS
01	DN	101	R4.4/9.4	20	47

REGISTERED CIVIL ENGINEER 5-12-14 DATE

May 12, 2014
PLANS APPROVAL DATE

REGISTERED PROFESSIONAL ENGINEER Thomas Jon Phillips No. 64633 Exp. 6/30/15 CIVIL STATE OF CALIFORNIA

THE STATE OF CALIFORNIA OR ITS OFFICERS OR AGENTS SHALL NOT BE RESPONSIBLE FOR THE ACCURACY OR COMPLETENESS OF SCANNED COPIES OF THIS PLAN SHEET.

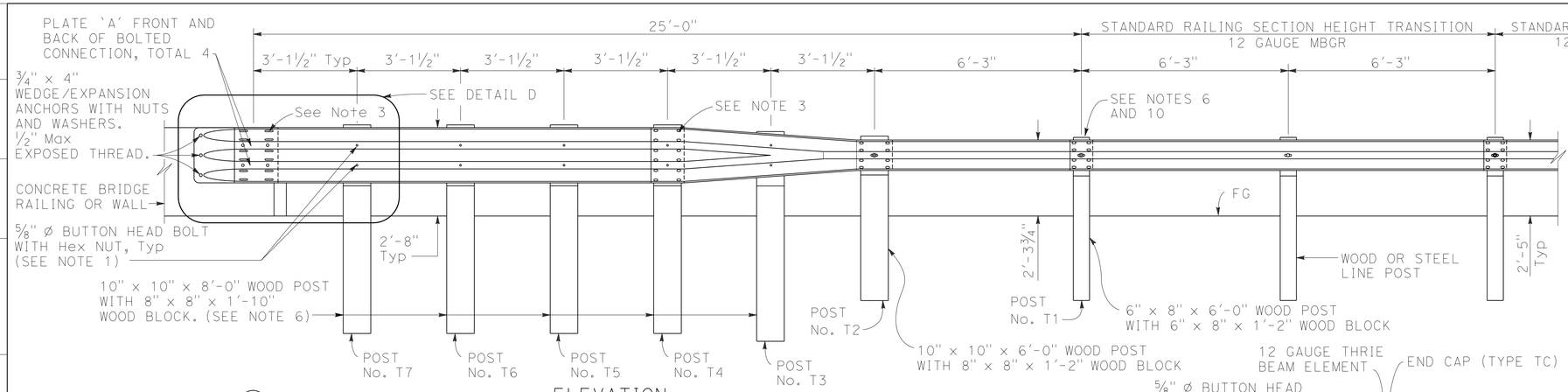

ELEVATION

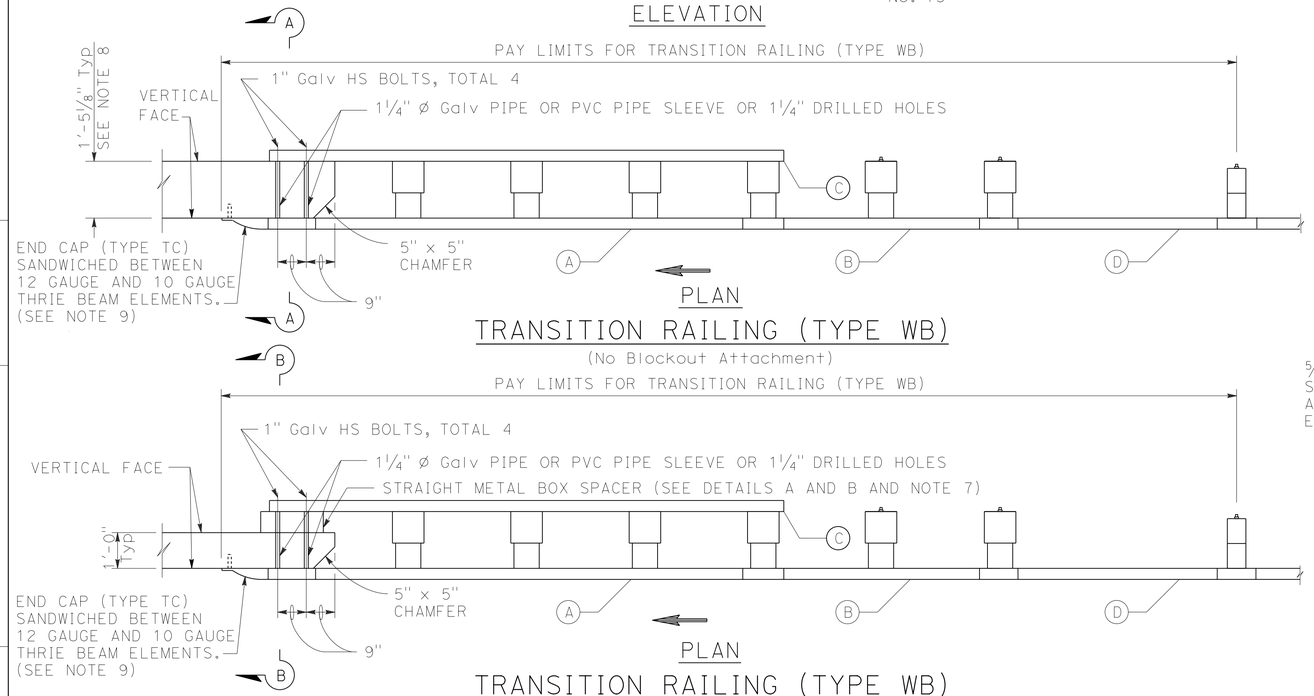

PLAN

TRANSITION RAILING (TYPE WB)

(No Blockout Attachment)

PLAN

TRANSITION RAILING (TYPE WB)

(Blockout Attachment)

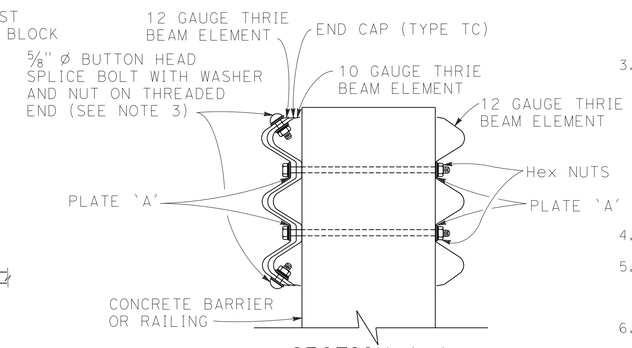

SECTION A-A

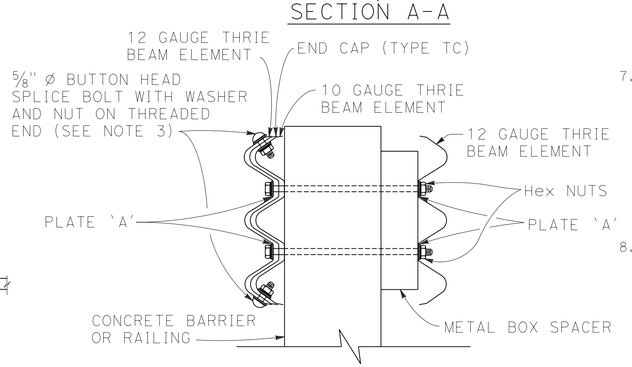

SECTION B-B

NOTES:

1. Use ⅝" Ø Button head bolts and hex nuts for connections to posts. No washer on rail face for bolted connections to post.
2. The nested rail elements, end cap, and 'W' beam to thrie beam element may be spliced together prior to bolting the elements to the wood post and concrete barrier or railing.
3. Exterior splice bolt holes for rail element splices at Post No. T4 and the connection to the concrete barrier or railing shall be the standard $^{29}/_{32}$" x 1⅛" slot size. Interior splice bolt holes at these locations may be increased up to 1¼" Ø. Only the top 2 and the bottom 2 splice bolts with washers and nuts are required for rail splices at Post No. T4 and the connection to the concrete barrier or railing.
4. Direction of adjacent traffic indicated by ⟶.
5. The top elevation of Posts No. T2 through No. T7 shall not project more than 1" above the top elevation of the rail element.
6. Typically, the railing connected to Transition Railing (Type WB) will be either standard railing section of metal beam guard railing with height transition ratio of 120:1 or an approved Caltrans end treatment attached to Post No. T1.
7. The depth of the metal box spacer varies from the 5⅛" to 1½" and is dependent on the width of the concrete railing or wall. The combined dimension for the depth of the metal box spacer plus the width of railing or wall is typically 17⅛". Where the space between the backside of the concrete railing or wall and the rear thrie beam element is less than 1½", metal plates similar to Plate 'A' are to be used as spacers.
8. Where the width of the concrete railing or wall is greater than 17⅛", wood blocks are to be used to fill the space created between the backside of Posts No. T4 through No. T7 and the rear thrie beam element. These wood blocks shall be 8" in width and 1'-2" in length. The dimension between the front thrie beam element and the rear thrie beam element is to match the width of the concrete railing or wall.
9. End cap may be installed over 12 gauge and 10 gauge thrie beam elements where transition railing is installed on the departure end of bridge railing.
10. Conform standard railing section height to 2'-3¾" at Post No. T1 using height transition ratio of 120:1.

LEGEND

(A) NESTED THRIE BEAM ELEMENTS (ONE 12 GAUGE ELEMENT NESTED OVER ONE 10 GAUGE ELEMENT).

(B) ONE 10 GAUGE "W" BEAM TO THRIE BEAM ELEMENT.

(C) ONE 12 GAUGE THRIE BEAM ELEMENT.

(D) ONE 10 GAUGE "W" BEAM RAIL ELEMENT (7'-3½" LENGTH)

10 GAUGE = 0.135" THICK

12 GAUGE = 0.108" THICK

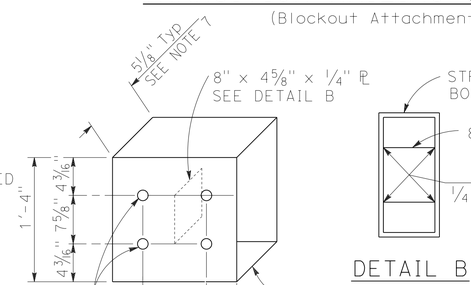

DETAIL A

STRAIGHT METAL BOX SPACER

DETAIL B

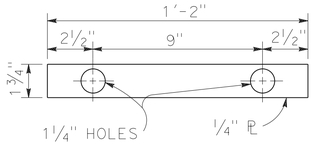

DETAIL C

PLATE 'A'

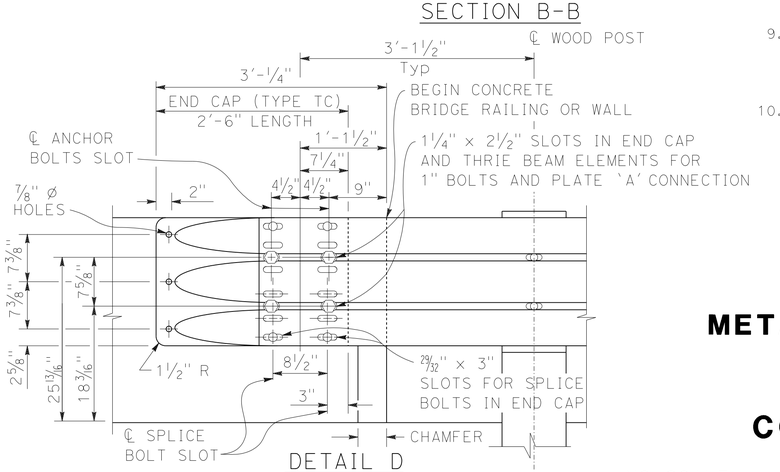

DETAIL D

NO SCALE

METAL BEAM GUARD RAILING TRANSITION RAILING (TYPE WB)

CONSTRUCTION DETAILS C-18

REVISED BY | DATE REVISED | BIJAN SAMRAD | TOM PHILLIPS | CALCULATED-DESIGNED BY | CHECKED BY | FUNCTIONAL SUPERVISOR | L.R. ASHLEY

STATE OF CALIFORNIA - DEPARTMENT OF TRANSPORTATION

Caltrans® DESIGN

P:\PROJ\01\0B080\drafting\01_00020445\0100020445ga018.dgn

LAST REVISION 05-12-14 | DATE PLOTTED => 02-JUN-2014 | TIME PLOTTED => 09:17

Dist	COUNTY	ROUTE	POST MILES TOTAL PROJECT	SHEET No.	TOTAL SHEETS
01	DN	101	R4.4/9.4	21	47

REGISTERED CIVIL ENGINEER 5-12-14 DATE

May 12, 2014
PLANS APPROVAL DATE

REGISTERED PROFESSIONAL ENGINEER Thomas Jon Phillips No. 64633 Exp. 6/30/15 CIVIL STATE OF CALIFORNIA

THE STATE OF CALIFORNIA OR ITS OFFICERS OR AGENTS SHALL NOT BE RESPONSIBLE FOR THE ACCURACY OR COMPLETENESS OF SCANNED COPIES OF THIS PLAN SHEET.

NOTES:

1. EXACT SIGN LOCATIONS TO BE DETERMINED BY THE ENGINEER.
2. EXISTING UTILITIES HAVE NOT BEEN PLOTTED ON THESE PLANS.

STATIONARY MOUNTED CONSTRUCTION AREA SIGNS

SIGN NO.	SIGN CODE	SIGN MESSAGE	PANEL SIZE (IN x IN)	NO OF POSTS AND SIZE (IN x IN)	NO.OF SIGNS
A	G20-1	ROAD WORK NEXT 7 MILES	90x48	2-6x6	1
	C23B (CA)	RESURFACING	52x18		
B	G20-1	ROAD WORK NEXT 7 MILES	60x36	2-4x6	2
	C23B (CA)	RESURFACING	52x18		
C	G20-2	END ROAD WORK	36x18	1-4x4	3
D	W11-1	BICYCLE SYMBOL	36x36	1-4x6	3
	W16-1	SHARE THE ROAD	24x30		
E	W20-1	ROAD WORK AHEAD	36x36	1-4x6	10
F	C40 (CA)	TRAFFIC FINES DOUBLED IN CONSTRUCTION ZONE	144x60	2-6x8	1
G	C40 (CA)	TRAFFIC FINES DOUBLED IN CONSTRUCTION ZONE	108x42	2-6x6	2

52" x 18"
4" CAPS
BLACK/ORANGE

RESURFACING

C23B(CA)

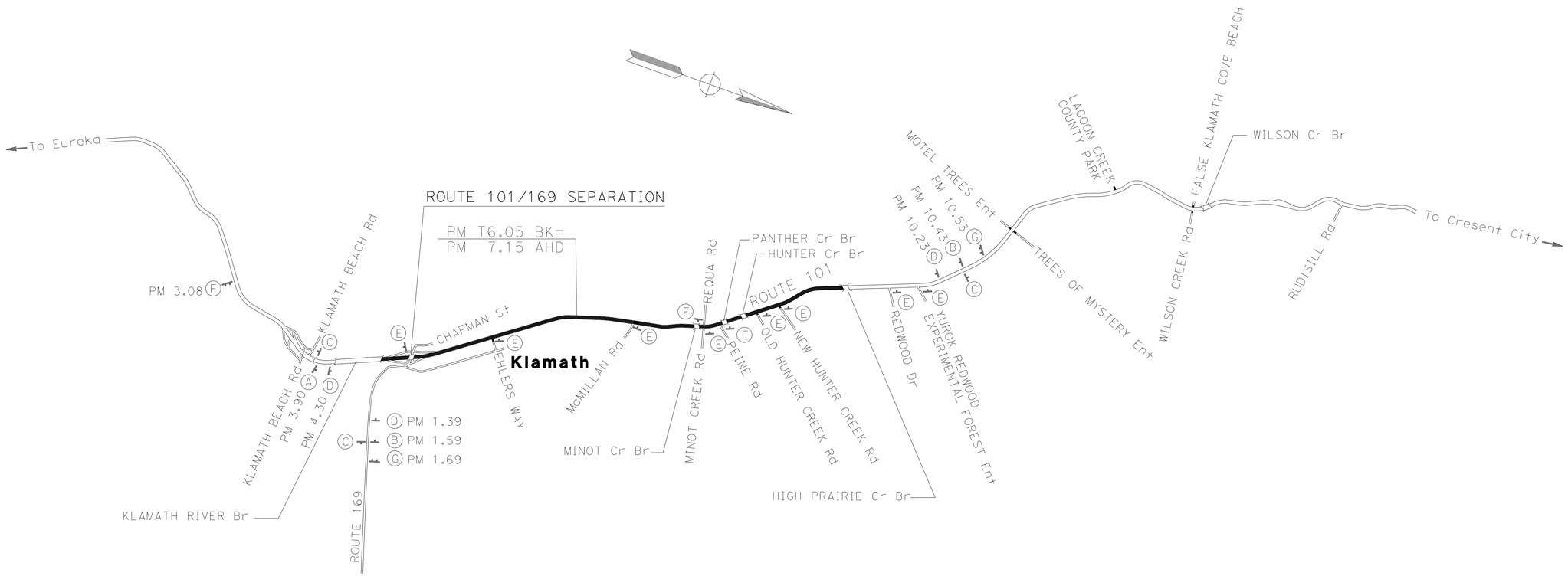

APPROVED FOR CONSTRUCTION AREA SIGN WORK ONLY

NO SCALE

CONSTRUCTION AREA SIGNS
CS-1

REVISED BY | DATE REVISED
BIJAN SAMRAD | TOM PHILLIPS
CALCULATED-DESIGNED BY | CHECKED BY
FUNCTIONAL SUPERVISOR | L.R. ASHLEY
STATE OF CALIFORNIA - DEPARTMENT OF TRANSPORTATION
Caltrans
DESIGN
P:\PROJ\01\0B080\drafting\01_00020445\01000204451a001.dgn

LAST REVISION 05-12-14 | DATE PLOTTED => 02-JUN-2014 | TIME PLOTTED => 09:17

Dist	COUNTY	ROUTE	POST MILES TOTAL PROJECT	SHEET No.	TOTAL SHEETS
01	DN	101	R4.4/9.4	22	47

REGISTERED CIVIL ENGINEER 5-12-14 DATE

May 12, 2014
PLANS APPROVAL DATE

REGISTERED PROFESSIONAL ENGINEER Thomas Jon Phillips No. 64633 Exp. 6/30/15 CIVIL STATE OF CALIFORNIA

THE STATE OF CALIFORNIA OR ITS OFFICERS OR AGENTS SHALL NOT BE RESPONSIBLE FOR THE ACCURACY OR COMPLETENESS OF SCANNED COPIES OF THIS PLAN SHEET.

NOTES:

1. THE DETAILS SHOWN ARE FOR USE IN PROVIDING ANCHOR BLOCK PROTECTION DURING CURING.
2. APPROXIMATE CONCRETE CURING TIME IS 7-10 DAYS.
3. EXACT LOCATION OF TEMPORARY RAILING (TYPE K) AND CHANNELIZERS TO BE DETERMINED BY THE ENGINEER.
4. TEMPORARY RAILING (TYPE K) SHALL BE STAKED.

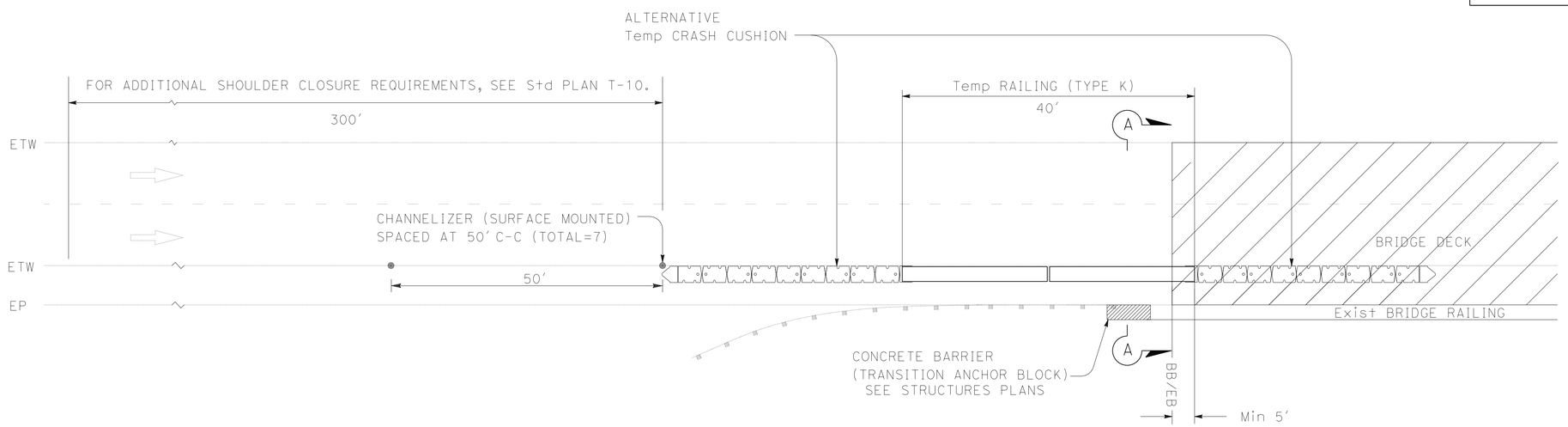

PLAN

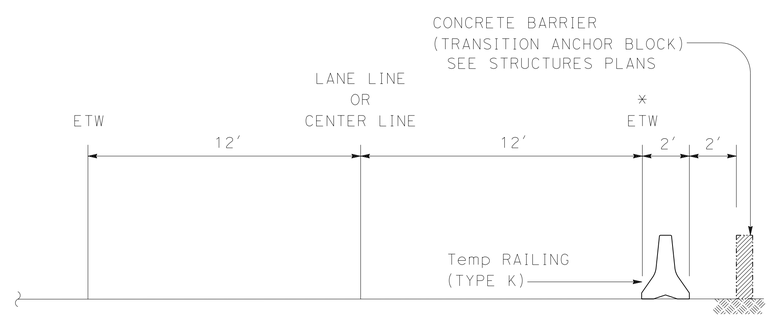

SECTION A-A

* TEMPORARY RAILING (K-RAIL) SHALL BE PLACED ON ETW FOR 4' SHOULDERS ONLY.
FOR ALL SHOULDERS > 4', PROVIDE REDUCED SHOULDER (SHOULDER WIDTH MINUS 4').

TRAFFIC CONTROL AT CONCRETE BARRIER (TRANSITION ANCHOR BLOCK) LOCATIONS

APPROVED FOR TRAFFIC HANDLING WORK ONLY

NO SCALE

TRAFFIC HANDLING DETAILS THD-1

REVISED BY | DATE REVISED
BIJAN SAMRAD | TOM PHILLIPS
CALCULATED-DESIGNED BY | CHECKED BY
FUNCTIONAL SUPERVISOR: L.R. ASHLEY

STATE OF CALIFORNIA - DEPARTMENT OF TRANSPORTATION
Caltrans® DESIGN

P:\PROJ\01\0B080\drafting\01_00020445\01000204451md001.dgn

LAST REVISION 05-12-14 | DATE PLOTTED => 02-JUN-2014 TIME PLOTTED => 09:17

BORDER LAST REVISED 7/2/2010 | USERNAME => s132662 DGN FILE => 01000204451md001.dgn | RELATIVE BORDER SCALE IS IN INCHES 0 1 2 3 | UNIT 0313 | PROJECT NUMBER & PHASE 01000204451

Dist	COUNTY	ROUTE	POST MILES TOTAL PROJECT	SHEET No.	TOTAL SHEETS
01	DN	101	R4.4/9.4	23	47

REGISTERED CIVIL ENGINEER 5-12-14 DATE

May 12, 2014
PLANS APPROVAL DATE

REGISTERED PROFESSIONAL ENGINEER Thomas Jon Phillips No. 64633 Exp. 6/30/15 CIVIL STATE OF CALIFORNIA

THE STATE OF CALIFORNIA OR ITS OFFICERS OR AGENTS SHALL NOT BE RESPONSIBLE FOR THE ACCURACY OR COMPLETENESS OF SCANNED COPIES OF THIS PLAN SHEET.

TRAFFIC CONTROL ITEMS

BRIDGE No.	STRUCTURE NAME	ROUTE	POST MILE	NB/SB	DEPARTURE/ APPROACH	* LENGTH OF TRANSITION ANCHOR BLOCK	TEMPORARY RAILING (TYPE K)	CHANNELIZER (SURFACE MOUNTED)	ALTERNATIVE TEMPORARY CRASH CUSHION
						LF		EA	
01-0026	ROUTE 101/169 SEPARATION	101	R4.64	NB	APP	3.5	40	7	2
					DEP	3.5	40	7	2
				SB	APP	3.5	40	7	2
					DEP	3.5	40	7	2
01-0026K	HOPPOW CREEK (101 SB OFFRAMP)	101	R4.76	SB	APP (R†)	3.5	40	7	2
					APP (L†)	5.0	40	7	2
01-0026F	HOPPOW CREEK (101 NB ONRAMP)	101	R4.81	NB	APP (R†)	10.0	40	7	2
01-0004	HIGH PRAIRIE CREEK	101	9.39	NB	APP (R†)	6.0	40	7	2
					APP (L†)	6.0	40	7	2
					TOTAL	44.5	360	63	18

* SEE STRUCTURES PLANS

TRAFFIC HANDLING QUANTITIES
THQ-1

NO SCALE

REVISED BY | DATE REVISED
BIJAN SAMRAD | TOM PHILLIPS
CALCULATED-DESIGNED BY | CHECKED BY
FUNCTIONAL SUPERVISOR | L.R. ASHLEY

STATE OF CALIFORNIA - DEPARTMENT OF TRANSPORTATION
Caltrans® DESIGN

P:\PROJ\01\0B080\drafting\01_00020445\0100020445mf001.dgn

LAST REVISION 05-12-14 | DATE PLOTTED => 02-JUN-2014 TIME PLOTTED => 09:17

Dist	COUNTY	ROUTE	POST MILES TOTAL PROJECT	SHEET No.	TOTAL SHEETS
01	DN	101	R4.4/9.4	24	47

REGISTERED CIVIL ENGINEER 5-12-14 DATE

May 12, 2014
PLANS APPROVAL DATE

REGISTERED PROFESSIONAL ENGINEER Thomas Jon Phillips No. 64633 Exp. 6/30/15 CIVIL STATE OF CALIFORNIA

THE STATE OF CALIFORNIA OR ITS OFFICERS OR AGENTS SHALL NOT BE RESPONSIBLE FOR THE ACCURACY OR COMPLETENESS OF SCANNED COPIES OF THIS PLAN SHEET.

REMOVE TRAFFIC STRIPE AND PAVEMENT MARKER QUANTITIES

LOCATION (PM)			THERMOPLASTIC TRAFFIC STRIPE							PAVEMENT MARKERS (RETROREFLECTIVE)			REMARKS
		DETAIL NUMBER	4" YELLOW (BROKEN) (19)	4" YELLOW (SOLID) (22)	4" YELLOW (SOLID) (29)	4" YELLOW (SOLID/BROKEN) (32)	4" WHITE (SOLID) (27B)	4" WHITE (BROKEN 17-7) (8)	8" WHITE (SOLID) (36/36A/38)	TYPE D	TYPE G	TYPE H	
FROM	TO		LF							EA			
R4.038	R4.424	-											KLAMATH RIVER BRIDGE
R4.42	R4.638	22 & 27B		2302.1			2302.1			96			ROUTE 101
R4.47	R4.525	27B & 36					290.4		580.8		24		NB OFF RAMP
R4.5	R4.52	8						82.3					SB
R4.518	R4.551	27B & 36A					174.2		348.5		15		SB ON RAMP
R4.638	R4.67	22 & 27B		337.9			169.0			14			101/169
R4.67	8.14	22 & 27B		36643.2			36643.2			1527			ROUTE 101
R4.785	R4.816	36A							327.4		14		NB ON RAMP
R4.816	R4.851	8						130.9					NB
R4.802	R4.851	27B & 38					258.7		517.4		22		SB OFF RAMP
R5.28	R5.33	38							369.6				RIGHT TURN POCKET
R5.26	R5.33	29			1478.4					31			NO TURN ISLAND
R5.32	R5.324	22 & 38		42.2					21.1	2			EHLERS Ave
R5.345	R5.38	29							184.8		10		LEFT TURN POCKET
R5.39	R5.46	29			1478.4					31			NO TURN ISLAND
T5.82	T5.92	29			2112.0					44			TURN ISLAND
T5.92	T6.05	32				1372.8				57			TURN ISLAND
7.14	7.6	32				4857.6				202			6.05/7.14
7.608	7.614	22 & 38		63.4					31.7	3			McMILLAN ROAD
7.61	7.626	38							84.5				LEFT TURN POCKET
7.624	7.67	29			971.5					20			NO TURN ISLAND
8.08	8.135	29			1161.6					24			NO TURN ISLAND
8.139	8.148	22 & 27B		47.5			47.5			4			MINOT CREEK
8.153	8.178	38							132.0		8		LEFT TURN POCKET
8.173	8.179	22 & 38		63.4					31.7	3			REQUA ROAD
8.179	8.182	22 & 38		31.7					15.8	2			MINOT CREEK ROAD
8.185	8.195	22 & 38							52.8		4		LEFT TURN POCKET
8.198	8.27	29			1520.6					32			NO TURN ISLAND
8.3	8.33	22,8 & 38		39.6				112.2	26.4	13			PRIVATE ROAD
8.152	8.34	22 & 27B		992.6			992.6			83			ROUTE 101
8.339	8.365	22 & 27B		137.3			137.3			11			PANTHER CREEK
8.37	8.506	22		718.1						60			ROUTE 101
8.506	8.526	22 & 27B		105.6			105.6			9			HUNTER CREEK
8.615	8.647	22,8 & 38		56.3				119.7	28.2	14			PRIVATE ROAD
8.817	8.823	22,8 & 38		35.2					31.7	3			HUNTER CREEK ROAD
8.53	9.32	22		4171.2						348			ROUTE 101
9.32	9.392	22	388.1							18		18	ROUTE 101
		SUB TOTAL		45,787.3	8,722.5	6,230.4	41,120.6	445.1	2,784.3	2,651	97	18	
		TOTAL	61,178.3				41,565.7		2,784.3	2,651	97	18	
		GRAND TOTAL	105,528.3							2,766			

PAVEMENT DELINEATION QUANTITIES

NO SCALE

PDQ-1

REVISED BY	DATE REVISED
BIJAN SAMRAD	TOM PHILLIPS
CALCULATED-DESIGNED BY	CHECKED BY
FUNCTIONAL SUPERVISOR	L.R. ASHLEY

STATE OF CALIFORNIA - DEPARTMENT OF TRANSPORTATION

Caltrans® **DESIGN**

P:\PROJ\01\08080\drafting\01_00020445\0100020445nc001.dgn

LAST REVISION 05-12-14 | DATE PLOTTED => 02-JUN-2014 | TIME PLOTTED => 09:18

Dist	COUNTY	ROUTE	POST MILES TOTAL PROJECT	SHEET No.	TOTAL SHEETS
01	DN	101	R4.4/9.4	25	47

REGISTERED CIVIL ENGINEER 5-12-14 DATE

May 12, 2014
PLANS APPROVAL DATE

REGISTERED PROFESSIONAL ENGINEER Thomas Jon Phillips No. 64633 Exp. 6/30/15 CIVIL STATE OF CALIFORNIA

THE STATE OF CALIFORNIA OR ITS OFFICERS OR AGENTS SHALL NOT BE RESPONSIBLE FOR THE ACCURACY OR COMPLETENESS OF SCANNED COPIES OF THIS PLAN SHEET.

REMOVE THERMOPLASTIC PAVEMENT MARKINGS

LOCATION (PM)	L+/R+ RAMP/MEDIAN	ORIENTATION	AREA SQFT	TYPE/LEGEND	REMARKS
KLAMATH RIVER BRIDGE					
R4.49	R+	FNBT	33	Type V Arrow	NB LANE
R4.49	R+	FSBT	33	Type V Arrow	SB LANE
R4.55	L+	FSBT	33	Type V Arrow	SB ONRAMP
101/169 SEPARATION					
R5.30	R+	FNBT	33	Type V Arrow	NB LANE
R5.33	R+	FNBT	33	Type V Arrow	NB LANE
R5.33	R+	FNBT	42	Type III Arrow (R+)	R+ TURN TO EHLERS WAY
R5.34	R+	FWBT	40	LIMIT LINE	EHLERS WAY
R5.34	R+	FWBT	44	STOP (2 Each)	EHLERS WAY
R5.35	L+	FSBT	33	Type V Arrow	SB LANE
R5.35	L+	FSBT	42	Type III Arrow (L+)	L+ TURN LANE TO EHLERS WAY
R5.37	L+	FSBT	33	Type V Arrow	SB LANE
T5.99	MEDIAN	FNBT	42	Type III Arrow (L+)	KLAMATH
T5.99	MEDIAN	FSBT	42	Type III Arrow (L+)	KLAMATH
EQUATION = 6.05/7.14					
7.17	MEDIAN	FNBT	42	Type III Arrow (L+)	KLAMATH
7.17	MEDIAN	FSBT	42	Type III Arrow (L+)	KLAMATH
7.25	MEDIAN	FNBT	42	Type III Arrow (L+)	KLAMATH
7.25	MEDIAN	FSBT	42	Type III Arrow (L+)	KLAMATH
7.31	MEDIAN	FNBT	42	Type III Arrow (L+)	KLAMATH
7.31	MEDIAN	FSBT	42	Type III Arrow (L+)	KLAMATH
7.41	MEDIAN	FNBT	42	Type III Arrow (L+)	KLAMATH
7.41	MEDIAN	FSBT	42	Type III Arrow (L+)	KLAMATH
7.51	MEDIAN	FNBT	42	Type III Arrow (L+)	KLAMATH
7.51	MEDIAN	FSBT	42	Type III Arrow (L+)	KLAMATH
7.61	R+	FWBT	44	LIMIT LINE	McMILLAN Rd
7.61	R+	FWBT	44	STOP (2 Each)	McMILLAN Rd
7.61	L+	FSBT	42	Type III Arrow (L+)	L+ TURN TO McMILLAN Rd
MINOT CREEK BRIDGE					
8.17	L+	FNBT	42	Type III Arrow (L+)	L+ TURN TO MINOT CREEK Rd
8.17	R+	FEBT	35	LIMIT LINE	MINOT CREEK Rd
8.18	R+	FEBT	22	STOP	McMILLAN Rd
8.18	R+	FWBT	22	STOP	McMILLAN Rd
8.18	R+	FWBT	35	LIMIT LINE	MINOT CREEK Rd
8.19	L+	FSBT	42	Type III Arrow (L+)	L+ TURN TO MINOT CREEK Rd
8.31	R+	FWBT	30	LIMIT LINE	PEINE STREET
8.31	R+	FWBT	22	STOP	PEINE STREET
PANTHER CREEK BRIDGE					
HUNTER CREEK BRIDGE					
8.63	R+	FWBT	30	LIMIT LINE	OLD HUNTER CREEK Rd
8.63	R+	FWBT	22	STOP	OLD HUNTER CREEK Rd
8.82	R+	FWBT	30	LIMIT LINE	NEW HUNTER CREEK Rd
8.53	R+	FWBT	22	STOP	NEW HUNTER CREEK Rd
HIGH PRAIRIE CREEK BRIDGE					
		TOTAL	1387		

PAVEMENT DELINEATION QUANTITIES

NO SCALE

PDQ-2

REVISED BY | DATE REVISED
BIJAN SAMRAD | TOM PHILLIPS
CALCULATED-DESIGNED BY | CHECKED BY
FUNCTIONAL SUPERVISOR: L.R. ASHLEY

STATE OF CALIFORNIA - DEPARTMENT OF TRANSPORTATION
Caltrans® **DESIGN**

P:\PROJ\01\0B080\drafting\01_00020445\0100020445nc002.dgn

LAST REVISION 05-12-14 | DATE PLOTTED => 02-JUN-2014 | TIME PLOTTED => 09:18

Dist	COUNTY	ROUTE	POST MILES TOTAL PROJECT	SHEET No.	TOTAL SHEETS
01	DN	101	R4.4/9.4	26	47

REGISTERED CIVIL ENGINEER 5-12-14 DATE

May 12, 2014
PLANS APPROVAL DATE

REGISTERED PROFESSIONAL ENGINEER Thomas Jon Phillips No. 64633 Exp. 6/30/15 CIVIL STATE OF CALIFORNIA

THE STATE OF CALIFORNIA OR ITS OFFICERS OR AGENTS SHALL NOT BE RESPONSIBLE FOR THE ACCURACY OR COMPLETENESS OF SCANNED COPIES OF THIS PLAN SHEET.

TEMPORARY TRAFFIC STRIPE (PAINT)

LOCATION (PM) FROM	LOCATION (PM) TO	DETAIL NUMBER	4" YELLOW (BROKEN) (19)	4" YELLOW (SOLID) (22)	4" YELLOW (SOLID) (29)	4" YELLOW (SOLID/BROKEN) (32)	4" WHITE (SOLID) (27B)	4" WHITE (BROKEN 17-7) (8)	8" WHITE (SOLID) (38/36/36A)	REMARKS
			LF							
R4.038	R4.424	-								KLAMATH RIVER BRIDGE
R4.42	R4.638	22 & 27B		1151.0			2302.1			ROUTE 101
R4.47	R4.525	27B & 36					290.4		580.8	NB OFF RAMP
R4.5	R4.52	8						116.2		SB
R4.518	R4.551	27B & 36A					174.2		348.5	SB ON RAMP
R4.638	R4.67	22 & 27B		169.0			169.0			101/169
R4.67	8.14	22 & 27B		18,321.6			36,643.2			ROUTE 101
R4.785	R4.816	36A							327.4	NB ON RAMP
R4.816	R4.851	8						184.8		NB
R4.802	R4.851	27B & 38					258.7		517.4	SB OFF RAMP
R5.28	R5.33	38							369.6	RIGHT TURN POCKET
R5.26	R5.33	29			739.2					NO TURN ISLAND
R5.32	R5.324	22 & 38		21.1					21.1	EHLERS Ave
R5.345	R5.38	29							184.8	LEFT TURN POCKET
R5.39	R5.46	29			739.2					NO TURN ISLAND
T5.82	T5.92	29			1056.0					TURN ISLAND
T5.92	T6.05	32				1372.8				TURN ISLAND
7.14	7.6	32				4857.6				6.05/7.14
7.608	7.614	22 & 38		31.7					31.7	McMILLAN ROAD
7.61	7.626	38							84.5	LEFT TURN POCKET
7.624	7.67	29			485.8					NO TURN ISLAND
8.08	8.135	29			580.8					NO TURN ISLAND
8.139	8.148	22 & 27B		47.5			47.5			MINOT CREEK
8.153	8.178	38							132.0	LEFT TURN POCKET
8.173	8.179	22 & 38		31.7					31.7	REQUA ROAD
8.179	8.182	22 & 38		15.8					15.8	MINOT CREEK ROAD
8.185	8.195	22 & 38							52.8	LEFT TURN POCKET
8.198	8.27	29			760.3					NO TURN ISLAND
8.3	8.33	22,8 & 38		158.4				158.4	26.4	PRIVATE ROAD
8.152	8.34	22 & 27B		992.6			992.6			ROUTE 101
8.339	8.365	22 & 27B		137.3			137.3			PANTHER CREEK
8.37	8.506	22		718.1						ROUTE 101
8.506	8.526	22 & 27B		105.6			105.6			HUNTER CREEK
8.615	8.647	22,8 & 38		169.0				169.0	28.2	PRIVATE ROAD
8.817	8.823	22,8 & 38		31.7					31.7	HUNTER CREEK ROAD
8.53	9.32	22		4171.2						ROUTE 101
9.32	9.392	22	380.2							ROUTE 101
		SUB TOTAL	380.2	26,273.3	4,361.3	6,230.4	41,120.6	628.4	2,784.4	
		TOTAL	37,245.2				41,749.0		2,784.4	
		GRAND TOTAL	81,778.6							

PAVEMENT DELINEATION QUANTITIES

NO SCALE

PDQ-3

REVISED BY	DATE REVISED
BIJAN SAMRAD	TOM PHILLIPS
CALCULATED-DESIGNED BY	CHECKED BY
FUNCTIONAL SUPERVISOR	
L.R. ASHLEY	

STATE OF CALIFORNIA - DEPARTMENT OF TRANSPORTATION
Caltrans®
DESIGN

P:\PROJ\01\0B080\drafting\01_00020445\0100020445nc003.dgn

LAST REVISION 05-12-14 | DATE PLOTTED => 02-JUN-2014 | TIME PLOTTED => 09:18

Dist	COUNTY	ROUTE	POST MILES TOTAL PROJECT	SHEET No.	TOTAL SHEETS
01	DN	101	R4.4/9.4	27	47

REGISTERED CIVIL ENGINEER 5-12-14 DATE

May 12, 2014
PLANS APPROVAL DATE

REGISTERED PROFESSIONAL ENGINEER Thomas Jon Phillips No. 64633 Exp. 6/30/15 CIVIL STATE OF CALIFORNIA

THE STATE OF CALIFORNIA OR ITS OFFICERS OR AGENTS SHALL NOT BE RESPONSIBLE FOR THE ACCURACY OR COMPLETENESS OF SCANNED COPIES OF THIS PLAN SHEET.

TEMPORARY PAVEMENT MARKINGS (PAINT)

LOCATION (PM)	Lt/Rt RAMP/MEDIAN	ORIENTATION	AREA SQFT	TYPE/LEGEND	REMARKS
KLAMATH RIVER BRIDGE					
R4.49	Rt	FNBT	33	Type V Arrow	NB LANE
R4.49	Rt	FSBT	33	Type V Arrow	SB LANE
R4.55	Lt	FSBT	33	Type V Arrow	SB ONRAMP
101/169 SEPARATION					
R5.30	Rt	FNBT	33	Type V Arrow	NB LANE
R5.33	Rt	FNBT	33	Type V Arrow	NB LANE
R5.33	Rt	FNBT	42	Type III Arrow (Rt)	Rt TURN TO EHLERS WAY
R5.34	Rt	FWBT	40	LIMIT LINE	EHLERS WAY
R5.34	Rt	FWBT	44	STOP (2 Each)	EHLERS WAY
R5.35	Lt	FSBT	33	Type V Arrow	SB LANE
R5.35	Lt	FSBT	42	Type III Arrow (Lt)	Lt TURN LANE TO EHLERS WAY
R5.37	Lt	FSBT	33	Type V Arrow	SB LANE
T5.99	MEDIAN	FNBT	42	Type III Arrow (Lt)	KLAMATH
T5.99	MEDIAN	FSBT	42	Type III Arrow (Lt)	KLAMATH
EQUATION = 6.05/7.14					
7.17	MEDIAN	FNBT	42	Type III Arrow (Lt)	KLAMATH
7.17	MEDIAN	FSBT	42	Type III Arrow (Lt)	KLAMATH
7.25	MEDIAN	FNBT	42	Type III Arrow (Lt)	KLAMATH
7.25	MEDIAN	FSBT	42	Type III Arrow (Lt)	KLAMATH
7.31	MEDIAN	FNBT	42	Type III Arrow (Lt)	KLAMATH
7.31	MEDIAN	FSBT	42	Type III Arrow (Lt)	KLAMATH
7.41	MEDIAN	FNBT	42	Type III Arrow (Lt)	KLAMATH
7.41	MEDIAN	FSBT	42	Type III Arrow (Lt)	KLAMATH
7.51	MEDIAN	FNBT	42	Type III Arrow (Lt)	KLAMATH
7.51	MEDIAN	FSBT	42	Type III Arrow (Lt)	KLAMATH
7.61	Rt	FWBT	44	LIMIT LINE	McMILLAN Rd
7.61	Rt	FWBT	44	STOP (2 Each)	McMILLAN Rd
7.61	Lt	FSBT	42	Type III Arrow (Lt)	Lt TURN TO McMILLAN Rd
MINOT CREEK BRIDGE					
8.17	Lt	FNBT	42	Type III Arrow (Lt)	Lt TURN TO MINOT CREEK Rd
8.17	Rt	FEBT	35	LIMIT LINE	MINOT CREEK Rd
8.18	Rt	FEBT	22	STOP	McMILLAN Rd
8.18	Rt	FWBT	22	STOP	McMILLAN Rd
8.18	Rt	FWBT	35	LIMIT LINE	MINOT CREEK Rd
8.19	Lt	FSBT	42	Type III Arrow (Lt)	Lt TURN TO MINOT CREEK Rd
8.31	Rt	FWBT	30	LIMIT LINE	PEINE STREET
8.31	Rt	FWBT	22	STOP	PEINE STREET
PANTHER CREEK BRIDGE					
HUNTER CREEK BRIDGE					
8.63	Rt	FWBT	30	LIMIT LINE	OLD HUNTER CREEK Rd
8.63	Rt	FWBT	22	STOP	OLD HUNTER CREEK Rd
8.82	Rt	FWBT	30	LIMIT LINE	NEW HUNTER CREEK Rd
8.53	Rt	FWBT	22	STOP	NEW HUNTER CREEK Rd
HIGH PRAIRIE CREEK BRIDGE					
		TOTAL	1387		

PAVEMENT DELINEATION QUANTITIES

NO SCALE

PDQ-4

REVISED BY | DATE REVISED
BIJAN SAMRAD | TOM PHILLIPS
CALCULATED-DESIGNED BY | CHECKED BY
FUNCTIONAL SUPERVISOR: L.R. ASHLEY

STATE OF CALIFORNIA - DEPARTMENT OF TRANSPORTATION
Caltrans® **DESIGN**

P:\PROJ\01\0B080\drafting\01_00020445\0100020445nc004.dgn

LAST REVISION 05-12-14 | DATE PLOTTED => 02-JUN-2014 TIME PLOTTED => 09:18

Dist	COUNTY	ROUTE	POST MILES TOTAL PROJECT	SHEET No.	TOTAL SHEETS
01	DN	101	R4.4/9.4	28	47

REGISTERED CIVIL ENGINEER 5-12-14 DATE

May 12, 2014
PLANS APPROVAL DATE

REGISTERED PROFESSIONAL ENGINEER Thomas Jon Phillips No. 64633 Exp. 6/30/15 CIVIL STATE OF CALIFORNIA

THE STATE OF CALIFORNIA OR ITS OFFICERS OR AGENTS SHALL NOT BE RESPONSIBLE FOR THE ACCURACY OR COMPLETENESS OF SCANNED COPIES OF THIS PLAN SHEET.

TRAFFIC STRIPE AND PAVEMENT MARKER QUANTITIES

LOCATION (PM)		DETAIL NUMBER	THERMOPLASTIC TRAFFIC STRIPE							PAVEMENT MARKERS (RETROREFLECTIVE)			REMARKS
			4" YELLOW (BROKEN) (19)	4" YELLOW (SOLID) (22)	4" YELLOW (SOLID) (29)	4" YELLOW (SOLID/BROKEN) (32)	4" WHITE (SOLID) (27B)	4" WHITE (BROKEN 17-7) (8)	8" WHITE (SOLID) (36/36A/38)	TYPE D	TYPE G	TYPE H	
FROM	TO		LF							EA			
R4.038	R4.424	-											KLAMATH RIVER BRIDGE
R4.42	R4.638	22 & 27B		2302.1			2302.1			96			ROUTE 101
R4.47	R4.525	27B & 36					290.4		580.8		24		NB OFF RAMP
R4.5	R4.52	8						82.3					SB
R4.518	R4.551	27B & 36A					174.2		348.5		15		SB ON RAMP
R4.638	R4.67	22 & 27B		337.9			169.0			14			101/169
R4.67	8.14	22 & 27B		36643.2			36643.2			1527			ROUTE 101
R4.785	R4.816	36A							327.4		14		NB ON RAMP
R4.816	R4.851	8						130.9					NB
R4.802	R4.851	27B & 38					258.7		517.4		22		SB OFF RAMP
R5.28	R5.33	38							369.6				RIGHT TURN POCKET
R5.26	R5.33	29			1478.4					31			NO TURN ISLAND
R5.32	R5.324	22 & 38		42.2					21.1	2			EHLERS Ave
R5.345	R5.38	29							184.8		10		LEFT TURN POCKET
R5.39	R5.46	29			1478.4					31			NO TURN ISLAND
T5.82	T5.92	29			2112.0					44			TURN ISLAND
T5.92	T6.05	32				1372.8				57			TURN ISLAND
7.14	7.6	32				4857.6				202			6.05/7.14
7.608	7.614	22 & 38		63.4					31.7	3			McMILLAN ROAD
7.61	7.626	38							84.5				LEFT TURN POCKET
7.624	7.67	29			971.5					20			NO TURN ISLAND
8.08	8.135	29			1161.6					24			NO TURN ISLAND
8.139	8.148	22 & 27B		47.5			47.5			4			MINOT CREEK
8.153	8.178	38							132.0		8		LEFT TURN POCKET
8.173	8.179	22 & 38		63.4					31.7	3			REQUA ROAD
8.179	8.182	22 & 38		31.7					15.8	2			MINOT CREEK ROAD
8.185	8.195	22 & 38							52.8		4		LEFT TURN POCKET
8.198	8.27	29			1520.6					32			NO TURN ISLAND
8.3	8.33	22,8 & 38		39.6				112.2	26.4	13			PRIVATE ROAD
8.152	8.34	22 & 27B		992.6			992.6			83			ROUTE 101
8.339	8.365	22 & 27B		137.3			137.3			11			PANTHER CREEK
8.37	8.506	22		718.1						60			ROUTE 101
8.506	8.526	22 & 27B		105.6			105.6			9			HUNTER CREEK
8.615	8.647	22,8 & 38		56.3				119.7	28.2	14			PRIVATE ROAD
8.817	8.823	22,8 & 38		35.2					31.7	3			HUNTER CREEK ROAD
8.53	9.32	22		4171.2						348			ROUTE 101
9.32	9.392	22	388.1							18		18	ROUTE 101
		SUB TOTAL		45,787.3	8,722.5	6,230.4	41,120.6	445.1	2,784.3	2,651	97	18	
		TOTAL	61,128.3				41,748.9		2,784.3	2,651	97	18	
		GRAND TOTAL	102,877.2						2,784.3	2,766			

PAVEMENT DELINEATION QUANTITIES

NO SCALE

PDQ-5

REVISED BY | DATE REVISED
BIJAN SAMRAD | TOM PHILLIPS
CALCULATED-DESIGNED BY | CHECKED BY
FUNCTIONAL SUPERVISOR | L.R. ASHLEY

STATE OF CALIFORNIA - DEPARTMENT OF TRANSPORTATION
Caltrans®
DESIGN

P:\PROJ\01\0B080\drafting\01_00020445\0100020445nc005.dgn

LAST REVISION 05-12-14 | DATE PLOTTED => 02-JUN-2014 | TIME PLOTTED => 09:18

Dist	COUNTY	ROUTE	POST MILES TOTAL PROJECT	SHEET No.	TOTAL SHEETS
01	DN	101	R4.4/9.4	29	47

REGISTERED CIVIL ENGINEER 5-12-14 DATE

May 12, 2014
PLANS APPROVAL DATE

REGISTERED PROFESSIONAL ENGINEER Thomas Jon Phillips No. 64633 Exp. 6/30/15 CIVIL STATE OF CALIFORNIA

THE STATE OF CALIFORNIA OR ITS OFFICERS OR AGENTS SHALL NOT BE RESPONSIBLE FOR THE ACCURACY OR COMPLETENESS OF SCANNED COPIES OF THIS PLAN SHEET.

LEGEND:

AEM = AERIAL ENFORCEMENT MARKINGS

THERMOPLASTIC PAVEMENT MARKINGS

LOCATION (PM)	L+/R+ RAMP/MEDIAN	ORIENTATION	AREA SQFT	TYPE/LEGEND	REMARKS
KLAMATH RIVER BRIDGE					
R4.49	R+	FNBT	33	Type V Arrow	NB LANE
R4.49	R+	FSBT	33	Type V Arrow	SB LANE
R4.50	R+	NB	6.0	12" WHITE STRIPE	AEM, SEE SHEET C-1 FOR DETAILS
R4.55	L+	FSBT	33	Type V Arrow	SB ONRAMP
R5.00	R+	NB	6.0	12" WHITE STRIPE	AEM, SEE SHEET C-1 FOR DETAILS
101/169 SEPARATION					
R5.30	R+	FNBT	33	Type V Arrow	NB LANE
R5.33	R+	FNBT	33	Type V Arrow	NB LANE
R5.33	R+	FNBT	42	Type III Arrow (R+)	R+ TURN TO EHLERS WAY
R5.34	R+	FWBT	40	LIMIT LINE	EHLERS WAY
R5.34	R+	FWBT	44	STOP (2 Each)	EHLERS WAY
R5.35	L+	FSBT	33	Type V Arrow	SB LANE
R5.35	L+	FSBT	42	Type III Arrow (L+)	L+ TURN LANE TO EHLERS WAY
R5.37	L+	FSBT	33	Type V Arrow	SB LANE
T5.99	MEDIAN	FNBT	42	Type III Arrow (L+)	KLAMATH
T5.99	MEDIAN	FSBT	42	Type III Arrow (L+)	KLAMATH
EQUATION = 6.05/7.14					
7.17	MEDIAN	FNBT	42	Type III Arrow (L+)	KLAMATH
7.17	MEDIAN	FSBT	42	Type III Arrow (L+)	KLAMATH
7.25	MEDIAN	FNBT	42	Type III Arrow (L+)	KLAMATH
7.25	MEDIAN	FSBT	42	Type III Arrow (L+)	KLAMATH
7.31	MEDIAN	FNBT	42	Type III Arrow (L+)	KLAMATH
7.31	MEDIAN	FSBT	42	Type III Arrow (L+)	KLAMATH
7.41	MEDIAN	FNBT	42	Type III Arrow (L+)	KLAMATH
7.41	MEDIAN	FSBT	42	Type III Arrow (L+)	KLAMATH
7.51	MEDIAN	FNBT	42	Type III Arrow (L+)	KLAMATH
7.51	MEDIAN	FSBT	42	Type III Arrow (L+)	KLAMATH
7.61	R+	FWBT	44	LIMIT LINE	McMILLAN Rd
7.61	R+	FWBT	44	STOP (2 Each)	McMILLAN Rd
7.61	L+	FSBT	42	Type III Arrow (L+)	L+ TURN TO McMILLAN Rd
MINOT CREEK BRIDGE					
8.17	L+	FNBT	42	Type III Arrow (L+)	L+ TURN TO MINOT CREEK Rd
8.17	R+	FEBT	35	LIMIT LINE	MINOT CREEK Rd
8.18	R+	FEBT	22	STOP	McMILLAN Rd
8.18	R+	FWBT	22	STOP	McMILLAN Rd
8.18	R+	FWBT	35	LIMIT LINE	MINOT CREEK Rd
8.19	L+	FSBT	42	Type III Arrow (L+)	L+ TURN TO MINOT CREEK Rd
8.31	R+	FWBT	30	LIMIT LINE	PEINE STREET
8.31	R+	FWBT	22	STOP	PEINE STREET
PANTHER CREEK BRIDGE					
HUNTER CREEK BRIDGE					
8.63	R+	FWBT	30	LIMIT LINE	OLD HUNTER CREEK Rd
8.63	R+	FWBT	22	STOP	OLD HUNTER CREEK Rd
8.82	R+	FWBT	30	LIMIT LINE	NEW HUNTER CREEK Rd
8.53	R+	FWBT	22	STOP	NEW HUNTER CREEK Rd
HIGH PRAIRIE CREEK BRIDGE					
		TOTAL	1399		

RUMBLE STRIP QUANTITIES

LOCATION (PM) FROM	TO	CENTER LINE RUMBLE STRIP (SINUSOIDAL) STATION	COMMENTS
R4.038	R4.424		SKIP KLAMATH RIVER BRIDGE
R4.42	R4.64	11.6	ROUTE 101
R4.641	R4.67		SKIP 101/169 SEPARATION
R4.673	R5.31	33.6	SKIP EHLER ROAD (PM R5.33/R5.345)
R5.33	7.75		SKIP RESIDENTIAL AREA (-22.2 STATIONS)
R5.75	5.90	7.9	ROUTE 101
T5.9	7.60		SKIP TURN POCKET ISLAND (-31.7 STATIONS)
7.63	8.14	26.9	SKIP MINOT CREEK BRIDGE (PM 8.139/8.148)
8.139	8.148		SKIP MINOT CREEK BRIDGE
8.16	8.19		SKIP MINOT CREEK ROAD
8.19	8.29	5.3	SKIP PEINE STREET (PM 8.31/8.32)
8.32	8.34	1.1	SKIP PANTHER CREEK BRIDGE (PM 8.345/8.36)
8.339	8.365		SKIP PANTHER CREEK BRIDGE
8.37	8.505	7.1	SKIP HUNTER CREEK BRIDGE (PM 8.506/8.526)
8.506	8.526		SKIP HUNTER CREEK BRIDGE
8.535	8.61	4.0	SKIP OLD HUNTER CREEK ROAD (PM 8.61/8.65)
8.65	8.80	7.9	SKIP NEW HUNTER CREEK ROAD (PM 8.81/8.83)
8.835	9.22	20.3	SKIP HIGH PRAIRIE TRAILER PARK ENTRANCE (PM 9.26/9.29)
9.295	9.392		SKIP RESIDENTIAL AREA (9.23/9.34)
9.392	9.409		SKIP HIGH PRAIRIE CREEK BRIDGE
TOTAL		126	

PAVEMENT DELINEATION QUANTITIES

NO SCALE

PDQ-6

REVISED BY | DATE REVISED
BIJAN SAMRAD | TOM PHILLIPS
CALCULATED-DESIGNED BY | CHECKED BY
FUNCTIONAL SUPERVISOR: L.R. ASHLEY

STATE OF CALIFORNIA - DEPARTMENT OF TRANSPORTATION
Caltrans® DESIGN

P:\PROJ\01\08080\drafting\01_00020445\0100020445nc006.dgn

LAST REVISION 05-12-14 | DATE PLOTTED => 02-JUN-2014 | TIME PLOTTED => 09:18

Dist	COUNTY	ROUTE	POST MILES TOTAL PROJECT	SHEET No.	TOTAL SHEETS
01	DN	101	R4.4/9.4	30	47

REGISTERED CIVIL ENGINEER 5-12-14 DATE

May 12, 2014
PLANS APPROVAL DATE

REGISTERED PROFESSIONAL ENGINEER Thomas Jon Phillips No. 64633 Exp. 6/30/15 CIVIL STATE OF CALIFORNIA

THE STATE OF CALIFORNIA OR ITS OFFICERS OR AGENTS SHALL NOT BE RESPONSIBLE FOR THE ACCURACY OR COMPLETENESS OF SCANNED COPIES OF THIS PLAN SHEET.

ROADSIDE SIGNS

LOCATION (PM)	L†/R†	SIGN CODE	SIGN MESSAGE	PANEL SIZE	PANEL AREA	INSTALL ROADSIDE SIGN PANEL ON EXISTING POST	(N) REMOVE PANEL	BACKGROUND		LEGEND		PROTECTIVE OVERLAY		FURNISH SIGNLE SHEET ALUMINUM SIGN (UNFRAMED)		REMARKS
								SHEETING COLOR	RETROREFLECTIVE ASTM TYPE	COLOR	RETROREFLECTIVE ASTM TYPE	STANDARD	PREMIUM	0.063"	0.080"	
				INCHES	SQFT	EA								SQFT		
R4.85	R† - FNBT	R48(CA)	SPEED ENFORCED BY RADAR	36 x 48	12	1	1	WHITE	III	BLACK	N/A		X		12	REMOVE EXISTING R48
T5.86	R† - FNBT	R3-9b	TWO WAY LEFT TURN ONLY	24 x 36	6	1	1	WHITE	III	BLACK	N/A		X	6		
7.60	R† - FSBT	R3-9b	TWO WAY LEFT TURN ONLY	24 x 36	6	1	1	WHITE	III	BLACK	N/A		X	6		REMOVE EXISTING R67 (CA)
					TOTAL	3	3							12	12	REMOVE EXISTING R67 (CA)

(N) - NOT A SEPARATE PAY ITEM, FOR INFORMATION ONLY

NO SCALE

SIGN QUANTITIES
SQ-1

REVISED BY | DATE REVISED
BIJAN SAMRAD | TOM PHILLIPS
CALCULATED-DESIGNED BY | CHECKED BY
FUNCTIONAL SUPERVISOR: L.R. ASHLEY

STATE OF CALIFORNIA - DEPARTMENT OF TRANSPORTATION
Caltrans® DESIGN

P:\PROJ\01\0B080\drafting\01_00020445\0100020445oc001.dgn

LAST REVISION 05-12-14 | DATE PLOTTED => 02-JUN-2014 | TIME PLOTTED => 09:18

ROADWAY QUANTITIES

LOCATION (PM) FROM	LOCATION (PM) TO	DIRECTION/ SIDE	(N) AVERAGE WIDTH	(N) LENGTH	REMOVE BASE AND SURFACING	RUBBERIZED HOT MIX ASPHALT GAP GRADED	RUBBERIZED HOT MIX ASPHALT OPEN GRADED	TACK COAT GAP GRADED	TACK COAT OPEN GRADED	SHOULDER BACKING	DIKE TRANSISTION HMA (TYPE A)	DIKE TRANSISTION PLACE HMA Misc AREA	COLD PLANE ASPHALT CONCRETE PAVEMENT	REMOVE ASPHALT CONCRETE DIKE	REMOVE DOWNDRAIN	REMARKS
			LF		CY	TON						SQYD		LF	EA	
R4.42	R4.63	NB & SB	34			850.70	466.40	0.38	0.50							
R4.42	R4.44	NB & SB	40	100									444.4			
R4.47	R4.52	R†								1.99	0.15	1.17		262.0		ROUTE 101 NB OFFRAMP
R4.47	R4.55	L†								3.19	0.15	1.17		414.0	1	ROUTE 101 SB ONRAMP
R4.52	R4.64	NB/R†								4.78				600.0	1	ROUTE 101 NB MAINLINE
R4.55	R4.64	SB/R†								3.59	0.15	1.17		462.0	1	ROUTE 101 SB MAINLINE
R4.62	R4.64	NB & SB	41	100									455.5			101/169 SEPARATION APPROACH
R4.628	R4.635	NB			7.2											
R4.629	R4.636	SB			8.2											
R4.674	R4.698	NB			10.5											
R4.710	R4.720	SB			6.5											
R4.710	R4.720	SB			5.5											
R4.67	R4.68	NB & SB	42	100									466.6			101/169 SEPARATION DEPARTURE
R4.67	R4.69	NB/R†								0.80				88.0	1	ROUTE 101 NB MAINLINE
R4.67	R4.80	SB	3	686						5.18						
R4.67	R8.13	NB & SB	38			7549.40	4138.90	6.22	8.29							
R4.69	R4.77	NB		422						3.19						
R4.81	R5.95	SB		6051						45.67						
R4.79	R5.33	NB		2878						21.72						
R4.79	R4.81	SB/R†								1.16				153.0	1	ROUTE 101 SB OFFRAMP, HOPPOW CREEK
R5.34		NB/R†	47	25									130.5			EHLERS WAY ROAD
R5.34	R6.05	NB		3696						27.89						
T6.00	T6.05	SB		264						1.99						
7.14	7.15	SB		69						0.52						
7.18	7.37	NB		977						7.37						
7.38	7.40	NB		85						0.64						
7.40	7.60	NB		1003						7.57						
7.62	8.14	NB		2746						20.72						
7.18	7.25	SB		370						2.79						
7.26	7.27	SB		79						0.60						
7.28	7.31	SB		116						0.88						
7.38	7.40	SB		85						0.64						
7.41	7.42	SB		79						0.60						
7.43	7.46	SB		137						1.04						
7.47	8.14	SB		3538						26.70						
7.61		NB/R†	50	25									138.9			McMILLAN ROAD
8.13	8.14	NB & SB	51	100									566.6			
8.145	8.155	NB & SB			8.8											MINOT CREEK BRIDGE, REMOVE AC
8.515	8.535	NB & SB			10.8											HUNTER CREEK BRIDGE, REMOVE AC
8.15	8.17	NB & SB		106						1.60						0.80 EACH NB/SB
8.16	8.17	NB & SB	58	100									644.4			
8.17		NB/R†	29	25									80.5			MINOT CREEK ROAD
		SB/R†	32	25									88.9			
8.15	8.33	NB & SB				717.57	393.41	0.32	0.43							
8.18	8.34	SB		818						6.18						
8.18	8.31	NB		660						4.98						
8.31		NB/R†	26	25									72.2			PEINE STREET
8.32	8.34	NB		106						0.80						
8.33	8.35	NB & SB	36	100									400.0			
8.37	8.39	NB & SB	36	100									400.0			
8.37	8.50	NB & SB				386.82	212.07	0.23	0.31							
8.37	8.51	SB		739						5.58						
8.37	8.51	NB		739						5.58						
8.50	8.52	NB & SB	33	100									366.6			
8.53	8.55	NB & SB	30	100									333.3			
8.53	8.56	SB		158						1.20						
8.53	9.40					2147.74	1177.49	1.55	2.06							
8.57	9.40	SB		4382						33.07						
8.54	8.62	NB		422						3.19						
8.62		NB/R†	36	25									100.0			OLD HUNTER CREEK ROAD
8.64	8.82	NB		924						6.97						
8.82	9.23	NB		2191						16.54						
8.90		NB/R†	41	25									113.9			NEW HUNTER CREEK ROAD
9.24	9.27	NB		185						1.39						
9.25		NB/R†	32	25									88.9			HIGH PRAIRIE TRAILER PARK
9.28	9.395	NB		607						4.58						
9.38	9.395	NB & SB	43	100									477.7			
				SUB TOTAL				8.70	11.60			3.51				
				TOTAL	57.5	11,652.21	6,388.27	20.3		282.84	0.45		5,368.91	1,979.0	5	

Dist	COUNTY	ROUTE	POST MILES TOTAL PROJECT	SHEET No.	TOTAL SHEETS
01	DN	101	R4.4/9.4	31	47

REGISTERED CIVIL ENGINEER 5-12-14 DATE

May 12, 2014
PLANS APPROVAL DATE

REGISTERED PROFESSIONAL ENGINEER Thomas Jon Phillips No. 64633 Exp. 6/30/15 CIVIL STATE OF CALIFORNIA

THE STATE OF CALIFORNIA OR ITS OFFICERS OR AGENTS SHALL NOT BE RESPONSIBLE FOR THE ACCURACY OR COMPLETENESS OF SCANNED COPIES OF THIS PLAN SHEET.

SUMMARY OF QUANTITIES

NO SCALE

Q-1

REVISED BY | DATE REVISED
BIJAN SAMRAD | TOM PHILLIPS
CALCULATED-DESIGNED BY | CHECKED BY
FUNCTIONAL SUPERVISOR
L.R. ASHLEY

STATE OF CALIFORNIA - DEPARTMENT OF TRANSPORTATION
Caltrans
DESIGN

P:\PROJ\01\0B080\drafting\01_00020445\0100020445pa001.dgn

LAST REVISION | DATE PLOTTED => 02-JUN-2014 | TIME PLOTTED => 09:18
05-12-14

Dist	COUNTY	ROUTE	POST MILES TOTAL PROJECT	SHEET No.	TOTAL SHEETS
01	DN	101	R4.4/9.4	32	47

REGISTERED CIVIL ENGINEER 5-12-14 DATE

May 12, 2014
PLANS APPROVAL DATE

REGISTERED PROFESSIONAL ENGINEER Thomas Jon Phillips No. 64633 Exp. 6/30/15 CIVIL STATE OF CALIFORNIA

THE STATE OF CALIFORNIA OR ITS OFFICERS OR AGENTS SHALL NOT BE RESPONSIBLE FOR THE ACCURACY OR COMPLETENESS OF SCANNED COPIES OF THIS PLAN SHEET.

LEGEND:

ATS - ATTACHED TO STRUCTURE
CAA - CABLE ANCHOR ASSEMBLY
AIL - ALTERNATIVE IN-LINE TERMINAL SYSTEM
AF - ALTERNATIVE FLARED TERMINAL SYSTEM
WB - TRANSITION RAILING (TYPE WB)

NC - NO CHANGE
OSD - OVERSIDE DRAIN
BPE - BURIED POST END ANCHOR
APP - APPROACH
DEP - DEPARTURE

METAL BEAM GUARD RAILING

LOCATION / DESCRIPTION: POST MILE FROM	TO	DIRECTION	APPROACH/ DEPARTURE	EXISTING LEADER	EXISTING TRAILER	PROPOSED LEADER	PROPOSED TRAILER	EXISTING LENGTH	REMOVE MBGR	(N) PROPOSED TOTAL LENGTH	MBGR (WOOD POST)	MBGR (7' WOOD POST)	TRANSITION RAILING (TYPE WB)	END CAP (TYPE TC)	TERMINAL SYSTEMS: ALTERNATIVE FLARED TERMINAL SYSTEM	ALTERNATIVE IN-LINE TERMINAL SYSTEM	(N) BURIED POST END ANCHOR	GUARD RAILING DELINEATOR	* ROLLED EROSION CONTROL PRODUCT (BLANKET)	TREATED WOOD WASTE	STRUCTURE NAME (SEE STRUCTURE PLANS)	COMMENTS
								LF					EA						SQFT	LB		
4.606	4.637	NB-RT	APR	SRT	ATS	AIL	WB	50	50	150.0		87.5	1	1		1		8		1411	101/169 SEPARATION Bridge #01-0026	Remove Existing OSD at PM 4.539 SB Onramp, 4.609 SB, 4.634 NB & 4.693 SB
4.673	4.685	NB-RT	DEP	SRT	ATS	AIL	WB	50	50	62.5			1	1		1		3		1411		
4.628	4.638	SB-RT	APR	SRT	ATS	AIL	WB	50	50	62.5			1	1		1		3		1411		
4.677	4.699	SB-RT	DEP	SRT	ATS	AF	WB	139	139	112.5	50		1	1	1			6		2382		
4.762	4.776	SB-RT	APR	SRT	ATS	AF	WB	62.5	62.5	62.5		62.5	1	1	1			3		1549	101 OFFRAMP-HOPPPW CREEK Bridge #01-0026k	Remove Existing OSD at PM 4.766 Rt
4.761	4.775	SB-LT	APR	SRT	ATS	AF	WB	62.5	62.5	62.5			1	1	1			3		1549		
4.811	4.823	NB-RT	APR	CAA	ATS	AF	WB	50	50	62.5			1	1	1			3		1411	101 ONRAMP-HOPPPW CREEK Bridge #01-0026F	
9.387	9.397	NB-RT	APR	BPE	ATS	NC	WB	50	50	56.3	31.3		1	1			1	3	384	1411	HIGH PRAIRIE CREEK Bridge #01-0004	
9.387	9.398	SB-RT	DEP	SRT	ATS	AF	WB	62.5	62.5	62.5			1	1	1			3		1549		
							TOTAL SHEET	Q-2	576.5	693.8	81.3	150	9	9	5	3	1	35	384	14084		

(N) - NOT A SEPARETE PAY ITEM, FOR INFORMATION ONLY

(*) - TYPE A

SUMMARY OF QUANTITIES
Q-2

NO SCALE

REVISED BY | DATE REVISED
BIJAN SAMRAD | TOM PHILLIPS
CALCULATED-DESIGNED BY | CHECKED BY
FUNCTIONAL SUPERVISOR: L.R. ASHLEY

STATE OF CALIFORNIA - DEPARTMENT OF TRANSPORTATION
Caltrans
DESIGN

P:\PROJ\01\0B080\drafting\01_00020445\0100020445pa002.dgn

LAST REVISION 05-12-14 | DATE PLOTTED => 02-JUN-2014 | TIME PLOTTED => 09:18

M

Maint	MAINTENANCE
Max	MAXIMUM
MB	METAL BEAM
MBB	METAL BEAM BARRIER
MBGR	METAL BEAM GUARD RAILING
Med	MEDIAN
MGS	MIDWEST GUARDRAIL SYSTEM
MH	MANHOLE
Min	MINIMUM
Misc	MISCELLANEOUS
Misc I & S	MISCELLANEOUS IRON AND STEEL
Mkr	MARKER
Mod	MODIFIED, MODIFY
Mon	MONUMENT
MP	METAL PLATE
MPGR	METAL PLATE GUARD RAILING
MR	MOVEMENT RATING
MSE	MECHANICALLY STABILIZED EMBANKMENT
Mt	MOUNTAIN, MOUNT
Mtl	MATERIAL
MVP	MAINTENANCE VEHICLE PULLOUT

N

N	NORTH
NB	NORTHBOUND
No.	NUMBER (MUST HAVE PERIOD)
Nos.	NUMBERS (MUST HAVE PERIOD)
NPS	NOMINAL PIPE SIZE
NS	NEAR SIDE
NSP	NEW STANDARD PLAN
NTS	NOT TO SCALE

O

Oblr	OBLITERATE
OC	OVERCROSSING
OD	OUTSIDE DIAMETER
OF	OUTSIDE FACE
OG	ORIGINAL GROUND
OGAC	OPEN GRADED ASPHALT CONCRETE
OGFC	OPEN GRADED FRICTION COURSE
OH	OVERHEAD
OHWM	ORDINARY HIGH WATER MARK
O-O	OUT TO OUT
Opp	OPPOSITE
OSD	OVERSIDE DRAIN

P

P	PAGE
PAP	PERFORATED ALUMINUM PIPE
PB	PULL BOX
PC	POINT OF CURVATURE, PRECAST
PCC	POINT OF COMPOUND CURVE, PORTLAND CEMENT CONCRETE
PCMS	PORTABLE CHANGEABLE MESSAGE SIGN
PCP	PERFORATED CONCRETE PIPE, PRESTRESSED CONCRETE PIPE
PCVC	POINT OF COMPOUND VERTICAL CURVE
PEC	PERMIT TO ENTER AND CONSTRUCT
Ped	PEDESTRIAN
Ped OC	PEDESTRIAN OVERCROSSING
Ped UC	PEDESTRIAN UNDERCROSSING
Perm Mtl	PERMEABLE MATERIAL

P continued

PG	PROFILE GRADE
PI	POINT OF INTERSECTION
PJP	PARTIAL JOINT PENETRATION
Pkwy	PARKWAY
ℙ,PL	PLATE
P/L	PROPERTY LINE
PM	POST MILE, TIME FROM NOON TO MIDNIGHT
PN	PAVING NOTCH
POC	POINT OF HORIZONTAL CURVE
POT	POINT OF TANGENT
POVC	POINT OF VERTICAL CURVE
PP	PIPE PILE, PLASTIC PIPE, POWER POLE
PPL	PREFORMED PERMEABLE LINER
PPP	PERFORATED PLASTIC PIPE
PRC	POINT OF REVERSE CURVE
PRF	PAVEMENT REINFORCING FABRIC
PRVC	POINT OF REVERSE VERTICAL CURVE
PS&E	PLANS, SPECIFICATIONS AND ESTIMATES
PS, P/S	PRESTRESSED
PSP	PERFORATED STEEL PIPE
PT	POINT OF TANGENCY
PVC	POLYVINYL CHLORIDE
Pvmt	PAVEMENT

Q

Qty	QUANTITY

R

R	RADIUS
R & D	REMOVE AND DISPOSE
R & S	REMOVE AND SALVAGE
R/C	RATE OF CHANGE
RCA	REINFORCED CONCRETE ARCH
RCB	REINFORCED CONCRETE BOX
RCP	REINFORCED CONCRETE PIPE
RCPA	REINFORCED CONCRETE PIPE ARCH
Rd	ROAD
Reinf	REINFORCED, REINFORCEMENT, REINFORCING
Rel	RELOCATE
Repl	REPLACEMENT
Ret	RETAINING
Rev	REVISED, REVISION
Rdwy	ROADWAY
RHMA	RUBBERIZED HOT MIX ASPHALT
Riv	RIVER
RM	ROAD-MIXED
RP	RADIUS POINT, REFERENCE POINT
RR	RAILROAD
RSP	ROCK SLOPE PROTECTION, REVISED STANDARD PLAN
Rt	RIGHT
Rte	ROUTE
RW	REDWOOD, RETAINING WALL
R/W	RIGHT OF WAY
Rwy	RAILWAY

S

S	SOUTH, SUPPLEMENT
SAE	STRUCTURE APPROACH EMBANKMENT
Salv	SALVAGE
SAPP	STRUCTURAL ALUMINUM PLATE PIPE
SB	SOUTHBOUND
SC	SAND CUSHION
SCSP	SLOTTED CORRUGATED STEEL PIPE
SD	STORM DRAIN
Sec	SECOND, SECTION
Sep	SEPARATION
SG	SUBGRADE
Shld	SHOULDER
Sht	SHEET
Sim	SIMILAR
₤	STATION LINE
SM	SELECTED MATERIAL
Spec	SPECIAL, SPECIFICATIONS
SPP	SLOTTED PLASTIC PIPE
SS	SLOPE STAKE
SSBM	STRAP AND SADDLE BRACKET METHOD
SSD	STRUCTURAL SECTION DRAIN
SSPA	STRUCTURAL STEEL PLATE ARCH
SSPP	STRUCTURAL STEEL PLATE PIPE
SSPPA	STRUCTURAL STEEL PLATE PIPE ARCH
SSRP	STEEL SPIRAL RIB PIPE
St	STREET
Sta	STATION
STBB	SINGLE THRIE BEAM BARRIER
Std	STANDARD
Str	STRUCTURE
Surf	SURFACING
SW	SIDEWALK, SOUND WALL
Swr	SEWER
Sym	SYMMETRICAL
S4S	SURFACE 4 SIDES

T

T	SEMI-TANGENT
Tan	TANGENT
TBB	THRIE BEAM BARRIER
Tbr	TIMBER
TC	TOP OF CURB
TCB	TRAFFIC CONTROL BOX
TCE	TEMPORARY CONSTRUCTION EASEMENT
Tel	TELEPHONE
Temp	TEMPORARY
TG	TOP OF GRADE
Tot	TOTAL
TP	TELEPHONE POLE
TPB	TREATED PERMEABLE BASE
TPM	TREATED PERMEABLE MATERIAL
Trans	TRANSITION

T continued

TS	TRANSVERSE, TRAFFIC SIGNAL, TUBULAR STEEL
Typ	TYPICAL

U

UC	UNDERCROSSING
UD	UNDERDRAIN
UG	UNDERGROUND
UON	UNLESS OTHERWISE NOTED
UP	UNDERPASS

V

V	VALVE, DESIGN SPEED
Var	VARIABLE, VARIES
VC	VERTICAL CURVE
VCP	VITRIFIED CLAY PIPE
Vert	VERTICAL
Via	VIADUCT
Vol	VOLUME

W

W	WEST, WIDTH
WB	WESTBOUND
WH	WEEP HOLE
WM	WIRE MESH
WS	WATER SURFACE
WSP	WELDED STEEL PIPE
Wt	WEIGHT
WV	WATER VALVE
WW	WINGWALL
WWLOL	WINGWALL LAYOUT LINE

X

X Sec	CROSS SECTION
Xing	CROSSING

Y

Yr	YEAR
Yrs	YEARS

Dist	COUNTY	ROUTE	POST MILES TOTAL PROJECT	SHEET No.	TOTAL SHEETS
01	DN	101	R4.4/9.4	33	47

Grace M. Tsushima
REGISTERED CIVIL ENGINEER

July 19, 2013
PLANS APPROVAL DATE

REGISTERED PROFESSIONAL ENGINEER
Grace M. Tsushima
No. C49814
Exp. 9-30-14
CIVIL
STATE OF CALIFORNIA

THE STATE OF CALIFORNIA OR ITS OFFICERS OR AGENTS SHALL NOT BE RESPONSIBLE FOR THE ACCURACY OR COMPLETENESS OF SCANNED COPIES OF THIS PLAN SHEET.

TO ACCOMPANY PLANS DATED 05-12-14

UNIT OF MEASUREMENT SYMBOLS:

Some of the symbols used in the project plan quantity tables and in the Bid Item List are:

TABLE A

SYMBOL USED	DEFINITIONS
ACRE	ACRE
CF	CUBIC FOOT
CY	CUBIC YARD
EA	EACH
GAL	GALLON
LB	POUND
LF	LINEAR FOOT
SQFT	SQUARE FOOT
SQYD	SQUARE YARD
STA	100 FEET
TAB	TABLET
TON	2,000 POUNDS

Some of the symbols used in the plans other than in the project plan quantity tables are:

TABLE B

SYMBOL USED	DEFINITIONS
ksi	KIPS PER SQUARE INCH
ksf	KIPS PER SQUARE FOOT
psi	POUNDS PER SQUARE INCH
psf	POUNDS PER SQUARE FOOT
lb/ft^3, pcf	POUNDS PER CUBIC FOOT
tsf	TONS PER SQUARE FOOT
mph, MPH *	MILES PER HOUR
ø	NOMINAL DIAMETER
oz	OUNCE
lb	POUND
kip	1,000 POUNDS
cal	CALORIE
ft	FOOT OR FEET
gal	GALLON

* For use on a sign panel only

STATE OF CALIFORNIA
DEPARTMENT OF TRANSPORTATION

ABBREVIATIONS (SHEET 2 OF 2)

NO SCALE

RSP A10B DATED JULY 19, 2013 SUPERSEDES STANDARD PLAN A10B DATED MAY 20, 2011 - PAGE 2 OF THE STANDARD PLANS BOOK DATED 2010.

REVISED STANDARD PLAN RSP A10B

2010 REVISED STANDARD PLAN RSP A10B

P:\PROJ\01\0B080\drafting\01_00020445\0100020445vs001.dgn

6-7-13

Dist	COUNTY	ROUTE	POST MILES TOTAL PROJECT	SHEET No.	TOTAL SHEETS
01	DN	101	R4.4/9.4	34	47

REGISTERED CIVIL ENGINEER

July 19, 2013
PLANS APPROVAL DATE

REGISTERED PROFESSIONAL ENGINEER Roberta L. McLaughlin No. C40375 Exp. 3-31-15 CIVIL STATE OF CALIFORNIA

THE STATE OF CALIFORNIA OR ITS OFFICERS OR AGENTS SHALL NOT BE RESPONSIBLE FOR THE ACCURACY OR COMPLETENESS OF SCANNED COPIES OF THIS PLAN SHEET.

TO ACCOMPANY PLANS DATED 05-12-14

EXIT RAMP NEUTRAL AREA (GORE) TREATMENT

DETAIL 36

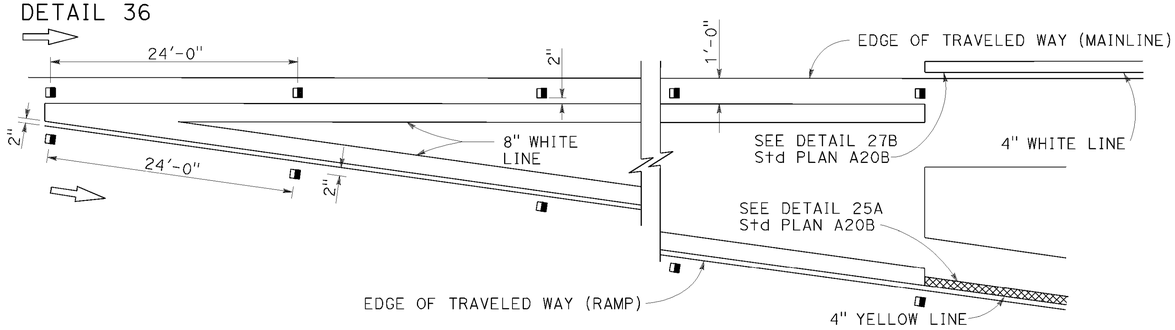

ENTRANCE RAMP NEUTRAL AREA (MERGE) TREATMENT

DETAIL 36A

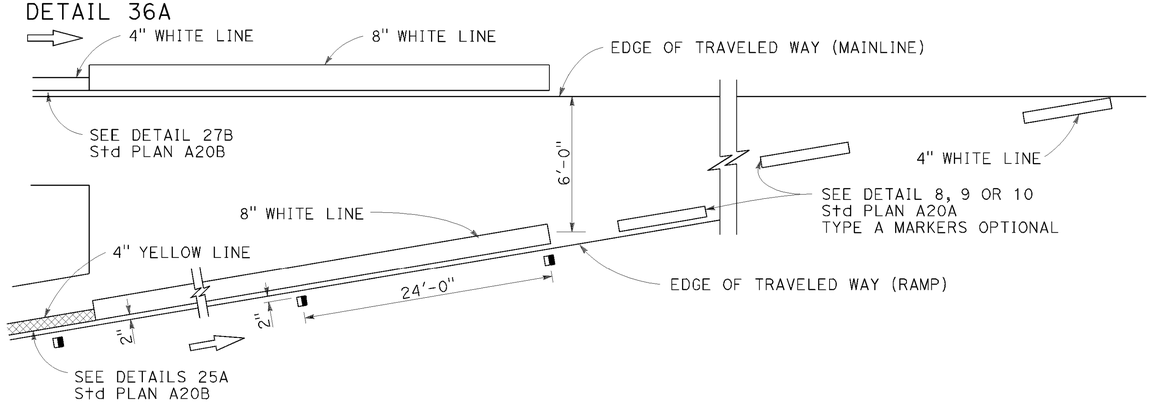

ENTRANCE RAMP NEUTRAL AREA (ACCELERATION LANE) TREATMENT

DETAIL 36B

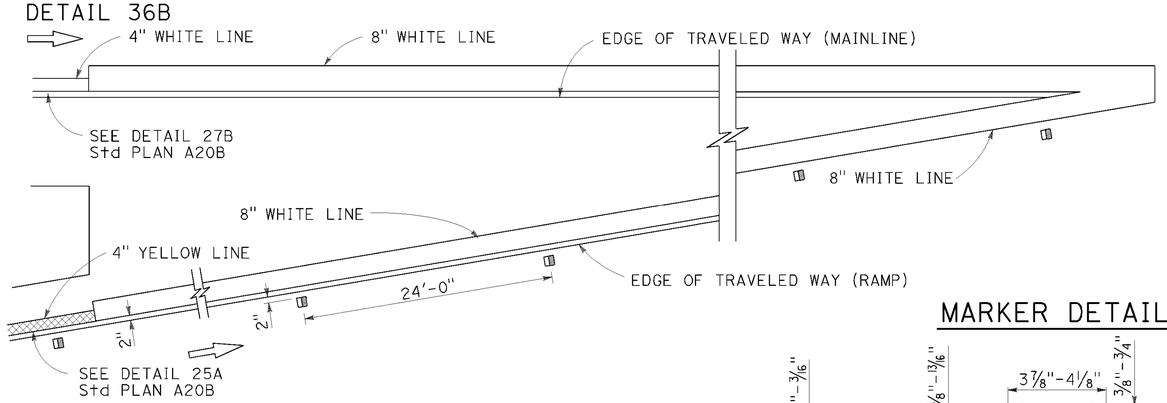

MARKER DETAILS

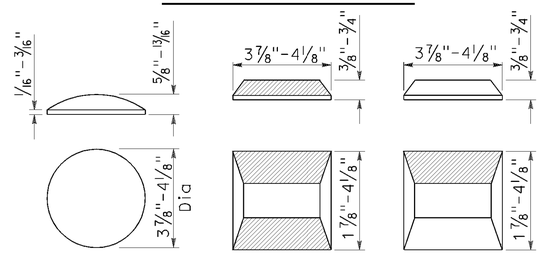

RETROREFLECTIVE FACE

LEGEND:

MARKERS

- TYPE A WHITE NON-REFLECTIVE
- TYPE C RED-CLEAR RETROREFLECTIVE
- TYPE G ONE-WAY CLEAR RETROREFLECTIVE

LANE DROP AT EXIT RAMPS

DETAIL 37

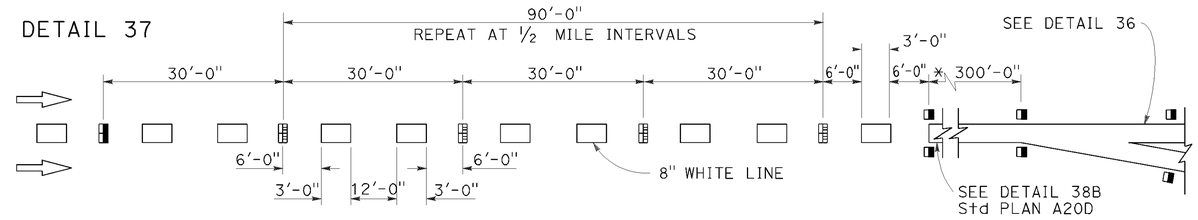

DETAIL 37A

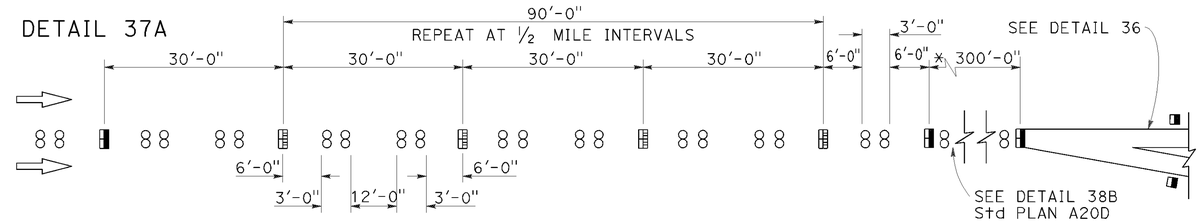

* The solid channelizing line shown may be omitted on short auxiliary lanes where weaving length is critical.

LANE DROP AT INTERSECTIONS

DETAIL 37B

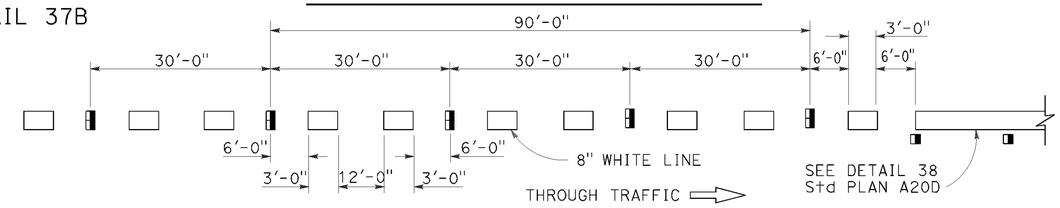

DETAIL 37C

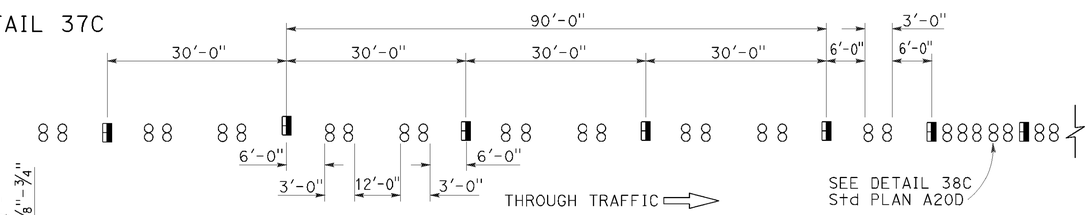

STATE OF CALIFORNIA
DEPARTMENT OF TRANSPORTATION

PAVEMENT MARKERS AND TRAFFIC LINE TYPICAL DETAILS

NO SCALE

RSP A20C DATED JULY 19, 2013 SUPERSEDES STANDARD PLAN A20C DATED MAY 20, 2011 - PAGE 11 OF THE STANDARD PLANS BOOK DATED 2010.

REVISED STANDARD PLAN RSP A20C

2010 REVISED STANDARD PLAN RSP A20C

P:\PROJ\01\0B080\drafting\01_00020445\010002044 5va002.dgn

4-29-13

Dist	COUNTY	ROUTE	POST MILES TOTAL PROJECT	SHEET No.	TOTAL SHEETS
01	DN	101	R4.4/9.4	35	47

REGISTERED CIVIL ENGINEER

April 20, 2012
PLANS APPROVAL DATE

REGISTERED PROFESSIONAL ENGINEER
Roberta L. McLaughlin
No. C40375
Exp. 3-31-13
CIVIL
STATE OF CALIFORNIA

THE STATE OF CALIFORNIA OR ITS OFFICERS OR AGENTS SHALL NOT BE RESPONSIBLE FOR THE ACCURACY OR COMPLETENESS OF SCANNED COPIES OF THIS PLAN SHEET.

TO ACCOMPANY PLANS DATED 05-12-14

2010 REVISED STANDARD PLAN RSP A24A

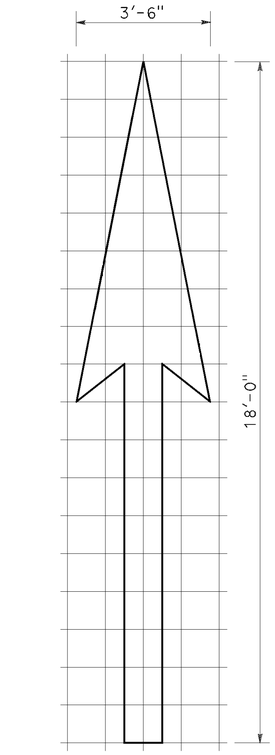

A=25 ft^2

TYPE I 18'-0" ARROW

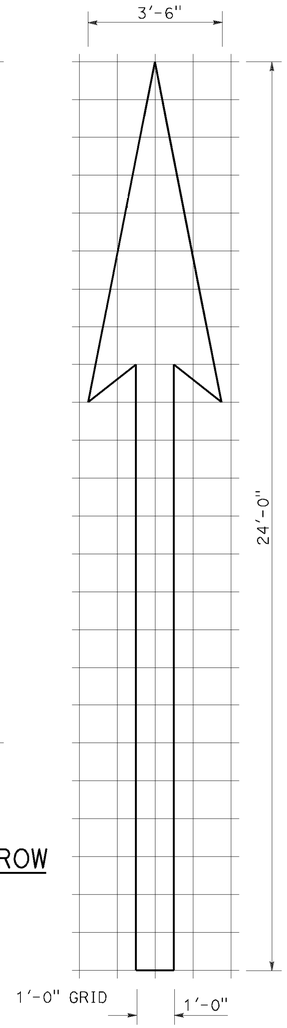

A=31 ft^2

TYPE I 24'-0" ARROW

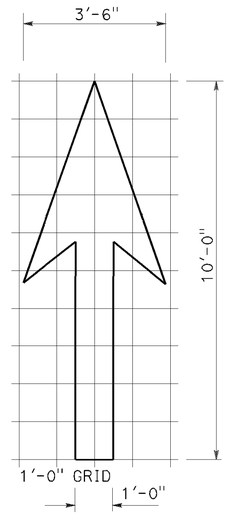

A=14 ft^2

TYPE I 10'-0" ARROW

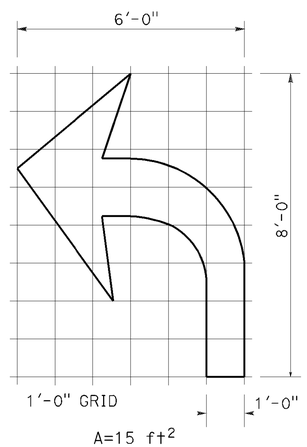

A=15 ft^2

TYPE IV (L) ARROW

(For Type IV (R) arrow, use mirror image)

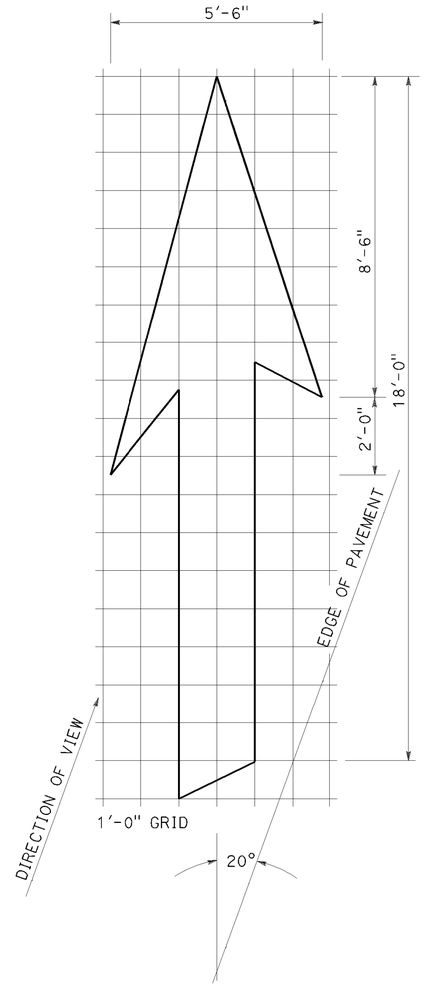

A=42 ft^2

TYPE VI ARROW

Right lane drop arrow
(For left lane, use mirror image)

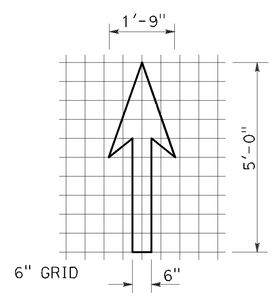

A=3.5 ft^2

BIKE LANE ARROW

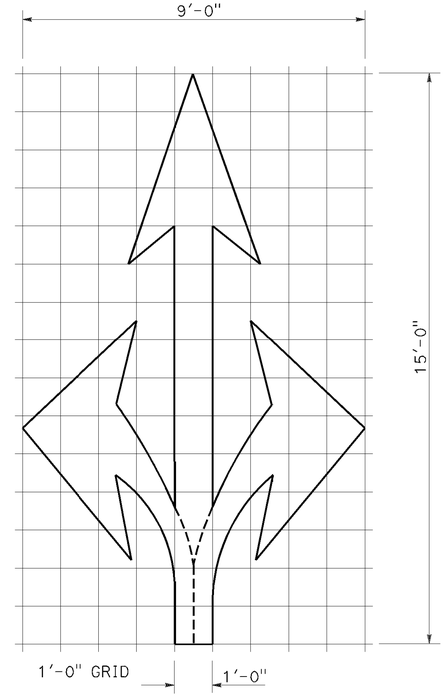

A=36 ft^2

TYPE VIII ARROW

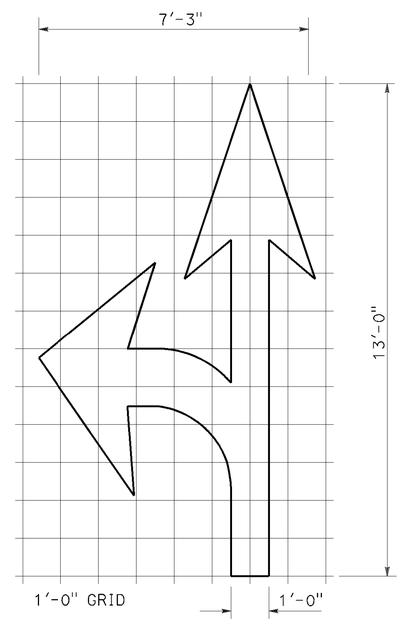

A=27 ft^2

TYPE VII (L) ARROW

(For Type VII (R) arrow, use mirror image)

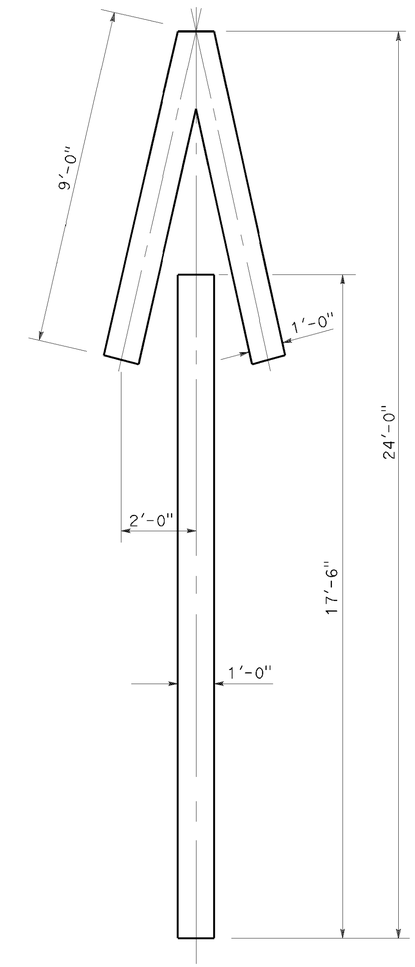

A=33 ft^2

TYPE V ARROW

NOTE:
Minor variations in dimensions may be accepted by the Engineer.

STATE OF CALIFORNIA
DEPARTMENT OF TRANSPORTATION

PAVEMENT MARKINGS ARROWS

NO SCALE

RSP A24A DATED APRIL 20, 2012 SUPERSEDES STANDARD PLAN A24A DATED MAY 20, 2011 - PAGE 13 OF THE STANDARD PLANS BOOK DATED 2010.

REVISED STANDARD PLAN RSP A24A

P:\PROJ\01\0B080\drafting\01_00020445\0100020445va003.dgn

3-14-12

Dist	COUNTY	ROUTE	POST MILES TOTAL PROJECT	SHEET No.	TOTAL SHEETS
01	DN	101	R4.4/9.4	36	47

REGISTERED CIVIL ENGINEER

July 20, 2012
PLANS APPROVAL DATE

REGISTERED PROFESSIONAL ENGINEER
Roberta L. McLaughlin
No. C40375
Exp. 3-31-13
CIVIL
STATE OF CALIFORNIA

THE STATE OF CALIFORNIA OR ITS OFFICERS OR AGENTS SHALL NOT BE RESPONSIBLE FOR THE ACCURACY OR COMPLETENESS OF SCANNED COPIES OF THIS PLAN SHEET.

TO ACCOMPANY PLANS DATED 05-12-14

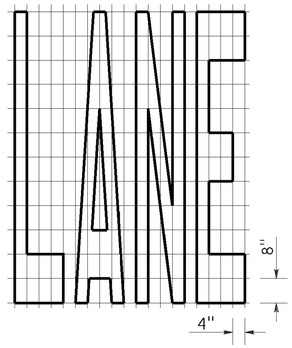

A=24 ft^2

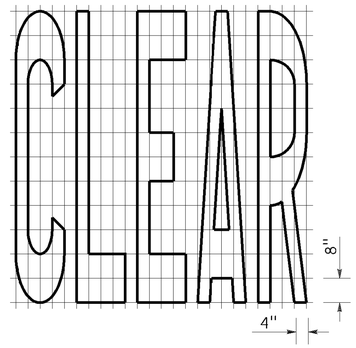

A=27 ft^2

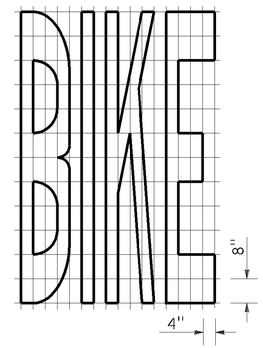

A=21 ft^2

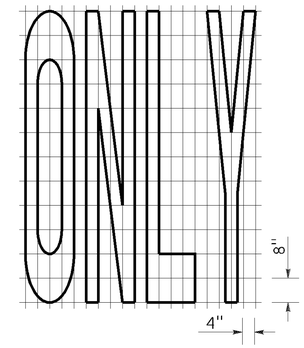

A=22 ft^2

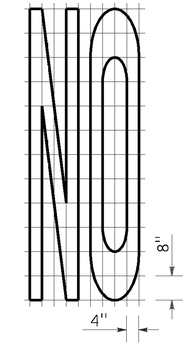

A=14 ft^2

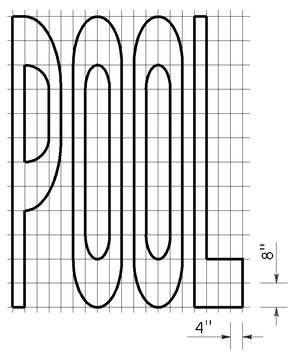

A=23 ft^2

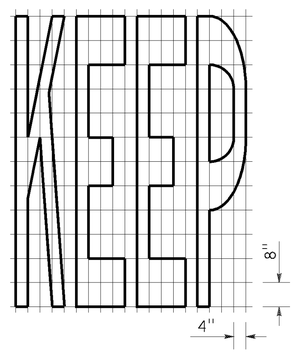

A=24 ft^2

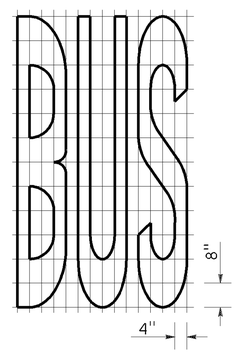

A=20 ft^2

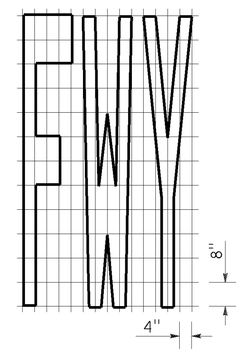

A=16 ft^2

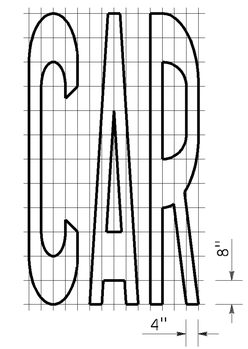

A=17 ft^2

WORD MARKINGS			
ITEM	ft^2	ITEM	ft^2
LANE	24	NO	14
POOL	23	BIKE	21
CAR	17	BUS	20
CLEAR	27	ONLY	22
KEEP	24	FWY	16

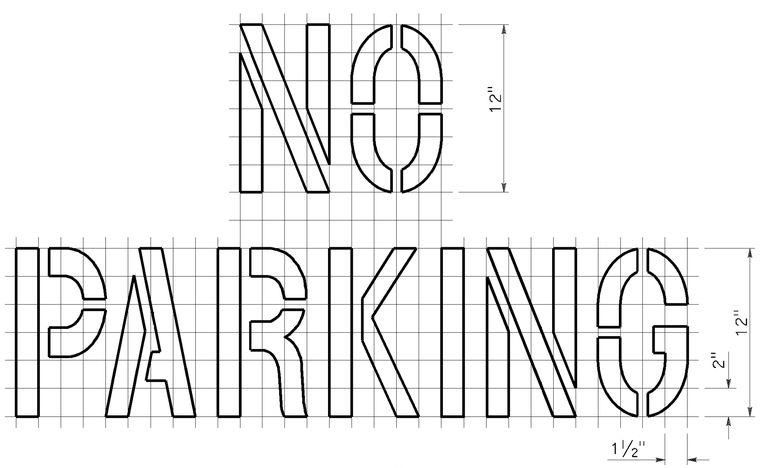

A=2 ft^2
See Notes 6 and 7

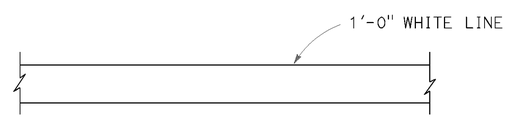

LIMIT LINE (STOP LINE)

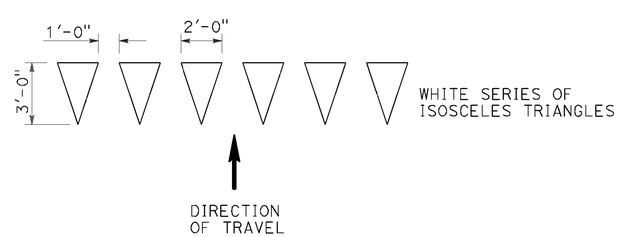

YIELD LINE

NOTES:

1. If a message consists of more than one word, it should read "UP", i.e., the first word should be nearest the driver.
2. The space between words should be at least four times the height of the characters for low speed roads, but not more than ten times the height of the characters. The space may be reduced appropriately where there is limited space because of local conditions.
3. Minor variations in dimensions may be accepted by the Engineer.
4. Portions of a letter, number or symbol may be separated by connecting segments not to exceed 2" in width.
5. The words "NO PARKING" pavement marking is to be used for parking facilities. For typical locations of markings, see Standard Plans A90A and A90B.
6. The words "NO PARKING", shall be painted in white letters no less than 1'-0" high on a contrasting background and located so that it is visible to traffic enforcement officials.

STATE OF CALIFORNIA
DEPARTMENT OF TRANSPORTATION

PAVEMENT MARKINGS WORDS, LIMIT AND YIELD LINES

NO SCALE

RSP A24E DATED JULY 20, 2012 SUPERSEDES STANDARD PLAN A24E
DATED MAY 20, 2011 - PAGE 17 OF THE STANDARD PLANS BOOK DATED 2010.

REVISED STANDARD PLAN RSP A24E

2010 REVISED STANDARD PLAN RSP A24E

P:\PROJ\01\0B080\drafting\01_00020445\0100020445vg004.dgn

6-12-12

DIST	COUNTY	ROUTE	POST MILES TOTAL PROJECT	SHEET No.	TOTAL SHEETS
01	DN	101	R4.4/9.4	37	47

REGISTERED CIVIL ENGINEER

November 15, 2013
PLANS APPROVAL DATE

REGISTERED PROFESSIONAL ENGINEER Cornelis M. Hakim No. C55610 Exp. 12-31-14 CIVIL STATE OF CALIFORNIA

THE STATE OF CALIFORNIA OR ITS OFFICERS OR AGENTS SHALL NOT BE RESPONSIBLE FOR THE ACCURACY OR COMPLETENESS OF SCANNED COPIES OF THIS PLAN SHEET.

TO ACCOMPANY PLANS DATED 05-12-14

2010 REVISED STANDARD PLAN RSP P74

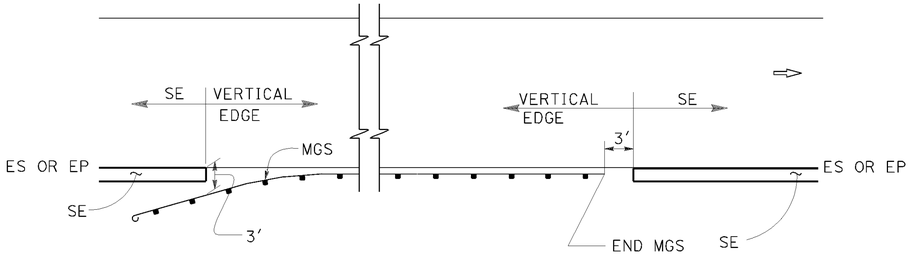

MGS

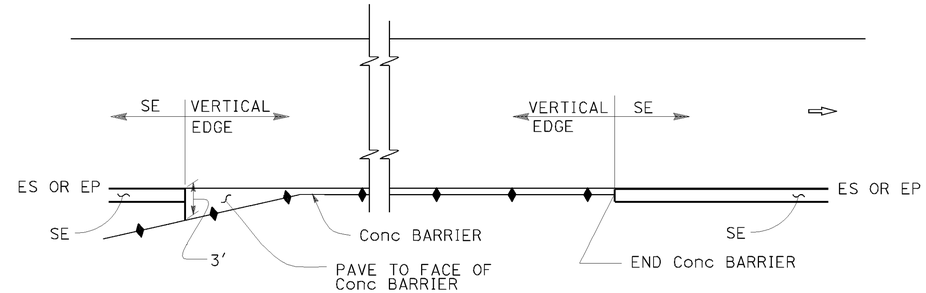

CONCRETE BARRIER

ABBREVIATIONS:

SE SAFETY EDGE

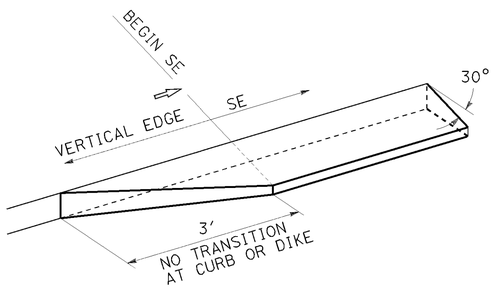

TRANSITION DETAIL FOR CONCRETE ONLY

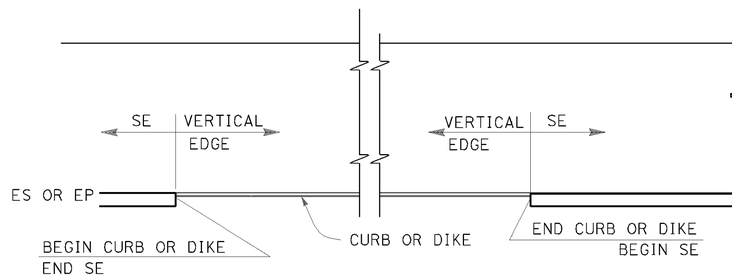

CURB OR DIKE

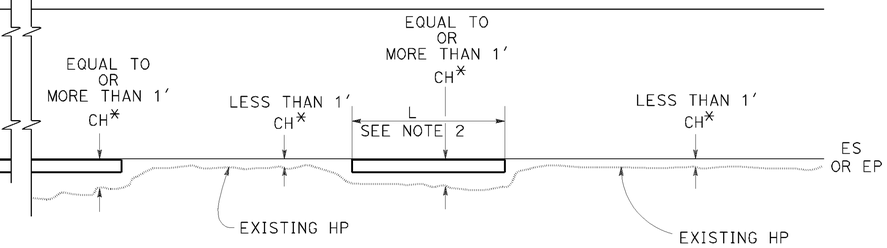

NARROW SIDE SLOPE

* CH = Distance from ES or EP to existing HP.

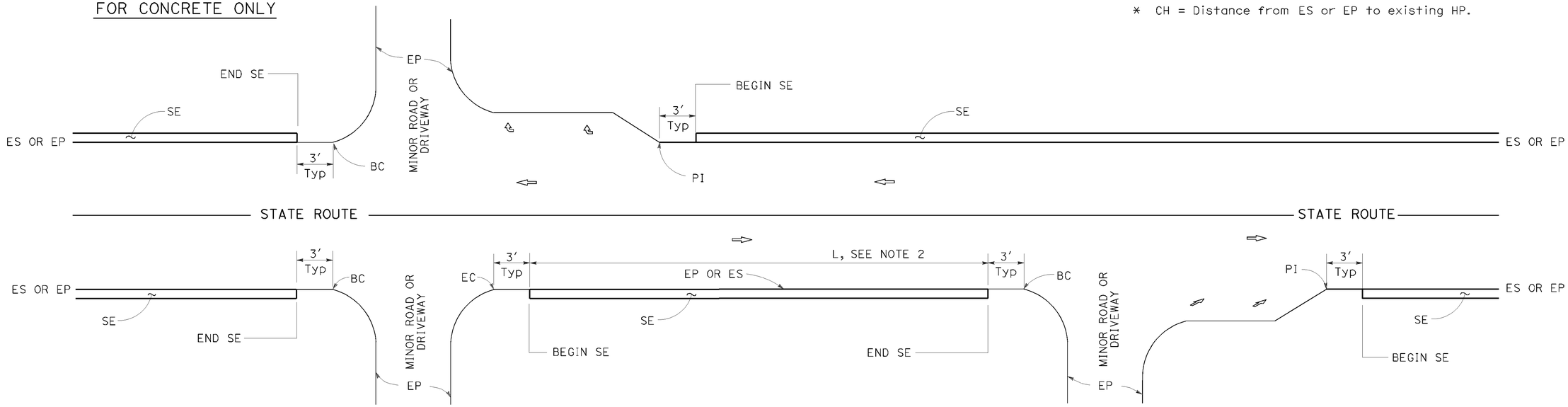

INTERSECTION

DRIVEWAY AND INTERSECTION

MINOR ROADWAY OR DRIVEWAY

NOTES:

1. For details not shown, see Revised Standard Plans RSP P75 and RSP P76.
2. Safety edge is optional when L is less than 30′.

STATE OF CALIFORNIA
DEPARTMENT OF TRANSPORTATION

PAVEMENT EDGE TREATMENTS

NO SCALE

RSP P74 DATED NOVEMBER 15, 2013 SUPERSEDES RSP P74 DATED JANUARY 20, 2012 THAT SUPPLEMENTS THE STANDARD PLANS BOOK DATED 2010.

REVISED STANDARD PLAN RSP P74

P:\PROJ\01\0B080\drafting\01_00020445\0100020445vd005.dgn

10-11-13

DIST	COUNTY	ROUTE	POST MILES TOTAL PROJECT	SHEET No.	TOTAL SHEETS
01	DN	101	R4.4/9.4	38	47

REGISTERED CIVIL ENGINEER

November 15, 2013
PLANS APPROVAL DATE

REGISTERED PROFESSIONAL ENGINEER Cornelis M. Hakim No. C55610 Exp. 12-31-14 CIVIL STATE OF CALIFORNIA

THE STATE OF CALIFORNIA OR ITS OFFICERS OR AGENTS SHALL NOT BE RESPONSIBLE FOR THE ACCURACY OR COMPLETENESS OF SCANNED COPIES OF THIS PLAN SHEET.

TO ACCOMPANY PLANS DATED 05-12-14

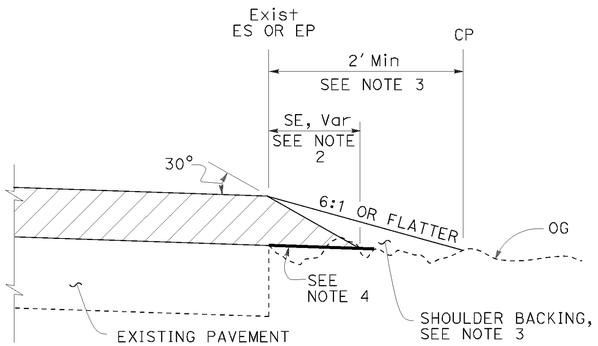

CASE A
Safety Edge

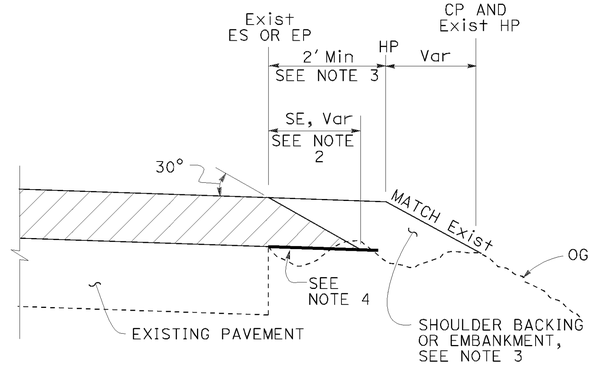

CASE B
Safety Edge

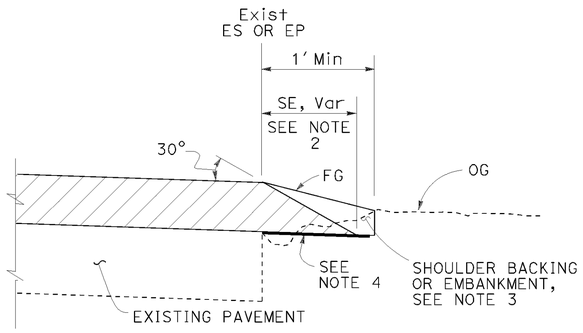

CASE C
Safety Edge

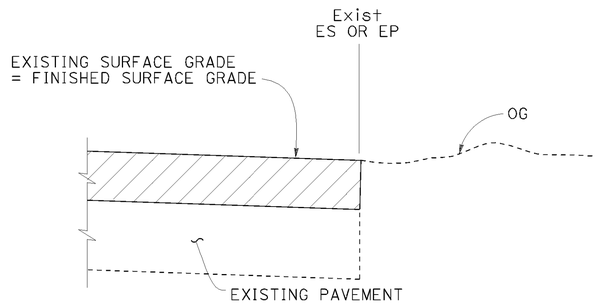

CASE D
Vertical Edge

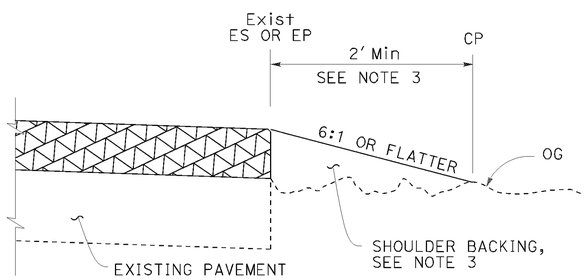

CASE E
Vertical Edge

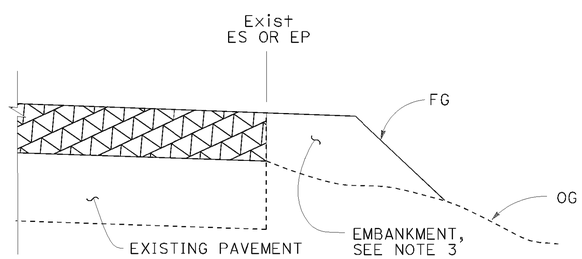

CASE F
Vertical Edge
* See Table A and Revised Std Plan RSP P74

LEGEND:

- HMA OVERLAY
- HMA OR CONCRETE OVERLAY
- CONCRETE OVERLAY

ABBREVIATIONS:

SE SAFETY EDGE
TT TOTAL THICKNESS OF SE

TABLE A
EDGE TREATMENT FOR VARIOUS OVERLAY THICKNESS AND CONDITIONS

	OVERLAY THICKNESS	
FIELD CONDITION	LESS THAN 0.15'	0.15' OR MORE
Exist SLOPE 6:1 OR FLATTER	CASE E	CASE A
Exist SLOPE 3:1 TO 6:1	CASE E	CASE B
Exist SLOPE STEEPER THAN 3:1	CASE F	CASE F
CUT SECTION (REPLACE, COLD PLANE, MILL PAVEMENT)	CASE D	CASE C

ADDITIONAL HMA OR CONCRETE QUANTITIES FOR SE/SIDE/MILE

TYPICAL CROSS SECTION	TT	TOTAL ADDITIONAL MATERIAL FOR SE/SIDE/MILE		
		HMA (TON)	CONCRETE (CY)*	CONCRETE (CY)**
TT	0.15'	NA	NA	NA
	0.20'	13.7	NA	NA
	0.30'	30.9	NA	NA
	0.40'	54.9	NA	NA
	0.45'	69.4	NA	NA
TT 0.43'	0.50'	84.2	NA	NA
	0.60'	113.9	NA	NA
	0.70'	143.6	70.9	94.2
	0.80'	173.3	85.6	112.2
	0.90'	203.0	100.3	130.2
	1.00'	232.7	114.9	148.2
	1.10'	262.4	129.6	166.2
	1.20'	292.1	144.3	184.2

* For Detail "A"
** For Optional Detail "A"

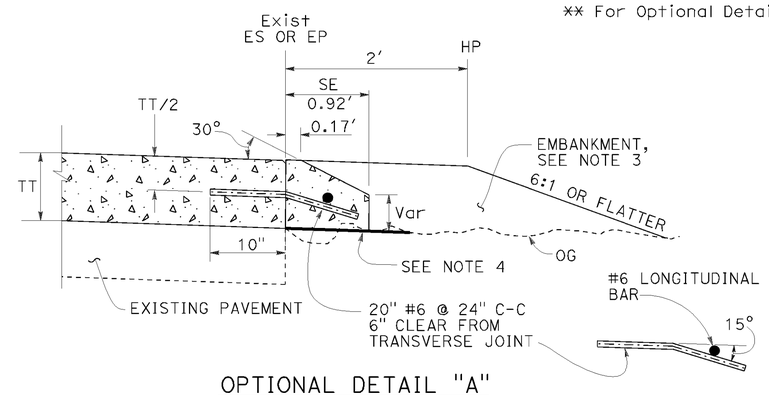

OPTIONAL DETAIL "A"
For concrete overlay
See Note 5

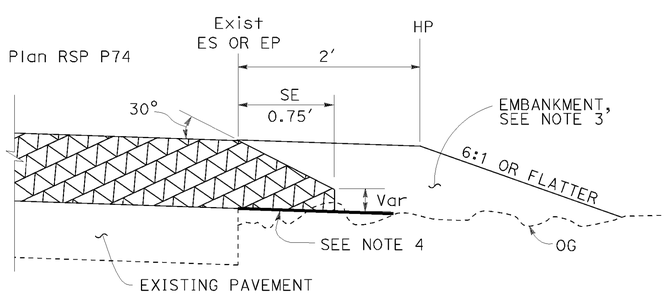

DETAIL "A"
For HMA overlay thickness more than 0.43' or concrete overlay

NOTES:

1. For limits of safety edge and vertical edge treatments, see Revised Standard Plan RSP P74.
2. Details shown for HMA overlay thickness less than 0.43'. See Detail "A" for HMA overlay thickness more than 0.43' or concrete overlay.
3. For locations and limits of shoulder backing or embankment see project plans.
4. Grade existing ground to place safety edge. 1' minimum width
5. Safety edge transverse joint must match overlay transverse joint. End of #6 longitudinal bar must be 2" ±½" clear from transverse joint.
6. Safety edge is not needed in the area of MGS, barrier, right turn lane and acceleration lane. See Revised Standard Plan RSP P74.

STATE OF CALIFORNIA
DEPARTMENT OF TRANSPORTATION

PAVEMENT EDGE TREATMENTS-OVERLAYS

NO SCALE

RSP P75 DATED NOVEMBER 15, 2013 SUPERSEDES RSP P75 DATED JANUARY 20, 2012 THAT SUPPLEMENTS THE STANDARD PLANS BOOK DATED 2010.

REVISED STANDARD PLAN RSP P75

2010 REVISED STANDARD PLAN RSP P75

P:\PROJ\01\0B080\drafting\01_00020445\0100020445va006.dgn

10-4-13

Dist	COUNTY	ROUTE	POST MILES TOTAL PROJECT	SHEET No.	TOTAL SHEETS
01	DN	101	R4.4/9.4	39	47

REGISTERED CIVIL ENGINEER

July 19, 2013
PLANS APPROVAL DATE

REGISTERED PROFESSIONAL ENGINEER
Gurinderpal Bhullar
No. C48815
Exp. 9-30-14
CIVIL
STATE OF CALIFORNIA

THE STATE OF CALIFORNIA OR ITS OFFICERS OR AGENTS SHALL NOT BE RESPONSIBLE FOR THE ACCURACY OR COMPLETENESS OF SCANNED COPIES OF THIS PLAN SHEET.

TO ACCOMPANY PLANS DATED 05-12-14

2010 REVISED STANDARD PLAN RSP T9

TABLE 1

TAPER LENGTH CRITERIA AND CHANNELIZING DEVICE SPACING

SPEED (S)	MINIMUM TAPER LENGTH * FOR WIDTH OF OFFSET 12 FEET (W)				MAXIMUM CHANNELIZING DEVICE SPACING		
					X	Y	Z **
	TANGENT 2L	MERGING L	SHIFTING L/2	SHOULDER L/3	TAPER	TANGENT	CONFLICT
mph	ft	ft	ft	ft	ft	ft	ft
20	160	80	40	27	20	40	10
25	250	125	63	42	25	50	12
30	360	180	90	60	30	60	15
35	490	245	123	82	35	70	17
40	640	320	160	107	40	80	20
45	1080	540	270	180	45	90	22
50	1200	600	300	200	50	100	25
55	1320	660	330	220	55	110	27
60	1440	720	360	240	60	120	30
65	1560	780	390	260	65	130	32
70	1680	840	420	280	70	140	35

* - For other offsets, use the following merging taper length formula for L:
For speed of 40 mph or less, $L = WS^2/60$
For speed of 45 mph or more, $L = WS$

Where: L = Taper length in feet
W = Width of offset in feet
S = Posted speed limit, off-peak 85th-percentile speed prior to work starting, or the anticipated operating speed in mph

** - Use for taper and tangent sections where there are no pavement markings or where there is a conflict between existing pavement markings and channelizers (CA).

TABLE 2

LONGITUDINAL BUFFER SPACE AND FLAGGER STATION SPACING

SPEED *	Min D **	DOWNGRADE Min D ***		
		-3%	-6%	-9%
mph	ft	ft	ft	ft
20	115	116	120	126
25	155	158	165	173
30	200	205	215	227
35	250	257	271	287
40	305	315	333	354
45	360	378	400	427
50	425	446	474	507
55	495	520	553	593
60	570	598	638	686
65	645	682	728	785
70	730	771	825	891

* - Speed is posted speed limit, off-peak 85th-percentile speed prior to work starting, or the anticipated operating speed in mph

** - Longitudinal buffer space or flagger station spacing

*** - Use on sustained downgrade steeper than -3 percent and longer than 1 mile.

TABLE 3

ADVANCE WARNING SIGN SPACING

ROAD TYPE	DISTANCE BETWEEN SIGNS *		
	A	B	C
	ft	ft	ft
URBAN - 25 mph OR LESS	100	100	100
URBAN - MORE THAN 25 mph TO 40 mph	250	250	250
URBAN - MORE THAN 40 mph	350	350	350
RURAL	500	500	500
EXPRESSWAY / FREEWAY	1000	1500	2640

* - The distances are approximate, are intended for guidance purposes only, and should be applied with engineering judgment. These distances should be adjusted by the Engineer for field conditions, if necessary, by increasing or decreasing the recommmended distances.

STATE OF CALIFORNIA
DEPARTMENT OF TRANSPORTATION

TRAFFIC CONTROL SYSTEM TABLES FOR LANE AND RAMP CLOSURES

NO SCALE

RSP T9 DATED JULY 19, 2013 SUPERSEDES RSP T9 DATED APRIL 19, 2013 THAT SUPPLEMENTS THE STANDARD PLANS BOOK DATED 2010.

REVISED STANDARD PLAN RSP T9

P:\PROJ\01\0B080\drafting\01_00020445\010002044 5vga007.dgn

4-30-13

Dist	COUNTY	ROUTE	POST MILES TOTAL PROJECT	SHEET No.	TOTAL SHEETS
01	DN	101	R4.4/9.4	40	47

REGISTERED CIVIL ENGINEER

April 19, 2013
PLANS APPROVAL DATE

REGISTERED PROFESSIONAL ENGINEER Gurinderpal Bhullar No. C48815 Exp. 9-30-14 CIVIL STATE OF CALIFORNIA

THE STATE OF CALIFORNIA OR ITS OFFICERS OR AGENTS SHALL NOT BE RESPONSIBLE FOR THE ACCURACY OR COMPLETENESS OF SCANNED COPIES OF THIS PLAN SHEET.

TO ACCOMPANY PLANS DATED 05-12-14

NOTES:

See Revised Standard Plan RSP T9 for tables.

Use cone spacing X for taper segment, Y for tangent segment or Z for conflict situations, as approriate, per Table 1, unless X, Y, or Z cone spacing is shown on this sheet.

Unless otherwise specified in the special provisions, all temporary warning signs shall have black legend on fluorescent orange background.

California codes are designated by (CA). Otherwise, Federal (MUTCD) codes are shown.

TYPICAL LANE CLOSURE WITH REVERSIBLE CONTROL

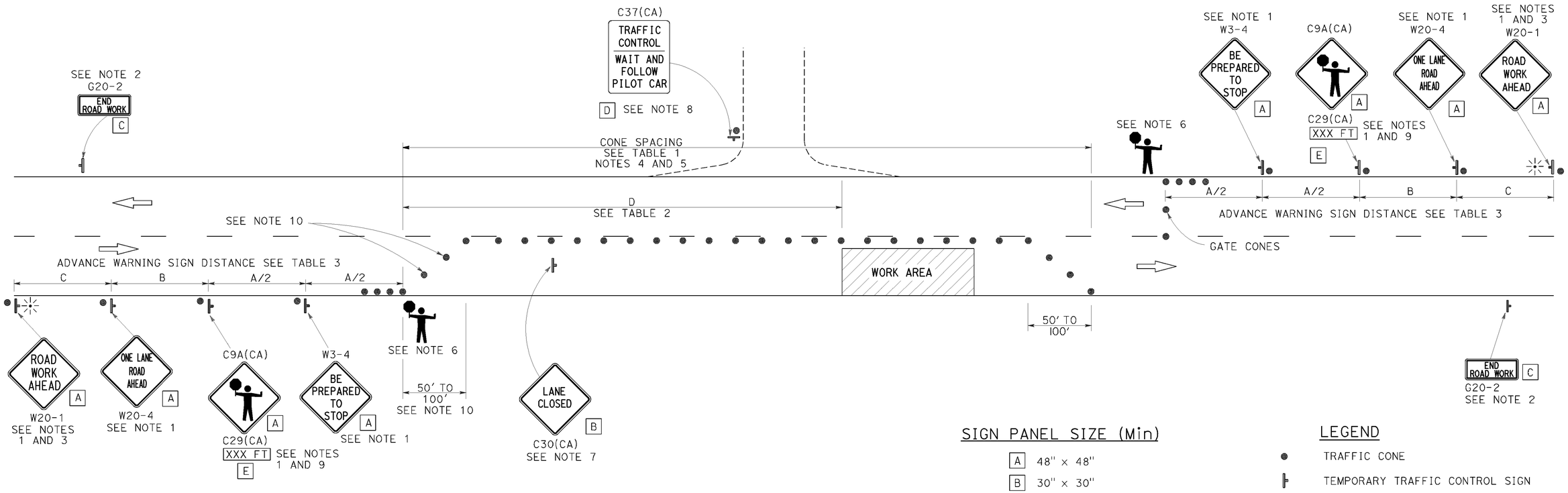

SIGN PANEL SIZE (Min)

A	48" × 48"
B	30" × 30"
C	36" × 18"
D	36" × 42"
E	20" × 7"

LEGEND

- TRAFFIC CONE
- TEMPORARY TRAFFIC CONTROL SIGN
- PORTABLE FLASHING BEACON
- FLAGGER

NOTES:

1. Each advance warning sign in each direction of travel shall be equipped with at least two flags for daytime closure. Each flag shall be at least 16" x 16" in size and shall be orange or fluorescent red-orange in color. Flashing beacons shall be placed at the locations indicated for lane closure during hours of darkness.
2. A G20-2 "END ROAD WORK" sign, as appropriate, shall be placed at the end of the lane control unless the end of work area is obvious, or ends within a larger project's limits.
3. If the W20-1 sign would follow within 2000' of a stationary W20-1 or G20-1 "ROAD WORK NEXT _____ MILES", use a W20-4 sign for the first advance warning sign.
4. All cones used for lane closures during the hours of darkness shall be fitted with retroreflective bands (or sleeves) as specified in the specifications.
5. Portable delineators, placed at one-half the spacing indicated for traffic cones, may be used instead of cones for daytime closures only.
6. Additional advance flaggers may be required. Flagger should stand in a conspicuous place, be visible to approaching traffic as well as approaching vehicles after the first vehicle has stopped. During the hours of darkness, the flagging-station and flagger shall be illuminated and clearly visible to approaching traffic. The illumination footprint of the lighting on the ground shall be at least 20' in diameter. Place a minimum of four cones at 50' intervals in advance of flagger station as shown.
7. Place C30(CA) "LANE CLOSED" sign at 500' to 1000' intervals throughout extended work areas. They are optional if the work area is visible from the flagger station.
8. When a pilot car is used, place a C37(CA) "TRAFFIC CONTROL-WAIT AND FOLLOW PILOT CAR" sign with black legend on white background at all intersections, driveways and alleys without a flagger within traffic control area. Signs shall be clean and visible at all times. Where traffic can not be effectively self-regulated, at least one flagger shall be used at each intersection within traffic control area.
9. An optional C29(CA) sign may be placed below the C9A(CA) sign.
10. Either traffic cones or barricades shall be placed on the taper. Barricades shall be Type I, II, or III.

STATE OF CALIFORNIA
DEPARTMENT OF TRANSPORTATION

TRAFFIC CONTROL SYSTEM FOR LANE CLOSURE ON TWO LANE CONVENTIONAL HIGHWAYS

NO SCALE

RSP T13 DATED APRIL 19, 2013 SUPERSEDES STANDARD PLAN T13 DATED MAY 20, 2011 - PAGE 241 OF THE STANDARD PLANS BOOK DATED 2010.

REVISED STANDARD PLAN RSP T13

2010 REVISED STANDARD PLAN RSP T13

P:\PROJ\01\0B080\drafting\01_00020445\010020445va008.dgn

4-2-13

Dist	COUNTY	ROUTE	POST MILES TOTAL PROJECT	SHEET No.	TOTAL SHEETS
01	DN	101	R4.4/9.4	41	47

REGISTERED CIVIL ENGINEER

April 19, 2013
PLANS APPROVAL DATE

REGISTERED PROFESSIONAL ENGINEER Gurinderpal Bhullar No. C48815 Exp. 9-30-14 CIVIL STATE OF CALIFORNIA

THE STATE OF CALIFORNIA OR ITS OFFICERS OR AGENTS SHALL NOT BE RESPONSIBLE FOR THE ACCURACY OR COMPLETENESS OF SCANNED COPIES OF THIS PLAN SHEET.

TO ACCOMPANY PLANS DATED 05-12-14

TYPICAL RAMP CLOSURES

SIGN PANEL SIZE (Min)

- A 48" x 48"
- B 48" x 30"
- C 36" x 36"
- D 48" x 36"

LEGEND

- TRAFFIC CONE
- TEMPORARY TRAFFIC CONTROL SIGN
- BARRICADES
- PORTABLE FLASHING BEACON

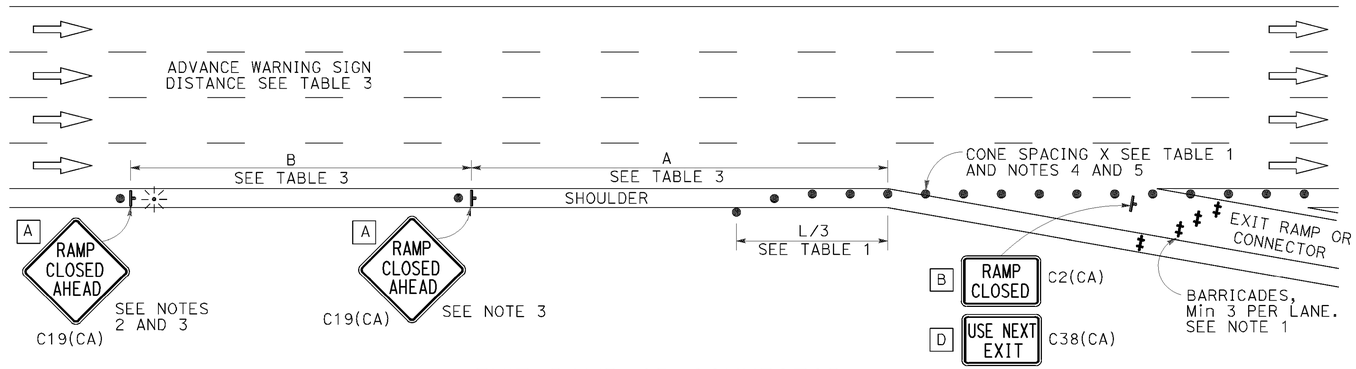

EXIT RAMP OR CONNECTOR

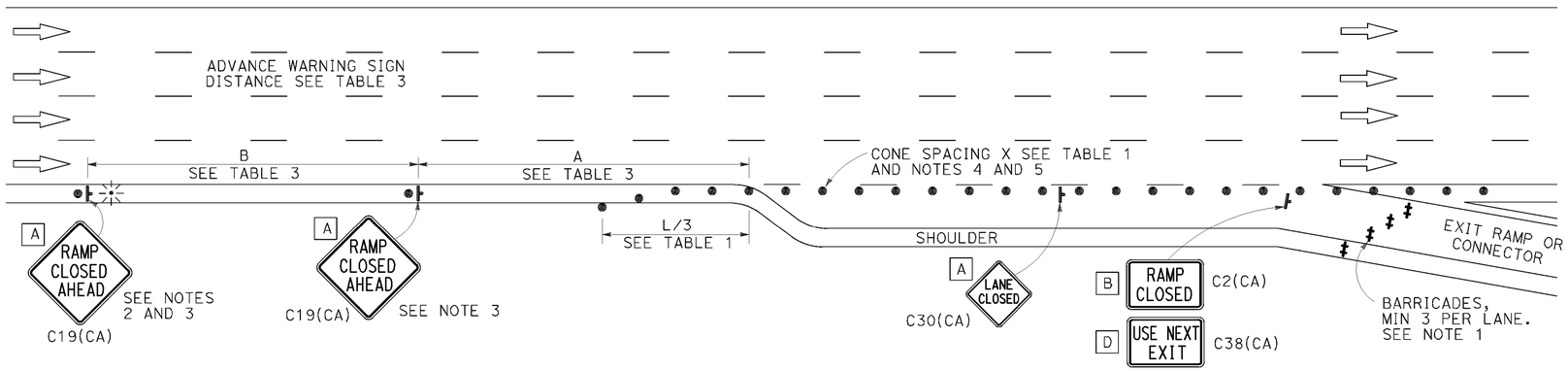

EXIT RAMP OR CONNECTOR WITH ADDITIONAL LANE

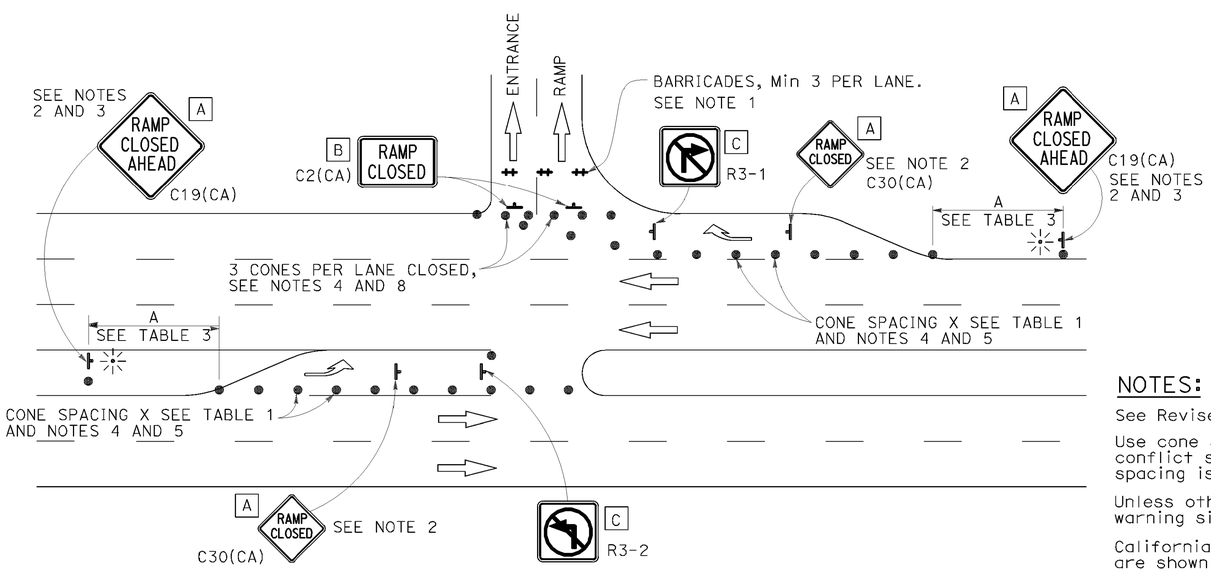

ENTRANCE RAMP WITH TURNING POCKETS

NOTES:

See Revised Standard Plan RSP T9 for tables.

Use cone spacing X for taper segment, Y for tangent segment or Z for conflict situations, as approriate, per Table 1, unless X, Y, or Z cone spacing is shown on this sheet.

Unless otherwise specified in the special provisions, all temporary warning signs shall have black legend on fluorescent orange background.

California codes are designated by (CA). Otherwise, Federal (MUTCD) codes are shown.

NOTES:

1. Barricades shall be Type I, II, or III for closures lasting one week or less and Type III for closures lasting longer than one week.
2. In addition to placing the C19(CA) "RAMP CLOSED AHEAD" and C30(CA) "RAMP CLOSED" signs, black on orange overlay plates with the word "CLOSED" may be mounted, as directed by the Engineer, on all guide signs that refer to the closed ramp. The letter size on the overlay shall be the same as the guide sign.
3. Each advance C19(CA) "RAMP CLOSED AHEAD" sign shall be equipped with at least two flags for daytime closure. Each flag shall be at least 16" x 16" in size and shall be orange or fluorescent red-orange in color. A flashing beacon shall be placed on top of the first C19(CA) sign during hours of darkness.
4. All cones used for ramp closures during the hours of darkness shall be fitted with retroreflective bands (or sleeves) as specified in the specifications.
5. Portable delineators, placed at one-half the spacing indicated for traffic cones, may be used instead of cones for daytime ramp closures only.
6. At least one person shall be assigned to provide full time maintenance of traffic control devices, unless otherwise directed by the Engineer.
7. The existing "EXIT" signs shall be covered during ramp closures.
8. A minimum of 3 cones shall be placed transversely across each closed lane and shoulder.

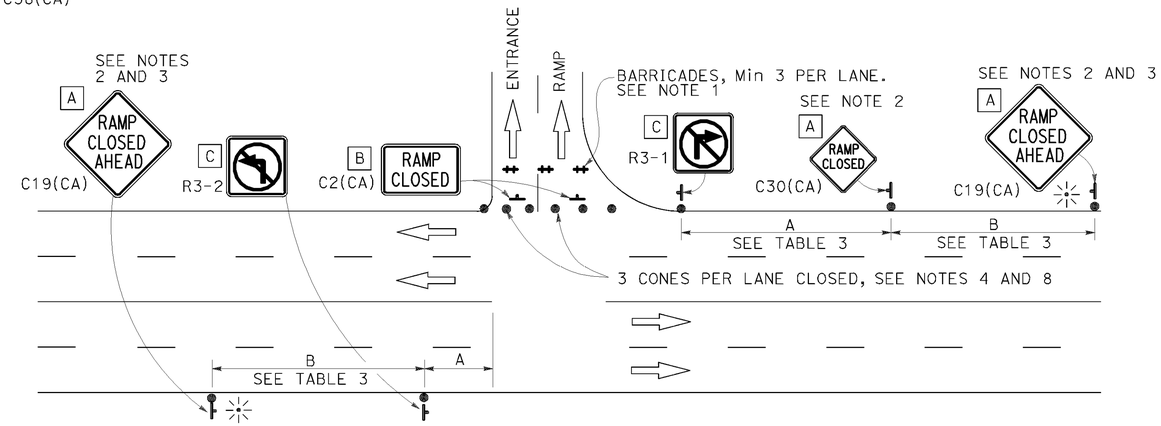

ENTRANCE RAMP WITHOUT TURNING POCKETS

STATE OF CALIFORNIA
DEPARTMENT OF TRANSPORTATION

TRAFFIC CONTROL SYSTEM FOR RAMP CLOSURE

NO SCALE

RSP T14 DATED APRIL 19, 2013 SUPERSEDES STANDARD PLAN T14
DATED MAY 20, 2011 - PAGE 242 OF THE STANDARD PLANS BOOK DATED 2010.

REVISED STANDARD PLAN RSP T14

2010 REVISED STANDARD PLAN RSP T14

P:\PROJ\01\0B080\drafting\01_00020445\010002044 5va009.dgn

12-18-12

Dist	COUNTY	ROUTE	POST MILES TOTAL PROJECT	SHEET No.	TOTAL SHEETS
01	DN	101	R4.4/9.4	42	47

REGISTERED CIVIL ENGINEER

April 19, 2013
PLANS APPROVAL DATE

REGISTERED PROFESSIONAL ENGINEER Gurinderpal Bhullar No. C48815 Exp. 9-30-14 CIVIL STATE OF CALIFORNIA

THE STATE OF CALIFORNIA OR ITS OFFICERS OR AGENTS SHALL NOT BE RESPONSIBLE FOR THE ACCURACY OR COMPLETENESS OF SCANNED COPIES OF THIS PLAN SHEET.

TO ACCOMPANY PLANS DATED 05-12-14

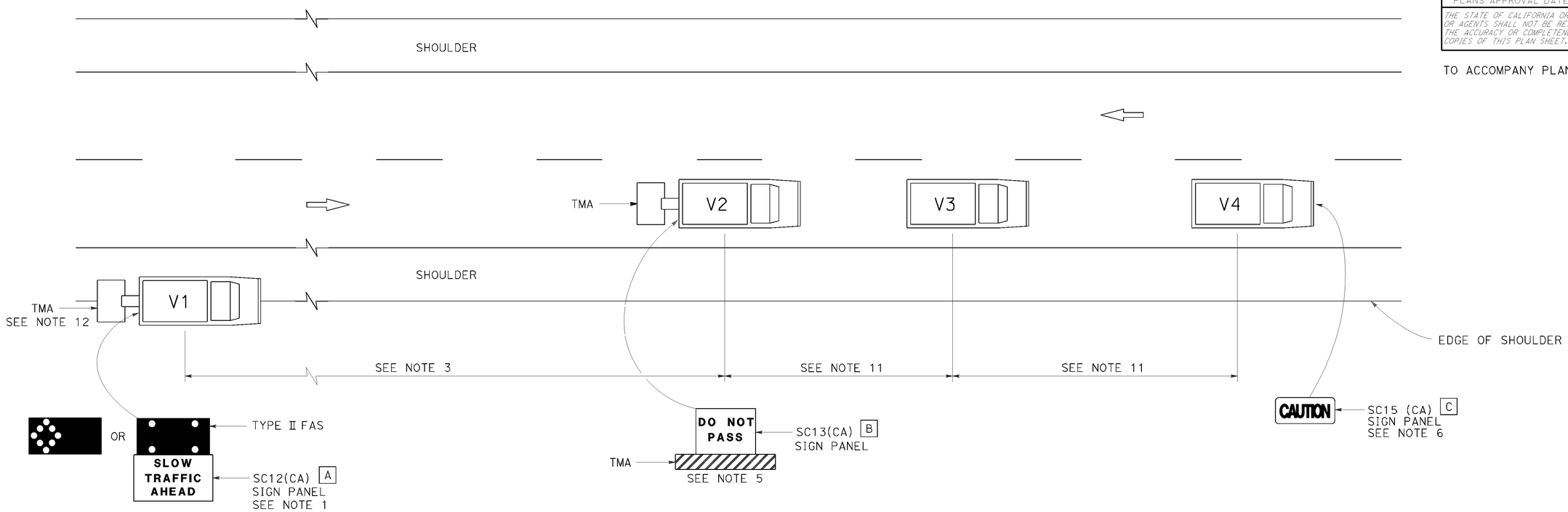

LEGEND

V1	SIGN VEHICLE
V2	SHADOW VEHICLE
V3	WORK/APPLICATION VEHICLE
V4	SIGN VEHICLE
TMA	TRUCK-MOUNTED ATTENUATOR
	FLASHING ARROW SIGN (FAS) IN FLASHING CAUTION MODE
	FLASHING ARROW SIGN (FAS) IN ALTERNATING DIAMOND CAUTION

SIGN PANEL SIZE (Min)

A	72" × 42"
B	54" × 42"
C	54" × 24"

NOTES:

1. Either a changeable message sign or a SC12(CA) "SLOW TRAFFIC AHEAD" sign shall be mounted on the rear of sign vehicle V1. The changeable message sign shall be sequenced to show the "CAUTION" message first, follow by the "SLOW TRAFFIC AHEAD" message. A Type II flashing arrow sign may be used with the SC12(CA) sign panel.
2. Sign vehicle V1 should be positioned where highly visible when shoulders are not available.
3. If traffic queues develop, sign vehicle V1 should be positioned upstream from the end of queue.
4. Vehicle-mounted sign panels shall have Type III or above retroreflective sheeting, black on white, or black on fluorescent orange, with 6" minimum series D letters per Caltrans sign specifications.
5. Shadow vehicle shall be equipped with a truck-mounted attenuator. The sign panel shown shall be mounted on the rear of shadow vehicle V2. The message "LANE CLOSED" may be used in place of the "DO NOT PASS" message.
6. The sign panel shown shall be mounted on the front of sign vehicle V4, facing opposing traffic.
7. All vehicles shall be equipped with flashing or rotating amber lights.
8. Sign vehicle V4 will not be required when the work and vehicles V2 and V3 are 2' or more from the centerline of the highway during the work or application operations.
9. All vehicles used for lane closures shall be equipped with two-way radios and the vehicle operators shall maintain communication during the work or application operation.
10. This plan shall not be used where workers would be on foot in the work area. Use a stationary type lane closure (Revised Standard Plan T13) for this condition.
11. Minimize spacing between vehicles V2 and V3 and vehicles V3 and V4 to deter road users from driving in between them.
12. If sign vehicle V1 encroaches into the traffic lane due to insufficient shoulder width, sign vehicle V1 shall be equipped with a truck-mounted attenuator. Sign vehicle V1 shall stay as close to the edge of shoulder as practicable.

STATE OF CALIFORNIA
DEPARTMENT OF TRANSPORTATION

TRAFFIC CONTROL SYSTEM FOR MOVING LANE CLOSURE ON TWO LANE HIGHWAYS

NO SCALE

RSP T17 DATED APRIL 19, 2013 SUPERSEDES STANDARD PLAN T17
DATED MAY 20, 2011 - PAGE 245 OF THE STANDARD PLANS BOOK DATED 2010.

REVISED STANDARD PLAN RSP T17

2010 REVISED STANDARD PLAN RSP T17

P:\PROJ\01\0B080\drafting\01_00020445\010002044 5va010.dgn

12-18-13

DIST	COUNTY	ROUTE	POST MILES TOTAL PROJECT	SHEET No.	TOTAL SHEETS
01	DN	101	R4.4/9.4	43	47

REGISTERED CIVIL ENGINEER 4-30-14 DATE

MAY 12, 2014
PLANS APPROVAL DATE

REGISTERED PROFESSIONAL ENGINEER JOEL MAGAÑA No. C61500 Exp. 6/30/15 CIVIL STATE OF CALIFORNIA

The State of California or its officers or agents shall not be responsible for the accuracy or completeness of scanned copies of this plan sheet.

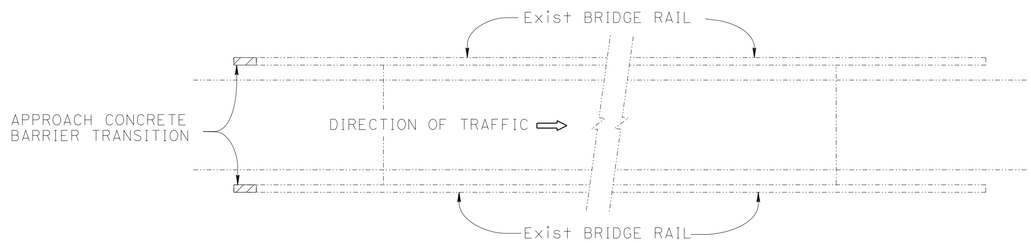

PLAN A
ONE WAY BRIDGES
NO SCALE

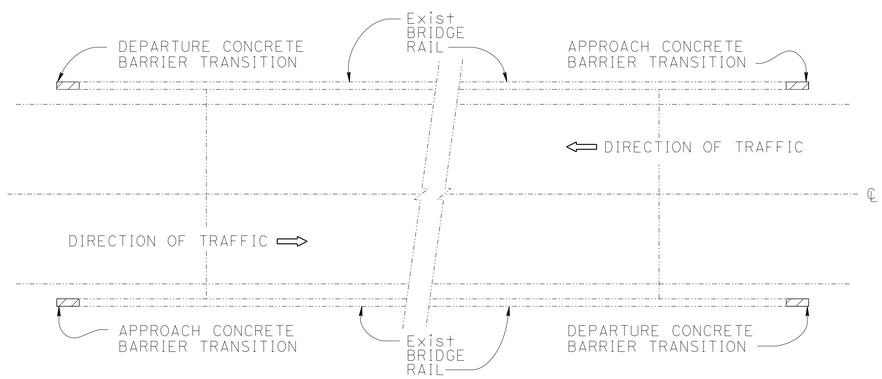

PLAN B
TWO WAY BRIDGES
NO SCALE

INDEX TO PLANS

SHEET NO.	TITLE
1.	GENERAL PLAN
2.	TYPE 1 BARRIER
3.	TYPE 1 BARRIER (CURVED)
4.	TYPE 2 BARRIER
5.	TYPE 25 (MOD) BARRIER

STANDARD PLANS DATED 2010

A10A	ACRONYMS AND ABBREVIATIONS (SHEET 1 OF 2)
RSP A10B	ACRONYMS AND ABBREVIATIONS (SHEET 2 OF 2)
A62C	LIMITS OF PAYMENT FOR EXCAVATION AND BACKFILL - BRIDGE

BRIDGE NO. 01-0026

QUANTITIES

CONCRETE BARRIER (TRANSITION) 14 LF

BRIDGE NO. 01-0026K

QUANTITIES

CONCRETE BARRIER (TRANSITION) 8 LF

BRIDGE NO. 01-0026F

QUANTITIES

CONCRETE BARRIER (TRANSITION) 10 LF

BRIDGE NO. 01-0004

QUANTITIES

CONCRETE BARRIER (TRANSITION) 12 LF

Note:
See "Roadway Plans" for work locations and MBGR.

DAVID NEUMANN
BRANCH CHIEF

	BY	CHECKED
DESIGN	JOEL MAGANA	VICTOR LOPEZ
DETAILS	BOB EDWARDS	JOEL MAGANA
QUANTITIES	X	X

LOAD & RESISTANCE FACTOR DESIGN — LIVE LOADING: HL93 W/"LOW-BOY"; PERMIT DESIGN VEHICLE

	BY	CHECKED
LAYOUT	JOEL MAGANA	VICTOR LOPEZ
SPECIFICATIONS	X	PLANS AND SPECS COMPARED X

ORIGINAL SCALE IN INCHES FOR REDUCED PLANS 0 1 2 3

STATE OF CALIFORNIA
DEPARTMENT OF TRANSPORTATION

DIVISION OF ENGINEERING SERVICES
STRUCTURE DESIGN
DESIGN BRANCH B

BRIDGE NO. VARIES
POST MILE VARIES

CONCRETE BARRIER TRANSITIONS
GENERAL PLAN

UNIT: 3619
PROJECT NUMBER & PHASE: 0100020445
CONTRACT NO.: 01-0B0800

DISREGARD PRINTS BEARING EARLIER REVISION DATES → 10-14-13 1-23-14 4-23-14 4-30-14

SHEET 1 OF 5

FILE => 01-0b0800-a-gp01.dgn

STRUCTURES DESIGN GENERAL PLAN SHEET (ENGLISH) (REV.09-01-10)

USERNAME => s132662 DATE PLOTTED => 02-JUN-2014 TIME PLOTTED => 09:19

DIST	COUNTY	ROUTE	POST MILES TOTAL PROJECT	SHEET No.	TOTAL SHEETS
01	DN	101	R4.4/9.4	44	47

REGISTERED CIVIL ENGINEER 4-30-14 DATE

MAY 12, 2014
PLANS APPROVAL DATE

REGISTERED PROFESSIONAL ENGINEER JOEL MAGAÑA No. C61500 Exp. 6/30/15 CIVIL STATE OF CALIFORNIA

The State of California or its officers or agents shall not be responsible for the accuracy or completeness of scanned copies of this plan sheet.

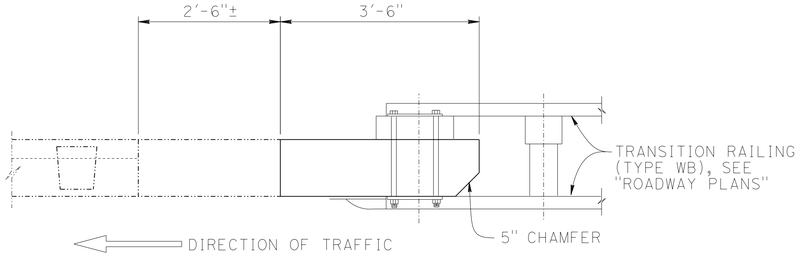

PLAN
NO SCALE

NOTES:

1. See "General Plan" sheet for identification of General Plan Type.
2. For limits of excavation and backfill see Standard Plans 2010 A62C, Section E-E.
3. See Roadway Plans for work locations.
4. Cut and remove portion of Type 1 and BAGR as required.
5. Holes used for fastening existing MBGR shall be mortar filled, unless holes were cast using pipe sleeves.
6. Existing barrier heights vary. Where exist barrier height is more than 2'-8", transition barrier height to 2'-8" @ 4:1 slope.

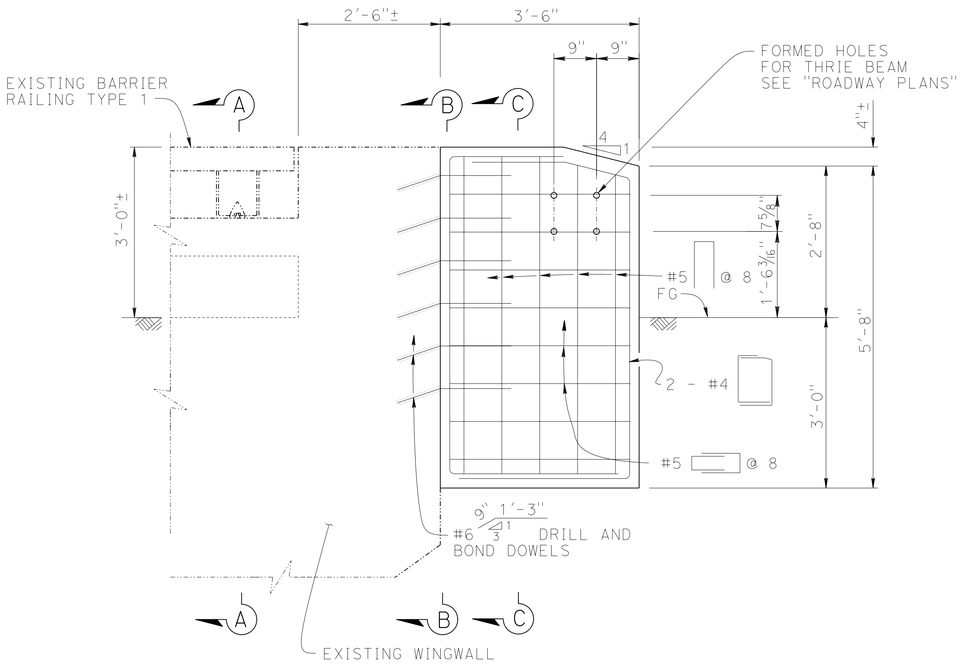

ELEVATION
NO SCALE

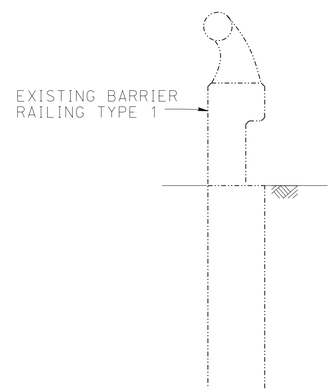

SECTION A-A
NO SCALE

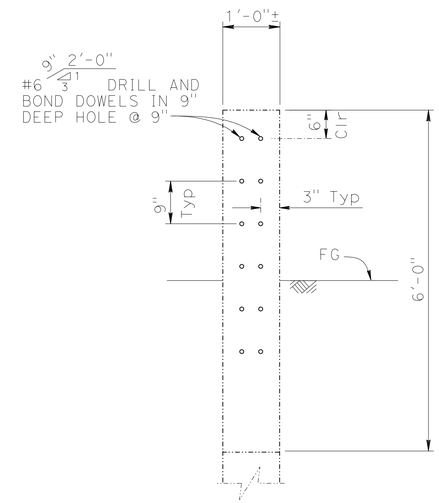

SECTION B-B
NO SCALE

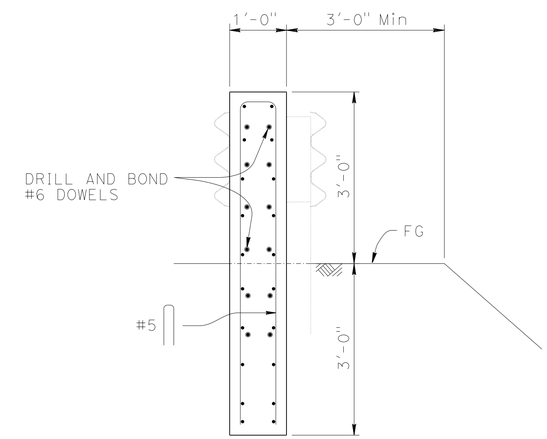

SECTION C-C
NO SCALE

LOCATION TABLE OF TYPE 1 CONCRETE BARRIER TRANSITION APPLICATIONS

BRIDGE No.	BRIDGE NAME	ROUTE	POST MILE	DIRECTION	NO. OF CONNECTIONS (TYPE WB)		TOTAL LENGTH (LF)	GENERAL PLAN TYPE
					APPROACH END	DEPARTURE END		
01-0026	RTE 101/169 SEP	101	R4.63	NB	1	1	14	B
				SB	1	1		
01-0026K *	HOPPOW CREEK (OFF RAMP)	101	R4.76	SB	1 (Right)	--	3.5	A

* For approach end (left) refer to "TYPE 2 BARRIER" sheet.

LEGEND:

INDICATES EXISTING STRUCTURE

INDICATES NEW STRUCTURE

NOTE:
THE CONTRACTOR SHALL VERIFY ALL CONTROLLING FIELD DIMENSIONS BEFORE ORDERING OR FABRICATING ANY MATERIAL.

BRANCH CHIEF DAVID NEUMANN

	BY	CHECKED
DESIGN	JOEL MAGANA	VICTOR LOPEZ
DETAILS	BOB EDWARDS	JOEL MAGANA
QUANTITIES	X	X

STATE OF CALIFORNIA DEPARTMENT OF TRANSPORTATION

DIVISION OF ENGINEERING SERVICES STRUCTURE DESIGN DESIGN BRANCH B

BRIDGE NO. VARIES
POST MILE VARIES

CONCRETE BARRIER TRANSITIONS
TYPE 1 BARRIER

STRUCTURES DESIGN DETAIL SHEET (ENGLISH) (REV. 09-01-10)

ORIGINAL SCALE IN INCHES FOR REDUCED PLANS 0 1 2 3

UNIT: 3619
PROJECT NUMBER & PHASE: 0100020445
CONTRACT NO.: 01-0B0800

DISREGARD PRINTS BEARING EARLIER REVISION DATES → 4-23-14 4-30-14

SHEET 2 OF 5

FILE => 01-0b0800-u-misc-d101.dgn

USERNAME => s132662 DATE PLOTTED => 02-JUN-2014 TIME PLOTTED => 09:19

DIST	COUNTY	ROUTE	POST MILES TOTAL PROJECT	SHEET No.	TOTAL SHEETS
01	DN	101	R4.4/9.4	45	47

REGISTERED CIVIL ENGINEER 4-30-14 DATE

MAY 12, 2014
PLANS APPROVAL DATE

REGISTERED PROFESSIONAL ENGINEER JOEL MAGANA No. C61500 Exp. 6/30/15 CIVIL STATE OF CALIFORNIA

The State of California or its officers or agents shall not be responsible for the accuracy or completeness of scanned copies of this plan sheet.

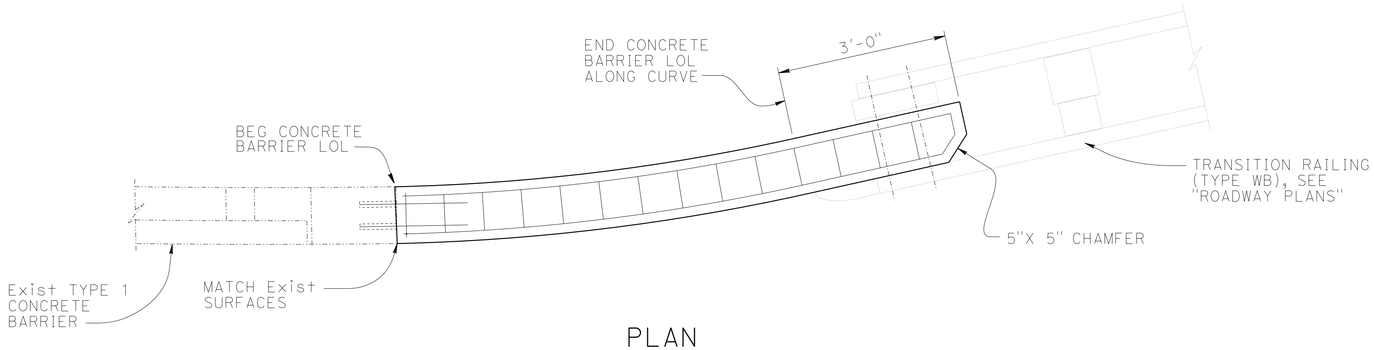

PLAN
NO SCALE

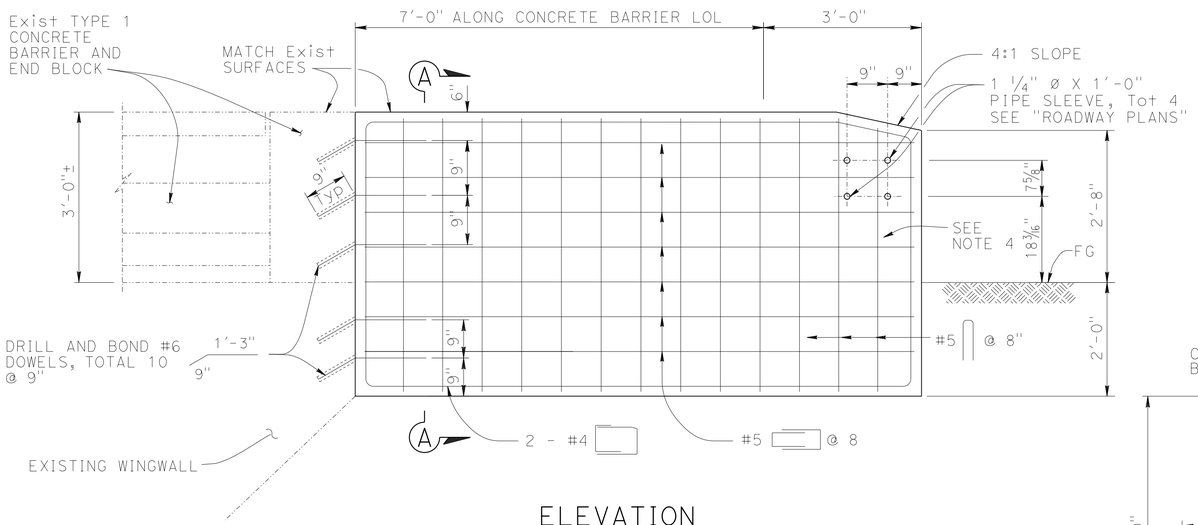

ELEVATION
NO SCALE

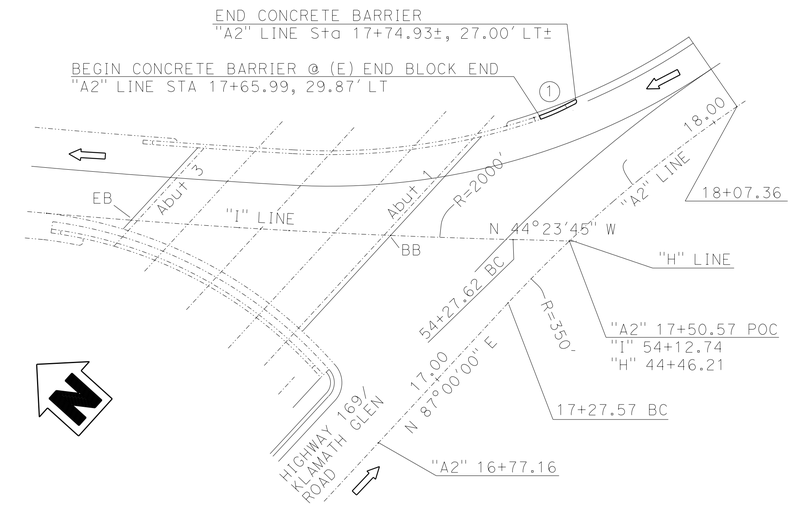

Note: Layout lines taken from Bridge As-Built dated 4/20/64

CURVE DATA				
No.	R	Δ	T	L
1	60'	7.057°	3.70'	7.00"

SITE PLAN
NO SCALE

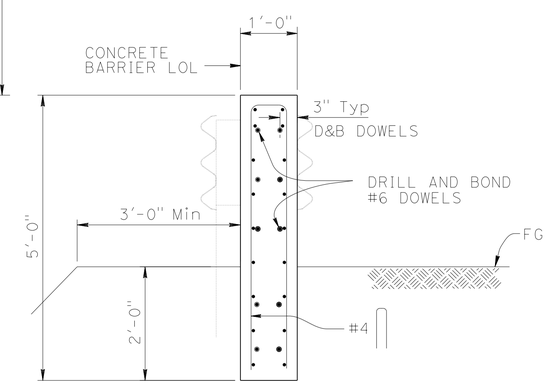

SECTION A-A
NO SCALE

LOCATION TABLE OF TYPE 1 BARRIER TRANSITION APPLICATIONS

BRIDGE No.	BRIDGE NAME	ROUTE	POST MILE	DIRECTION	NO. OF CONNECTIONS (TYPE WB)		TOTAL LENGTH (LF)	GENERAL PLAN TYPE
					APPROACH END	DEPARTURE END		
01-0026F	HOPPOW CREEK (ON RAMP)	101	R4.81	NB	1	-	10	A

NOTE:
THE CONTRACTOR SHALL VERIFY ALL CONTROLLING FIELD DIMENSIONS BEFORE ORDERING OR FABRICATING ANY MATERIAL.

Legend:

INDICATES EXISTING STRUCTURE

INDICATES NEW CONSTRUCTION

Notes:

1. See "General Plan Sheet" for identification of General Plan Type.
2. For limits of excavation and backfill see Standard Plans 2010 A62C, Section E-E.
3. See Roadway Plans for work locations.
4. Cut and remove portion of Type 1 and BAGR as required
5. Holes used for fastening existing MBGR shall be mortar filled, unless holes were cast using pipe sleeves.
6. Existing barrier heights vary. Where exist barrier height is more than 2'-8", transition barrier height to 2'-8" @ 4:1 slope.

BRANCH CHIEF DAVID NEUMANN

	BY	CHECKED
DESIGN	JOEL MAGANA	VICTOR LOPEZ
DETAILS	BOB EDWARDS	JOEL MAGANA
QUANTITIES	X	X

STATE OF CALIFORNIA
DEPARTMENT OF TRANSPORTATION

DIVISION OF ENGINEERING SERVICES
STRUCTURE DESIGN
DESIGN BRANCH B

BRIDGE NO. 01-0026F
POST MILE R4.81

CONCRETE BARRIER TRANSITIONS
TYPE 1 BARRIER (CURVED)

STRUCTURES DESIGN DETAIL SHEET (ENGLISH) (REV. 09-01-10)

ORIGINAL SCALE IN INCHES FOR REDUCED PLANS 0 1 2 3

UNIT: 3619
PROJECT NUMBER & PHASE: 0100020445
CONTRACT NO.: 01-0B0800

DISREGARD PRINTS BEARING EARLIER REVISION DATES

REVISION DATES 4-23-14 4-30-14

SHEET 3 OF 5

FILE => 01-0b0800-u-misc-dt02.dgn

USERNAME => s132662 DATE PLOTTED => 02-JUN-2014 TIME PLOTTED => 09:19

DIST	COUNTY	ROUTE	POST MILES TOTAL PROJECT	SHEET No.	TOTAL SHEETS
01	DN	101	R4.4/9.4	46	47

REGISTERED CIVIL ENGINEER 4-30-14 DATE

MAY 12, 2014
PLANS APPROVAL DATE

REGISTERED PROFESSIONAL ENGINEER JOEL MAGAÑA No. C61500 Exp. 6/30/15 CIVIL STATE OF CALIFORNIA

The State of California or its officers or agents shall not be responsible for the accuracy or completeness of scanned copies of this plan sheet.

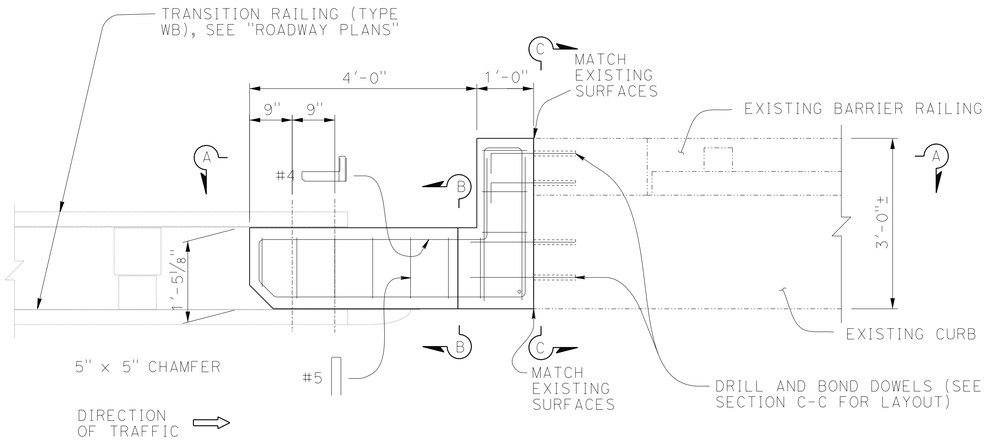

PLAN
NO SCALE

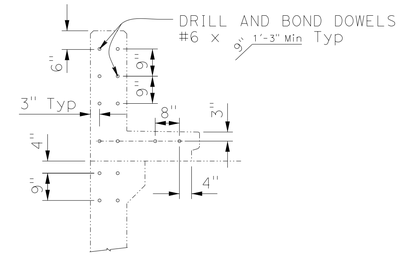

SECTION C-C
NO SCALE

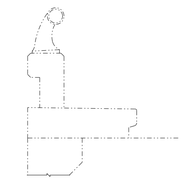

TYPICAL SECTION
EXISTING TYPE 2 BARRIER
NO SCALE

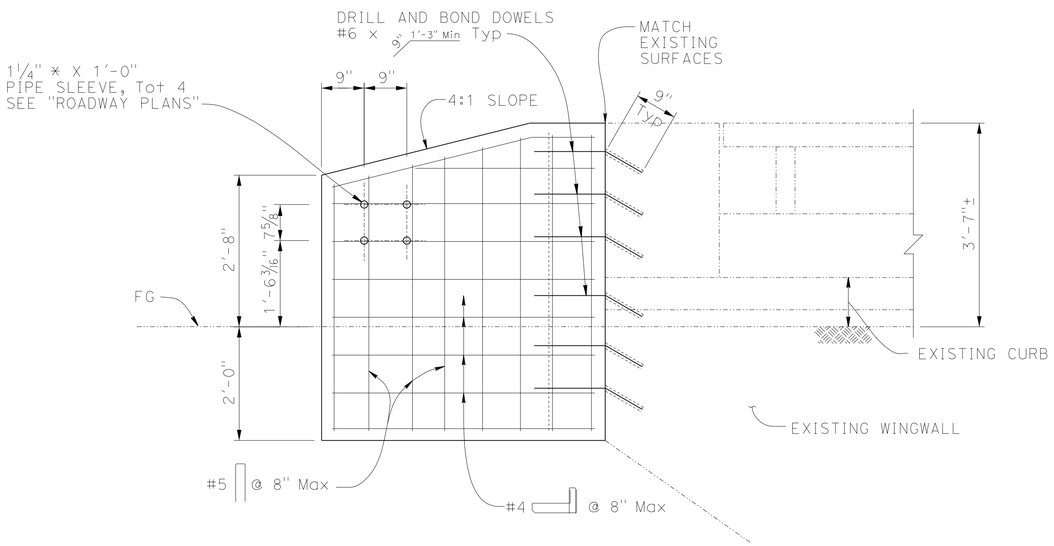

ELEVATION
NO SCALE

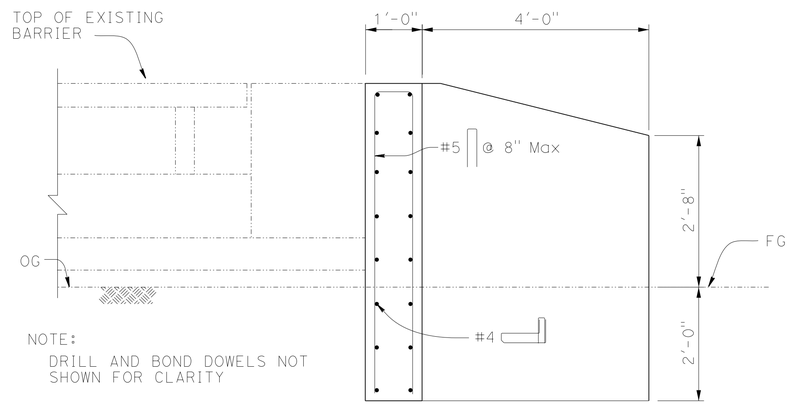

NOTE:
DRILL AND BOND DOWELS NOT SHOWN FOR CLARITY

SECTION A-A
NO SCALE

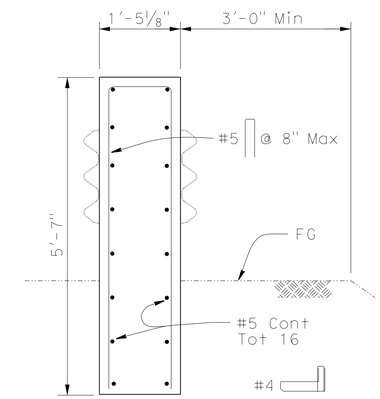

SECTION B-B
NO SCALE

NOTES:

1. See "General Plan" sheet for identification of General Plan Type.
2. For limits of excavation and backfill see Standard Plans 2010 A62C, Section E-E.
3. See Roadway Plans for work locations.
4. Holes used for fastening existing MBGR shall be mortar filled, unless holes were cast using pipe sleeves.

LOCATION TABLE OF TYPE 2 CONCRETE BARRIER TRANSITION APPLICATIONS

BRIDGE No.	BRIDGE NAME	ROUTE	POST MILE	DIRECTION	NO. OF CONNECTIONS (TYPE WB)		TOTAL LENGTH (LF)	GENERAL PLAN TYPE
					APPROACH END	DEPARTURE END		
01-0026K *	HOPPOW CREEK (OFF RAMP)	101	R4.76	SB	1 (LEFT)	-	5	A

* For approach end (right) refer to "TYPE 1 BARRIER" sheet.

THE CONTRACTOR SHALL VERIFY ALL CONTROLLING FIELD DIMENSIONS BEFORE ORDERING OR FABRICATION ANY MATERIAL.

BRANCH CHIEF DAVID NEUMANN

	BY	CHECKED
DESIGN	JOEL MAGANA	VICTOR LOPEZ
DETAILS	BOB EDWARDS	JOEL MAGANA
QUANTITIES	X	X

STATE OF CALIFORNIA
DEPARTMENT OF TRANSPORTATION

DIVISION OF ENGINEERING SERVICES
STRUCTURE DESIGN
DESIGN BRANCH B

BRIDGE NO. 01-0026K
POST MILE R4.76

CONCRETE BARRIER TRANSITIONS
TYPE 2 BARRIER

STRUCTURES DESIGN DETAIL SHEET (ENGLISH) (REV. 09-01-10)

ORIGINAL SCALE IN INCHES FOR REDUCED PLANS 0 1 2 3

UNIT: 3619
PROJECT NUMBER & PHASE: 0100020445
CONTRACT NO.: 01-0B0800

DISREGARD PRINTS BEARING EARLIER REVISION DATES

REVISION DATES: 4-23-14 4-30-14

SHEET 4 OF 5

FILE => 010b0800umiscd+03.dgn

USERNAME => s132662 DATE PLOTTED => 02-JUN-2014 TIME PLOTTED => 09:19

DIST	COUNTY	ROUTE	POST MILES TOTAL PROJECT	SHEET No.	TOTAL SHEETS
01	DN	101	R4.4/9.4	47	47

REGISTERED CIVIL ENGINEER 4-30-14 DATE

MAY 12, 2014
PLANS APPROVAL DATE

REGISTERED PROFESSIONAL ENGINEER JOEL MAGAÑA No. C61500 Exp. 6/30/15 CIVIL STATE OF CALIFORNIA

The State of California or its officers or agents shall not be responsible for the accuracy or completeness of scanned copies of this plan sheet.

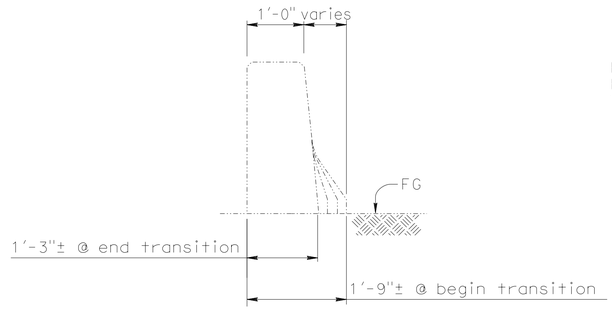

TYPICAL SECTION
(E) TYPE 25 (MOD) TRANSITION
NO SCALE

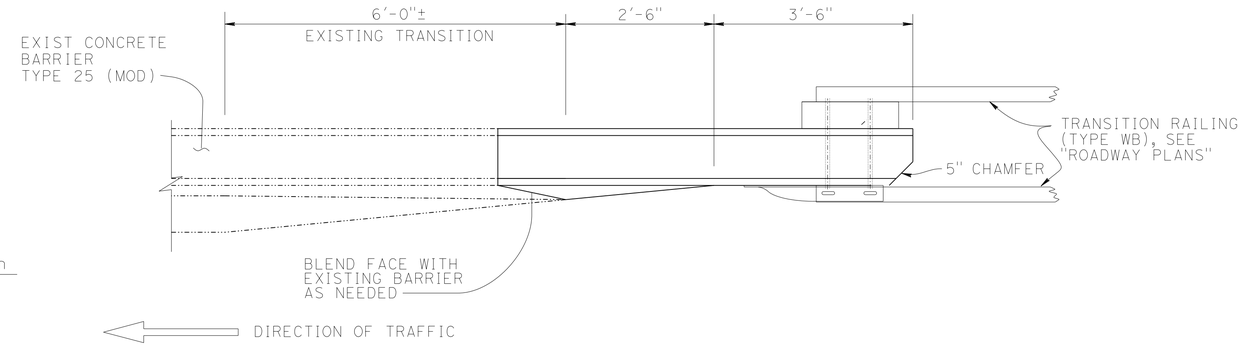

PLAN
NO SCALE

Legend:

INDICATES EXISTING STRUCTURE

INDICATES NEW CONSTRUCTION

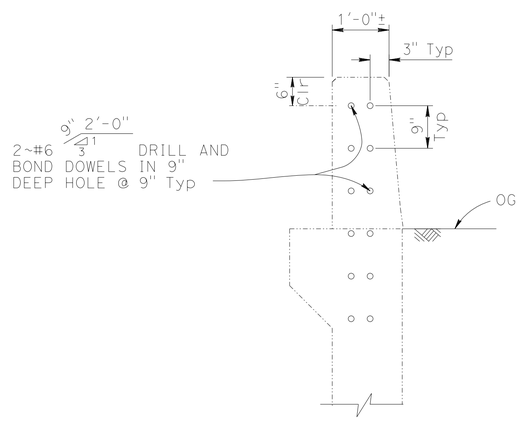

SECTION A-A
NO SCALE

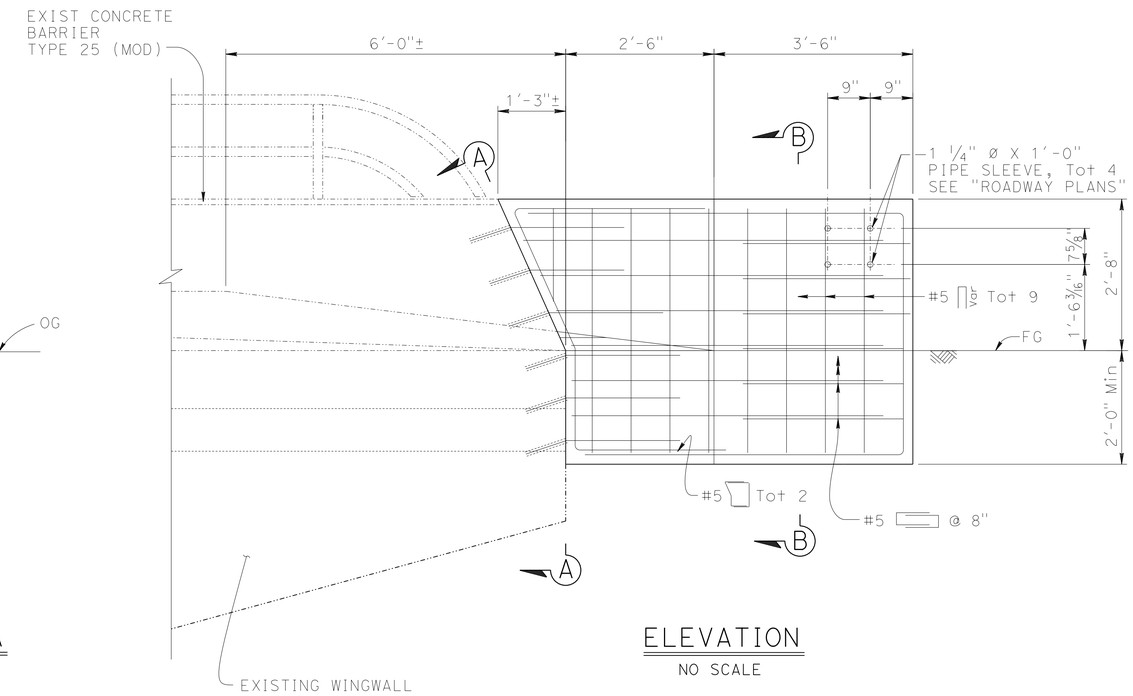

ELEVATION
NO SCALE

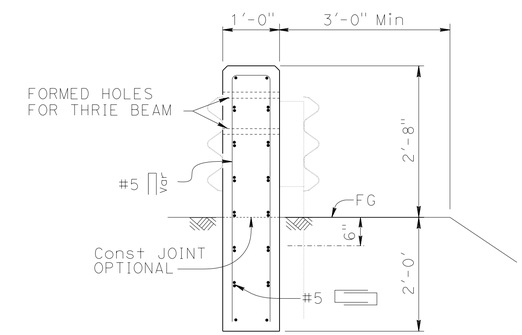

SECTION B-B
NO SCALE

NOTE:
THE CONTRACTOR SHALL VERIFY ALL CONTROLLING FIELD DIMENSIONS BEFORE ORDERING OR FABRICATING ANY MATERIAL.

NOTES:

1. See "General Plan" sheet for identification of General Plan Type.
2. For limits of excavation and backfill see Standard Plans 2010 A62C, Section E-E.
3. See Roadway Plans for work locations.
4. Holes used for fastening existing MBGR shall be mortar filled, unless holes were cast using pipe sleeves.

LOCATION TABLE OF TYPE 25 (MOD) BARRIER TRANSITION APPLICATIONS

BRIDGE No.	BRIDGE NAME	ROUTE	POST MILE	DIRECTION	NO. OF CONNECTIONS (TYPE WB)		TOTAL LENGTH (LF)	GENERAL PLAN TYPE
					APPROACH END	DEPARTURE END		
01-0004	High Prairie Creek	101	9.39	NB	1	-	12	B
				SB	-	1		

BRANCH CHIEF DAVID NEUMANN

	BY	CHECKED
DESIGN	JOEL MAGANA	VICTOR LOPEZ
DETAILS	P C WELLS	JOEL MAGANA
QUANTITIES	X	X

STATE OF CALIFORNIA
DEPARTMENT OF TRANSPORTATION

DIVISION OF ENGINEERING SERVICES
STRUCTURE DESIGN
DESIGN BRANCH B

BRIDGE NO. 01-0004
POST MILE 9.39

CONCRETE BARRIER TRANSITIONS
TYPE 25 (MOD) BARRIER

STRUCTURES DESIGN DETAIL SHEET (ENGLISH) (REV. 09-01-10)

ORIGINAL SCALE IN INCHES FOR REDUCED PLANS 0 1 2 3

UNIT: 3619
PROJECT NUMBER & PHASE: 0100020445
CONTRACT NO.: 01-0B0801

DISREGARD PRINTS BEARING EARLIER REVISION DATES

REVISION DATES 4-23-14 4-30-14

SHEET 5 OF 5

FILE => 010b0800umiscd104.dgn

USERNAME => s132662 DATE PLOTTED => 02-JUN-2014 TIME PLOTTED => 09:19