Table of Revisions from SDC 1.6 to SDC 1.7

Section	Revision
Table of Contents	New Subsections added: 2.1.2.1, 2.1.2.2, 2.2.5, 7.7.2.2 Caption change to Subsections 3.1.1, 3.8.2, 7.7.1.2, 7.7.1, 7.7.2, 7.7.3.2, 8.1.1, and 8.1.2 Renumbering of previous Subsections 6.2.2(A), 6.2.2(B), 6.2.2(C), 7.6.2(a), 7.6.2(b), 7.6.2(c), 7.7.1.2.1, 7.7.1.2.2, 7.7.1.2.3, and 7.7.4 Numbering of Tables implemented New Equation numbering system based on Subsection numbering implemented New Figure numbering system based on Subsection numbering implemented Repagination
1.	Minor editorial correction
1.1	Revisions made to "Definition of an Ordinary Standard Bridge"
1.2	Table number and caption added to listing of bridge components Minor editorial correction
2.1.2	Caption change and correction to previous Figure 2.1 (present Figure 2.1.2-1) Provisions of previous Section 2.1.2 moved to new Subsection 2.1.2.1 Additional design information on Horizontal Ground Motion added
2.1.2.1	New subsection added: "Ground Motion Application in Elastic Dynamic Analysis" Previous provisions of Section 2.1.2 moved to this Subsection New Figure 2.1.2.1-2 added
2.1.2.2	New subsection added: "Ground Motion Application in Equivalent Static Analysis"
2.2.5	New subsection added: "Scour, Liquefaction and Lateral Spreading Considerations"
3.1.1	Updated definition of ductile/seismic-critical members
3.6.5.3	Additional information added to previous Figure 3.9 (present Figure 3.6.5.3-1)
3.8.1	Equation for volumetric ratio of lateral reinforcement for rectangular columns added (Equation 3.8.1-2)
3.8.2	Additional information including a new table (Table 3.8.2-1) on Lateral Reinforcement added
3.8.4	Correction made to Section reference for volume of lateral reinforcement in plastic hinge region of Pier walls
4.3.2-1	Correction to previous Figure 4.3 (present Figure 4.3.2-1)

5.2.1	New design information added to “Equivalent Static Analysis” method
5.2.2	New design information added to “Elastic Dynamic Analysis” method
6.2.2	Subsection numbering for 6.2.2 (A), 6.2.2 (B), and 6.2.2 (C) changed to 6.2.2.1, 6.2.2.2, and 6.2.2.3, respectively
6.2.2.1	ASTM Reference for Soil testing added
6.2.3.1	Footnote No. 7 deleted
7.1.1	Table number and caption added to Bent/column Balanced Stiffness ratios Minor correction to previous Figure 7.1 (present Figure 7.1.1-1) Balanced Stiffness ratios for frames changed from a “recommendation” to a “requirement”
7.1.2	Ratio of fundamental period for frames changed from a “recommendation” to a “requirement”
7.2.1.1	Definition of Effective Superstructure Width clarified Previous Figure 7.2 (present Figure 7.2.1.1-1) modified with new diagrams added
7.2.2	Clarification made to use of lap splices for mild reinforcement
7.2.5	New design consideration for in-span hinges added
7.2.5.3	Ratio of fundamental period for frames changed from a “recommendation” to a “requirement”
7.2.5.4	Minor update to Figure 7.2.5.4-1 Information added to clarify definition of Hinge Seat Width
7.2.6	Provided clarification on use of hinge restrainers A reference for an approximate design method for restrainers provided Editorial correction to Specifications and Standard Detail Sheet
7.4.3	Definition of Knee Joint amended Clarified development requirements for main bent cap top and bottom bars Previous Figure 7.10c moved to this subsection and renamed “Figure 7.4.3-1”
7.4.4.2	Editorial correction
7.4.5.1	Definition of Case 2 Knee Joint amended Simplified previous Equation 7.23j (present Equation 7.4.5.1-9) for Case 1 Knee Joint Transverse Reinforcement
7.6.2	Provision updated to cover plastic hinge lengths for Cased and CISS columns and shafts Previous Subsection numbering for 7.6.2 (a), 7.6.2 (b), and 7.6.2 (c) changed to 7.6.2.1, 7.6.2.2, and 7.6.2.3, respectively

7.6.6	Additional information on Pier Walls added
7.6.7	Design equations and limitations (Equations 7.6.7-1, 7.6.7-2, 7.6.7-3, and 7.6.7-4) added for Column Key design
7.7.1	Caption changed to "Pile Foundation Design." Previous Equations 7.28 and 7.29 (present Equations 7.7.1-1 and 7.7.1-2) for pile foundations and the first paragraph of Subsection 7.7.1.1 modified and moved to this Subsection Previous Figure 7.11 (present Figure 7.7.1-1) updated and placed in this Subsection
7.7.1.1	Provisions rearranged and clarified Previous Figure 7.12 (present Figure 7.7.1.1-1) for Competent soil modified Previous Equation 7.30 deleted. New Equation 7.7.1.1-1 provided for competent soil Previous Equations 7.31b and 7.31c deleted
7.7.1.2	Caption changed to "Pile Foundations in Poor and Marginal Soils" First paragraph of previous Subsection 7.7.1.2.1 modified and moved to this Subsection New design provisions for Pile Foundations in Poor and Marginal soils added
7.7.1.2A	Previous Subsection number 7.7.1.2.1 changed to 7.7.1.2A and caption changed to "Lateral and Vertical Design" Equation 7.7.1.2A-1 for foundations in Marginal soil added to this Subsection Figure 7.7.1.2A-1 for foundations in Poor soil and Soft/liquefiable Marginal soil added
7.7.1.2B	Previous Subsection number 7.7.1.2.2 changed to 7.7.1.2B
7.7.1.2C	Previous Subsection number 7.7.1.2.3 changed to 7.7.1.2C
7.7.1.7	Correction made to previous Figure 7.13d (present Figure 7.7.1.7-2) to match the provisions
7.7.2	Caption changed to "Pier Wall Foundation Design." Previous provisions moved to new Subsection 7.7.2.2.
7.7.2.2	New Subsection numbering captioned "Pier Wall Pile Foundations"
7.7.3.2	Shear Demand/Capacity requirements for Type II Shafts provided New Figure 7.7.3.2-1 added to clarify provisions
7.7.4	New design requirements provided for Pile and Shaft Extensions
7.8.3	Definition of Δ_{eq} clarified Minor update to Figure 7.8.3-1 Information added to clarify definition of Abutment Seat Width

7.8.4.1	Previous Equations 7.50 and 7.51 (present Equations 7.8.4.1A-3 and 7.8.4.1A-4) rearranged to clarify provision Removed skew angle restriction for Isolated Shear Key design method Updated previous Figure 7.16A (present Figure 7.8.4.1-1A) New Equations (7.8.4.1B-3 and 7.8.4.1B-4) for minimum length for placement of shear key reinforcement added
8.1.1	Correction made to definition of “No-Splice Zone” Exception made for rebar splicing in No-splice zones of long columns/shafts
8.1.2	Additional information on splicing of main flexural reinforcement added
8.1.4	Editorial correction
8.2.1	Provided justification for Equation 8.2.1-1 (previous Equation 8.1) Simplified previous Equation 8.2 (present Equation 8.2.1-2)
Appendix B	World Wide Web links and References updated
Bibliography	New References added

1. INTRODUCTION

The Caltrans Seismic Design Criteria (SDC) specifies the minimum seismic design requirements that are necessary to meet the performance goals for **Ordinary bridges.** When the **Design Seismic Hazards (DSH)** occur, Ordinary bridges designed per these specifications are expected to remain standing but may suffer significant damage requiring closure. See Sections 1.1 and 6.1, respectively, for definitions of **Ordinary bridges** and **Design Seismic Hazards**.

The SDC is a compilation of new and existing seismic design criteria documented in various publications. The goal of this document is to update all the Structure Design (SD) design manuals[1] on a periodic basis to reflect the current state of practice for seismic bridge design. As information is incorporated into the design manuals, the SDC will serve as a forum to document Caltrans' latest changes to the seismic design methodology. Proposed revisions to the SDC will be reviewed by SD management according to the process outlined in MTD 20-11.

The SDC applies to Ordinary Standard bridges as defined in Section 1.1. Ordinary Nonstandard bridges require project specific criteria to address their non-standard features. Designers should refer to the SD design manuals for seismic design criteria not explicitly addressed by the SDC.

The following criteria identify the minimum requirements for seismic design. Each bridge presents a unique set of design challenges. The designer must determine the appropriate methods and level of refinement necessary to design and analyze each bridge on a case-by-case basis. The designer must exercise judgment in the application of these criteria. Situations may arise that warrant detailed attention beyond what is provided in the SDC. The designer should refer to other resources to establish the correct course of action. The SD Senior Seismic Specialists, the General Earthquake Committee, the Earthquake Engineering Office of Structure Policy and Innovation, or ~~Caltrans Structures Design Oversight Representative~~ the Liaison Engineer (for externally funded projects) should be consulted for recommendations.

Deviations ~~to~~ from these criteria shall be reviewed and approved by the Design Branch Chief or the Senior Seismic Specialist and documented in the project file. Significant departures shall be presented to the Type Selection Panel and/or the Design Branch Chief for approval as outlined in MTD 20-11.

[1] Caltrans Design Manuals: AASHTO LRFD Bridge Design Specifications and CA Amendments, Memo To Designers, Bridge Design Details, Bridge Design Aids, Bridge Design Practice. Throughout this document, the term "LRFD BDS" shall be used to represent AASHTO LRFD Bridge Design Specifications with Interims and CA Amendments [12,14].

This document is intended for use on bridges designed by and for Caltrans. It reflects the current state of practice at Caltrans. This document contains references specific and unique to Caltrans and may not be applicable to other parties either institutional or private.

1.1 Definition of an Ordinary Standard Bridge

A structure must meet all of the following requirements, as applicable, to be classified as an Ordinary Standard bridge:

- Each ~~S~~span length~~s~~ is less than 300 feet ~~(90 m)~~
- Bridges with single superstructures on either a horizontally curved, vertically curved, or straight alignment
- Constructed with ~~normal weight~~ precast or cast-in-place concrete girder, concrete slab superstructure on pile extensions, ~~and~~ column or pier walls ~~elements~~, and structural steel girders composite with concrete slab superstructure which are supported on reinforced concrete substructure elements
- Horizontal members either rigidly connected, pin connected, or supported on conventional bearings~~; isolation bearings and dampers are considered nonstandard components.~~
- Bridges with ~~D~~dropped bent caps or integral bent caps ~~terminating inside the exterior girder; C-bents, outrigger bents, and offset columns are nonstandard components.~~
- ~~Foundations~~ Columns and pier walls supported on spread footings, pile caps ~~w/~~ with piles~~,~~ or ~~pile~~ shafts
- ~~Soil that is not susceptible to liquefaction, lateral spreading, or scour~~ Bridges supported on soils which may or may not be susceptible to liquefaction and/or scour
- Spliced precast concrete bridge system emulating a cast-in-place continuous structure
- ~~Bridge systems with a fundamental period~~ Fundamental period of the bridge system is greater than or equal to 0.7 seconds in the transverse and longitudinal directions of the bridge

Bridges not meeting these requirements or features may be classified as either Ordinary Non-standard, or Important bridges and require project-specific design criteria which are beyond the scope of the SDC.

1.2 Types of Components Addressed in the SDC

The SDC is focused on concrete bridges. Seismic criteria for structural steel bridges are being developed independently and will be incorporated into the future releases of the SDC. In the interim, inquiries regarding the seismic performance of structural steel components shall be directed to the Structural Steel Technical Specialist and the Structural Steel Committee.

The SDC includes seismic design criteria for Ordinary Standard bridges constructed with the types of components listed in Table ~~1~~ 1.2-1.

Table ~~1~~ 1.2-1 Ordinary Standard Bridge Components

Abutments
- Diaphragm
- Short Seat
- High Cantilever

Superstructures
- Cast -In-Place
  - · Reinforced concrete
  - · Post-tensioned concrete
- Precast
  - · Reinforced concrete
  - · Pre-tensioned concrete
  - · Post-tensioned concrete

Substructure Support Systems
- Single Column
- Multi-Column
- Pier Walls
- Pile Extensions

Foundations
- Spread Footings
- Driven Piles
  - · Steel H/HP and Pipe
  - · Precast P/S
  - · CISS
- Drilled Shafts
  - · CIDH
  - · Large Diameter
    - Types I & II
- Proprietary Pile Systems

2.1.2 Horizontal Ground Motion

Earthquake ground shaking hazard has a random orientation and may be equally probable in all horizontal directions. The method for obtaining the maximum demand on bridge members due to the directionality of ground shaking depends on the analysis method and complexity of the bridge. Refer to Sections 5.1 and 5.2 for analysis methods and requirements for Ordinary Standard bridges. For complex bridges, which is beyond the scope of the SDC, Nonlinear Time History Analysis using multiple ground motions applied in two or three orthogonal directions of the bridge, account for the uncertainty in ground motion direction.

2.1.2.1 Ground Motion Application in Elastic Dynamic Analysis

For the Elastic Dynamic Analysis (EDA) method (see Section 5.2.2), ~~E~~earthquake effects shall be determined from horizontal ground motion applied by either of the following methods:

Method 1 The application of ~~the~~ equal components of ground motion in two orthogonal directions along a set of global axes, where the longitudinal axis is typically represented by a chord connecting the two abutments, see Figure ~~2.1~~ 2.1.2.1-1. The resulting responses are combined using absolute values of the displacements according to the following two cases:

Case I: Combine the response resulting from 100% of the transverse loading with the corresponding response from 30% of the longitudinal loading.

Case II: Combine the response resulting from 100% of the longitudinal loading with the corresponding response from 30% of the transverse loading.

The maximum of the two cases is used as the displacement in the longitudinal and transverse directions for bridge design.

Method 2 ~~The application of the ground motion along the principal axes of individual components. The ground motion must be applied at a sufficient number of angles to capture the maximum deformation of all critical components.~~

The bridge is subjected to two equal components of ground shaking motion applied in orthogonal directions selected by the engineer. The motion is then rotated in angular increments to produce the maximum effects in the desired directions for design. The maximum effects from this combination method is implemented mathematically by Complete Quadratic Combination 3 - CQC3 method [23] or the Square Root of Sum of Squares (SRSS) method if a CQC3 tool is

unavailable to the designer.

Combination Method 2 implemented by the CQC3 technique is the preferred method for multimodal dynamic analysis and is recommended over Combination Method 1.

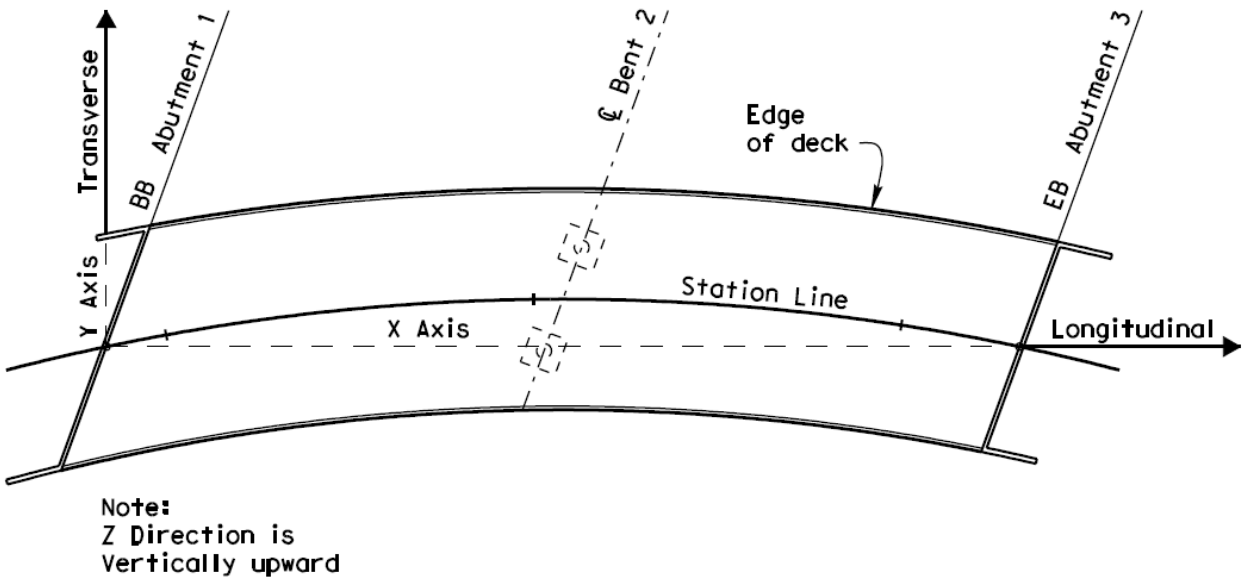

Bridge Plan – Global Axis

Figure ~~2.1~~ 2.1.2.1-1 ~~Local~~ Global Axis Definition

If the local displacements in the transverse (T) and longitudinal (L) directions of an element (Δ_T and Δ_L, respectively) are not directly available from the analysis tool, the global X and Y displacements (Δ_X and Δ_Y, respectively) can be transformed into the desired local displacements as follows (see Figure 2.1.2.1-2 and Equations 2.1.2.1-1 and 2.1.2.1-2).

$$\Delta_L = \Delta_X \times |\cos\theta| + \Delta_Y \times |\sin\theta| \qquad 2.1.2.1\text{-}1$$

$$\Delta_T = \Delta_X \times |\sin\theta| + \Delta_Y \times |\cos\theta| \qquad 2.1.2.1\text{-}2$$

where, θ is the angular difference between the local and global directions (see Figure 2.1.2.1-2).

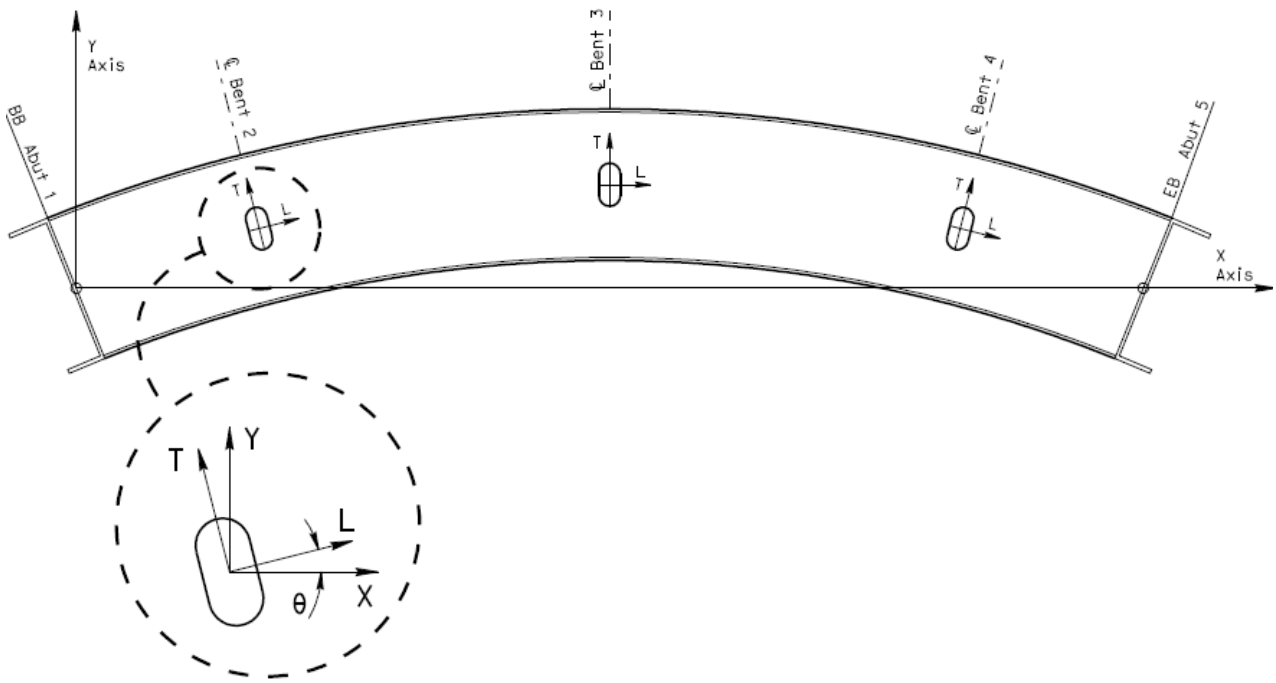

T = Local transverse direction, Y = Global transverse direction
L = Local longitudinal direction, X = Global longitudinal direction

Figure 2.1.2.1-2 Coordinate Transformation in Elastic Dynamic Analysis

2.1.2.2 Ground Motion Application in Equivalent Static Analysis

For the Equivalent Static Analysis (ESA) method (see Section 5.2.1), the displacement demands in the longitudinal and transverse directions of the bridge model obtained from the design response spectra are not combined using any combination method. For straight bridges, the resulting displacements are similar to those obtained using EDA. However, for simple curved bridges where ESA and EDA methods are equally applicable (see Sections 5.2.1 and 5.2.2), the displacements furnished by ESA are more conservative than those obtained by EDA. This is because curved bridges are straightened out in the ESA method. Therefore, 3-D effects that reduce the demand in the EDA method are not accounted for in the ESA method. Note that for ordinary standard bridges where ESA does not provide an adequate level of sophistication to estimate the dynamic behavior, EDA shall be used to estimate the displacement demands.

2.2.5 Scour, Liquefaction, and Lateral Spreading Considerations

Scour, liquefaction, and lateral spreading affect the seismic response of bridge structures. For bridges potentially subject to scour and/or liquefaction/lateral spreading, the effects of these conditions shall be considered in performing lateral analyses of the bridges. The lateral analyses shall be based on the probable maximum and minimum effects at the bridge site considering the following conditions:

(a) To establish the critical condition for shear design - Perform lateral analysis assuming the soil is not susceptible to liquefaction and/or scour, using non-liquefied soil springs.

(b) If a liquefiable soil layer exists at or near the ground surface - Perform lateral analysis using liquefied soil springs for the liquefiable layer and assume no soil springs for the soil above it. For liquefiable soil layers at deeper depths, specific design criteria developed as described in Condition (e) below shall be used.

(c) If the soil is susceptible to scour (degradation + contraction) - Perform lateral analysis assuming there are no soil springs for the scour layer.

(d) If a soil is susceptible to a combination of scour and liquefaction - Perform a simplified lateral analysis using liquefied soil springs for the liquefiable layer and ignoring all soil effects above the liquefiable layer and/or scour depth. Engineering judgment shall be used if a more comprehensive analysis using methods described in Condition (e) below is warranted.

(e) If a soil is susceptible to lateral spreading or a complex combination of scour and liquefaction – Perform lateral analysis based on a specific criteria developed for the project in accordance with MTD 20-11 and in consultation with Structure Hydraulics and Geotechnical Services.

3.1.1 Ductile/Seismic-critical Member Definition

All columns, Type I shafts, Pile/Shaft groups and Type II shafts in soft or liquefiable soils, pier walls, and pile/pile-extensions in slab bridges (designed and detailed to behave in a ductile manner) are designated as seismic-critical members. A ductile member is defined as any member that is intentionally designed to deform inelastically for several cycles without significant degradation of strength or stiffness under the demands generated by the Design Seismic Hazards. See Section 6.1 for the definition of Design Seismic Hazards.

Seismic-critical members may sustain damage during a seismic event without leading to structural collapse or loss of structural integrity. Other bridge members such as dropped bent cap beams, outrigger bent cap beams, "C" bent cap beams, and abutment diaphragm walls shall be designed and designated as seismic-critical if they will experience any seismic damage as determined by the Project Engineer and approved during Type Selection. All other components not designated as seismic-critical shall be designed to remain elastic in a seismic event (see capacity-protected components in Section 3.4).

Splices, where permitted in main flexural reinforcement and hoops of all ductile/seismic-critical members, shall meet the "ultimate splice" requirements identified in MTD 20-9.

All seismic critical members except pier walls shall be constructed with single or interlocking circular cores.

3.6.5.3 Minimum Vertical Reinforcement within Interlocking Hoops

The longitudinal rebars in the interlocking portion of the column should have a maximum spacing of 8 inches and need not be anchored in the footing or the bent cap unless deemed necessary for the flexural capacity of the column. The longitudinal rebar size in the interlocking portion of the column ("B" bars in Figure ~~3.9~~ 3.6.5.3-1) shall be chosen to correspond to the rebars outside the interlocking portion as follows:

Size of rebars used outside the interlocking portion (A)	Minimum size of rebars required inside the interlocking portion (B)
#10	#6
#11	#8
#14	#9
#18	#11

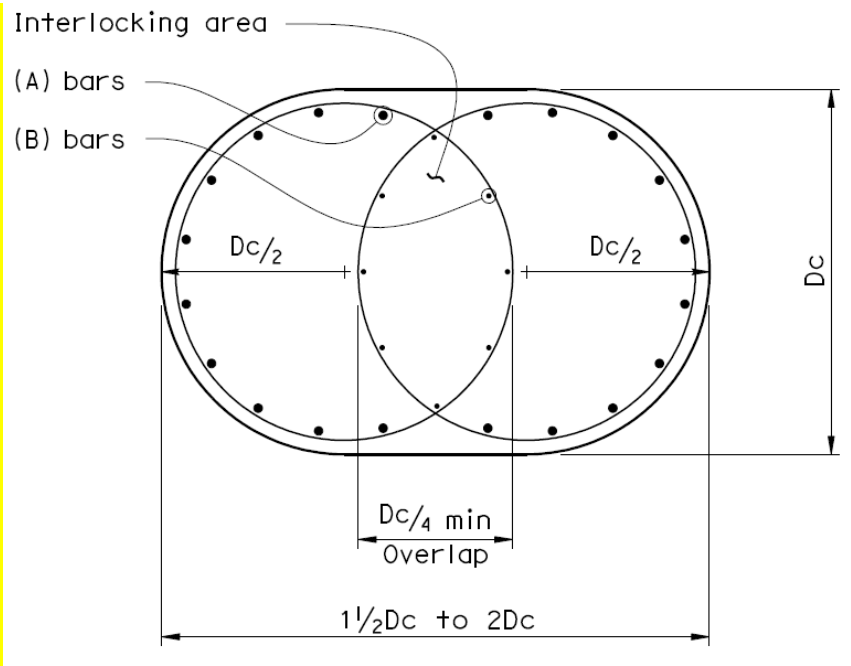

Figure ~~3.9~~ 3.6.5.3-1 Vertical Reinforcement within Interlocking Hoops

3.8.1 Lateral Reinforcement Inside the Analytical Plastic Hinge Length

The volume of lateral reinforcement typically defined by the volumetric ratio, ρ_s provided inside the plastic hinge length shall be sufficient to ensure the column or pier wall meets the performance requirements in

Section 4.1. The volumetric ratio, ρ_s for columns with circular or interlocking core sections is defined by Equation ~~3.31~~ 3.8.1-1.

$$\rho_s = \frac{4A_b}{D' s} \qquad \cancel{(3.31)} \quad (3.8.1\text{-}1)$$

For rectangular columns with ties and cross ties, the corresponding Equation for ρ_s, is:

$$\rho_s = \frac{A_v}{D_c^{'} s} \qquad (3.8.1\text{-}2)$$

where:

A_v = Sum of area of the ties and cross ties running in the direction perpendicular to the axis of bending

$D_c^{'}$ = Confined column cross-section dimension, measured out to out of ties, in the direction parallel to the axis of bending

3.8.2 Lateral ~~Column~~ Reinforcement ~~Inside the Plastic Hinge Region~~ in Ductile Members

The lateral reinforcement ~~required inside the plastic hinge region~~ shall meet the volumetric requirements specified in Section 3.8.1, the shear requirements specified in Section 3.6.3, and the spacing requirements in Section 8.2.5. The lateral reinforcement shall be either butt-~~welded~~spliced hoops or continuous spiral as specified in Table 3.8.2-1 (see also MTD 20-9 for detailed splicing requirements for hoops and spirals). [3] Note that butt-splicing is achieved by use of either welding or mechanical coupler. For pier walls, the lateral reinforcement shall consist of cross-ties as specified in Section 7.6.6.

Table 3.8.2-1 Lateral Reinforcement Requirements and Splice Types

Component	**Options for Lateral Reinforcement and Splice Type**	
	Hoops	**Spiral**
Column	Yes - Ultimate	Do not use
Type-II Shaft	Yes - Ultimate	Do not use
Cage Diameter ≥ 30 in. for: Type-I Shaft, Pile Group/Shaft Group in Soft/ Liquefiable Soil, Pile/Shaft and Extensions in Slab Bridges	Yes - Ultimate	Do not use
Cage Diameter < 30 in. for: Type-I Shaft, Pile Group/Shaft Group in Soft/ Liquefiable Soil, Pile/Shaft and Extensions in Slab Bridges	Yes - Ultimate	*

*Refer to MTD 20-9.

[3] The SDC development team has examined the longitudinal reinforcement buckling issue. The maximum spacing requirements in Section 8.2.5 should prevent the buckling of longitudinal reinforcement between adjacent layers of transverse reinforcement.

3.8.4 Lateral Reinforcement of Pier Walls

The lateral confinement of pier walls shall be comprised of cross ties. The total cross sectional tie area, A_{sh} required inside the plastic ~~end~~ hinge regions of pier walls shall be the larger of the volume of steel required in Section ~~3.8.2~~ 3.8.1 or in LRFD BDS, and shall meet the shear and spacing requirements specified in Sections 3.6.3 and 8.2.5, respectively. The lateral reinforcement outside the plastic hinge region shall satisfy the requirements of LRFD BDS.

5.2.1 Equivalent Static Analysis (ESA)

Equivalent Static Analysis (ESA) can be used to estimate displacement demands for structures where a more sophisticated dynamic analysis will not provide additional insight into behavior. ESA is best suited for structures or individual frames with well balanced spans and uniformly distributed stiffness where the response can be captured by a predominant translational mode of vibration.

The seismic load shall be assumed as an equivalent static horizontal force applied to individual frames. The total applied force shall be equal to the product of the ARS and the tributary weight. The horizontal force shall be applied at the vertical center of mass of the superstructure and distributed horizontally in proportion to the mass distribution.

In this analysis method, the initial stiffness of each bent is obtained from a pushover analysis of a simple model of the bent in the transverse direction or a bridge frame in the longitudinal direction (abutment stiffness is included in the model). The initial stiffness shall correspond to the slope of the line passing through the origin and the first structural plastic hinge on the force–displacement curve. The bent and/or the frame stiffness is then used to obtain the period, $T = 0.32\sqrt{(W/K)}$ (where W is the weight in kip and K is the stiffness in kip/in) in the transverse and longitudinal directions, respectively. The displacement demand corresponding to the period in each direction is then obtained from the design response spectrum.

5.2.2 Elastic Dynamic Analysis (EDA)

Elastic Dynamic Analysis (EDA) shall be used to estimate the displacement demands for structures where ESA does not provide an adequate level of sophistication to estimate the dynamic behavior. A linear elastic multi-modal spectral analysis utilizing the appropriate response spectrum shall be performed. The number of degrees of freedom (DOF) and the number of modes considered in the analysis shall be sufficient to capture at least 90 % mass participation in the longitudinal and transverse directions. A minimum of three elements per column and four elements per span shall be used in the linear elastic model.

In this analysis method, the normalized modal displacements at each DOF are multiplied by participation factors and spectral responses. These products are summed together using the Complete Quadratic Combination 3 (CQC3) method [23] – see Section 2.1.2-1, or Square Root of Sum of Squares (SRSS) procedure to obtain the maximum response at each DOF. The CQC3 method is preferred to the SRSS method for practical bridge design because it is a more computationally efficient way of finding the maximum response at each DOF.

EDA based on design spectral accelerations will likely produce stresses in some elements that exceed their elastic limit. However, it should be noted that Elastic Dynamic Analysis is used in the present context for purposes of estimating the demand displacement and not the design forces. ~~The presence of such stresses indicates nonlinear behavior. The engineer should recognize that forces generated by linear elastic analysis could vary considerably from the actual force demands on the structure.~~

Sources of nonlinear response that are not captured by EDA include the effects of the surrounding soil, yielding of structural components, opening and closing of expansion joints, and nonlinear restrainer and abutment behavior. EDA modal results shall be combined using the ~~complete quadratic combination~~ ~~(~~CQC3~~)~~ method.

Multi-frame analysis shall include a minimum of two boundary frames or one frame and an abutment beyond the frame under consideration. See Figure 5.2.2-1.

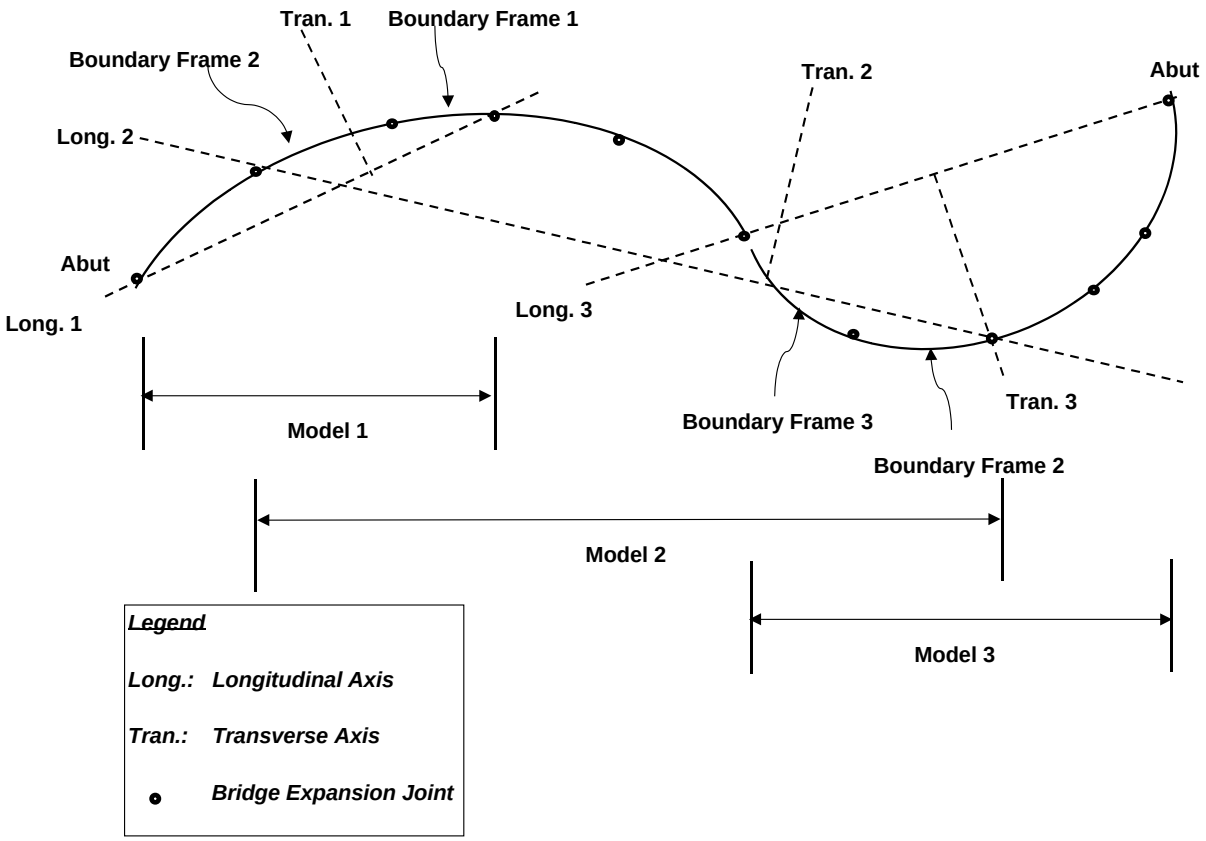

Figure 5.2.2-1 EDA Modeling Techniques

6.2.2.1 Competent Soil

Foundations surrounded by competent soil are capable of resisting ground shaking forces while experiencing small deformations. This type of performance characterizes a stiff foundation subsystem that usually has an insignificant impact on the overall dynamic response of the bridge and is typically ignored in the demand and capacity assessment. Foundations in competent soil can be analyzed and designed using a simple model that is based on assumptions consistent with observed response of similar foundations during past earthquakes. Good indicators that a soil is capable of producing competent foundation performance include the following:

- Standard penetration, upper layer (0-10 ft) $N = 20$ (Granular soils)
- Standard penetration, lower layer (10-30 ft) $N = 30$ (Granular soils)
- Undrained shear strength, $s_u > 1500$ psf (72 KPa) (Cohesive soils)
- Shear wave velocity, $v_s > 600\ {}^{\text{ft}}\!/_{\text{sec}}$ ($180\ {}^{\text{m}}\!/_{\text{sec}}$)
- Low potential for liquefaction, lateral spreading, or scour

N = The uncorrected blow count from the Standard Test Method for Penetration Test and Split–Barrel Sampling of Soil (ASTM D1586).

6.2.3.1 Foundation Strength

All foundations shall be designed to resist the plastic hinging overstrength capacity of the column or pier wall, M_o defined in Section 4.3.1 and the associated plastic shear V_o.[7] See Section 7.7 for additional foundation design guidelines.

[7] ~~An exception is permitted for pile cap and spread footing foundations in competent soil, where the foundation may be designed for M_p in lieu of M_o. Designing for a smaller column capacity is justified because of additional capacity inherent to these types of foundation systems that is not typically included in the foundation capacity assessment.~~ Footnote deleted.

7.1.1 Balanced Stiffness

~~It is strongly recommended that~~ ~~t~~The ratio of effective stiffness between any two bents within a frame or between any two columns within a bent shall satisfy Equations ~~7.1~~ 7.1.1-1 and 7.1.1-2~~. It is strongly recommended that~~ ~~t~~The ratio of effective stiffness between adjacent bents within a frame or between adjacent columns within a bent shall satisfy Equations ~~7.2~~ 7.1.1-3 and 7.1.1-4. An increase in superstructure mass along the length of the frame should be accompanied by a reasonable increase in column stiffness, see Figure 7.1.1-1. For variable width frames the tributary mass supported by each bent or column shall be included in the stiffness comparisons as specified by Equations ~~7.1(b)~~ 7.1.1-2 and ~~7.2(b)~~ 7.1.1-4. The simplified analytical technique for calculating frame capacity described in Section 5.5 is only permitted if either Equations ~~7.1(a)~~ 7.1.1-1 ~~&~~ and ~~7.2(a)~~ 7.1.1-3 or Equations ~~7.1(b)~~ 7.1.1-2 ~~&~~ and ~~7.2(b)~~ 7.1.1-4 are satisfied.

Table 7.1.1-1 Column/Bent Stiffness Ratios for Frames

Column/Bent	**Stiffness Ratio for**	
	Constant Width Frames	Variable Width Frames
For any 2 Bents in a frame **or** any 2 Columns in a Bent	$k_i^e / k_j^e \geq 0.5$ (~~7.1a~~ 7.1.1-1)	$2 \geq \dfrac{k_i^e / m_i}{k_j^e / m_j} \geq 0.5$ (~~7.1b~~ 7.1.1-2)
For adjacent bents in a frame **or** adjacent Columns in a Bent	$k_i^e / k_j^e \geq 0.75$ (~~7.2a~~ 7.1.1-3)	$1.33 \geq \dfrac{k_i^e / m_i}{k_j^e / m_j} \geq 0.75$ (~~7.2b~~ 7.1.1-4)

k_i^e = The smaller effective bent or column stiffness

k_j^e = The larger effective bent or column stiffness

m_i = Tributary mass of column or bent i

m_j = Tributary mass of column or bent j

The following considerations shall be taken into account when calculating effective stiffness: framing effects, end conditions, column height, percentage of longitudinal and transverse column steel, column diameter,

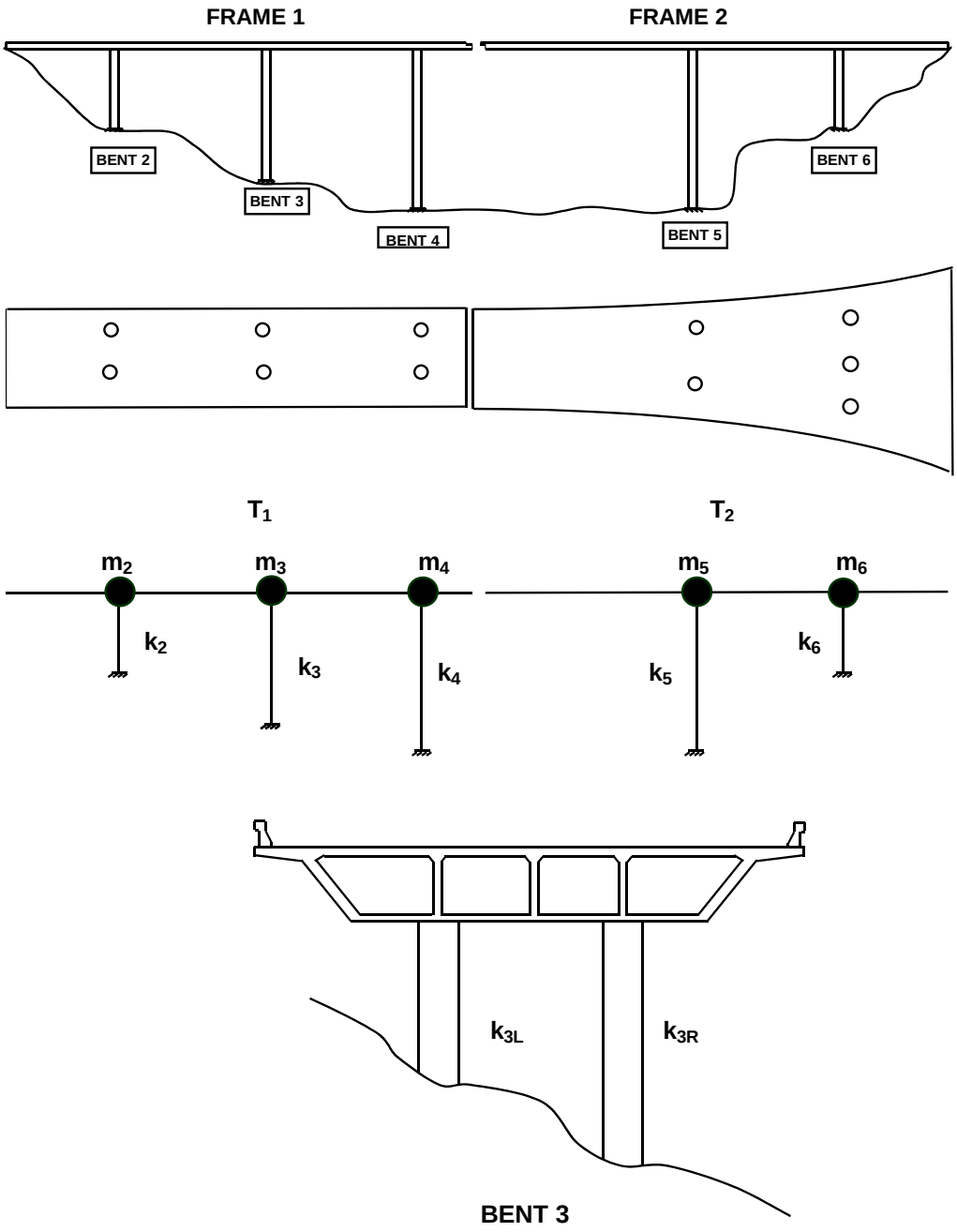

Figure 7.1.1-1 Balanced Stiffness

and foundation flexibility. Some of the consequences of not meeting the relative stiffness ~~recommendations~~ requirements defined by Equations ~~7.1 and 7.2~~ 7.1.1-1 to 7.1.1-4 include:

- Increased damage in the stiffer elements
- An unbalanced distribution of inelastic response throughout the structure
- Increased column torsion generated by rigid body rotation of the superstructure

7.1.2 Balanced Frame Geometry

~~It is strongly recommended that~~ ~~t~~The ratio of fundamental periods of vibration for adjacent frames in the longitudinal and transverse direction shall satisfy Equation 7.1.2-1.

$$T_i / T_j \geq 0.7 \qquad (7.1.2\text{-}1)$$

T_i = Natural period of the less flexible frame

T_j = Natural period of the more flexible frame

The consequences of not meeting the fundamental period requirements of Equation 7.1.2-1 include a greater likelihood of out-of-phase response between adjacent frames leading to large relative displacements that increase the probability of longitudinal unseating and collision between frames at the expansion joints. The collision and relative transverse translation of adjacent frames will transfer the seismic demand from one frame to the next, which can be detrimental to the stand-alone capacity of the frame receiving the additional seismic demand.

7.2.1.1 Effective Superstructure Width

The effective width of superstructure resisting longitudinal seismic moments, B_{eff} is defined by Equation ~~7.4~~ 7.2.1.1-1. The effective width for open soffit structures (e.g. T-Beams & I- Girders) is reduced because they offer less resistance to the torsional rotation of the bent cap. The effective superstructure width can be increased ~~at~~ for cross-sections away from the bent cap by using a 45° ~~angle~~ spread from the cap face ~~as you move away from the bent cap~~ until the full section becomes effective (see Figures 7.2.1.1-1). On skewed bridges, the effective width shall be projected normal to the girders with one end of the width intersecting the bent face such that one half of the width lies on either side of the column centerline ~~where the centerline of girder intersects the face of the bent cap~~. See Figure ~~7.2~~ 7.2.1.1-1.

$$B_{eff} = \begin{cases} D_c + 2 \times D_s & \text{Box girders \& solid superstructures} \\ D_c + D_s & \text{Open soffit superstructures} \end{cases} \qquad (\cancel{7.4}\ 7.2.1.1\text{-}1)$$

Additional superstructure width can be considered effective if the designer verifies the torsional capacity of the cap can distribute the rotational demands beyond the effective width stated in Equation ~~7.4~~ 7.2.1.1-1.

If the effective width cannot accommodate enough steel to satisfy the overstrength requirements of Section 4.3.1, the following actions may be taken:

- Thicken the soffit and/or deck slabs
- Increase the resisting section by widening the column*
- Haunch the superstructure
- Add additional columns

* The benefit of using wider columns must be carefully weighed against the increased joint shear demands and larger plastic hinging capacity.

Isolated or lightly reinforced flares shall be ignored when calculating the effective superstructure width. See Section 7.6.5 for additional information on flare design.

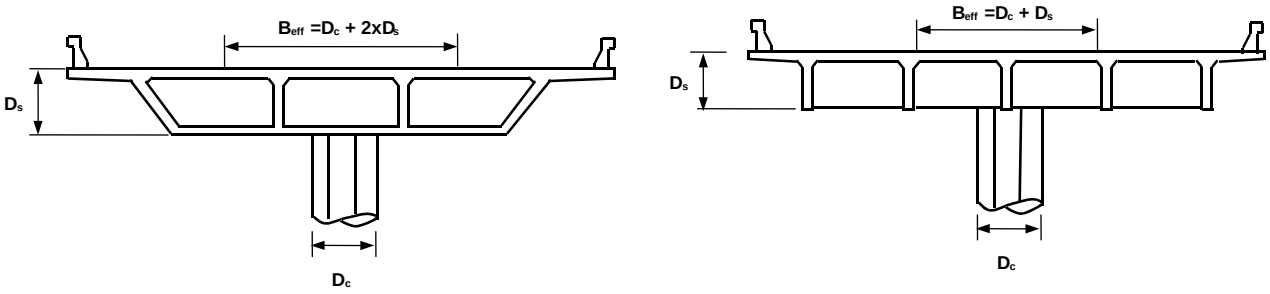

(A)

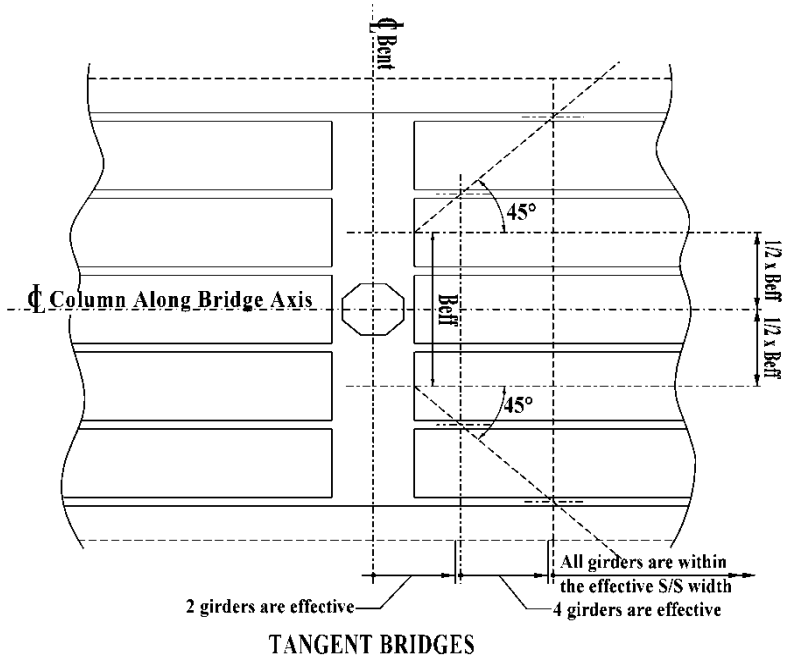

(B)

Figure ~~7.2~~ 7.2.1.1-1 Effective Superstructure Width

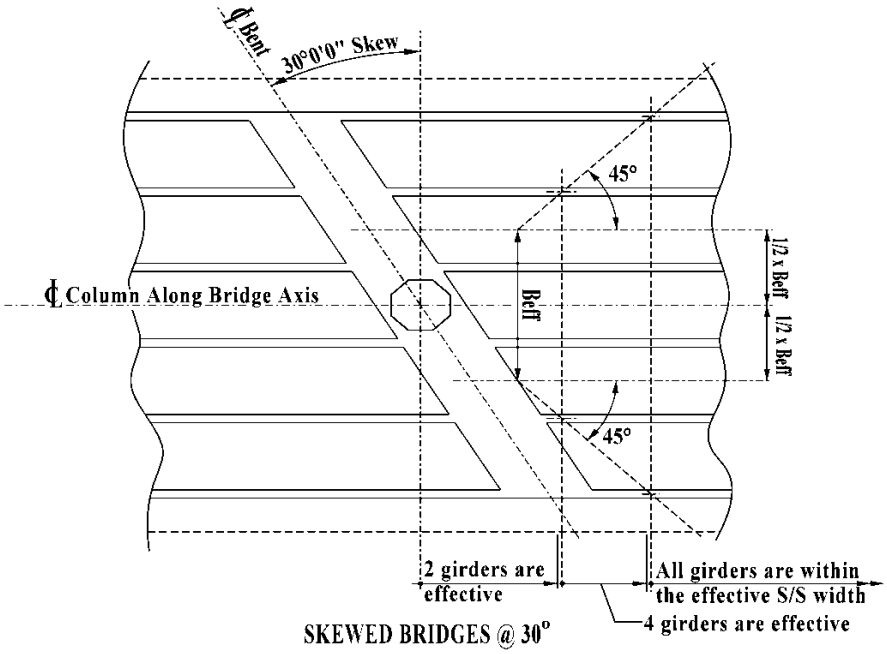

(C)

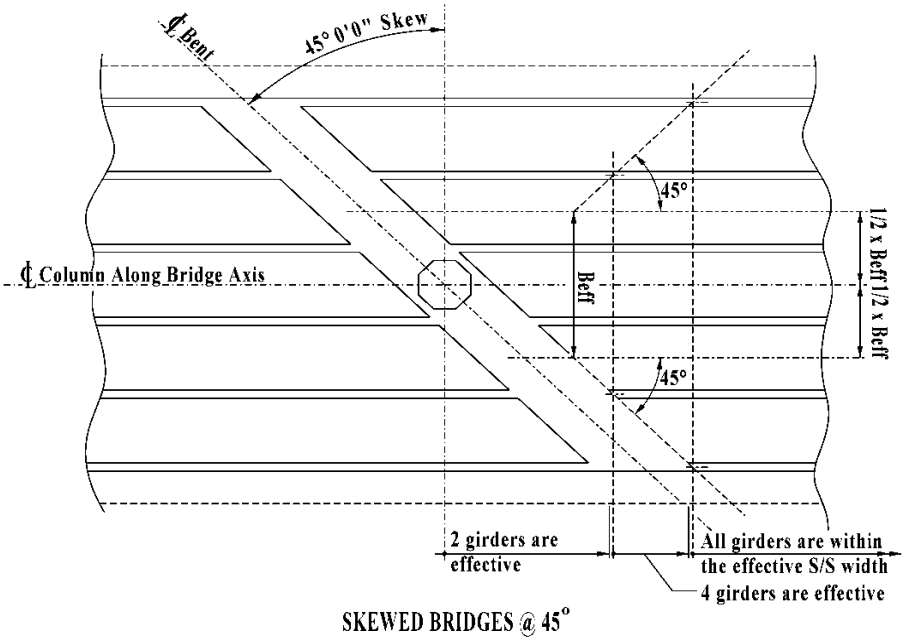

(D)

Figure ~~7.2~~ 7.2.1.1-1 Effective Superstructure Width (contd.)

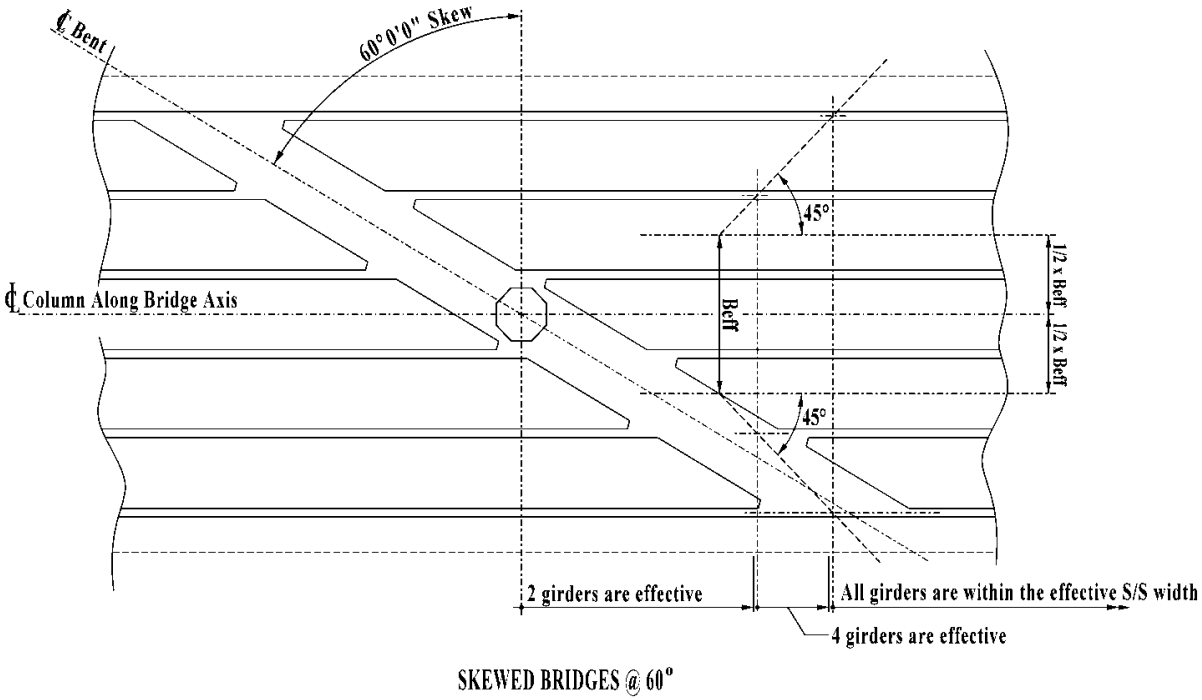

(E)

Figure ~~7.2~~ 7.2.1.1-1 Effective Superstructure Width (contd.)

7.2.2 Vertical Acceleration

If vertical acceleration is considered, per Section 2.1.3, a separate analysis of the superstructure's nominal capacity shall be performed based on a uniformly applied vertical force equal to 25% of the dead load applied upward and downward, see Figure ~~7.3~~ 7.2.2-1. The superstructure at seat type abutments is assumed to be pinned in the vertical direction, up or down. The superstructure flexural capacity shall be calculated, based only on mild reinforcement distributed evenly across the top and bottom slabs. The effects of dead load, primary prestressing and secondary prestressing shall be ignored. The mild reinforcement shall be spliced with "service level" couplers as defined in Section 8.1.3, and is considered effective in offsetting the mild reinforcement required for other load cases. Lap splices equal to two times the standard lap may be substituted for the "service splices," provided the laps are placed away from the critical zones (mid-spans and near supports) and shown on the plans.

The longitudinal side reinforcement in the girders, if vertical acceleration is considered per Section 2.1, shall be capable of resisting 125% of the dead load shear at the bent face by means of shear friction. This enhanced longitudinal side reinforcement shall extend continuously for a minimum of $2.5D_s$ beyond the face of the bent cap.

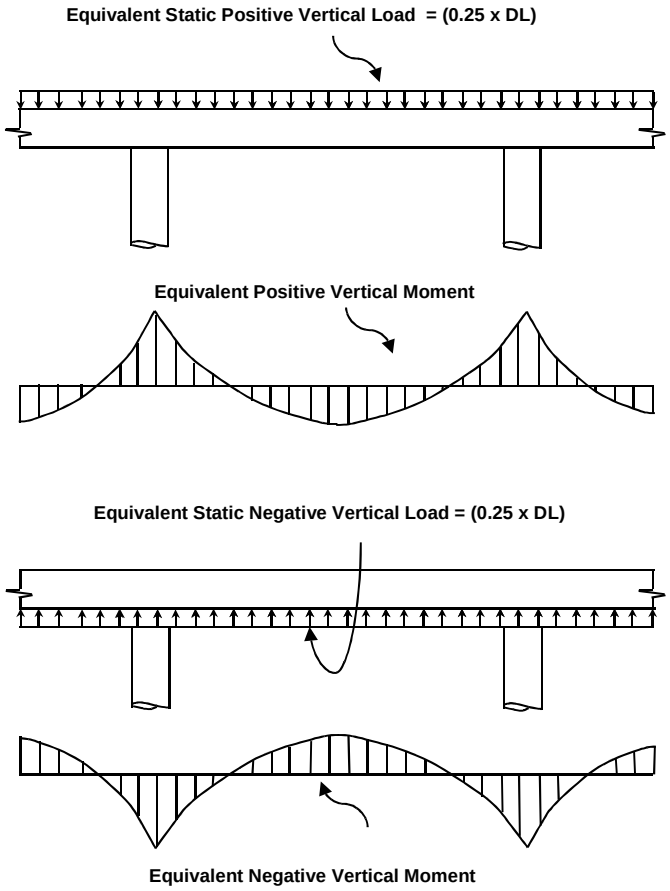

Figure ~~7.3~~ 7.2.2-1 Equivalent Static Vertical Loads & Moments

7.2.5 Hinges

In-span hinges of box girders are typically designed for non-seismic loads and checked for a combination of seismic plus dead load. Hinges shall be designed to have sufficient vertical load carrying capacity to accommodate the dead load reaction of the superstructure placed at the maximum longitudinal displacement demand as the two bridge frames move out-of-phase as described in Section 7.2.5.1.

7.2.5.1 Longitudinal Hinge Performance

In-span ~~Intermediate~~ hinges are necessary for accommodating longitudinal expansion and contraction resulting from prestress shortening, creep, shrinkage and temperature variations. The hinge allows each frame to vibrate independently during an earthquake. Large relative displacements can develop if the vibrations of the frames are out-of-phase as described in SDC 7.2.5.3 through 7.2.5.5. Sufficient seat width must be provided to prevent unseating.

7.2.5.3 Frames Meeting the Requirements of Section 7.1.2

All frames including balanced frames or frames with small differences in mass and/or stiffness will exhibit some out-of-phase response. The objective of meeting the fundamental period ~~recommendations~~ requirements between adjacent frames presented in Section 7.1.2 is to reduce the relative displacements and associated force demands attributed to out-of-phase response.

7.2.5.4 Hinge Seat Width for Frames Meeting the Requirements of Section 7.1.2

Enough hinge seat width shall be available to accommodate the anticipated thermal movement, prestress shortening, creep, shrinkage, and the relative longitudinal earthquake displacement demand between the two frames calculated by Equation 7.2.5.4-2, see Figure 7.2.5.4-1. The seat width normal to the centerline of bearing shall be calculated by Equation 7.2.5.4-1 but not less than 24 inches.

$$N_H \geq \Delta_{p/s} + \Delta_{cr+sh} + \Delta_{temp} + \Delta_{eq} + 4in \qquad (7.2.5.4\text{-}1)$$

N_H = Minimum seat width normal to the centerline of bearing. Note that for bridges skewed at an angle θ_{sk}, the minimum seat width measured along the longitudinal axis of the bridge is ($N_H / \cos\theta_{sk}$)

$\Delta_{p/s}$ = Displacement attributed to pre-stress shortening

Δ_{cr+sh} = Displacement attributed to creep and shrinkage

Δ_{temp} = Displacement attributed to thermal expansion and contraction

Δ_{eq} = Relative longitudinal earthquake displacement demand

$$\Delta_{eq} = \sqrt{\left(\Delta_D^1\right)^2 + \left(\Delta_D^2\right)^2} \qquad (7.2.5.4\text{-}2)$$

Δ_D^i = The larger earthquake displacement demand for each frame calculated by the global or stand-alone analysis

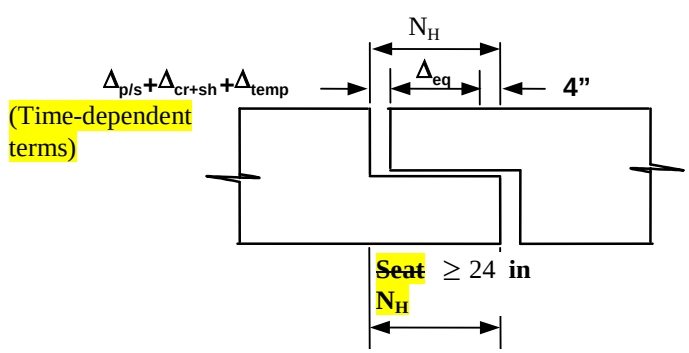

Figure 7.2.5.4-1 Seat Width Requirements

7.2.6 Hinge Restrainers

Restrainers shall not be used to reduce the required seat width at new bridge hinges. ~~A satisfactory method for designing the size and number of restrainers required at expansion joints is not currently available.~~ Adequate seat width shall be provided to prevent unseating as a primary requirement. ~~Hinge restrainers are considered secondary members to prevent unseating.~~ Hinge restrainers are not mandatory but may be useful in reducing bridge damage and/or excessive movement during small to moderate earthquakes. Restrainers are desirable in widenings where the existing bridge has already been retrofitted with restrainers.

Restrainers design should not be based on the force demands predicted by Elastic Dynamic Analysis (EDA). BDA 14-1 provides an approximate method for designing the size and number of restrainers required at expansion joints. If the designer elects to use restrainers, ~~T~~the following guidelines shall be followed: ~~when designing and detailing hinge restrainers~~.

- ~~Restrainers design should not be based on the force demands predicted by EDA~~
- A ~~restrainer unit shall be placed in each alternating cell at all hinges (minimum of two restrainer units at each hinge).~~ minimum of two restrainer units are required at each hinge and shall be symmetrically located at the exterior bays. Where possible, restrainer units shall be placed in alternating cells.
- Restrainers shall be detailed to allow for easy inspection and replacement
- Restrainer layout shall be symmetrical about the centerline of the superstructure
- Restrainer systems shall incorporate an adequate gap for expansion

Yield indicators are required on all cable restrainers, see Standard Detail Sheet ~~XS 12-57.1~~ XS 7-090 for details. See MTD 20-3 for material properties pertaining to high strength rods (ASTM A722 Uncoated High-Strength Steel Bar for Prestressing Concrete) and restrainer cables (~~ASTM A633 Zinc Coated Steel Structural Wire Rope~~ Federal Specification RR-W-410 Wire Rope and Strand).

7.4.3 Joint Description

The following types of joints are considered T joints for joint shear analysis:

- Integral interior joints of multi-column bents in the transverse direction
- All integral column/superstructure joints in the longitudinal direction
- Exterior column joints for box girder superstructures if the cap beam extends beyond the joint far enough to develop the longitudinal cap reinforcement.

Any exterior column joint that satisfies Equation ~~7.10b~~ 7.4.3-1 shall be designed as a Knee joint.[8] For Knee joints, it is also required that the main bent cap top and bottom bars be fully developed from the inside face of the column and extend as closely as possible to the outside face of the cap (see Figure 7.4.3-1).

$$\cancel{S < \max(D_c, l_d)} \qquad S < D_c \qquad (\cancel{7.10b}\ \ 7.4.3\text{-}1)$$

where:

S = Cap beam short stub length, defined as the ~~minimum~~ distance from the exterior girder edge at soffit to the face of column measured along the bent centerline ~~intersection of the bent centerline and face of the column~~ (see Figure ~~7.10c~~ 7.4.3-1),

D_c = Column dimension measured along the centerline of bent~~, and~~

~~l_d = Development length of the main bent cap reinforcement~~

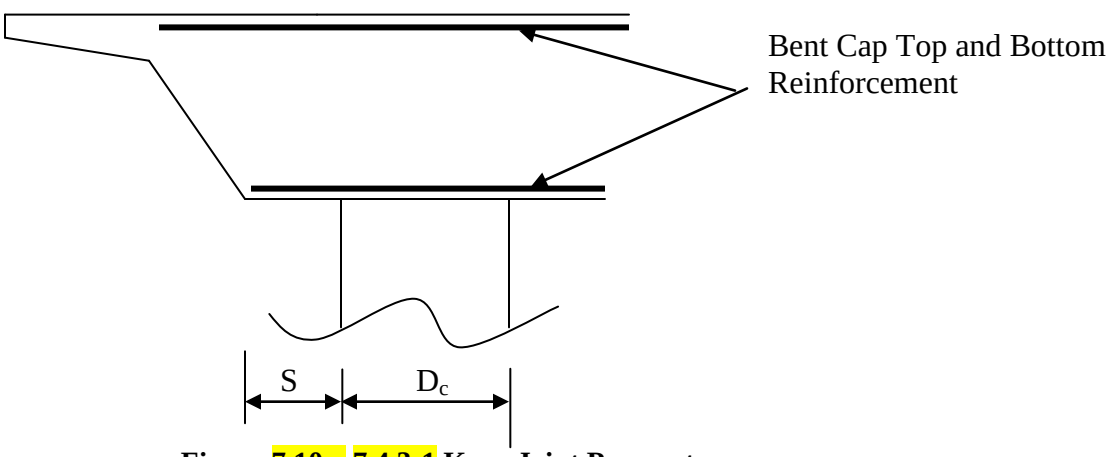

Figure ~~7.10c:~~ 7.4.3-1 Knee Joint Parameters

[8] It may be desirable to pin the top of the column to avoid knee joint requirements. This eliminates the joint shear transfer through the joint and limits the torsion demand transferred to the cap beam. However, the benefits of a pinned exterior joint should be weighed against increased foundation demands and the effect on the frame's overall performance.

7.4.4.2 Minimum Joint Shear Reinforcement

If the principal tension stress p_t does not exceed $3.5 \times \sqrt{f_c'}$ psi ($0.29 \times \sqrt{f_c'}$ MPa) the minimum joint shear reinforcement, as specified in Equation ~~7.18~~ 7.4.4.2-1, shall be provided. This joint shear reinforcement may be provided in the form of column transverse steel continued into the bent cap. No additional joint reinforcement is required. The volumetric ratio of transverse column reinforcement ρ_s continued into the cap shall not be less than the value specified by Equation ~~7.18~~ 7.4.4.2-1.

$$\rho_{s,\min} = \frac{3.5 \times \sqrt{f_c'}}{f_{yh}} \quad \text{(psi)} \qquad\qquad \rho_{s,\min} = \frac{0.29 \times \sqrt{f_c'}}{f_{yh}} \quad \text{(MPa)} \qquad (\cancel{7.18}\ \ 7.4.4.2\text{-}1)$$

The reinforcement shall be in the form of spirals, hoops, or intersecting spirals or hoops as specified in Section 3.8.2.

If the principal tension stress p_t exceeds $3.5 \times \sqrt{f_c'}$ psi ($0.29 \times \sqrt{f_c'}$ MPa) the joint shear reinforcement specified in Section 7.4.4.3 or 7.4.5.1 is required.

7.4.5.1 Knee Joint Shear Reinforcement

For joint shear reinforcement design, two cases of a knee joint may be identified (see Equations ~~7.23~~ 7.4.5.1-1 - 7.4.5.1-2 and Figure ~~7.10c~~ 7.4.5.1-1):

Case 1: $S < \frac{D_c}{2}$ (~~7.23b~~ 7.4.5.1-1)

Case 2: $\cancel{\frac{D_c}{2} \le S < \max\left(D_c\ , l_d\right)}$ $\frac{D_c}{2} \le S < D_c$ (~~7.23c~~ 7.4.5.1-2)

Knee joint shear reinforcement details for straight ($0 - 20^o$ skew) and skew (> 20° skew) bridge configurations are similar to those shown in Figures ~~7.8~~ 7.4.4.3-2 and ~~7.10~~ 7.4.4.3-4, respectively.

The designer shall ensure that the main bent cap top and bottom bars are fully developed from the inside face of the column and extend as closely as possible to the outside face of the bent cap (see Figure 7.4.3-1).

7.4.5.1

…

G) Transverse Reinforcement

Transverse reinforcement in the joint region shall consist of hoops with a minimum reinforcement ratio as specified in Equations ~~7.23j~~ 7.4.5.1-9 - ~~7.23l~~ 7.4.5.1-11.

$$\cancel{\rho_s = 0.6 \times \frac{\rho_l D_c}{l_{ac,provided}}} \quad \rho_s = \frac{0.76 A_{st}}{D_c l_{ac,provided}}$$ (For Case 1 Knee joint) (~~7.23j~~ 7.4.5.1-9)

$$\rho_s = 0.4 \times \frac{A_{st}}{l^2_{ac,provided}}$$ (For Case 2 Knee joint, Integral bent cap) (~~7.23k~~ 7.4.5.1-10)

$$\rho_s = 0.6 \times \frac{A_{st}}{l^2_{ac,provided}}$$ (For Case 2 Knee joint, Non-integral bent cap) (~~7.23l~~ 7.4.5.1-11)

where:

$l_{ac,provided}$ = Actual length of column longitudinal reinforcement embedded into the bent cap

~~ρ_l = Area ratio of longitudinal column reinforcement~~

A_{st} = total area of column longitudinal reinforcement anchored in the joint

D_c = diameter or depth of column in the direction of loading

The column transverse reinforcement extended into the bent cap may be used to satisfy this requirement. For interlocking cores, ρ_s shall be ~~based on ρ_l~~ calculated on the basis of A_{st} and D_c of each core (for Case 1 knee joints) and on area of reinforcement A_{st} of each core (for Case 2 knee joints). All vertical column bars shall be extended as close as possible to the top bent cap reinforcement.

7.6.2 Analytical Plastic Hinge Length

The analytical plastic hinge length, L_p is the equivalent length of column over which the plastic curvature is assumed constant for estimating plastic rotation. Equations 7.6.2.1-1, 7.6.2.2-1, and 7.6.2.3-1 are applicable to the plastic hinges occurring in the substructure/foundation elements identified in Subsections 7.6.2.1 to 7.6.2.3.

~~7.6.2 (a)~~ ~~Columns & Type II Shafts:~~ *7.6.2.1 Case (A)*

- Plastic hinge at ends of columns supported on footings or Type II shafts
- Plastic hinge at the boundaries of steel pipe in columns/shafts with steel pipes (casing or CISS)

$$L_p = \begin{cases} 0.08L + 0.15 f_{ye} d_{bl} \geq 0.3 f_{ye} d_{bl} & \text{(in, ksi)} \\ 0.08L + 0.022 f_{ye} d_{bl} \geq 0.044 f_{ye} d_{bl} & \text{(mm, MPa)} \end{cases} \qquad (\cancel{7.25}\ \ 7.6.2.1\text{-}1)$$

~~7.6.2 (b)~~ ~~Horizontally Isolated Flared Columns~~ *7.6.2.2 Case (B)*

- Plastic hinge at the top of horizontally-isolated flared columns
- Plastic hinge at ends of steel-jacketed columns

$$L_p = \begin{cases} G + 0.3 f_{ye} d_{bl} & \text{(in, ksi)} \\ G + 0.044 f_{ye} d_{bl} & \text{(mm, MPa)} \end{cases} \qquad (\cancel{7.26}\ \ 7.6.2.2\text{-}1)$$

G = The gap between the isolated flare and ~~the~~ soffit of the bent cap (for a flared column), or the gap between the steel jacket and soffit of the bent cap or top of the footing (for a jacketed column)

If the column is flared only in one direction, use Equation 7.6.2.1-1 to calculate L_p for the "non-flared" direction.

~~7.6.2 (c)~~ ~~Non-cased Type I Pile Shafts:~~ *7.6.2.3 Case (C)*

- Plastic hinge in Type I shafts
- Plastic hinge occurring at least a distance, D_c away from boundaries of steel pipe in columns/shafts with steel pipes (casing or CISS)

$$L_p = D^* + 0.08H_{o-\max} \qquad (\cancel{7.27}\ \ 7.6.2.3\text{-}1)$$

D^* = Diameter for circular shafts or the least cross section dimension for oblong shafts.

7.6.6 Pier Walls

Pier walls shall be designed to perform in a ductile manner longitudinally (about the weak axis), and to remain essentially elastic in the transverse direction (about the strong axis). The large difference in stiffness between the strong and weak axis of pier walls leads to complex foundation behavior, see Section 7.7.

Pier walls shall be constructed with cross ties having a minimum hook angle of 135° on one end and a 90° hook on the opposite end. The hook dimensions shall conform to the requirements for seismic hooks as specified in Section 13 of Caltrans Bridge Design Details. The cross ties shall be placed so that the 90° and 135° hooks of adjacent ties alternate, horizontally and vertically.

7.6.7 Column Key Design

~~Column~~ ~~s~~Shear keys in hinged column bases shall be designed for the axial and shear forces associated with the column's overstrength moment M_o^{col} including the effects of overturning. The area of interface shear key reinforcement, A_{sk} may be calculated using the following modified forms of the LRFD-BDS shear transfer-shear friction equation:

$$A_{sk} = \frac{1.2 \times (F_{sk} - 0.25P)}{f_y} \qquad \text{if } P \text{ is compressive} \qquad (7.6.7\text{-}1)$$

$$A_{sk} = \frac{1.2 \times (F_{sk} + P)}{f_y} \qquad \text{if } P \text{ is tensile} \qquad (7.6.7\text{-}2)$$

where:

F_{sk} = Shear force associated with the column overstrength moment, including overturning effects (kip)

P = Absolute value of the net axial force normal to the shear plane (kip).

The value of P to be used in the above equations is that corresponding to the column with the lowest axial load (if P is compressive) or greatest axial load (if P is tensile), considering the effects of overturning. However, the same amount of interface shear steel A_{sk}, shall be provided in all column hinges of the bent. The area of dowel reinforcement provided in the hinge to satisfy the column key design shall not be less than 4 in^2.

It should be noted that the factor of safety of 1.2 used in the above equations is intended to account for possible variability in surface preparation and construction practices. Also, the equations assume the use of normal weight concrete placed against a clean and intentionally roughened concrete surface. Therefore, the designer shall indicate on the plans that the receiving concrete surface for the hinge must be intentionally roughened to an amplitude of 0.25 in.

The hinge shall be proportioned such that the area of concrete engaged in interface shear transfer, A_{cv} satisfies the following equations:

$$A_{cv} \geq \frac{4.0 \times F_{sk}}{f_c^{'}} \qquad (7.6.7\text{-}3)$$

$$A_{cv} \geq 0.67 \times F_{sk} \qquad (7.6.7\text{-}4)$$

In addition, the area of concrete section used in the hinge must be enough to meet the axial resistance requirements as provided in LRFD-BDS Article 5.7.4.4., based on the column with the greatest axial load.

The key reinforcement shall be located as close to the center of the column as possible to minimize developing a force couple within the key reinforcement. Concrete-filled ~~S~~steel pipe or solid bar sections may be used in lieu of reinforcing steel to relieve congestion and reduce the moment generated within the key. However, for columns in net tension, additional means must be employed to address uplift. Any appreciable moment generated by the key steel should be considered in the footing design.

Adequate thickness of the expansion joint filler shall be provided around the column shear key to accommodate the maximum column rotation during a seismic event without crushing the edge of the column concrete against the footing.

7.7.1 ~~Footing Design~~ Pile Foundation Design

The lateral, vertical, and rotational capacity of the foundation shall exceed the respective demands. The size and number of piles and the pile group layout shall be designed to resist LRFD BDS Service and Strength Limit States moments, shears, and axial loads, and the moment demand induced by the column plastic hinging mechanism. Equations ~~7.28~~ 7.7.1-1 and ~~7.29~~ 7.7.1-2 define lateral shear and moment equilibrium in footings about the point A of Figure 7.7.1-1 when the column reaches its overstrength moment capacity.

$$V_o^{col} - \sum V_{(i)}^{pile} - R_S = 0 \qquad (\cancel{7.28}\ 7.7.1\text{-}1)$$

$$\circlearrowright + \sum M_A = 0:$$

$$M_o^{col} + V_o^{col} \times D_{ftg} + \sum M_{(i)}^{pile} - R_S \times (D_{ftg} - D_{R_S}) - \sum (C_{(i)}^{pile} \times d_{(i)}) + \sum (T_{(i)}^{pile} \times d_{(i)}) = 0 \qquad (\cancel{7.29}\ 7.7.1\text{-}2)$$

$d_{(i)}$ = Distance from pile (i) to the center line of the column

$C_{(i)}^{pile}$ = Axial compression demand on pile (i)

D_{ftg} = Depth of footing

D_{R_s} = Depth of resultant soil resistance measured from the top of footing

$M_{(i)}^{pile}$ = The moment demand generated in pile (i); $M_{(i)}^{pile} = 0$ if the pile is pinned to the footing

R_s = Estimated resultant soil passive resistance on the leading face of the footing

$T_{(i)}^{pile}$ = Axial tension demand on pile (i)

$V_{(i)}^{pile}$ = Lateral shear resistance provided by pile (i)

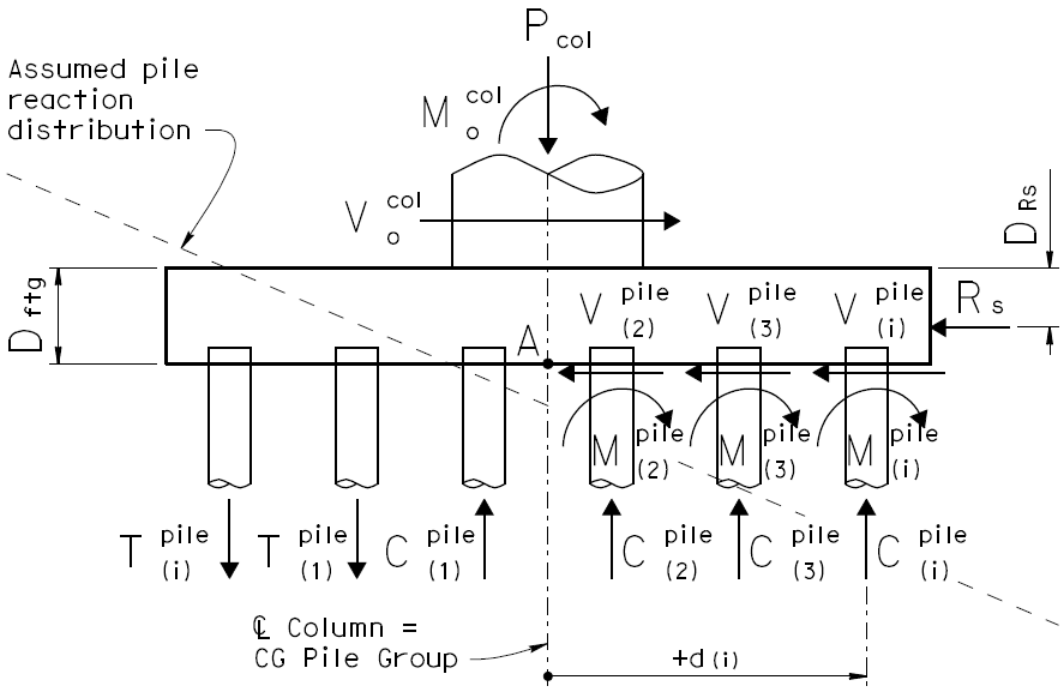

Pile shears and moments shown on right side only, left side similar
Effects of footing weight and soil overburden not shown

Figure ~~7.11~~ 7.7.1-1 Footing Force Equilibrium

7.7.1.1 Pile Foundations in Competent Soil

~~The lateral, vertical, and rotational capacity of the foundation shall exceed the respective demands. The size and number of piles and the pile group layout shall be designed to resist service level moments, shears, and axial loads and the moment demand induced by the column plastic hinging mechanism. Equations 7.28 and 7.29 define lateral shear and moment equilibrium in the foundation when the column reaches its overstrength capacity, see Figure 7.11.~~

$$\cancel{V_o^{col} - \sum V_{(i)}^{pile} - R_S = 0 \qquad (7.28)}$$

$$\cancel{M_o^{col} + V_o^{col} \times D_{ftg} + \sum M_{(i)}^{pile} - R_S \times (D_{ftg} - D_{R_S}) - \sum (C_{(i)}^{pile} \times c_{(i)}) - \sum (T_{(i)}^{pile} \times c_{(i)}) = 0 \qquad (7.29)}$$

~~$c_{(i)}$ = Distance from pile (i) to the center of gravity of the pile group in the X or Y direction~~
~~$C_{(i)}^{pile}$ = Axial compression demand on pile (i)~~
~~D_{ftg} = Depth of footing~~

~~D_{R_s} = Depth of resultant soil resistance measured from the top of footing~~

~~$M_{(i)}^{pile}$ = The moment demand generated in pile (i), $M_{(i)}^{pile}$ = 0 if the piles are pinned to the footing~~

~~R_s = Estimated resultant soil resistance on the end of the footing~~

~~$T_{(i)}^{pile}$ = Axial tension demand on pile (i)~~

~~$V_{(i)}^{pile}$ = Lateral shear resistance provided by pile (i)~~

The design of pile foundations in competent soil ~~can be greatly~~ is simplified ~~if we~~ ~~rely on~~ due to the inherent reserve capacity ~~that is not directly incorporated in~~ of the foundation. ~~assessment~~. ~~For example, typically pile axial resistance exceeds the designed nominal resistance and axial load redistributes to adjacent piles when an individual pile's geotechnical capacity is exceeded.~~ Competent soil limits the lateral translation and rotation of the pile group, resulting in low moment and shear demands in the piles. Therefore, both pinned and fixed pile connections are assumed to develop zero moment in this analysis.

Footings in competent soils may be designed using ~~T~~the simplified foundation model illustrated in Figure ~~7.12~~ 7.7.1.1-1. The simplified foundation model is based on the following assumptions. A more sophisticated analysis may be warranted if project specific parameters invalidate any of these assumptions:

- The passive resistance of the soil along the leading edge of the footing and upper 4 to 8 pile diameters combined with the friction along the sides and bottom of the pile cap is sufficient to resist the column overstrength shear, V_o^{col} .
- The pile cap is infinitely rigid, its width is entirely effective, and the pile loads can be calculated from the static ~~equations of~~ equilibrium equations.
- ~~The pile group's nominal moment resistance~~ The nominal rotational capacity of the pile group is limited to the capacity available when any individual pile reaches its nominal axial resistance.
- Group effects for pile footings surrounded by competent soil ~~and~~ with a minimum of three diameters center-to-center pile spacing are relatively small and can be ignored.
- ~~Piles designed with a pinned connection to the pile cap will not transfer significant moment to the pile cap.~~
- ~~In a competent soil, the moment at the top of the pile is relatively small and may be ignored.~~
- ~~However, in a marginal or liquefiable soil, the effects of the plastic moment at the top of the pile, M_p^{pile} should be considered (see equations 7.31b and 7.31c).~~
- The pile layout is symmetric about the X and Y axes and all piles have the same cross-sectional area
- ~~Equation 7.30 defines the axial demand on an individual pile when the column reaches its plastic hinging capacity based on force equilibrium in conjunction with the previously stated assumptions. A similar model can be used to analyze and design spread footing foundations that are surrounded by competent soil.~~

Based on the above assumptions, the axial demand on an individual pile when the column reaches its overstrength moment capacity may be approximated by:

$$\left.\begin{matrix} C_{(i)}^{pile} \\ T_{(i)}^{pile} \end{matrix}\right\} = \frac{P_p}{N_p} \pm \frac{M_{d(y)}^{ftg} \times c_{x(i)}}{I_{p.g.(y)}} \pm \frac{M_{d(x)}^{ftg} \times c_{y(i)}}{I_{p.g.(x)}} \qquad (7.30)$$

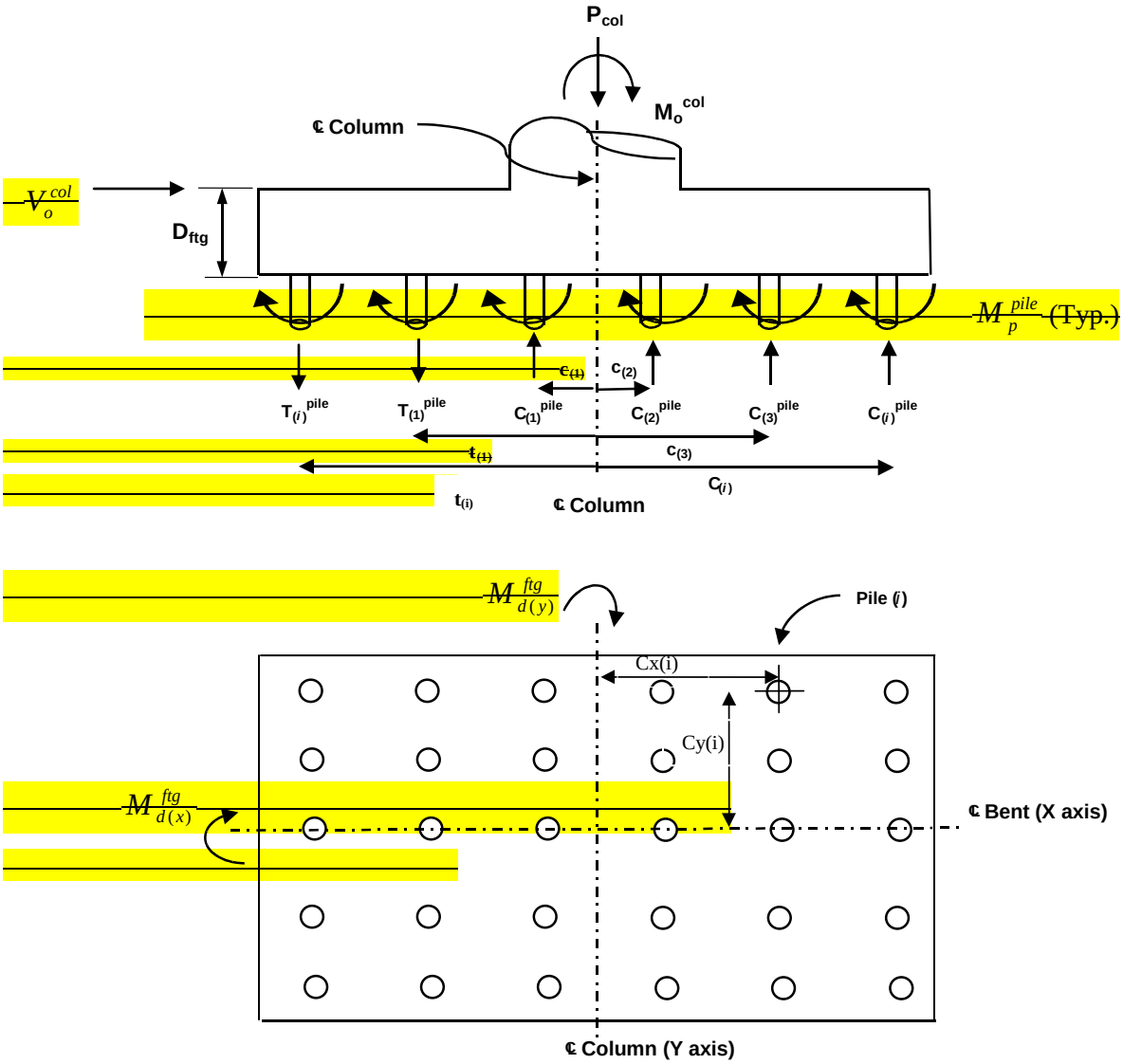

Figure 7.12 Simplified Pile Model for Foundations in Competent Soil

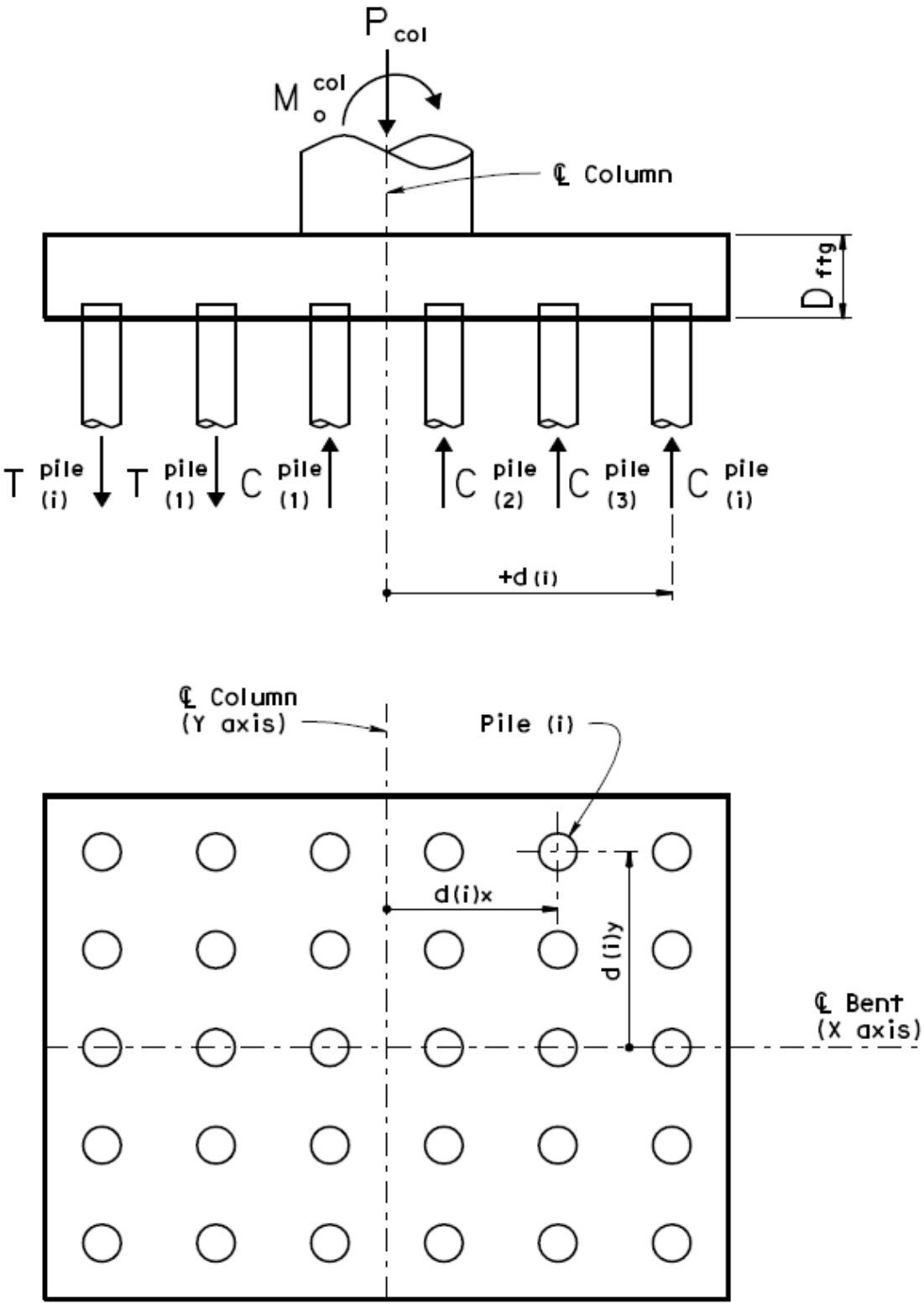

Figure ~~7.12~~ 7.7.1.1-1 Simplified Pile Model for Foundations in Competent Soil

$$\left.\begin{matrix} C_{(i)}^{pile} \\ T_{(i)}^{pile} \end{matrix}\right\} = \frac{P_p}{N_p} \pm \frac{\lambda M_{o(y)}^{col} \times d_{(i)x}}{I_{p.g.(y)}} \pm \frac{\lambda M_{o(x)}^{col} \times d_{(i)y}}{I_{p.g.(x)}} \qquad (7.7.1.1\text{-}1)$$

where:

λ = Load redistribution factor

= 1.0 for pile cap design

= 0.83 for pile design

$$I_{p.g.(x)} = \sum n \times d_{(i)y}^2 \qquad (\cancel{7.31a}\ 7.7.1.1\text{-}2)$$

$$I_{p.g.(y)} = \sum n \times d_{(i)x}^2 \qquad (\cancel{7.31a}\ 7.7.1.1\text{-}3)$$

$$\cancel{M_{d(y)}^{ftg} = M_{o(y)}^{col} + V_{o(x)}^{col} \times D_{ftg} + N_p \times M_{p(y)}^{pile} \qquad (7.31b)}$$

$$\cancel{M_{d(x)}^{ftg} = M_{o(x)}^{col} + V_{o(y)}^{col} \times D_{ftg} + N_p \times M_{p(x)}^{pile} \qquad (7.31c)}$$

~~$I_{p.g.(x),(y)}$ = Moment of inertia of the pile group about the X or Y axis as defined in Equation 7.31~~

$I_{p.g.(x)}$ = Moment of inertia of the pile group about the X axis as defined in Equation ~~7.31a~~ 7.7.1.1-2

$I_{p.g.(y)}$ = Moment of inertia of the pile group about the Y axis as defined in Equation ~~7.31a~~ 7.7.1.1-3

~~$M_{d(x),(y)}^{ftg}$ = The component of the moment demand on the footing about the X or Y axis~~

~~$M_{d(x)}^{ftg}$ = The component of the moment demand on the footing at point A about the X axis~~

~~$M_{d(y)}^{ftg}$ = The component of the moment demand on the footing at point A about the Y axis~~

~~$M_{o_{(x),(y)}}^{col}$ = The component of the column overstrength moment capacity about the X or Y axis~~

$M_{o_{(x)}}^{col}$ = The component of the column overstrength moment capacity about the X axis

$M_{o_{(y)}}^{col}$ = The component of the column overstrength moment capacity about the Y axis

N_p = Total number of piles in the pile group

n = The total number of piles at distance $c_{(i)}$ from the centroid of the pile group

P_p = The total axial load on the pile group including column axial load (dead load + EQ load), footing weight, and overburden soil weight

~~$M^{pile}_{p(x),(y)}$ = The component of the pile plastic moment capacity at the pile cap connection due to total average axial load about the X or Y axis~~

~~$V^{col}_{o(x),(y)}$ = The component of column overstrength shear demand along the X or Y axis~~

~~Note that Equations 7.30, 7.31a, 7.31b, and 7.31c are used by the Caltrans WinFOOT Computer Program.~~

A similar model can be used to analyze and design spread footing foundations that are surrounded by competent soil. It is, however, not recommended to support single column bents on spread footings.

7.7.1.2 Pile Foundations in Poor and Marginal Soils

In poor and marginal soils, including those determined by the geotechnical engineer to be soft and/or liquefiable, the pile cap rotation may be accompanied by significant lateral displacements. The designer shall verify that the lateral and vertical capacities of the foundation system and its components exceed the demand imposed by the column(s). If the deformation demand does not create plastic hinging in the foundation, the foundation components shall be designed as capacity protected components (see Section 3.4). If the deformation demand creates plastic hinging in the foundation, the foundation components shall be designed as seismic-critical members (see Sections 3.1 and 4.1).

Concrete piles founded in poor soil, or in marginal soil determined by the geotechnical engineer to be soft and/or liquefiable, shall have a minimum confinement of #4 spiral reinforcement. Standard Plans' concrete piles with wire confinement may be used in marginal soil which is not soft and/or liquefiable provided plastic hinging does not occur in the piles.

7.7.1.2~~.1A~~ Lateral and Vertical Design

~~In marginal soils the pile cap rotation may not dominate the lateral stiffness of the foundation, as is expected in competent soil, possibly leading to significant lateral displacements. The designer shall verify that the lateral capacity of the foundation exceeds the lateral demand transmitted by the column, including the pile's capability of maintaining axial load capacity at the expected lateral displacement.~~

Pile foundations in marginal soil that is not soft and/or liquefiable shall be designed using the same equation as for pile foundations in competent soil, i.e, Equation 7.7.1.1-1.

Pile foundations in poor soil and in soft/liquefiable marginal soil may be designed using the simplified model shown in Figure 7.7.1.2A-1. The model is based on the following assumptions. If project specific parameters invalidate any of these assumptions, a more sophisticated ~~A~~ lateral analysis of pile ~~footings~~

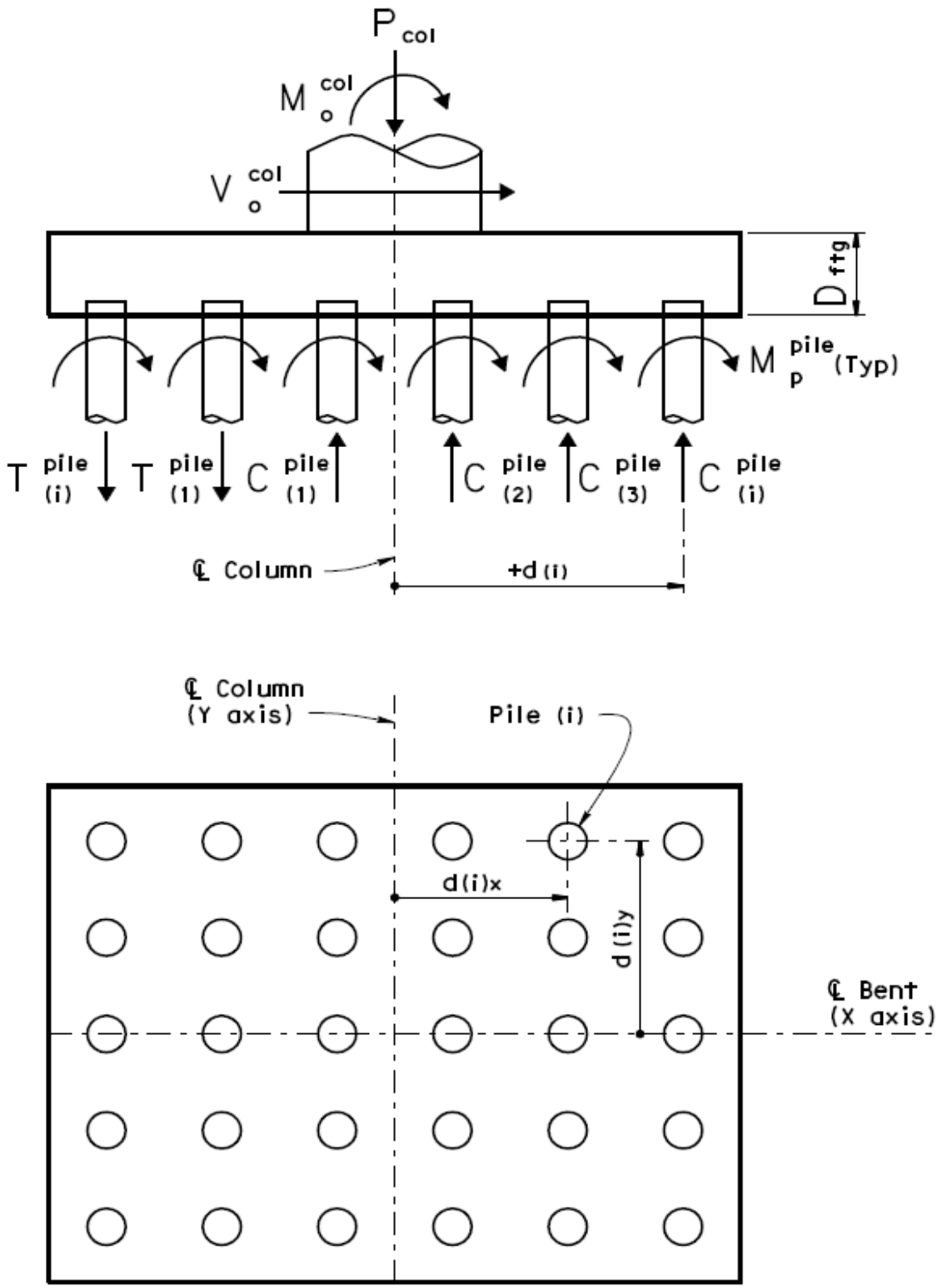

Figure 7.7.1.2A-1 Simplified Pile Model for Foundations in Poor Soil and Soft/liquefiable Marginal Soil

foundations may be performed using a ~~more sophisticated~~ computer program such as LPILE, GROUP, SAP2000, or WFRAME.

- The pile cap is infinitely rigid, its width is entirely effective, and the pile loads can be calculated from the static equilibrium equations
- Piles are assumed to reach the plastic moment, M_p^{pile} at the connection to footings (see Figure 7.7.1.2A-1)

On the basis of these assumptions, the demand on an individual pile when the column reaches its overstrength moment capacity is approximated by:

$$\left.\begin{matrix} C_{(i)}^{pile} \\ T_{(i)}^{pile} \end{matrix}\right\} = \frac{P_p}{N_p} \pm \frac{(M_{o(y)}^{col} + V_{o(x)}^{col} \times D_{ftg} + N_p \times M_{p(y)}^{pile}) \times d_{(i)x}}{I_{p.g.(y)}} \pm \frac{(M_{o(x)}^{col} + V_{o(y)}^{col} \times D_{ftg} + N_p \times M_{p(x)}^{pile}) \times d_{(i)y}}{I_{p.g.(x)}} \quad (7.7.1.2A\text{-}1)$$

where:

$I_{p.g.(x)}$ and $I_{p.g.(y)}$ are as defined in Equations 7.7.1.1-2 and 7.7.1.1-3, respectively.

$M_{p(x)}^{pile}$ = The component of the pile plastic moment capacity at the pile cap connection due to total average axial load about the X

$M_{p(y)}^{pile}$ = The component of the pile plastic moment capacity at the pile cap connection due to total average axial load about the Y axis

$V_{o(x)}^{col}$ = The component of column overstrength shear demand along the X axis

$V_{o(y)}^{col}$ = The component of column overstrength shear demand along the Y axis

The designer should select the most cost effective strategy for increasing the lateral resistance of the foundation when required. The following methods are commonly used to increase lateral foundation capacity.

- ~~Deepen the footing/pile cap to increase passive resistance~~
- Increase the amount of fixity at the ~~pile/footing~~ pile-to-footing connection and strengthen the upper portion of the pile
- Use a more ductile pile type that can develop soil resistance at larger pile deflections
- Add additional piles or use larger piles

7.7.1.7 Use of "T" Headed Stirrups and Bars in Footings

The type~~s~~ of hooks used for stirrups in footings depends on the column fixity condition and the level of principal tensile stress. To assist engineers with the proper choice of hooks for footing stirrups, the following stirrup configurations are defined: (a) Stirrups with 180-degree hooks at the top and 90-degree hooks at the bottom, (b) Stirrups with 180-degree hooks at the top and T-heads at the bottom, and (c) Fully lapped stirrups with 180-degree hooks at opposite ends.

- For pinned-column footings, stirrup type (a) or (b) or (c) may be used (See Figure ~~7.13c~~ 7.7.1.7-1).
- For fixed-column footings, stirrup type (b) or (c) shall be used if the principal tensile stress demand (see Section 7.7.1.4) in the footing exceeds $3.5\sqrt{f_c^{'}}$ (psi) [$0.29\sqrt{f_c^{'}}$ (MPa)]. The region around the column bounded by a distance of $D_c/2$ from the face of the column is recommended for the stirrup placement (See Figure ~~7.13d~~ 7.7.1.7-2). If the principal tensile stress demand is less than $3.5\sqrt{f_c^{'}}$ (psi) [$0.29\sqrt{f_c^{'}}$ (MPa)], stirrup type (a) or (b) or (c) may be used.

The designer may avoid the use of "T" heads by increasing the depth of the footing and reducing the principal stress demand below $3.5\sqrt{f_c^{'}}$ (psi) [$0.29\sqrt{f_c^{'}}$ (MPa)].

The designer shall ensure development of the main footing bars beyond the centerline of piles and provide a 90-degree hook or "T" head, if development of the bar is needed.

The bar size in the footing mats along with the principal tensile stress level and the spacing of the mat are all critical factors in the choice of the stirrup bar size. Use of #18 bars in footings needs a careful review as it affects the choice of the stirrup bar and hook detailing to fit the mat.

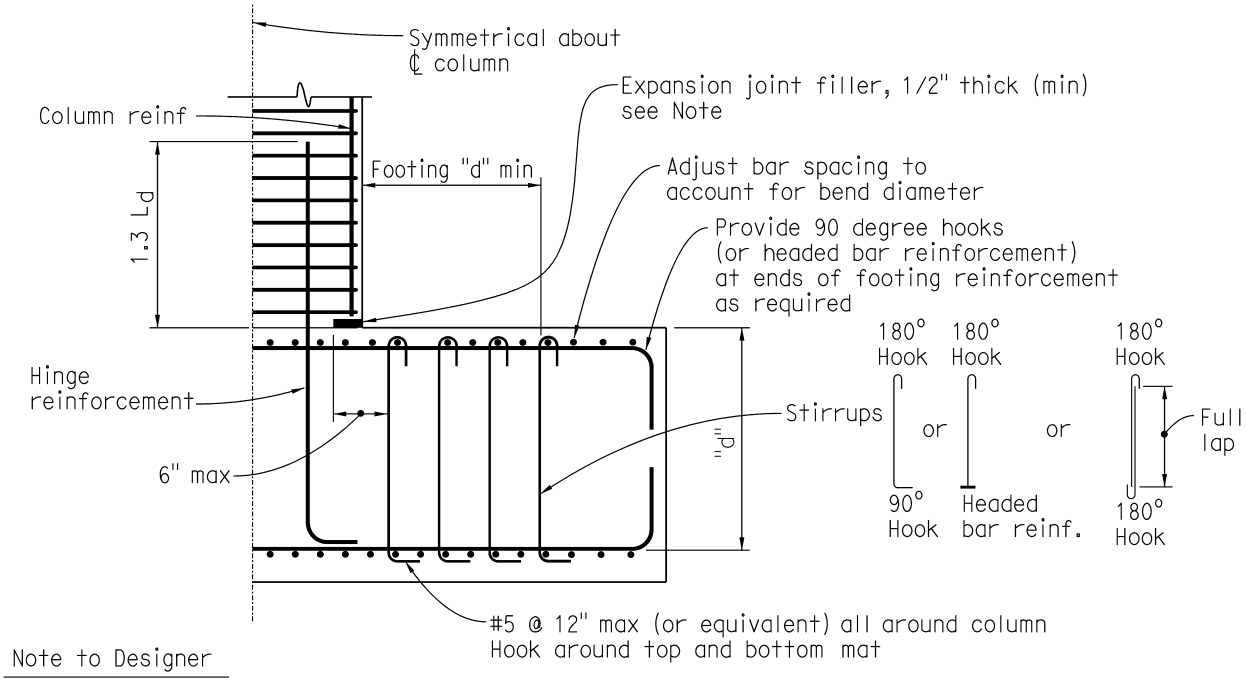

Figure ~~7.13c~~ 7.7.1.7-1 Footing Reinforcement – Pinned Column

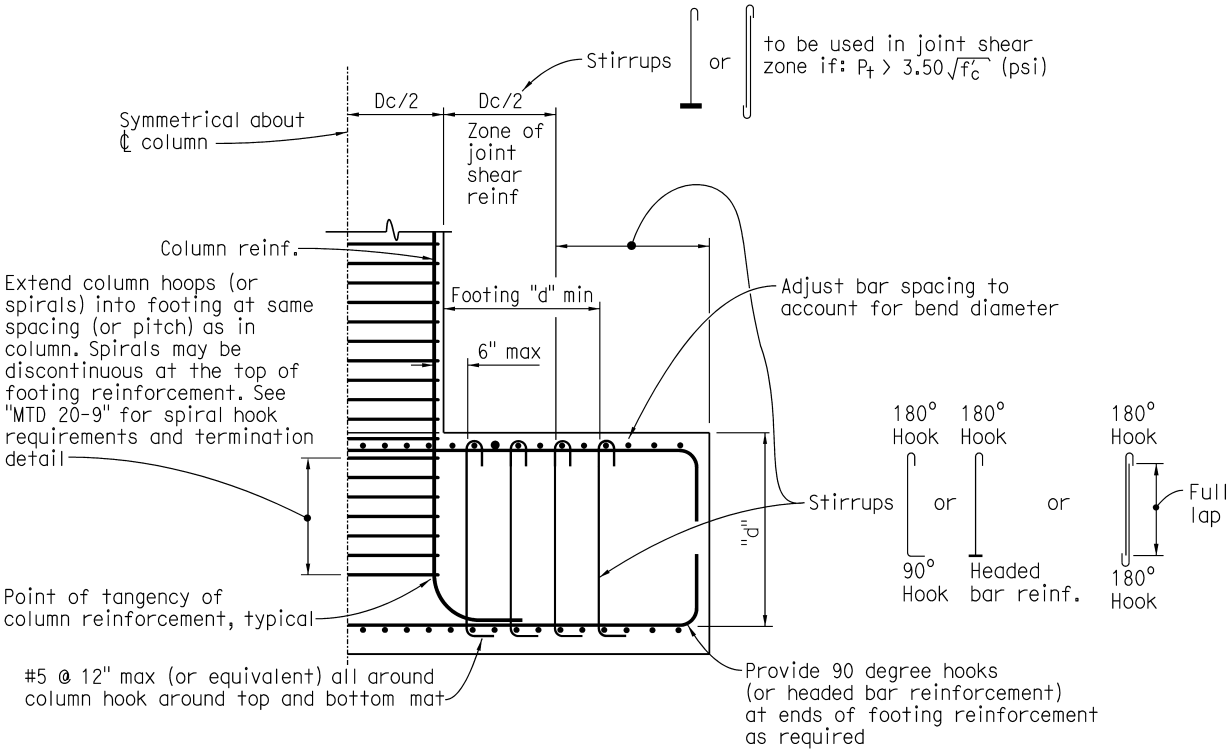

Figure ~~7.13d~~ 7.7.1.7-2 Footing Reinforcement – Fixed Column

7.7.2 ~~Pier Wall Pile Foundations~~ Pier Wall Foundation Design

~~Typically, it is not economical to design pier wall pile foundations to resist the transverse seismic shear. Essentially elastic response of the wall in the strong direction will induce large foundation demands that may cause inelastic response in the foundation. If this occurs, piles will incur some damage from transverse demands, most likely near the pile head/pile cap connection. Methods for reducing the inelastic damage in pier wall pile foundations include:~~

- ~~Utilizing ductile pile head details~~
- ~~Pinning the pier wall-footing connection in the weak direction to reduce the weak axis demand on the piles that may be damaged by transverse demands~~
- ~~Pinning the pier wall-soffit connection, thereby limiting the demands imparted to the substructure~~
- ~~Use a ductile system in lieu of the traditional pier wall. For example, columns or pile extensions with isolated shear walls~~

~~The method selected to account for or mitigate inelastic behavior in the pier wall foundations shall be discussed at the Type Selection Meeting.~~

7.7.2.2 Pier Wall Pile Foundations

Typically, it is not economical to design pier wall pile foundations to resist the transverse seismic shear. Essentially elastic response of the wall in the strong direction will induce large foundation demands that may cause inelastic response in the foundation. If this occurs, piles will incur some damage from transverse demands, most likely near the pile head/pile cap connection. Methods for reducing the inelastic damage in pier wall pile foundations include:

- Utilizing ductile pile head details
- Pinning the pier wall-footing connection in the weak direction to reduce the weak axis demand on the piles that may be damaged by transverse demands
- Pinning the pier wall-soffit connection, thereby limiting the demands imparted to the substructure
- Use a ductile system in lieu of the traditional pier wall. For example, columns or pile extensions with isolated shear walls

The method selected to account for or mitigate inelastic behavior in the pier wall foundations shall be discussed at the Type Selection Meeting.

7.7.3.2 Flexure and Shear Demand/Capacity Requirements for Type II ~~Pile~~ Shafts

The distribution of moment along a pile shaft is dependent upon the geotechnical properties of the surrounding soil and the stiffness of the shaft. To ensure the formation of plastic hinges in columns and to minimize the damage to type II shafts, a factor of safety of 1.25 shall be used in the flexural design of Type II shafts. This factor also accommodates the uncertainty associated with estimates on soil properties and stiffness. Since nominal, instead of expected material properties are used for shear design, the factor of safety of 1.25 shall not apply to the shear design of Type II shafts to avoid excessive conservatism (see Figure 7.7.3.2-1). The expected nominal moment capacity, $M_{ne}^{type\ II}$, at any location along the shaft, must be at least 1.25 times the moment demand generated by the overstrength moment and shear applied at the base of the column (see Figure 7.7.3.2-1). Increasing the pile shaft's ~~capacity~~ size to meet the overstrength requirement of the column will affect the moment demand in the shaft. This needs to be considered and may require iteration to achieve the specified overstrength.

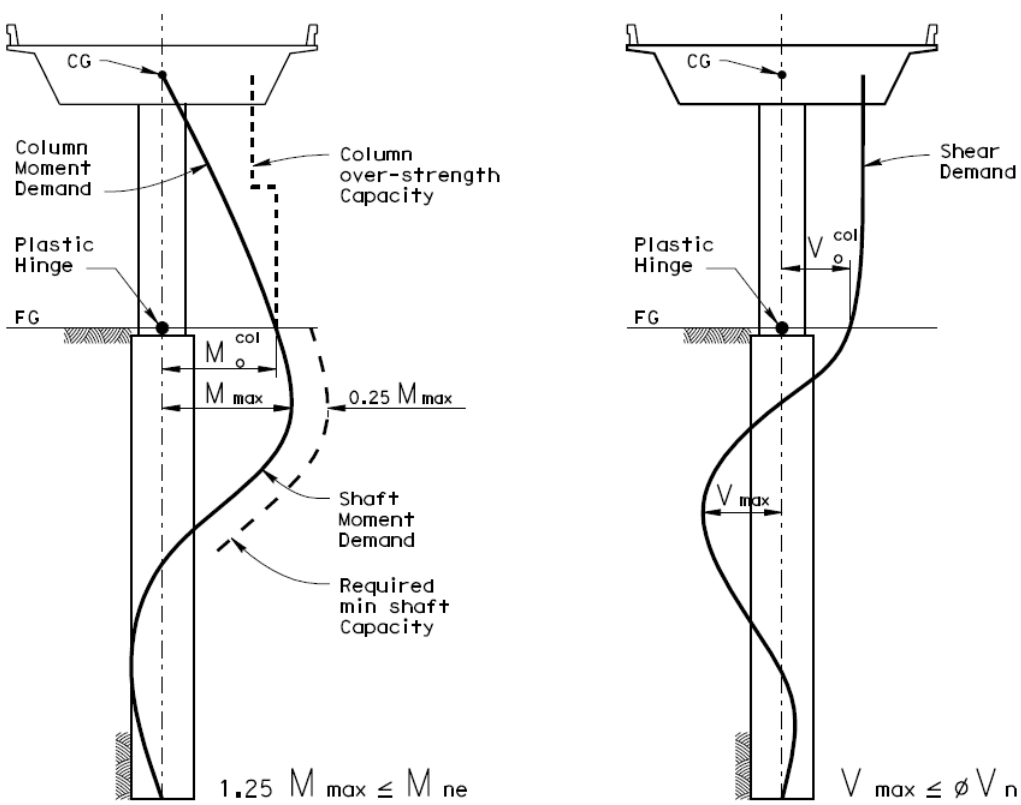

Figure 7.7.3.2-1 Typical Moment and Shear Diagrams for Type II Shafts

7.7.4 Pile and Shaft Extensions

When ~~P~~piles and shafts ~~extensions~~ are utilized above ground, ~~must perform in a ductile manner and meet~~ the entire member shall have a minimum confinement of #4 spiral reinforcement. The column section shall meet the ductility requirements of column elements specified in Sections 3.1 and 4.1. All requirements of Type I and Type II shafts/piles shall also, be satisfied. Standard Plans concrete piles or specially designed concrete piles not meeting the above requirements shall not be used as pile/shaft extension.

7.8.3 Abutment Seat Width

Sufficient abutment seat width shall be available to accommodate the anticipated thermal movement, prestress shortening, creep, shrinkage, and the relative longitudinal earthquake displacement, see Figure 7.8.3-1. The seat width normal to the centerline of bearing shall be calculated by Equation ~~7.46~~ 7.8.3-1but shall not be less than 30 inches (760 mm).

$$N_A \geq \Delta_{p/s} + \Delta_{cr+sh} + \Delta_{temp} + \Delta_{eq} + 4\,in \qquad (\cancel{7.46}\ 7.8.3\text{-}1)$$

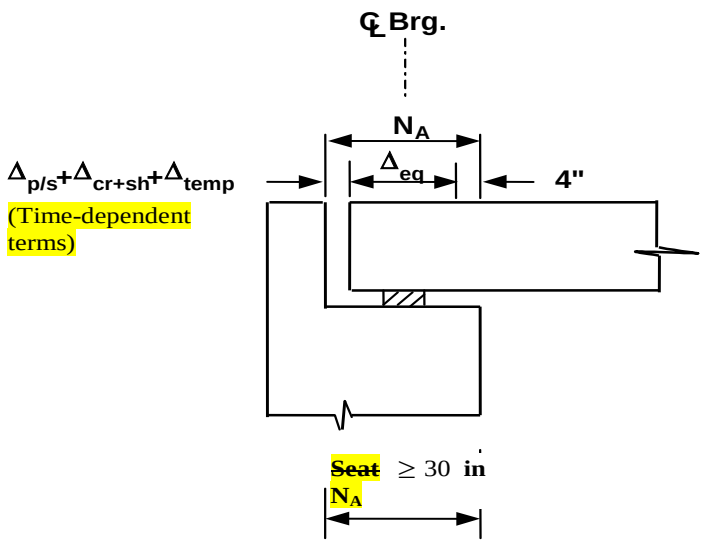

Figure ~~7.15~~ 7.8.3-1 Abutment Seat Width Requirements

N_A = Abutment seat width normal to the centerline of bearing. Note that for abutments skewed at an angle θ_{sk}, the minimum seat width measured along the longitudinal axis of the bridge is ($N_A / \cos\theta_{sk}$)

$\Delta_{p/s}$ = Displacement attributed to pre-stress shortening

Δ_{cr+sh} = Displacement attributed to creep and shrinkage

Δ_{temp} = Displacement attributed to thermal expansion and contraction

Δ_{eq} = ~~The largest relative earthquake displacement demand between the superstructure and the abutment calculated by the global or stand-alone analysis.~~ Displacement demand, Δ_D for the adjacent frame. Displacement of the abutment is assumed to be zero.

The "Seat Width" requirements due to ~~the~~ service load considerations (~~AASHTO~~ LRFD BDS ~~Bridge Design Specifications~~) shall also be met.

7.8.4.1 Abutment Shear Key Reinforcement

Abutment shear key reinforcement may be designed using Equations ~~7.48~~ 7.8.4.1A-1 and ~~7.52~~ 7.8.4.1B-1 (referred to herein as the Isolated shear key method) or Equations ~~7.49~~ 7.8.4.1A-2, ~~7.50~~ 7.8.4.1A-3, ~~7.51~~ 7.8.4.1A-4, and ~~7.53~~ 7.8.4.1B-2 (referred to herein as the Non-isolated shear key or Shear friction design method). Shear key construction using normal weight concrete placed monolithically is assumed.

Equations ~~7.48~~ 7.8.4.1A-1 and ~~7.52~~ 7.8.4.1B-1 and the reinforcement details shown in Figure ~~7.16~~ 7.8.4.1-1(A) are based on experimental tests on exterior shear keys conducted at UCSD [18]. This reinforcing detail (Figure ~~7.16~~ 7.8.4.1-1(A) was developed to ensure that exterior shear keys fail through a well-defined horizontal plane that is easily repaired after an earthquake~~, and is recommended for exterior shear key design for bridge abutments with skews ≤ 20°~~. Equations 7.8.4.1A-2 – 7.8.4.1A-4 (i.e., Non-isolated shear key method) are based on the interface shear transfer - shear friction provisions of LRFD BDS. Figure ~~7.16~~ 7.8.4.1-1 shows typical reinforcing details for abutment shear keys designed using both methods.

A) Vertical Shear Key Reinforcement

For the Isolated key design method, the required area of interface shear reinforcement crossing the shear plane, A_{sk} is given by Equation ~~7.48~~ 7.8.4.1A-1.

$$A_{sk} = \frac{F_{sk}}{1.8 \times f_{ye}} \qquad \text{Isolated shear key} \qquad \text{~~7.48~~ 7.8.4.1A-1}$$

The shear key vertical reinforcement provided above should be placed in a single line parallel to the bridge, and as close as possible to the center of the key, transversely (see Figure ~~7.16~~ 7.8.4.1-1A).

If the Non-isolated key or Shear-friction design method is used, A_{sk}, is given by (see Figure ~~7.16~~ 7.8.4.1-1B):

$$A_{sk} = \frac{1}{1.4 \times f_{ye}}\left(F_{sk} - 0.4 \times A_{cv}\right) \qquad \text{Non-isolated shear key} \qquad \text{~~7.49~~ 7.8.4.1A-2}$$

in which:

$$\cancel{A_{cv} \geq \max\begin{cases} \dfrac{4.0 \times F_{sk}}{f'_{ce}} \\ 0.67 \times F_{sk} \end{cases}} \qquad 0.4 \times A_{cv} < F_{sk} \leq \min\begin{pmatrix} 0.25 \times f'_{ce} A_{cv} \\ 1.5 \times A_{cv} \end{pmatrix} \qquad \text{~~7.50~~ 7.8.4.1A-3}$$

$$\cancel{A_{sk,\min} = \frac{0.05 \times A_{cv}}{f_{ye}}} \qquad A_{sk} \geq \frac{0.05 \times A_{cv}}{f_{ye}} \qquad \text{~~7.51~~ 7.8.4.1A-4}$$

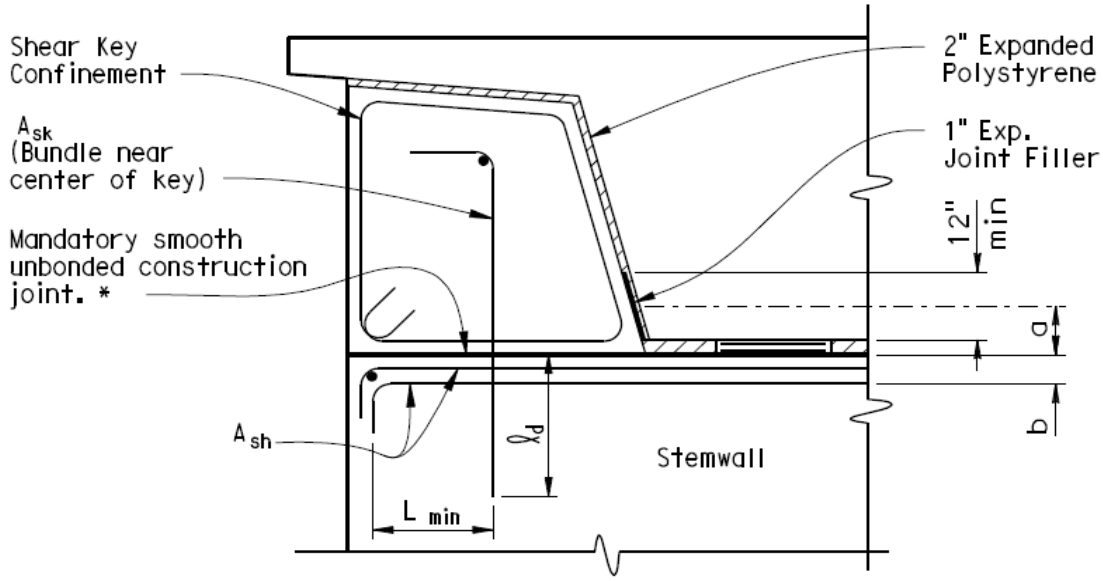

* Smooth construction joint is required at the shear key interfaces with the stemwall and backwall to effectively isolate the key except for specifically designed reinforcement. These interfaces should be trowel-finished smooth before application of a bond breaker such as construction paper. ~~It is not recommended to use~~ ~~f~~Form oil shall not be used as a bond breaker for this purpose.

(A) Isolated shear key

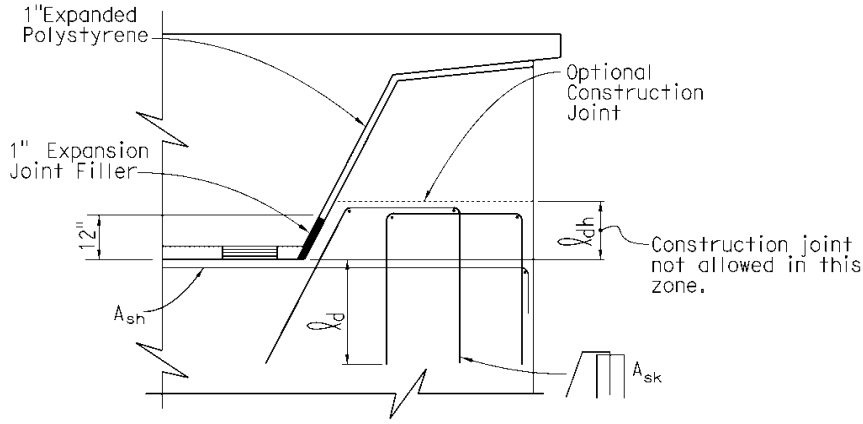

(B) Non-isolated shear key

NOTES:

(a) Not all shear key bars shown

(b) On high skews, use 2" expanded polystyrene with 1" expanded polystyrene over the 1" expansion joint filler to prevent binding on post-tensioned bridges.

Figure ~~7.16~~ 7.8.4.1-1 Abutment Shear key Reinforcement Details

where:

A_{cv} = Area of concrete ~~considered to be~~ engaged in interface shear transfer ~~(in~~

~~$A_{sk,\min}$ = Minimum area of interface shear reinforcement (in^2)~~

If the Non-isolated key Equation 7.8.4.1A-3 cannot be satisfied, the key shall be isolated and designed using the Isolated shear key method.

In Equations ~~7.48~~ 7.8.4.1A-1 – ~~7.51~~ 7.8.4.1A-4, f_{ye} and f'_{ce} have units of ksi, A_{cv} and A_{sk} are in in^2, and F_{sk} is in kips~~, and A_{sk} is in in^2~~.

Due to development length requirements, it is recommended that vertical shear key reinforcement be no larger than #11 bars. If the height of the shear key is not adequate to develop straight bars, hooks or T-heads may be used.

The concrete shear key block should be well confined to ensure shear failure of the vertical key reinforcement instead of deterioration of the key block itself.

B) Horizontal Reinforcement in the Stem wall (Hanger bars)

The horizontal reinforcement in the stem wall below the shear key shall be designed to carry the shear key force elastically. The required area of horizontal reinforcement in the stem wall, A_{sh} is given by Equations ~~7.52~~ 7.8.4.1B-1 and ~~7.53~~ 7.8.4.1B-2 for Isolated and Non-isolated shear keys, respectively.

$$A_{sh} = 2.0 \times A_{sk(provided)}^{Iso} \qquad \text{Isolated shear key} \qquad (\cancel{7.52}\ 7.8.4.1B\text{-}1)$$

$$A_{sh} = \max\begin{cases} 2.0 \times A_{sk(provided)}^{Non-iso} \\ \dfrac{F_{sk}}{f_{ye}} \end{cases} \qquad \text{Non-isolated shear key} \qquad (\cancel{7.53}\ 7.8.4.1B\text{-}2)$$

where:

$A_{sk(provided)}^{Iso}$ = Area of interface shear reinforcement provided in Equation ~~7.48~~ 7.8.4.1A-1for Isolated shear key

$A_{sk(provided)}^{Non-iso}$ = Area of interface shear reinforcement provided in Equation ~~7.49~~ 7.8.4.1A-2 for non-isolated shear key

Horizontal stem wall tension reinforcement can be provided using headed bars or standard hooked hanger bars. "T" heads should be considered in place of large radius hooks. A minimum length, $L_{\min}$ measured horizontally from the end of the hook or enlarged head, as applicable, of the lowest layer of hooked bars or headed bars to the intersection with the shear key vertical reinforcement, should be provided (see Figure 7.8.4.1-1A). $L_{\min}$ (measured in inches) for standard hooked hanger bars and headed bars are given in Equations 7.8.4.1B-3 and 7.8.4.1B-4, respectively.

$$L_{\min,hooked} = 0.6 \times (a+b) + l_{dh} \qquad (7.8.4.1B\text{-}3)$$

$$L_{\min,headed} = 0.6 \times (a+b) + 3in \qquad (7.8.4.1B\text{-}4)$$

where:

a = Vertical distance from the location of the applied force on the shear key to the top surface of the stem wall, taken as one half the vertical length of the expansion joint filler plus the pad thickness (see Figure 7.8.4.1-1A)

b = Vertical distance from the top surface of the stem wall to the centroid of the lowest layer of shear key horizontal reinforcement

l_{dh} = Development length in tension of standard hooked bars as specified in LRFD BDS

In situations where limited space prevents placement of the required shear key reinforcement, the design engineer must use judgment. Such situations may occur due to non-standard overhangs, high skews, and retrofit conditions at widenings.

Wide bridges may require internal shear keys to ensure adequate lateral resistance is available for service load and moderate earthquakes. Internal shear keys should be avoided whenever possible because of maintenance problems associated with premature failure caused by binding due to superstructure rotation or shortening.

8.1.1 No-Splice ~~Regions~~ Zones in Ductile/Seismic-critical ~~Components~~ Members

Splicing of main flexural reinforcement is not permitted in critical ~~locations~~ regions of ductile/seismic-critical ~~elements~~ members (see Section 3.1.1). These critical regions are called "No-Splice Zones" and shall correspond to the plastic hinge region defined in Section 7.6.3. ~~The "no splice" region shall be the greater of: The length of the plastic hinge region as defined in Section 7.6.3 or the portion of the column where the moment demand exceeds M_y.~~

~~A~~ ~~"no~~ No-~~s~~Splice~~"~~ ~~region~~ Zones shall be clearly identified on the plans ~~for both hinge locations of fixed-fixed columns~~.

For relatively long columns where the required length of No-Splice Zone plus the required length of longitudinal reinforcement embedment into footings, type II shafts, pile caps and bent caps, as applicable, is greater than the length of commercially available reinforcement (subject to a minimum length of 60 ft), an ultimate splice shall be permitted in the plastic hinge region. The splice shall be located as close as possible to the allowable splice zone and shown on the plans. The transverse reinforcement shall have the same spacing throughout the required length of No-Splice Zone.

8.1.2 Reinforcement Spliced in Ductile/Seismic-critical Members ~~Components & Components Expected to Accept Damage~~

~~Reinforcing steel splices in~~ Splicing of main flexural reinforcement outside of the No-Splice Zone of ductile/seismic-critical members ~~components~~ ~~outside of the "no-splice" region~~ shall meet the "ultimate splice" performance requirements identified in MTD 20-9.

Splicing of main flexural reinforcement shall not be allowed if the flexural reinforcement in the ductile/seismic-critical member can be placed with a single length of commercially available steel (subject to a minimum length of 60 ft).

8.1.4 Hoop and Spiral Reinforcement Splices

Ultimate splices are required for all ~~spiral and~~ hoop reinforcement in ductile components. Splicing of spiral reinforcement in ductile components shall be in accordance with Section 3.8.2 and MTD 20-9. ~~is not permitted in the "no splice" regions of ductile components as defined in Section 8.1.1. Spiral splicing outside the "no splice" regions of ductile components shall meet the ultimate splice requirements.~~

8.2.1 Minimum Development Length of Column Longitudinal Bars into Cap Beams for Seismic Considerations

Column longitudinal reinforcement shall be extended into cap beams as close as practically possible to the ~~opposite face~~ top surface of the cap beam.

~~If the joint shear reinforcement prescribed in Section 7.4.4.2, and the minimum bar spacing requirements in Section 8.2.5 and AASHTO LRFD Articles 5.10.3.1 and 5.10.3.2 are met, the anchorage for longitudinal column bars developed into the cap beam for seismic loads shall not be less than the length specified in Equation 8.1[1]:~~

Straight column longitudinal bars shall extend into cap beams for at least the length specified in Equation 8.2.1-1. The development length given by Equation 8.2.1-1 shall be multiplied by a factor of 1.2 if epoxy-coated column longitudinal bars are used. Equation 8.2.1-1 was based on experimental investigations on full-scale column-cap beam joints [19, 20] coupled with engineering judgment and other studies [7, 21, 22].

$$l_{ac} = 24 d_{bl} \qquad \text{(in, or mm)} \qquad (\cancel{8.1}\ 8.2.1\text{-}1)$$

While it is expected that the use of "T" heads or hooked bar termination will reduce the anchorage requirement specified in Equation 8.2.1-1, no such reduction, except as provided herein, shall be permitted until definitive test data on these bar terminations become available. An exception to the foregoing development length requirement shall be made in the case of slab bridges, where the provisions of MTD 20-7 shall govern. Any other exception to the provisions of this section shall be obtained using the procedure documented in MTD 20-11.

~~The anchorage length specified in Equation 8.1 was based on test data on straight column longitudinal bars extended into the cap beam. and therefore should not be reduced by adding hooks or mechanical anchorage devices.~~

~~The reinforcing development requirements in other Caltrans documents must be met for all load cases other than seismic. Note that the minimum development length of column longitudinal bars into footings is governed by the reinforcing development provisions in other Caltrans documents.~~

The column longitudinal reinforcement shall be confined along the development length, l_{ac} by transverse hoops or spirals with the same volumetric ratio as that required at the top of the column. If the joint region is not confined by adjacent solid members or prestressing, the volumetric ratio, ρ_s of the confinement along l_{ac} shall not be less than the value specified ~~by~~ in Equation ~~8.2~~ 8.2.1-2.

$$\cancel{\rho_s = \frac{0.6 \times \rho_l \times D_c}{l_{ac}}} \qquad \rho_s = \frac{0.76 A_{st}}{D_c l_{ac}} \qquad (\cancel{8.2}\ 8.2.1\text{-}2)$$

where:

D_c = Diameter or depth of column in the direction of loading

A_{st} = Total area of column longitudinal reinforcement anchored in the joint.

APPENDIX B - DESIGN SPECTRUM DEVELOPMENT

California Seismic Hazard

Seismic hazard in California is governed by shallow crustal tectonics, with the sole exception of the Cascadia subduction zone along California's northern coastline. In both regimes, the Design Response Spectrum is based on the envelope of a deterministic and probabilistic spectrum. Instructions for the determination of these spectra, including the application of appropriate adjustment factors, are provided in the sections below.

Deterministic Criteria

Shallow crustal tectonics (all faults other than Cascadia subduction zone)

The deterministic spectrum is calculated as the arithmetic average of median response spectra calculated using the Campbell-Bozorgnia (2008) and Chiou-Youngs (2008) ground motion prediction equations (GMPE's). These equations are applied to all faults in or near California considered to be active in the last 700,000 years (late Quaternary age) and capable of producing a moment magnitude earthquake of 6.0 or greater. In application of these ground motion prediction equations, the earthquake magnitude should be set to the maximum moment magnitude ~~M_{max},~~ **M**Max, as recommended by California Geological Survey (1997, 2005). Recommended fault parameters, including ~~M_{max},~~ **M**Max, are provided in the ~~*"2007 Fault Database"* (http://dap3.dot.ca.gov/shake_stable/references/2007_Fault_Database_120309.xls). Updates to these parameters along with additions or deletions to the database of considered faults can be found at *"Errata Report"* (http://dap3.dot.ca.gov/shake_stable/Errata_Report_120309.pdf)~~ spreadsheet *"2012 Caltrans Fault Database"* available in the Technical References link of the ARS Online V2 website (http://dap3.dot.ca.gov/shake_stable/v2/).

Multi-fault Hazard

In cases where more than one fault contributes maximum spectral values across the period spectrum, an envelope of the spectral values shall be used for the design spectrum.

Eastern California Shear Zone

The Eastern California Shear Zone is a region of distributed shear and complex faulting that makes identification of potential seismic sources challenging. To account for this uncertainty, a minimum response spectrum based on a strike-slip mechanism with moment magnitude **M** 7.6 and a distance to the vertical rupture

plane of 10 km (6.2 miles) is imposed. This minimum spectrum is shown for several V_{S30} values in Figure B.1. The Eastern California Shear Zone is shown in Figure B.2.

Cascadia Subduction Zone

Following the general approach of the USGS (Frankel, 2002), the deterministic spectrum for the Cascadia subduction zone is defined by the median spectrum from the Youngs et al. (1997) ground motion prediction equation, with the added criterion that where the Youngs et al. spectrum is less than the average of the Campbell-Bozorgnia (2008) and Chiou-Youngs (2008) models (both without the hanging wall term applied), an arithmetic average of the Youngs et al. and CB-CY average is used.

Minimum Deterministic Spectrum

In recognition of the potential for earthquakes to occur on previously unknown faults, a minimum deterministic spectrum is imposed statewide. This minimum spectrum is defined as the average of the median predictions of Campbell-Bozorgnia (2008) and Chiou-Youngs (2008) for a scenario **M** 6.5 vertical strike-slip event occurring at a distance of 12 km (7.5 miles). While this scenario establishes the minimum spectrum, the spectrum is intended to represent the possibility of a wide range of magnitude-distance scenarios. Although a rupture distance of 12 km strictly meets the criteria for application of a directivity adjustment factor, application of this factor to the minimum spectrum is NOT recommended.

Probabilistic Criteria

The probabilistic spectrum is obtained from the (2008) USGS Seismic Hazard Map (Petersen, 2008) for the 5% in 50 years probability of exceedance (or 975 year return period). Since the USGS Seismic Hazard Map spectral values are published only for V_{S30} = 760m/s, soil amplification factors must be applied for other site conditions. The site amplification factors shall be based on an average of those derived from the Boore-Atkinson (2008), Campbell-Bozorgnia (2008), and Chiou-Youngs (2008) ground motion prediction models (the same models used for the development of the USGS map).

Spectrum Adjustment Factors

The design spectrum may need to be modified to account for seismological effects related to being in close proximity to a rupturing fault and/or placement on top of a deep sedimentary basin. These adjustments are discussed in the following sections.

Near-Fault Factor

Sites located near a rupturing fault may experience elevated levels of shaking at periods longer than 0.5-

second due to phenomena such as constructive wave interference, radiation pattern effects, and static fault offset (fling). As a practical matter, these phenomena are commonly combined into a single "near-fault" adjustment factor. This adjustment factor, shown in Figure B.3, is fully applied at locations with a site to rupture plane distance (R_{Rup}) of 15 km (9.4 miles) or less and linearly tapered to zero adjustment at 25 km (15.6 miles). The adjustment consists of a 20% increase in spectral values with corresponding period longer than one second. This increase is linearly tapered to zero at a period of 0.5-second.

For application to a probabilistic spectrum, a deaggregation of the site hazard should be performed to determine whether the "probabilistic" distance is less than 25 km. The "probabilistic" distance shall be calculated as the smaller of the mean distance and the mode distance (from the peak R, M bin), but not less than the site to rupture plane distance corresponding to the nearest fault in the Caltrans Fault Database. This latter requirement reflects the intention not to apply a near-fault adjustment factor to a background seismic source used in the probabilistic seismic hazard analysis.

Basin Factor

Both the Campbell-Bozorgnia (2008) and Chiou-Youngs (2008) ground motion prediction models include a depth to rock (Z) parameter that allows each model to better predict ground motion in regions with deep sedimentary structure. The two models use different reference velocities for rock, with Campbell-Bozorgnia using a depth to 2.5 km/s shear wave velocity ($Z_{2.5}$) and Chiou-Youngs using a depth to 1.0 km/s shear wave velocity ($Z_{1.0}$). Numerical models suggest that ground shaking in sedimentary basins is impacted by phenomena such as trapped surface waves, constructive and destructive interference, amplifications at the basin edge, and heightened 1-D soil amplification due to a greater depth of soil. Since neither the Campbell-Bozorgnia nor Chiou-Youngs models consider these phenomena explicitly, it is more accurate to refer to predicted amplification due to the Z parameter as a "depth to rock" effect instead of a basin effect. However, since sites with large depth to rock are located in basin structures the term "basin effect" is commonly used.

Amplification factors for the two models are shown for various depths to rock in Figure B.4. These plots assume a V_{S30} of 270 m/s (typical for many basin locations) but are suitable for other V_{S30} values as well since the basin effect is only slightly sensitive to V_{S30} (primarily at periods less than 0.5 second). It should be noted that both models predict a decrease in long period energy for cases of shallow rock ($Z_{2.5}$ < 1 km or $Z_{1.0}$ < 40 m). Since $Z_{2.5}$ and $Z_{1.0}$ data are generally unavailable at non-basin locations, implementation of the basin amplification factors is restricted to locations with $Z_{2.5}$ larger than 3 km or $Z_{1.0}$ larger than 400 m.

Maps of $Z_{1.0}$ and $Z_{2.5}$

Figures B.5 through B.11 show contour maps of $Z_{1.0}$ and $Z_{2.5}$ for regions with sufficient depth to rock to trigger basin amplification. In Southern California, these maps were generated using data from the Community Velocity Model (CVM) Version 4 (~~http://www.data.scec.org/3Dvelocity/~~ http://scec.usc.edu/scecpedia/Community_Velocity_Model). In Northern California, the $Z_{2.5}$ contour map was generated using tomography data by Thurber (2009) and a generalized velocity profile by Brocher (2005). Details of the contour map development are provided in the *"Deterministic PGA Map and ARS Online Report" (http://dap3.dot.ca.gov/shake_stable/references/Deterministic_PGA_Map_and_ARS_Online_Report_071409.pdf).* A $Z_{1.0}$ contour map could not be created in Northern California due to insufficient data.

Application of the models

For Southern California locations, an average of the Campbell-Bozorgnia and Chiou-Youngs basin amplification factors is applied to both the deterministic and probabilistic spectra. For Northern California locations, only the Campbell-Bozorgnia basin amplification factor is applied.

Directional Orientation of Design Spectrum

When recorded horizontal components of earthquake ground motion are mathematically rotated to different orientations, the corresponding response spectrum changes as well. Both the deterministic and probabilistic spectra defined above reflect a spectrum that is equally probable in all orientations. The maximum response spectrum, occurring at a specific but unpredictable orientation, is approximately 15% to 25% larger than the equally probable spectrum calculated using the procedures described above. Since a narrow range of directional orientations typically define the critical loading direction for bridge structures, the equally probable component spectrum is used for design.

Selection of V_{S30} for Site Amplification

The Campbell-Bozorgnia (2008), Chiou-Youngs (2008), and Boore-Atkinson (2008) ground motion prediction models (the latter is included for application to the probabilistic spectrum) use the parameter V_{S30} to characterize near surface soil stiffness as well as infer broader site characteristics. V_{S30} represents the average small strain shear wave velocity in the upper 100 feet (30 meters) of the soil column. This parameter, along with the level of ground shaking, determines the estimated site amplification in each of the above models. If the shear wave velocity (V_S) is known (or estimated) for discrete soil layers, then V_{S30} can be calculated as follows:

$$V_{s30} = \frac{100\ ft}{\frac{D_1}{V_1} + \frac{D_2}{V_2} + \ldots + \frac{D_n}{V_n}}$$

where, D_n represents the thickness of layer n (ft), V_n represents the shear wave velocity of layer n (fps), and the sum of the layer depths equals 100 feet. It is recommended that direct shear wave velocity measurements be used, or, in the absence of available field measurements, correlations to available parameters such as undrained shear strength, cone penetration tip resistance, or standard penetration test blow counts be utilized. Additional recommendations pertaining to determination of V_{S30} for development of the preliminary and final design spectrum are given in ~~*"Geotechnical Services Design Manual"* (http://dap3.dot.ca.gov/shake_stable/references/GS_Design_Manual_081209.pdf)~~ *"Methodology for Developing Design Response Spectra"* available in the Technical References link of the ARS Online V2 website (http://dap3.dot.ca.gov/shake_stable/v2/).

Figure B.12 provides a profile classification system that is published in Applied Technology Council–32 (1996) and was adopted in previous versions of SDC. This table includes general guidance on average shear wave velocity that may be useful for development of a preliminary design spectrum. Acceleration and displacement response spectra at V_{S30} values corresponding to the center of the velocity ranges designated for soil profile types B, C, and D are provided at several magnitudes in Figures B.13 - B.24. The data for these curves can be found in the *"Preliminary Spectral Curves Data"* spreadsheet (http://dap3.dot.ca.gov/shake_stable/references/ Preliminary_Spectral_Curves_Data_073009.xls).

The Campbell-Bozorgnia and Chiou-Youngs ground motion prediction equations are applicable for V_{S30} ranging from 150 m/s (500 fps) to 1500 m/s (5000 fps). For cases where V_{S30} exceeds 1500 m/s (very rare in California), a value of 1500 m/s should be used. For cases where either (1) V_{S30} is less than 150 m/s, (2) one or more layers of at least ~~five (~~5~~)~~ feet thickness has a shear wave velocity less than 120 m/s, or (3) the profile conforms to Soil Profile Type E criteria per Figure B.12, a site-specific response analysis is required for determination of the final design spectrum.

For cases where the site meets the criteria prescribed for Soil Profile Type E, the response spectra presented in Figures B.25 - B.27, originally presented in ATC-32, can be used for development of a preliminary design spectrum. In most cases, however, Type E spectra will significantly exceed spectra developed using site response analysis methods. For this reason it is preferred that a site response analysis be performed for the determination of the preliminary design spectrum in Type E soils.

When a soil profile meets the criteria prescribed for Soil Profile Type F (in Figure B.12), a site response analysis is required for both preliminary and final design.

References

- Applied Technology Council, 1996, Improved Seismic Design Criteria for California Bridges: Resource Document, Publication 32-1, Redwood City, California.
- Boore, D., and Atkinson, G., 2008, Ground-motion prediction equations for the average horizontal component of PGA, PGV, and 5%-damped PSA at spectral periods between 0.01 s and 10.0 s: Earthquake Spectra, Vol. 24, pp. 99 - 138.
- Brocher, T., M, 2005, A regional view of urban sedimentary basins in Northern California based on oil industry compressional-wave velocity and density logs: Bull. Seism. Soc. Am., ~~v.~~Vol. 95, 2093-2114.
- California Geological Survey (CGS), 2005, Bryant, W.A. (compiler), Digital Database of Quaternary and Younger Faults from the Fault Activity Map of California, Version 2.0 (July 2005): http://www.consrv.ca.gov/CGS/information/publications/QuaternaryFaults_ver2.htm
- California Geological Survey (CGS), 1997 (rev.2008), Guidelines for evaluating and mitigating seismic hazards in California: Special Publication 117, 74 pp. http://www.conservation.ca.gov/cgs/shzp/webdocs/Documents/sp117.pdf
- Campbell, K., and Bozorgnia, Y., 2008, NGA ground motion model for the geometric mean horizontal component of PGA, PGV, PGD, and 5% damped linear elastic response spectra for periods ranging from 0.01 to 10 s.: Earthquake Spectra, Vol. 24, pp. 139 - 172.
- Chiou, B., and Youngs, R., 2008, An NGA model for the average horizontal component of peak ground motion and response spectra: Earthquake Spectra, Vol. 24, pp. 173-216
- Frankel, A.D., Petersen, M.D., Mueller, C.S., Haller, K.M.,Wheeler, R.L., Leyendecker, E.V., Wesson, R.L., Harmsen,S.C., Cramer, C.H., Perkins, D.M., Rukstales, K.S., 2002, Documentation for the 2002 update of the National SeismicHazard Maps: U.S. Geological Survey Open-File Report 2002–420, 39 p.
- ~~Magistrale, H., S. Day, R.Clayton, and R. Graves, 2000, The SCEC Southern California reference three-dimensional seismic velocity model version 2, Bulletin Seismological Society of America, 90 (6B), S65-S76.~~
- Petersen, Mark D., Frankel, Arthur D., Harmsen, Stephen C., Mueller, Charles S., Haller, Kathleen M., Wheeler, Russell L., Wesson, Robert L., Zeng, Yuehua, Boyd, Oliver S., Perkins, David M., Luco, Nicolas, Field, Edward H., Wills, Chris J., and Rukstales, Kenneth S., 2008, Documentation for the 2008 Update of the United States National Seismic Hazard Maps: U.S. Geological Survey Open-File Report 2008–1128, 61 p.

- Shantz, T., Merriam, M., 2009, Development of the Caltrans Deterministic PGA Map and Caltrans ARS Online, http://dap3.dot.ca.gov/shake_stable/references/Deterministic_PGA_Map_and_ARS_Online_Report_071409.pdf
- Southern California Basin Models (Community Velocity Model V.4) ~~http://www.data.scec.org/3Dvelocity/~~ http://scec.usc.edu/scecpedia/Community_Velocity_Model
- Thurber, C., Zhang, H., Brocher, T., and Langenheim, V., 2009, Regional three-dimensional seismic velocity model of the crust and uppermost mantle of northern California: *J. Geophys. Res.*, 114, B01304.pp.
- USGS Probabilistic Seismic Hazard Analysis http://earthquake.usgs.gov/research/hazmaps/
- ~~Youngs, R.R., S.J. Chiou, W.J. Silva, and J.R. Humphrey (1997). Strong ground motion attenuation relationships for subduction zone earthquakes, *Seism. Res. Letts.*, v. 68, no. 1, pp. 58 - 73.~~
- Youngs, R.R., Chiou, S.J., Silva W.J., and Humphrey, J.R., 1997, Strong ground motion attenuation relationships for subduction zone earthquakes, *Seism. Res. Letts.*, Vol. 68, no. 1, pp. 58 - 73.

APPENDIX C - BIBLIOGRAPHY

1. Housner, G.W. - Chairman, Seismic Advisory Board (1994). *"The Continuing Challenge."* Report to the Director, California Department of Transportation on the 1994 Northridge Earthquake, Seismic Advisory Board, Sacramento, California.

2. ATC (1996). *"ATC-32: Improved Seismic Design Criteria for California Bridges: Provisional Recommendations."* Applied Technology Council, Report ATC-32, Redwood City, California.

3. Caltrans (Various dates). *"Bridge Memo to Designers (MTD)."* California Department of Transportation, Sacramento, California.

4. Seyed-Mahan, M. (1996). *"Procedures in Seismic Analysis and Design of Bridge Structures, Release II Draft."* Caltrans Division of Structures, California Department of Transportation, Sacramento, California.

5. Caltrans (1997). "*Seismic Design Criteria Retrofit of the West Approach to the San Francisco-Oakland Bay Bridge Draft #14*." California Department of Transportation, Sacramento, California.

6. Park, R., and Paulay, T. (1975). "*Reinforced Concrete Structures*." John Wiley & Sons, New York, NY.

7. Priestley, M.J.N., Seible, F., and Calvi, G.M. (1996). "*Seismic Design and Retrofit of Bridges*." John Wiley & Sons, New York, NY.

8. Priestley, M.J.N., and Seible, F. (1991). "*Seismic Assessment and Retrofit of Bridges*." Structural Systems Research Project, Report SSRP-91/03, University of California San Diego, CA.

9. Rinne, E.E. (1994). "*Development of New Site Coefficient of Building Codes*." Proceedings of the Fifth U.S. National Conference on Earthquake Engineering, Vol. III, pp. 69 -78, Earthquake Engineering Research Institute, Oakland, California.

10. Martin, G. R., and Dobry, R. (1994). "*Earthquake Site Response and Seismic Code Provisions*." NCEER Bulletin, Vol. 8, No. 4, National Center for Earthquake Engineering Research, Buffalo, NY.

11. BSSC (1994). "*NEHRP Provisions*." 1994 Edition, Building Seismic Safety Council, Washington, D.C.

12. AASHTO (2007). "*AASHTO LRFD Bridge Design Specifications*." 4th Edition, American Association of State Highway and Transportation Officials, Washington, D.C.

13. Maroney, B.H. (1995). "*Large Scale Abutment Tests to Determine Stiffness and Ultimate Strength Under Seismic Loading*." Ph.D. Dissertation, University of California, Davis, CA.

14. Caltrans (2011). "*California Amendments to the AASHTO LRFD Bridge Design Specifications." 4th Edition*, California Department of Transportation, Sacramento, CA, November 2011.

15. Shamsabadi, A. (2007). "*Three-Dimensional Nonlinear Seismic Soil-Abutment-Foundation Structure Interaction Analysis of Skewed Bridges."* Ph.D. Dissertation, Department of Civil and Environmental Engineering, University of Southern California, Los Angeles, CA.

16. Stewart, P.S., Taciroglu, E., Wallace, J.W., Ahlberg, E.R., Lemnitzer, A., Rha, C., and Tehrani, P.K. (2007). "*Full Scale Cyclic Testing of Foundation Support Systems for Highway Bridges, Part II: Abutment Backwalls*." Report No. UCLA-SGEL 2007/02 conducted under Caltrans Grant No. 59A0247, Department of Civil and Environmental Engineering, University of California, Los Angeles, CA.

17. Shamsabadi, A., Rollins, K.M., and Kapuskar, M. (2007). "*Nonlinear Soil-Abutment-Bridge Structure Interaction for Seismic Performance-based Design*." J. Geotech. & Geoenviron. Eng., ASCE, 133 (6), 707-720.

18. Bozorgzadeh, A., Megally, S.H., Ashford, S., and Restrepo, J.I. (2007). "*Seismic Response of Sacrificial Exterior Shear Keys in Bridge Abutments*." Final Report Submitted to the California Department of Transportation Under Contract No. 59A0337, Department of Structural Engineering, University of California, San Diego, La Jolla, CA.

19. Seible, F., Priestley, M.J.N., Silva, P., and Gee, D. (1994a). "*Full-scale Bridge Column Test of Redesigned Cap/Column Connection with # 18 Column Bars*." Test Report No. TR-94/01, Charles Lee Powell Structural Research Laboratories, University of California, San Diego, CA, January 1994.

20. Seible, F., Priestley, M.J.N., Latham, C.T., and Silva, P. (1994b). "*Full-scale Bridge Column/Superstructure Connection Tests Under Simulated Longitudinal Seismic Loads*." Structural Systems Research Project, Report SSRP-94/14, University of California, San Diego, CA, June 1994.

21. Unanwa, C.O., and Mahan, M. (2012). "*A Reevaluation of Provisions for Minimum Development Length of Column Longitudinal Bars Extended into Cap Beams*." General Earthquake Engineering Report, California Department of Transportation, Sacramento, CA.

22. Unanwa, C. and Mahan, M. (2012). *"Statistical Analysis of Concrete Compressive Strengths for California Highway Bridges."* Journal of Performance of Constructed Facilities, 10.1061/(ASCE)CF. 1943-5509.0000404 (September 22, 2012).

23. Menun, C. and Der Kiureghian, A. (1998). *"A Replacement for the 30 %, 40 %, and SRSS Rules for Multicomponent Seismic Analysis*." Earthquake Spectra, Vol. 14, No. 1, 153 - 163.