STATE OF CALIFORNIA
EXHIBIT 11.31, CLASS A, B, C & E
BUS, PARATRANSIT QUESTIONNAIRE

23-19TQ2

NOTES: The bidder shall complete this questionnaire in full for each proposed product and shall submit all questionnaires with the bid. (Bidders will need to make copies of this form if more than one vehicle Class or fuel system is offered.)

Name of bidder: Creative Bus Sales, Inc. Date: Revised 8/17/2016

Name of Bus Manufacturer: Starcraft Bus

Bus Manufacturer ISO 9001(latest) certified: Yes: X No:_____

Vehicle Class: A:_____ B:_____ C: X E:_____

Fuel Type: CNG: X Diesel:___ Gas: ____

Bus Year, Make and Model: 2016 Starcraft Allstar

Chassis Year, Make & Model: 2016 Ford E-450

Bus Model ALTOONA Tested: Yes: X No:_____ Pending:_____

Bus Model Rollover Tested (FMVSS 220): Yes: X No:_____

Is Altoona Test report available on Altoona website, Yes: X, No: ___ altoonabustest.psu.edu/buses/333

Note: A report from the Federal Transit Administration (FTA) that matches the Make/Model on this questionnaire or a web link to the Altoona testing web site that matches on the Make/Model on this questionnaire shall be included in the bid as Exhibit 11.28, Altoona Bus Testing.

The sections referred to in this questionnaire correspond to specification 2310-3075 (Class A, B, C) and 2310-3082 (Class E) see below:

3.1.		
What is the number of wheelchair positions?	2	each
What is the number of ambulatory passenger (track mounted) seat positions for "rear lift" bus?	16	each
What is the Gross Vehicle Weight Rating (GVWR)?	14,500	pounds
What is the chassis wheelbase?	190"	inches
What is the "clear" front entrance door height?	79"	inches
What is the "clear" front entrance door width for bus?	30"	inches
What is the engine HP and Torque? Horse Power Torque	305 420	HP lb-ft
3.5 Is the Engine certified by CARB to operate on Highway in State of California? Engine family name: FLDRE06.8B10, CARB certificate Should be provided.	Yes X	No _____

3.8 Does the ground load rating of the front and rear springs equal or exceed the GVWR of the vehicle? Front: Rear:	Yes X 5,000 9,600	No _____ pounds pounds
3.13 Is the chassis equipped with seven OEM, steel-belted, radial-ply tires of equal size and rating with the combined load rating of the tires equal or exceeding the GVWR of the vehicle? Tire Size: LT 225/75 R16 Tire Load Rating: E	Yes X 2,680 Single 2,470 Dual	No _____ pounds
3.14 Is the chassis equipped with an OEM front bumper? Is the chassis equipped with an energy absorbing rear bumper with a reverse assistance system integrated into the bumper? Bumper Brand/Model: Romeo RIM Reverse Assistance Sys Brand/Model: Intermotive Hawkeye *Bidder should submit descriptive literature (unless the reference Brand/Model is bid)*	Yes X Yes X Yes X	No _____ No _____ No _____
3.15 What is the Gross Axle Weight Rating (GAWR)? Front Axle Rear Axle	5,000 9,600	pounds pounds
3.16 Is protective metal guard for drive shaft provided?	Yes X	No _____
3.18 Is the vehicle equipped with two rearview mirrors? What is the brand and model of mirror? Velvac 2020SS	Yes X	No _____
3.19 Is the bus equipped with a 12-volt electrical system compliant to section 3.19?	_____ Yes X	No _____
3.19.2 What is the alternator voltage? Is the bus equipped with a fast idle system? Brand/Model: Intermotive Gateway #505-F	225 Amps / 12v Yes X	volts No _____
3.19.3 Is the bus equipped with Light-Emitting Diode (LED) lights compliant to section 3.19.3. Brand/Model: Optronics LED	Yes X	No _____
3.19.4 Is bus equipped with additional lights requirements compliant to section 3.19.4?	Yes X	No _____
3.19.5 Is the bus equipped with two maximum-capacity chassis OEM batteries? Rating #1 750 CCA, #2 750 CCA	Yes X	No ____
3.19.6 Is the bus equipped with a locking, weather-protected, sliding-type battery tray compliant to section 3.19.6?	Yes X	No ____
3.20 What is the size of the fuel tank? Is fuel tank compliant with CARB standards?	29gge Yes X	Gallons No ____

3.23 Is the bus equipped with a back-up alarm compliant to section 3.21 Brand/Model: Ecco 575 *Bidder should submit descriptive literature (unless the reference Brand/Model is bid)*	Yes X	No _____
3.26 Is the seating compliant to section 3.26? What is the Make and Name/Number of the vinyl seat material? Docket 90 Vinyl (Freedman Level 4) **e)** What is the hip to knee spacing? **f)** What is the aisle spacing? **h)** Is the bus equipped with passenger seats in compliance with Section 3.26h. *Bidder should submit descriptive literature (unless the reference Brand/Model is bid)*	Yes X 27" Min 16" Yes X	No _____ inches inches No _____
i) Is the bus equipped with a driver seat in compliance with Section 3.26i Brand/Model: Recaro SHS *Bidder should submit descriptive literature (unless the reference Brand/Model is bid)*	Yes X	No _____
3.27 What is the thickness of the plywood? Is the floor surface covered with minimum 2.2 millimeter thick, highly resilient PVC flooring in compliance with section 3.27? Brand/Model: Altro Translfor **3.27** Is the flooring installation and adhesion compliant with Section? **3.27** What type of flooring adhesive will be provided on the bus? Brand/Model: Natcon Spider Glue / Nitro *Bidder should submit descriptive literature (unless the reference Brand/Model is bid)*	5/8" Yes X Yes X	Inches No _____ No _____
3.28 Is the bus equipped with rear emergency window compliant with Section 3.28?	Yes X	No _____
3.29 Is the bus equipped with an electric front entrance door compliant to section 3.29? Brand/Model: A&M Systems / Electric *Bidder should submit descriptive literature (unless the reference Brand/Model is bid)*	Yes X	No _____
3.30 Is the bus equipped with entry steps compliant to section 3.30? What are the step dimensions (Step riser height X Depth)? What is the dimension of the bottom step tread from the ground unloaded? Are steps vertical? If not, what is the usable step area?	Yes X 9" x 11.25" 12" Max Yes X _____	No _____ inches inches No _____ inches

3.31 Is the bus equipped with a driver's side running board compliant to section 3.31? What is the depth of the running board?	Yes X 12"	No _____ inches
3.32 What type of material is used to fabricate the handrails? Material What is the length of the handrail?	Stainless Steel 30" Min	inches
3.35 Is the bus equipped with insulation compliant to section 3.35?	Yes X	No _____
3.37 Is the bus equipped with an exterior front one piece cap compliant to section 3.37?	Yes X	No _____
3.38 Is the bus equipped with an undercoating compliant to section 3.38? Brand/Model: BASF Degacoat	Yes X	No _____
3.39 Is wheel housings made of minimum 14 Gauge galvanized steel or stainless steel compliant to section 3.39?	Yes X	No _____
3.40 Is the bus equipped with an OEM integral front air conditioner and An auxiliary rear air conditioner compliant to section 3.40? What is the auxiliary rear air conditioner output? Make/Model Trans Air TA733 Super 13 / #16 Suction *Bidder should submit descriptive literature.*	Yes X 43,367	No _____ SAE BTU
3.41 Is the bus equipped with front-mounted, integral high-output heater and a rear floor high-output auxiliary heater mounted behind the rear wheel housing or under a rear fixed seat compliant to section 3.41? Class A auxiliary heater:_____BTU, Make/Model: _____ Class B and C auxiliary heater : 65,000 BTU, Make/Model Pro-Air 465 Class E Auxiliary Heater:_____BTU, Make/Model _____ *Bidder should submit descriptive literature.*	Yes X	No _____
3.42 Is the bus equipped with a mobility aid lift compliant to section 3.42? Brand/Model: Braun Century NCL919FIBHB-2 *Bidder should submit descriptive literature.*	Yes X	No _____
3.43 Is the bus equipped with controls for the lift that interlock with Emergency brakes and transmission compliant to section 3.43? Brand/Model: Intermotive Gateway #505-F	Yes X	No _____
3.44 Is the bus equipped with side lift entry doors compliant to section 3.44?	Yes X	No _____
3.45 Is the bus equipped with a device to prevent starting the vehicle in neutral? Brand/Model: Intermotive PCOM 501B Bidder should submit descriptive literature (unless the reference Brand/Model is bid)	Yes X	No _____

3.46 Is the bus equipped with mobility aid security and occupant restraint systems compliant to section 3.46? Brand/Model: Q'Straint QRT-360	Yes X	No _____
3.47 Is web cutter provided compliant to section 3.47a?	Yes X	No _____
Is torso pad provided compliant to section 3.47b?	Yes X	No _____
Is closeable box provided compliant to section 3.47c1?	Yes X	No _____
Is Secured container provided for storage of straps, pads etc. Compliant to section 3.47c2?	Yes X	No _____
3.48 Is 5 lb fire extinguisher provided compliant to section 3.48a?	Yes X	No _____
Is 16-unit First aid kit provided compliant to section 3.48b?	Yes X	No _____
Is reflective triangles provided compliant to section 3.48c?	Yes X	No _____
Is bus equipped with a passenger viewing mirror compliant to section 3.48d?	Yes X	No _____
Brand/Model: Rosco 609 *Bidder should submit descriptive literature for mirror (unless the Reference Brand/Model is bid).*	Yes X	No _____
Is bus equipped with a two-way antenna prep compliant to section 3.48e?	Yes X	No _____
Is blood borne pathogen kit provided compliant to section3.48f?		
Is retractable coat hook provided compliant to section 3.48g?		
3.50 What is the CNG tank capacity (total)?	29gge	GGE
Does fuel tank comply with FMVSS 304 and ANSI NGV2-2007	Yes X	No _____
Manufacturer of CNG conversion: Landi Renzo USA Installer of CNG conversion: GAS / Creative Bus Sales		
Is CNG conversion system approved by CARB?	Yes X	No _____

Class B & C - CNG

California Environmental Protection Agency
eJt Air Resources Board

LANDI RENZO USA

EXECUTIVE ORDER A-400-0018
New On-Road Heavy-Duty Engines

Pursuant to the authority vested in the Air Resources Board by Health and Safety Code Division 26, Part 5, Chapter 2; and pursuant to the authority vested in the undersigned by Health and Safety Code Sections 39515 and 39516 and Executive Order G-14-012;

IT **IS ORDERED AND RESOLVED:** The engine and emission control systems produced by the manufacturer are certified as described below for use in on-road motor vehicles with a manufacturer's GWVR over 14,000 pounds. Production engines shall be in all material respects the same as those for which certification is granted.

MODEL YEAR	ENGINE FAMILY	ENGINE SIZES (L)	FUEL TYPE [1]	STANDARDS & TEST PROCEDURE	INTENDED SERVICi CLASS	ECS & :SPECIAL FEATURES [3]	DIAGNOSTIC [6]
2015	FLDRE06.8B10	6.8	CNG	Otto	HOO	SFI, H02S, TVVC, 2AFS	EMO+

PRIMARY ENGINE'S IDLj EMISSIONS CONTROL	ADDITIONAL IDLE EMISSIONS CONTROL [5]
NIA	*NIA*

ENGINE (L)	ENGINE MODELS / CODES (rated power, in hp)
6.8	E450 Incomplete / DE418N05, DE418M05, (224 for all codes)

• =not applicable; GVWR=gross vehicle weight rating; 13 CCR xyz=Title 13, California Code of Regulations, Section xyz; 40 CFR 86.abc=Title 40, Code of Federal Regulations, Section 86.abc; L=liter; hp=horsepower; kw=kilowatt; hr=hour;

[1] CNG/LNG=compressed/liquefied natural gas; LPG=liquefied petroleum gas; **E85=85%** ethanol fuel; MF=multi fuel a.k.a. BF=bi fuel; DF=dual fuel; FF=flexible fuel;

[2] **UM/H** HDD=light/medium/heavy heavy-duty diesel; UB=urban bus; HDO=heavy duty Otto;

[3] ECS=emission control system; TWC/OC=three-way/oxidizing catalyst; **NAC=NOx** adsorption catalyst; **SCR-U**/SCR-N=selective catalytic reduction-urea/-ammonia; **WU (prefix)** =warm-up catalyst; DPF=diesel particulate filter; PTOX=periodic trap oxidizer; H02S/02S=heated/oxygen sensor; HAFS/AFS=heated/air-fuel-ratio sensor (a.k.a., universal or linear oxygen sensor); TBI=throttle body fuel injection; SFI/MFI=sequential/multi port fuel injection; DGI=direct gasoline injection; GCARB=gaseous carburetor; IDI/DDI=indirect/direct diesel injection; TC/SC=turbo/super charger; CAC=charge air cooler; EGR / EGR-C=exhaust gas recirculation / cooled EGR; PAIR/AIR=pulsed/secondary air injection; SPL=smoke puff limiter; ECM/PCM=engine/powertrain jontrol module; EM=engirie modification; 2 (prefix)=parallel; **(2)** (suffix)=in series; **AMOX :** ammonia oxidation catalyst .

ESS=engine shutdown system (per 13 CCR 1956.8(a)(6)(A)(1); 30g=30 g/hr NOx (per 13 CCR 1956.B(a)(S)(C); **APS** =internal combustion auxiliary power system; ALT=alternative method er 13 CCR 1956.B(a)(S)(D); Exempt=exempted per 13 CCR 1956.B(a)(S)(B) or for CNG/LNG fuel systems; N/A=not applicable (e.g., Otto engines and vehicles);

EMD=engine manufacturer diagnostic system (13 CCR 1971); 0BD(F)/(P)/($)=full/ partial/ partial with fine/ on-board diagnostic.

Following are: 1) the FTP exhaust emission standards, or family emission limit(s) as applicable, under 13 CCR 1956.8; 2) the SET and NTE limits under the applicable California exhaust emission standards and test procedures for heavy-duty diesel engines and vehicles (Test Procedures); and 3) the corresponding certification levels, for this engine family. "Diesel" CO, SET and NTE certification compliance may have been demonstrated by the manufacturer as provided under the applicable Test Procedures in lieu of testing. (For flexible- and dual-fueled engines, the CERT values in brackets [J are those when tested on.fOnventional test fuel. For multi-fueled engines, the STD and CERT values for default operation permitted in 13 CCR 1956.8 are in parentheses.).

in g/bhp-hr	NMHC		NOx		NMHC+NOx		CO		PM		HCHO	
	FTP	SET	FTP	SET	FTP	SET	FTP	SET	FTP	SET	FTP	SET
STD	0.14	*	0.20	*	*	*	14.4	*	0.01	*	0.01	*
CERT	0.003	*	0.08	*	*	*	**2.2**	*	0.002	*	0.001	*
NTE	*		*		*		*		*		*	

[4] g/bhp-hr=grams per brake horsepower-hour; FTP=Federal Test Procedure; SET= supplemental emissions testing; **NTE=** Not-to-Exceed; STD=standard or emission test cap; FEL=family emission limit; CERT=certification level; NMHC/HC=non-methane/hydrocarbon; **NOx=oxides** of nitrooen; CO=carbon monoxide; PM=particulate matter; HCHO=formaldehyde;

BE IT **FURTHER RESOLVED:** For the listed engine models the manufacturer has submitted the materials to demonstrate certification compliance with 13 CCR 1965 (emission control labels), 13 CCR 1971 (engine manufacturer diagnostic), and 13 CCR 2035 et seq. (emission control warranty).

Engines certified under this Executive Order must conform to all applicable California emission regulations.

The Bureau of Automotive Repair will be notified by copy of this Executive Order.

Executed at El Monte, California on this /d)Jb. day of January 2015.

Qc!PivVvc/

Annette Hebert, Chief
ISSIONS Compliance, Automotive Regulations and Science Division

Trans/Air

CalTrans CLASS C System Components

TA733 Super 13 #16 Suction

TA73 Evaporator
P/N 2022072-28

SMC3L Condenser
P/N 301795-04

Compressor | Engine Mount & Drive Kit
P/N 512236 13 CID Compressor,
P/N 4013524-02 Compressor Mount Kit,
P/N 4012708 Alternator Mount Kit

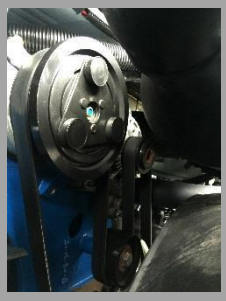

Basic II PCB Controls
P/N 5031451

SAE-J2064 Hose & Fitting System
P/N 5031475 Fitting Kit, P/N 311026 #8 Hose,
P/N 311027 #10 Hose, P/N 311034 #16 Hose

Trans/Air

CalTrans CLASS C System Specifications

TA733 Super 13 #16 Suction

System BTU/hr (without dash): 43K SAE / 68K IMACA
Dash unit: 15K SAE / 24K IMACA
System BTU/hr (with dash): 58K SAE / 92K IMACA

A complete Trans/Air system consisting of (1) TA73 Evaporator, (1) SMC3L Skirt Mount Condenser, and (1) 13 cid Compressor with #16 suction line, installed separately from the OEM chassis compressor & dash evaporator with Basic Controls and a Trans/Air supplied mount kit.

Quality System: Trans/Air Manufacturing is registered to ISO 9001:2008 by an accredited auditor.

Evaporator:	**TA73**
Capacity:	43,367 (SAE) to 68,449 (IMACA) Btu/hr
Cooling Coil:	Advanced aluminum fins on 3/8" internally enhanced copper tubing
Expansion Valve:	Externally equalized thermostatic type
Blower Assembly:	(2) blowers each with double wheels and dual inlets
Total Blower Air Flow:	1480 ft^3/min @ 0 Static (2515 m^3/hr @ 0 Static)
Motors:	High performance double shaft, permanent magnet
Amperage:	16.9 A @ 13.5 Vdc / 8.5 A @ 27 Vdc
Housing:	Galvannealed steel with aluminum or ABS cover
Specification:	All interior components shall meet FMVSS 302 for fire retardant specifications

Condenser:	**SMC3L Microchannel** (Skirt Mount)
Capacity:	71,325 (SAE) to 87,175 (IMACA) Btu/hr
Condenser Coil:	Aluminum microchannel (488 in^2 face area)
Fan Assembly:	(3) low profile, surface mounted 10 in diameter fans
Motor Type:	Closed, permanent magnet w/ball bearings
Amperage:	31.0 A @ 13.5 Vdc / 15.5 A @ 27 Vdc
Total Fan Air Flow:	2745 ft^3/min @ 0 static (4664 m^3/hr @ 0 Static)
Filter Drier:	16 in^3, R-134A compatible
Sight Glass:	At back of coil
Cond Housing:	Powder-coated galvannealed steel

Electrical Controls:	**Basic II**
Fan Controls:	3 speed rotary switch @ driver
Temp Controls:	Rotary manual switch @ driver
Protection:	Fused main power distribution with individually fused motor.
Wiring:	Color, number and or function coded every six inches in fire retardant loom.
Specification:	All wiring automotive standard per SAE J1292 electrical specifications.

Hose/Fittings:	**Trans/Air SAE J2064:**
Fittings:	Steel with corrosion resistive coating, (2) grooves, and stainless steel clips.
Hose:	Type C with Butyl cover, Poly-amide barrier, rubber lining.
Specification:	Exceeds SAE J2064 hose fitting integrity specification.

Compressor:	**13 CID**
Protection:	High/low pressure switches.
Specification:	Mounts shall meet SAE J637 belt alignment specifications.

Warranty:	**3 years**
Mileage:	Unlimited
Inception:	Date of in-service
Coverage:	All components and installation if installation is provided by Trans/Air.

Trans/Air

CalTrans CLASS C System Service Parts List

TA733 Super 13 #16 Suction

Evaporator	**2022072-28**	**Evaporator, TA73 - Lines Left, w/o Heat, Gray**
	412032	Blower Assy, 12V
	210042	Expansion Valve, 4 Ton
	2021365	Coil Assembly, Evaporator (includes 210042 Expansion Valve)
	111164	Resistor, .6 Ohm, 3 Tap
	111154	Switch, High Pressure
	111155	Switch, Low Pressure
	915045	Filter, Air Inlet
	413012	Louver
	110043	Fuse, ATC-20, Blade Type
	413015	Deflector, Air
Condenser	**301795-04**	**SMC3L Condenser**
	301712	Coil, Condenser, 3-Fan, Micro Channel
	2160088	Fan Assembly, 10" Puller, 12V
	212021	Filter Drier w/Sight Glass
	301799-01	Screen Assy, 3-Fan, Black
	110050-15	Fuse, Mini, 15 Amp
Hose & Fittings	**5031475**	**Piping for #16 hose**
	311026	Hose, #8, Refrigerant
	311027	Hose, #10, Refrigerant
	311034	Hose, #16, Refrigerant
	313703	Fitting, Clip-Lok, 90˚, 5/8 F.O. x #16 Hose
	313687	Fitting, Clip-Lok, 90˚, 3/4 FO x #16 Hose
	313689	Fitting, Clip-Lok, Splice, Inline Access, #16 Hose
	313511	Fitting, Clip-Lok, 90°, 1/2 FO x #8 Hose
	313520	Fitting, Clip-Lok, Splice Incline Access #10
	313510	Fitting, Clip-Lok, 90°, 5/8 FO x #10 Hose
	313509	Fitting, Clip-Lok, 90°, 1/2 FO x #10 Hose
Electrical & Cable	**5031451**	**Basic II PCB Electrical**
	701567	Relay Board Assembly, Basic II PCB, Mate-N-Lok Connector
	701401	Fuse Holder Assy, MIDI, Bolt-On, 40A
	610008	Knob, Black, ABS, Wht Pointer, .250 Spring Index Position 1
	111051	Thermostat, Rotary
	113006	Switch, Rotary, 4 Position
Compressor	**512236**	**Compressor, QP21, 13CID, 127MM, 8 Grv, 12V**
Engine Mount & Drive Kit	**4013524-02**	**Mount Kit, 6.8L Ford Cutaway, 13 CID**
	7155061360	Belt, Poly-V, 6K Groove, 136.0" OEL
	31987606	Hose, 90°, 5/8 x 3/4 x 25" Lg
	711048	Idler Pulley, 6K Groove, 76MM Pitch
	711041	Idler, Backside, Dia 76MM
	4012675	Mount Bracket, Ford 6.8L Cutaway

CalTrans CLASS C Fitting Kit Schematic (1of 1)

5031475 1

NOTES, (INSTALLATION)

1. 0-RING FITT1NGS TO BE TORQUED ACCORDING TO CHART BELOW.
2. INSTALL CUP-LOK FITTINGS PER TRANS/AIR PROCEDURE NO. 002397.
3. COMPLETE INFORMATION ON ITEM 14 (LABEL) AFTER CHARGING PROCEDURE.
4. USE ITEMS 9, 10, t 1, &: 12 FOR SECURING HOSES &: HARNESS TO CHASSIS.
5. WRAP SUCTION LINE FITTINGS WITH ITEM 13 (NO DRIP).
6. MUST USE CRIMP TOOL, P/N 8 I6176 FOR CRIMPING CUP-LOK FIITINGS.

O PLACE ITEM 15 (IMPRINTED HEAT SHRINK TUBING) OVER SERVICE VALVE AND USE HEAT GUN TO SHRINK TUBING AROUND VALVE.

NOTES, (PACKAGING)

1. PLACE AI ITEMS INTO BOX WITH A COPY OF THIS DRAWING ANO IDENTIFY WITH PART NO. AND REV LEVEL.

REV		
I – IINITIAL RELEASE PER ECN14204 1 11110m111	BGC	
I A ISEE ECN14205	I 11/1J/2rn I	BGC

FTG TORQUE REQUIREMENTS	
3/8 fTG	I 11-13 FT-LBS.
1/2 FTG	I 15-20 FT-LBS.
5/8 FTG	I 21–27 FT–LBS.
3/4 FTG	I 28–33 FT–LBS.

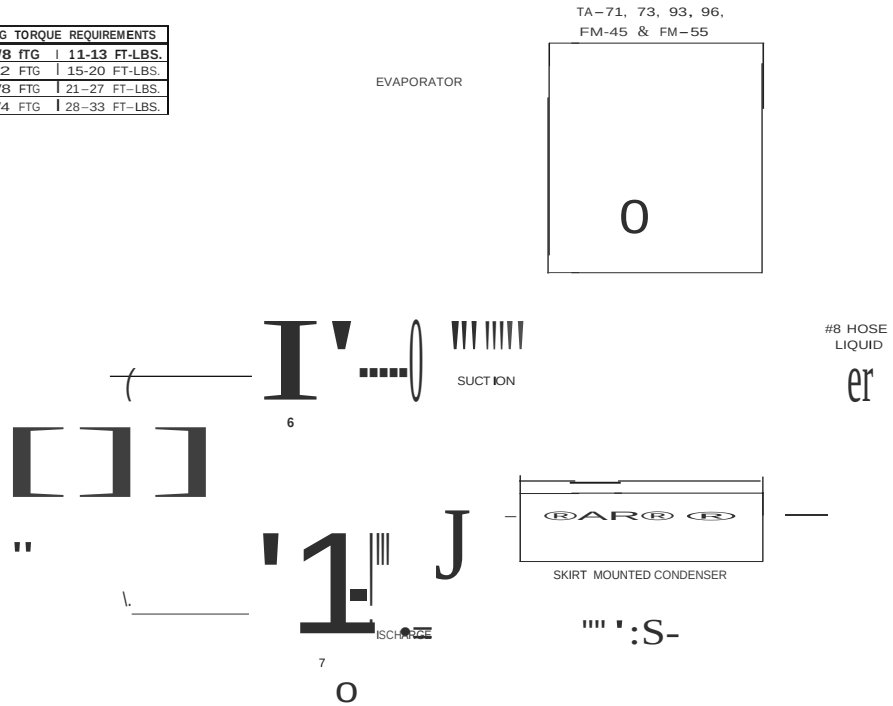

QTY	REQ	PART NO.		
1		002397	PROCEDURES, TRANS/AIR CLIP-LOK	16
2		119027	TUBING, HEAT SHRINK, BLUE, IMPRINTED	:;
I		916023	LABEL, R–134A, CHARGE/CAUTION	
24		810002	NO DRIP	13
24		117004	TY-WRAP 15'	12
24		117002	TY-WRAP 14	11
16		619066	SCREW, SELF TAP, N14 X 3/4	10
16		611027	CLAMP, 2" INSULATED	9
				8
1		313520	FTG CLIP-LOK SPL. HIO HOSE X R134A SV HS	7
1		313689	FTG, CLIP-LOK, SPL. H16 HOSE X R134A SV, LS	6
2		313511	FTG, CLIP-LOK, 90°, 1/2 FD. X 8 HOSE	5
1		313667	FTG, CUP-LOK, 90-, 3/4 F.O. X 16 HOSE	4
I		313510	FTG CUP-LOK 90- 5/8 F.O. X 10 HOSE	3
1		313703	FTG, CLIP-LOK, 90', 5/8 F.O. X 16 HOSE	2
1		313509	FTG, CLIP-LOK, 90' I/2 F.O. X 10 HOSE	1

PARTS LIST

MATERIAL:

000-$111-100

TRANS/ AIR MFG CORP

PIPING INSTALLATION, R134A
(1) EVAP, (1) COND, (1) COMP

16 SUCTION HOSE, # 10 COMP
SUCTION FTG, TRANS/AIR CLIP–LOK

5031475

CalTrans CLASS C Basic II PCB Controls Schematic (1 of 3)

DWG NO. 5031451 SH 1

REV	DESCRIPTION	DATE	APPROVED
–	INITIAL RELEASE PER ECN14098	5/27/2014	BGC
A	SEE ECN 14126	7/10/2014	BGC
B	SEE ECN 15188	11/20/2015	SRL

CONTROL BOARD INSTALLATION NOTES:

1. LOCATE THE BASIC II CONTROL BOARD INSIDE THE VEHICLE OR IN AN ENCLOSED ELECTRICAL COMPARTMENT. DO NOT LOCATE EXTERNAL TO THE VEHICLE, IN A LOCATION WHERE IT IS EXPOSED TO MOISTURE, OR IN THE ENGINE COMPARTMENT OR OTHER AREA WHERE IT WILL BE EXPOSED TO TEMPERATURES AT OR EXCEEDING 130°F (55°C). MARK AND DRILL HOLES USING A DRILL TEMPLATE.
   DO NOT USE CONTROL BOARD ASSEMBLY AS A DRILL TEMPLATE.
2. LOCATE POWER FUSES WITHIN 4 FT OF POWER SOURCE AND BEFORE PASSING THROUGH ANY PARTITIONS. FUSES LOCATED ELSEWHERE MUST BE PRE-APPROVED BY TRANS/AIR ENGINEERING DEPARTMENT.

GENERAL INSTALLATION NOTES:

3. REFER TO BOARD CONNECTION DETAIL BEFORE MAKING ANY WIRE CONNECTIONS TO BOARD.
4. USE ONLY BATTERY OR ALTERNATOR POSITIVE POST OR ADEQUATE OEM-PROVIDED STUD FOR POWER PICK-UP POINT. WHEN USING OEM-PROVIDED STUD, VERIFY OEM FEEDER TO STUD AND ANY CIRCUIT PROTECTION UPSTREAM OF STUD ARE SIZED SUFFICIENTLY FOR ADDED A/C LOAD.
5. SECURE ALL WIRES AND CABLES TO MINIMIZE WIRE STRAIN AT CONTROL BOARD AND FUSE CONNECTIONS.
6. GROUND TO CHASSIS AT CLOSEST POINT TO MINIMIZE VOLTAGE DROP.
7. USE ITEMS 16 AND 19 TO SECURE HARNESS AT RELAY BOARD.
8. USE ITEMS 17 AND 19 TO SECURE HARNESS AT RELAY BOARD.
9. SEE CONNECTOR DETAILS ON SHEET 3.

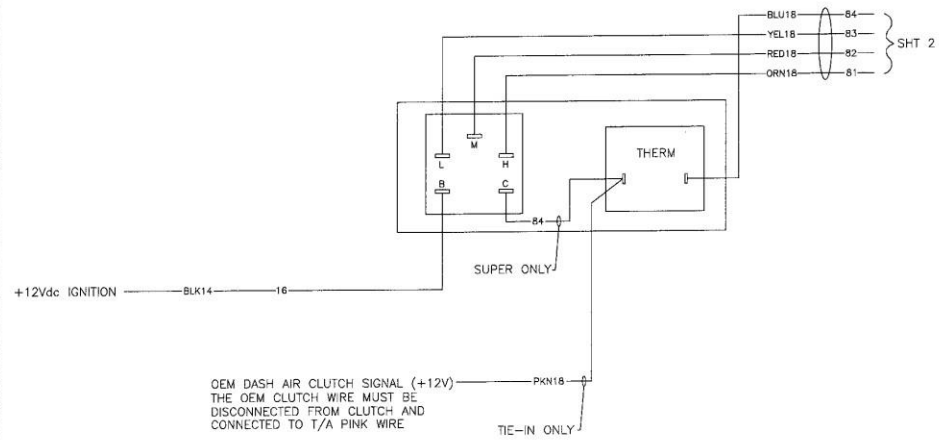

QTY REQD PER ASSY	FSCM NO.	PART NO.	DESCRIPTION	MATERIAL / SPECIFICATION	ITEM NO.
1		701451	WIRE, GROUND		32
2		812009	SEAL, CABLE, 14 GA		31
2		120039	SECONDARY LOCK, TERM POSITION ASSURANCE		30
1		120038	CONNECTOR, FEMALE, SEALED, 1 POSITION		29
1		120037	CONNECTOR, MALE, SEALED, 1 POSITION		28
1		115169	TERMINAL, FEMALE, 14–16 GA, SEALED		27
1		115168	TERMINAL, MALE, 14–16 GA, SEALED		26
2		701401	FUSE HOLDER ASSEMBLY, MIDI, BOLT-ON		25
4		115003	TERMINAL, #10 RING, 8 GA		24
1		701567	RELAY BOARD ASSEMBLY		23
					22
1		115064	CLAMP, CABLE STRAIN RELIEF, AMP		21
1		115191	RECEPTACLE, AMP, FREE-HANGING		20
14		619021	SCREW, #10 SELF TAP		19
4		619125	SCREW, PAN HD, #6 X 5/8", SELF DRILL		18
5		611045	CLAMP, INSULATED, .38 ID		17
5		611026	CLAMP, INSULATED, .75 ID		16
					15
6		115016	TERMINAL, #10 RING 10–12 GA		14
2		115004	TERMINAL, 5/16 RING, 8 GA		13
1		115001	TERMINAL, #10 RING, 14–16 GA		12
					11
2		115051	TERMINAL, MALE, AMP, 8–10		10
1		701447	HARNESS, EVAPORATOR		9
1		701445	HARNESS, CONDENSER, SEALED		8
1		701446	HARNESS, POWER		7
3		115050	TERMINAL, MALE, AMP, 12–14 GA		6
1		813042	PLUG, CONNECTOR CAVITY		5
2		812008	SEAL, CABLE, 10 GA		4
2		115151	TERMINAL, MALE, SEALED, 10–12 GA		3
1		120036	SECONDARY LOCK, TERMINAL POSITION ASSURANCE		2
1		120034	CONNECTOR, MALE, SEALED, 3 POS		1

PARTS LIST

UNLESS OTHERWISE SPECIFIED: DIMENSIONS ARE IN INCHES
TOLERANCES ON DECIMALS
2PL ± 3PL ± ANGLE ±

INTERPRET DRAWING PER DOD-STD-100
REMOVE BURRS AND SHARP EDGES
DO NOT SCALE DRAWING

MATERIAL:

NEXT ASSY | USED ON
APPLICATION

DRAWN BY BGC DATE 5/27/2014
CHECKER JMH DATE 11/25/15
DRAWING APPROVAL JAS
DESIGN APPROVAL

TRANS/AIR MFC CORP

ELECTRICAL INSTALLATION
BASIC II PCB
STARCRAFT CALTRANS

SIZE D | CODE | DWG NO. 5031451 | REV B
SCALE NTS | SHEET 1 of 3

CalTrans CLASS C Basic II PCB Controls Schematic (2 of 3)

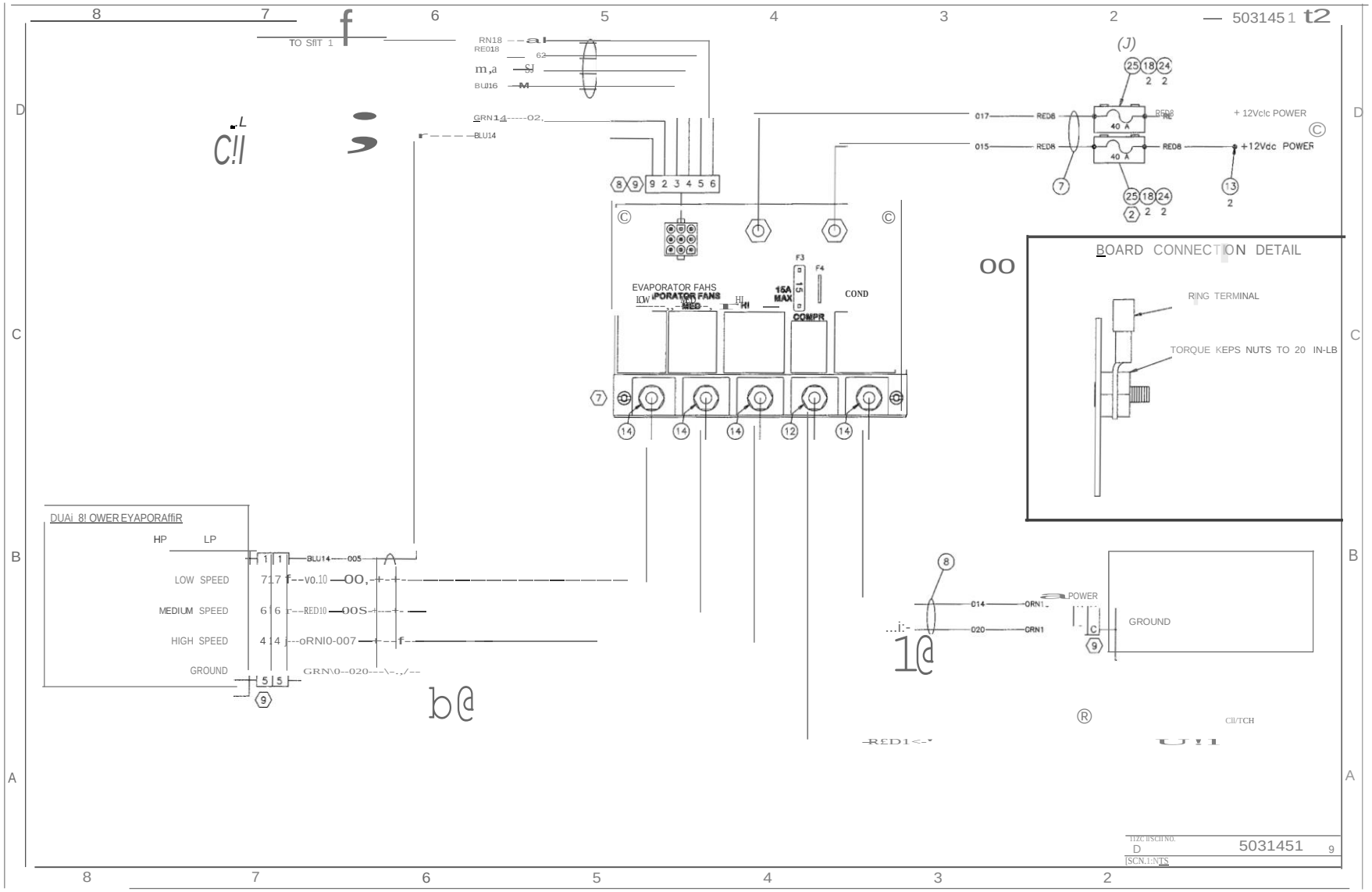

CalTrans CLASS C Basic II PCB Controls Schematic (3 of 3)

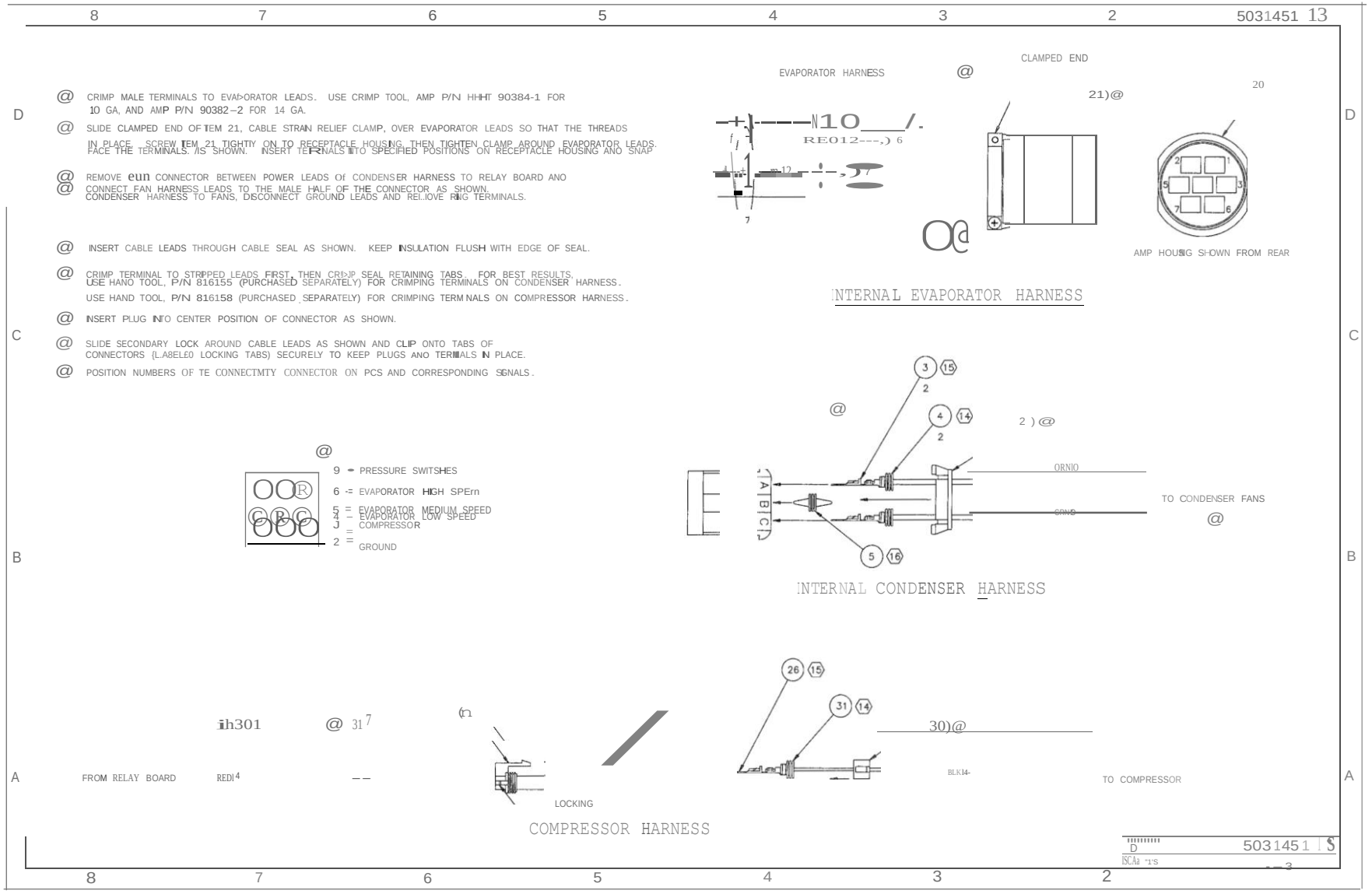

CalTrans CLASS C Engine Mount & Drive Kit (1 of 2)

DWG NO. 4013524 SH 1

REVISIONS			
REV.	DESCRIPTION	DATE	APPROVED
-	SEE ECR 15167	10/9/2015	DJF
A	ECR 16015	1/19/2016	DJF
B	ECN 16123	3/30/2016	DJF

NOTES:

1. DISCONNECT BATTERY.
2. DRAIN RADIATOR.
3. REMOVE AIR CLEANER AND INTAKE HOSE.
4. REMOVE OEM BELT AND OEM ALTERNATOR. SAVE HARDWARE AS IT MAY BE USED FOR NEW ALTERNATOR INSTALLATION.
5. MODIFY HEATER HOSES AS SHOWN WITH SUPPLIED HOSES AND FITTINGS. CUT OUT THE OEM TEE AND REPLACE WITH THE SUPPLIED FITTING. CUT BOTH SUPPLIED HOSES LEAVING APPROXIMATELY 1" OF STRAIGHT HOSE AFTER THE ELBOW. ATTACH WITH SUPPLIED CLAMP.
6. PUT LOOM ON HEATER HOSE AND SECURE WITH TYRAPS AS SHOWN.
7. INSTALL GROOVED IDLER USING INDICATED HARDWARE. IF INSTALLING KIT -02, REPLACE OEM IDLER WITH SUPPLIED BACKSIDE IDLER AS SHOWN. USE THREADLOCK.
8. INSTALL MOUNT USING INDICATED BOLTS AND WASHERS. USE THREADLOCK. USE CLAMP PROVIDED TO SECURE ALTERNATOR CABLE TO THE MOUNT TO PREVENT THE CABLE FROM BEING PINCHED BETWEEN THE MOUNT AND ANY ENGINE COMPONENTS AS SHOWN ON SHEET 2.
9. BOLT PLATE AND FITTINGS TO COMPRESSOR USING INDICATED BOLT AND WASHER. USE THREADLOCK. INSTALL SUCTION AND DISCHARGE HOSES.
10. LIGHTLY TAP DOWEL BUSHINGS INTO MOUNT. INSTALL COMPRESSOR USING INDICATED BOLTS AND WASHERS. USE THREADLOCK.
11. INSTALL ALTERNATOR ON MOUNT USING HARDWARE SUPPLIED IN ALTERNATOR MOUNT KIT. USE THREADLOCK.
12. INSTALL BELT IN REAR 6 GROOVES OF COMPRESSOR.
13. REINSTALL AIR CLEANER AND INTAKE HOSE.
14. APPLY BELT ROUTING LABEL TO ENGINE COMPARTMENT. THE SURFACE MUST BE VISIBLE AND FREE OF DIRT AND OIL.

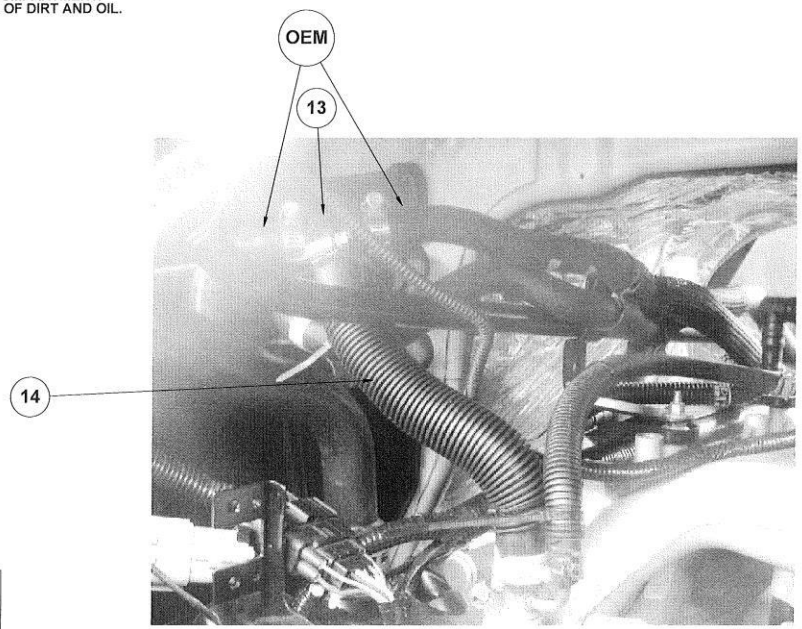

TORQUE SPECS
6mm GR8.8 - 7 ft-lb
6mm GR10.9 - 9 ft-lb
8mm GR8.8 - 18 ft-lb
8mm GR10.9 - 23 ft-lb
10mm GR8.8 - 30 ft-lb
10mm GR10.9 - 45 ft-lb
12mm GR8.8 - 55 ft-lb
12mm GR10.9 - 75 ft-lb
12mm GR12.9 - 95 ft-lb
.375"-16 GR5 - 30 ft-lb
.375"-16 GR8 - 40 ft-lb
.438"-14 GR5 - 45 ft-lb
.438"-14 GR8 - 65 ft-lb
.500"-20 GR5 - 75 ft-lb
.500"-20 GR8 - 110 ft-lb

-01: 10 CID
-02: 13 CID

-02	-01		PART NUMBER	DESCRIPTION	ITEM NO.
3	3		616483	BOLT, HEX HD FLANGE, M8-1.25 X 25MM GR10.9	27
1	1		616442	BOLT, HEX HD FLANGE, M10-1.50 X 50MM, GR10.9	26
3	3		616481	BOLT, HEX HD FLANGE, M10-1.50 X 25MM, GR10.9	25
3	3		616439	BOLT, HEX HD FLANGE, M8 X 1.25P X 100MM, GR 10.9	24
1	1		916178	LABEL, BELT ROUTING, FORD 5.4L	23
1	1		7155061360	BELT, POLY-V, 6K GROOVE, 136.0"	22
1	1		616384	BOLT, HEX HD FLANGE, M8 X 1.25P X 25MM, GR 8.8	21
1	1		618092	NUT, HEX FLANGE, LOCK, M8-1.25	20
1	1		611033	CLAMP, INSULATED, 1 - 1/4" ID	19
1	1		611063	CLAMP, SPRING HOSE, 1 1/16"	18
1	1		711035	BOLT W/ WASHER, HEX HD, 8MM X 1.25 X 1.41"	17
2	2		911009	THREADLOCK, REMOVABLE	16
4	4		117003	TYRAP, 3.75	15
1ft	1ft		119015	LOOM, PLASIC, 1.00", SLIT, HIGH TEMP	14
1	1		316111	FITTING, TEE, 5/8 X 5/8 X 5/8 BARB	13
1	1		31987606	HOSE, 90, 5/8" X 3/4" X 25"	12
3	3		611062	CLAMP, SPRING HOSE, 15/16"	11
1	1		711048	IDLER PULLEY, 6K-GROOVE, 76MM PITCH	10
2	1		711041	PULLEY, BACKSIDE, 76MM X 30.9MM WIDE	9
1	1		501262	PLATE, FITTING PAD	8
1	1		313455	FITTING, PAD BLOCK, STR, #10 MIO	7
1	1		313454	FITTING, PAD BLOCK, STR, #8 MIO	6
1	1		616449	BOLT, HEX HD FLANGE, M10-1.50 X 30MM, GR10.9	5
2	2		517068	BUSHING, DOWEL, 8MM X 13MM LONG	4
1	1		4013379	BUSHING, IDLER PULLEY, SINGLE 6303 BEARING	3
					2
1	1		4012675	MOUNT, FORD 5.4L CUTAWAY	1

QTY REQD PER ASSY — PARTS LIST

UNLESS OTHERWISE SPECIFIED: DIMENSIONS ARE IN INCHES
TOLERANCES ON: DECIMALS ±.03, 2PL ±.010, 3PL ±.005, ANGLE ±1°

INTERPRET DRAWING PER DOD-STD-100
REMOVE BURRS AND SHARP EDGES
DO NOT SCALE DRAWING

MATERIAL:

DRAWN BY DJF DATE 10/9/2015
CHECKER JM DATE 5/31/16
DRAWING APPROVAL SEA
DESIGN APPROVAL KA

TRANS/AIR MFG CORP

MOUNT KIT, FORD CUTAWAY

SIZE D CODE DWG NO. 4013524 REV B
SCALE 1:4 SHEET 1 OF 2

FINAL	
NEXT ASSY	USED ON
APPLICATION	
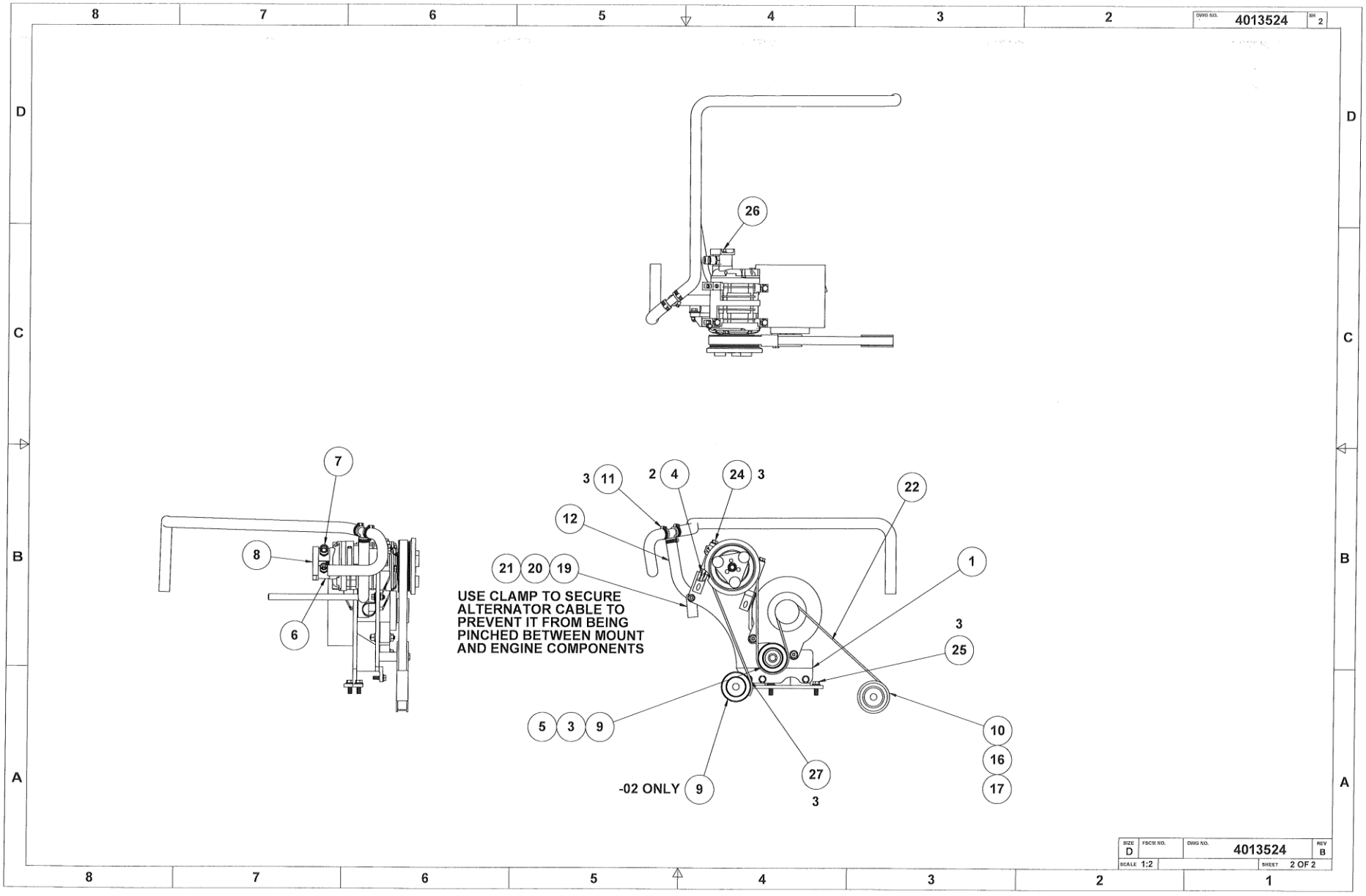
CalTrans CLASS C Engine Mount & Drive Kit (2 of 2)